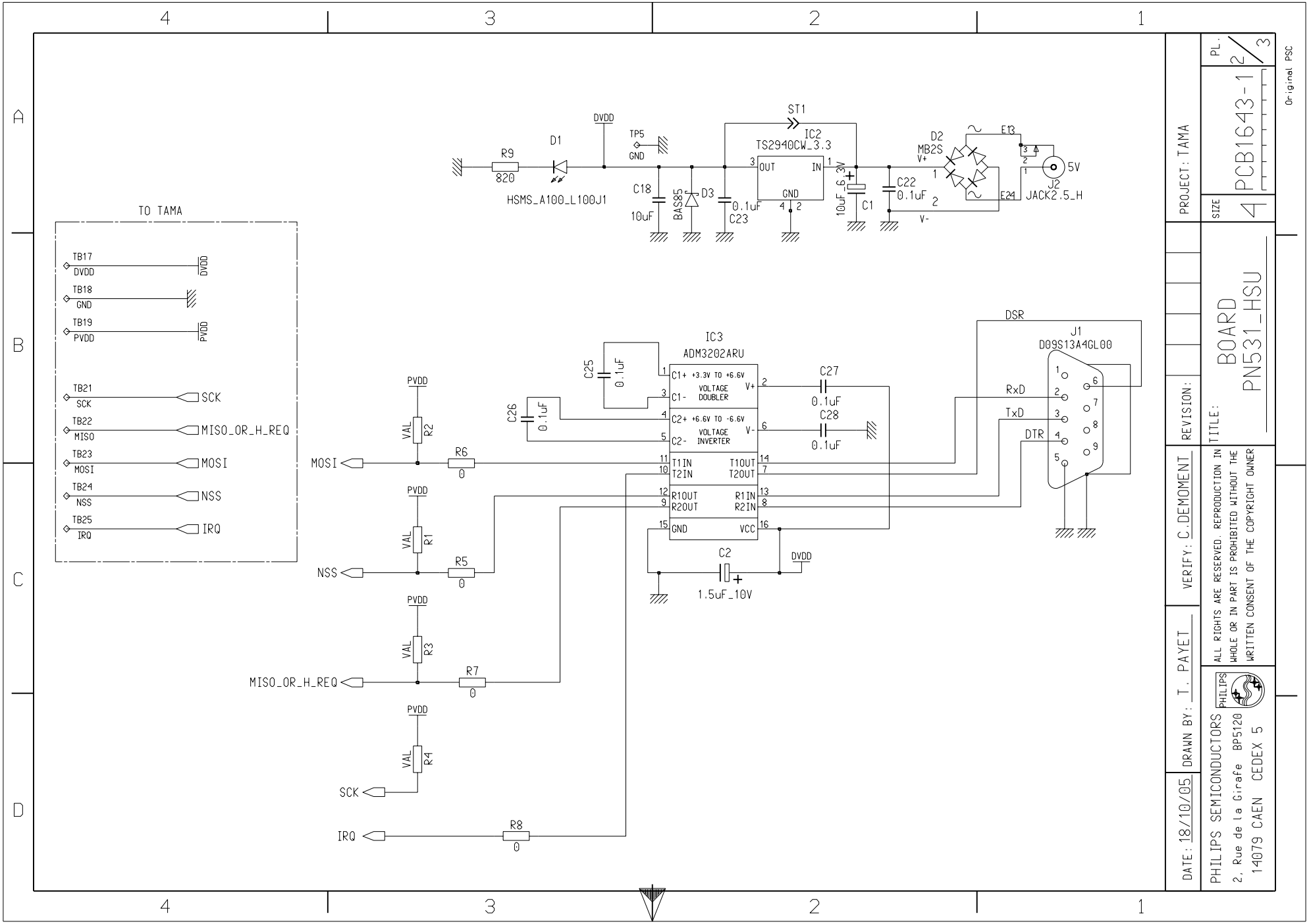
TO TAMA
TB17 DVDD
TB18 GND
TB19 PVDD
TB21 SCK
TB22 MISO
TB23 MOSI
TB24 NSS
TB25 IRQ
DVDD
PVDD
SCK
MISO_OR_H_REQ
MOSI
NSS
IRQ
R9 820
D1 HSMS_A100_L100J1
TP5 GND
C18 10uF
BAS85 D3
C23 0.1uF
ST1
IC2 TS2940CW_3.3
OUT IN GND
10uF_6.3V C1
C22 0.1uF
D2 MB2S
V+ V-
E13 E24
J2 JACK2.5_H
5V
IC3 ADM3202ARU
C1+ +3.3V TO +6.6V VOLTAGE DOUBLER
C1- C2+ +6.6V TO -6.6V VOLTAGE INVERTER
C2- T1IN T2IN T1OUT T2OUT R1OUT R2OUT R1IN R2IN GND VCC
C25 0.1uF
C26 0.1uF
C27 0.1uF
C28 0.1uF
C2 1.5uF_10V
R2 R1 R3 R4 VAL
R6 R5 R7 R8 0
J1 D09S13A4GL00
DSR RxD TxD DTR
PROJECT: TAMA
PL. 2/3
SIZE 4 PCB1643-1
REVISION:
TITLE: BOARD PN531_HSU
VERIFY: C.DEMOMENT
DRAWN BY: T. PAYET
DATE: 18/10/05
PHILIPS SEMICONDUCTORS
2, Rue de la Girafe BP5120
14079 CAEN CEDEX 5
ALL RIGHTS ARE RESERVED. REPRODUCTION IN WHOLE OR IN PART IS PROHIBITED WITHOUT THE WRITTEN CONSENT OF THE COPYRIGHT OWNER
Original PSC