NXP Semiconductors
User's Guide

Document identifier: LSDKUG
Rev. 20.04_290520, 01/2021

Layerscape Software Development Kit User Guide

Supports: LSDK 20.04_290520

Contents

Chapter 1 About This Document....18

Chapter 2 Acronyms and Abbreviations....20

Chapter 3 Release Notes....24
3.1 What's New....24
3.2 Components....43
3.3 Feature support matrix....48
3.4 Supported targets....50
3.5 Fixed, open, and closed issues....52

Chapter 4 Layerscape SDK user guide....62
4.1 LSDK Quick Start....62
4.1.1 Host system requirements....62
4.1.2 Download and deploy LSDK images with flex-installer in Linux environment....63
4.1.3 Manually download LSDK images....68
4.1.4 LSDK Quick Start Guide for FRWY-LS1012A....69
4.1.4.1 Introduction....69
4.1.4.2 FRWY-LS1012A reference information....69
4.1.4.3 Program LSDK composite firmware image....70
4.1.4.4 Automatically download and deploy LSDK images....72
4.1.5 LSDK Quick Start Guide for LS1012ARDB....73
4.1.5.1 Introduction....73
4.1.5.2 LS1012ARDB reference information....73
4.1.5.3 Program LSDK composite firmware image....76
4.1.5.4 Automatically download and deploy LSDK images....78
4.1.6 LSDK Quick Start Guide for TWR-LS1021A....79
4.1.6.1 Introduction....79
4.1.6.2 TWR-LS1021A reference information....79
4.1.6.3 Program LSDK composite firmware image....82
4.1.6.4 Automatically download and deploy LSDK images....85
4.1.7 LSDK Quick Start Guide for LS1028ARDB....86
4.1.7.1 Introduction....86
4.1.7.2 LS1028ARDB reference information....86
4.1.7.3 Program LSDK composite firmware image....91
4.1.7.4 Automatically download and deploy LSDK images....94
4.1.8 LSDK Quick Start Guide for LS1043ARDB....96
4.1.8.1 Introduction....96
4.1.8.2 LS1043ARDB reference information....96
4.1.8.3 LS1043ARDB recovery information....99
4.1.8.4 Program LSDK composite firmware image....100
4.1.8.5 Automatically download and deploy LSDK images....103
4.1.8.6 Frame Manager Configuration (FMC) tool....104
4.1.9 LSDK Quick Start Guide for FRWY-LS1046A....105
4.1.9.1 Introduction....105
4.1.9.2 FRWY-LS1046A reference information....105
4.1.9.3 Program LSDK composite firmware image....109
4.1.9.4 Automatically download and deploy LSDK images....111

4.1.10 LSDK Quick Start Guide for LS1046ARDB 113
4.1.10.1 Introduction 113
4.1.10.2 LS1046ARDB reference information 113
4.1.10.3 LS1046ARDB recovery information 116
4.1.10.4 Program LSDK composite firmware image 117
4.1.10.5 Automatically download and deploy LSDK images 119
4.1.10.6 Frame Manager Configuration (FMC) tool 121
4.1.11 LSDK Quick Start Guide for LS1088ARDB 121
4.1.11.1 Introduction 121
4.1.11.2 LS1088ARDB and LS1088ARDB-PB reference information 122
4.1.11.3 LS1088ARDB and LS1088ARDB-PB recovery information 127
4.1.11.4 Program LSDK composite firmware image 128
4.1.11.5 Automatically download and deploy LSDK images 131
4.1.11.6 Bringing up DPAA2 network interfaces 132
4.1.11.6.1 Use Linux commands to list network interfaces 132
4.1.11.6.2 Use restool wrapper scripts to list DPAA2 objects 132
4.1.11.6.3 Add and destroy network interfaces 133
4.1.11.6.4 Save configuration to a custom DPL file (Optional) 134
4.1.11.6.5 Assign IP addresses to network interfaces 134
4.1.12 LSDK Quick Start Guide for LS2088ARDB 135
4.1.12.1 Introduction 135
4.1.12.2 LS2088ARDB reference information 135
4.1.12.3 LS2088ARDB recovery information 141
4.1.12.4 Program LSDK composite firmware image 141
4.1.12.5 Automatically download and deploy LSDK images 144
4.1.12.6 Bringing up DPAA2 network interfaces 146
4.1.12.6.1 Use Linux commands to list network interfaces 146
4.1.12.6.2 Use restool wrapper scripts to list DPAA2 objects 146
4.1.12.6.3 Add and destroy network interfaces 147
4.1.12.6.4 Save configuration to a custom DPL file (Optional) 147
4.1.12.6.5 Assign IP addresses to network interfaces 148
4.1.13 LSDK Quick Start Guide for LX2160ARDB 148
4.1.13.1 Introduction 148
4.1.13.2 LX2160ARDB reference information 148
4.1.13.3 LX2160ARDB recovery information 155
4.1.13.4 Program LSDK composite firmware image 155
4.1.13.5 Automatically download and deploy LSDK images 161
4.1.13.6 Bringing up DPPA2 network interfaces 162
4.1.13.6.1 Use Linux commands to list network interfaces 162
4.1.13.6.2 Use restool wrapper scripts to list DPAA2 objects 162
4.1.13.6.3 Add and destroy network interfaces 163
4.1.13.6.4 Save configuration to a custom DPL file (Optional) 164
4.1.13.6.5 Assign IP addresses to network interfaces 164
4.2 LSDK memory layout and Userland 165
4.3 How to build LSDK with Flexbuild 170
4.4 How to upgrade the existing LSDK distro with Flexbuild on host 178

Chapter 5 Bootloaders 180
5.1 Boot flow for hardware boards 180
5.1.1 General boot flow 180
5.1.2 Boot flow with PPA 181
5.1.3 Boot flow with TF-A 182
5.1.3.1 Secure boot with TF-A 184
5.2 TF-A 186

5.2.1 Changes in flash layout....186
5.2.2 Changes in U-Boot....187
5.2.3 Changes in DDR initialization....187
5.2.4 Deploying TF-A binaries....191
5.2.4.1 How to compile PBL binary from RCW source file....192
5.2.4.2 How to compile U-Boot binary....192
5.2.4.3 [Optional] How to compile OP-TEE binary....193
5.2.4.4 How to compile TF-A binaries....193
5.2.4.4.1 How to compile BL2 binary....194
5.2.4.4.2 How to compile FIP binary....194
5.2.4.5 How to program TF-A binaries on specific boot mode....195
5.2.4.6 How to compile DDR FIP image (only required for LX2160A)....196
5.3 U-Boot....197
5.3.1 LSDK U-Boot uses distro boot feature....197
5.3.2 LSDK U-Boot flash image feature....200
5.4 UEFI....201
5.4.1 Introduction....203
5.4.2 UEFI overview....203
5.4.3 LSDK distro boot with UEFI....205
5.4.4 Product Execution....210
5.4.4.1 LX2160ARDB....211
5.4.4.2 LS1043ARDB....212
5.4.4.3 LS1046ARDB....213
5.4.4.4 LS2088ARDB....214
5.4.5 LSDK Distro Boot Logs....215
5.4.6 PXE Boot....218
5.4.6.1 Creating the PXE Boot Setup....218
5.4.6.2 Installing the Kernel....220

Chapter 6 Security....223
6.1 Secure boot....223
6.1.1 Hardware Pre-Boot Loader (PBL) based platforms....223
6.1.1.1 Introduction....223
6.1.1.2 Secure boot process....224
6.1.1.3 Pre-boot phase....225
6.1.1.4 ISBC phase....226
6.1.1.4.1 ISBC code flow....226
6.1.1.4.2 Super Root Keys (SRKs) and signing keys....227
6.1.1.4.3 Key revocation....227
6.1.1.4.4 Alternate image support....227
6.1.1.4.5 ESBC with CSF header....228
6.1.1.5 ESBC phase....228
6.1.1.5.1 Boot script....229
6.1.1.6 Next executable (Linux phase)....233
6.1.1.7 Application execution....234
6.1.1.7.1 Introduction....234
6.1.1.7.2 Chain of Trust with confidentiality....235
6.1.1.8 Troubleshooting....239
6.1.1.9 CSF Header Data Structure....240
6.1.1.10 ISBC Validation Error Codes....249
6.1.1.11 ESBC Validation Error Codes....252
6.1.1.12 Trust Architecture and SFP Information....254
6.1.2 Service Processor (SP) Based Platforms....254
6.1.2.1 Secure boot Introduction....254

6.1.2.1.1 Secure boot process....256
6.1.2.2 ISBC Phase....257
6.1.2.2.1 ISBC for PBI validation....258
6.1.2.2.2 ISBC for BL1 (Boot-loader 1) validation....258
6.1.2.3 ESBC Phase....259
6.1.2.3.1 esbc_validate command....259
6.1.2.3.2 esbc_halt command....259
6.1.2.3.3 blob enc command....259
6.1.2.3.4 blob dec command....260
6.1.2.3.5 Boot Script....260
6.1.2.4 Next executable phase....263
6.1.2.5 Application Execution....263
6.1.2.5.1 Introduction....264
6.1.2.5.2 Chain of Trust with confidentiality....265
6.1.2.6 PBI structure....268
6.1.2.7 CSF header structure definition....269
6.1.2.8 CSF header structure definition....276
6.1.2.9 Secure boot specific RCW fields....281
6.1.2.10 ISBC error codes....282
6.1.2.11 ESBC error codes....289
6.1.2.12 Troubleshooting....290
6.1.3 Code Signing Tool....290
6.1.3.1 Key generation....291
6.1.3.1.1 gen_keys....291
6.1.3.1.2 gen_otpmk_drbg....293
6.1.3.1.3 gen_drv_drbg....294
6.1.3.2 Header creation....295
6.1.3.2.1 uni_pbi....295
6.1.3.2.2 uni_sign....298
6.1.3.3 Signature generation....302
6.1.3.3.1 gen_sign....304
6.1.3.3.2 sign_embed....305
6.1.4 Procedure to enable secure boot....305
6.1.5 Procedure to run secure boot....306
6.1.5.1 Prepare board for Secure Boot....306
6.1.5.2 Running secure boot on target platforms....308
6.1.5.2.1 Program SRKH mirror registers in CodeWarrior environment....308
6.1.5.2.2 Program SRKH mirror registers in U-Boot environment....311
6.1.5.3 Steps to run chain of trust with confidentiality....312
6.2 IMA-EVM on LS Trust Architecture SoCs....313
6.2.1 Introduction....313
6.2.2 Secure key and its blob....314
6.2.3 EVM Key on user keyrings....314
6.2.4 Enabling secure key and encrypted key in kernel config....315
6.2.5 Enabling IMA EVM integrity options in kernel image....315
6.2.6 Modes of operation in IMA EVM....315
6.2.7 IMA EVM feature use cases....316
6.2.8 Appendix A: Steps to enable IMA EVM using flex builder....317
6.2.9 Appendix B: Standalone steps to enable IMA EVM....318
6.2.10 Appendix C: Steps to verify IMA EVM feature....319
6.2.11 Appendix - D: Points to remember....320
6.3 Trusted Execution (OP-TEE)....320
6.3.1 Introduction....320
6.3.1.1 Support platform....320
6.3.1.2 Test Sequence....321

6.4 Fuse Provisioning User Guide....321
6.4.1 Introduction....321
6.4.2 Fuse Programming Scenarios....322
6.4.2.1 Fuse Provisioning during OEM Manufacturing....322
6.4.3 Fuse Provisioning Utility....323
6.4.3.1 Fuse file structure....324
6.4.3.2 Sample input file for fuse provisioning tool....324
6.4.4 Build fuse provisioning firmware image....326
6.4.5 Deploy and run fuse provisioning....326
6.4.5.1 Enable POVDD for SFP....327
6.4.5.2 Deploy firmware image on board....327
6.4.5.3 Run firmware image on board....327
6.4.6 Validation....327
6.4.7 Error Codes....327
6.5 PKCS#11 and Secure Object Library....329
6.5.1 Introduction....329
6.5.2 Supported APIs....331
6.5.2.1 PKCS#11 Library – libpkcs11.so....331
6.5.2.2 Secure Object Library – libsecure_obj.so....333
6.5.3 Integrating applications with Secure Object....335
6.5.3.1 Using PKCS#11 APIs....336
6.5.3.2 Using Secure Object APIs....336
6.5.3.3 Applications using OpenSSL APIs....336
6.5.3.3.1 Secure Object Library based OpenSSL Engine (libeng_secure_obj)....336
6.5.3.3.2 PKCS#11 based OpenSSL Engine (Third party OpenSC/libp11)....339
6.5.4 Board Bootup & Running applications....340
6.5.4.1 Board Bootup....340
6.5.4.2 Running applications....341
6.5.4.2.1 sobj_app....341
6.5.4.2.2 pkcs11_app....345
6.5.4.2.3 mp_app....352
6.5.4.2.4 mp_verify....353
6.5.4.2.5 sobj_eng_app....353
6.5.4.2.6 thread_test....354
6.5.5 Validation....355
6.5.6 Appendix....355

Chapter 7 Linux Kernel....358
7.1 Configuring and building....360
7.2 Device Drivers....362
7.2.1 Enhanced Direct Memory Access (eDMA)....362
7.2.2 CAAM Direct Memory Access (DMA)....365
7.2.3 DCU Display Device Driver User Manual....368
7.2.4 Enhanced Secured Digital Host Controller (eSDHC)....372
7.2.5 IEEE 1588/802.1AS....377
7.2.6 Integrated Flash Controller (IFC)....383
7.2.6.1 Integrated Flash Controller NOR Flash User Manual....383
7.2.6.2 Integrated Flash Controller NAND Flash User Manual....389
7.2.7 Low Power Universal Asynchronous Receiver/Transmitter (LPUART)....396
7.2.8 PCI Express Interface Controller....399
7.2.8.1 PCIe Linux Driver....399
7.2.8.2 PCIe Advanced Error Reporting User Manual....402
7.2.8.3 PCIe Remove and Rescan User Manual....404
7.2.9 Quad Serial Peripheral Interface (QSPI)....405

7.2.10 Flexible Serial Peripheral Interface (FlexSPI)..... 407
7.2.11 Queue Direct Memory Access Controller (qDMA)..... 408
7.2.12 Real Time Clock (RTC)..... 411
7.2.13 Synchronous Audio Interface (SAI)..... 413
7.2.14 Serial Advanced Technology Attachment (SATA)..... 416
7.2.15 Security Engine (SEC)..... 418
7.2.16 Time Division Multiplexing (TDM)..... 431
7.2.17 Universal Serial Bus Interfaces..... 436
7.2.17.1 USB 3.0 Controller (DesignWare USB3)..... 437
7.2.17.2 USB 2.0 Controller..... 456
7.2.18 Graphics processing unit (GPU)..... 459
7.2.19 LCD and display transmitter controller..... 461
7.2.20 FlexTimer (FTM)..... 468
7.2.21 Inter-Integrated Circuit (I2C)..... 470
7.2.22 Watchdog..... 473
7.2.23 QUICC Engine Time Division Multiplexing User Manual..... 476
7.3 kdump/kexec User Manual..... 479

Chapter 8 QorIQ networking technologies..... 489
8.1 Summary of networking technologies..... 489
8.2 DPAA1-specific Software..... 489
8.2.1 DPAA Software Architecture Overview..... 489
8.2.1.1 Introduction..... 490
8.2.1.1.1 General architectural considerations..... 490
8.2.1.1.2 Multicore design..... 490
8.2.1.1.3 Parse/classification software offload..... 491
8.2.1.1.4 Flow order considerations..... 491
8.2.1.1.5 Managing flow-to-core affinity..... 493
8.2.1.2 DPAA1 Goals..... 494
8.2.1.3 FMan Overview..... 494
8.2.1.4 QMan Overview..... 496
8.2.1.5 QMan Scheduling..... 501
8.2.1.6 BMan..... 504
8.2.1.7 Order Handling..... 505
8.2.1.8 Pool Channels..... 508
8.2.1.9 Application Mapping..... 512
8.2.1.10 FQ/WQ/Channel..... 515
8.2.2 Linux Ethernet..... 518
8.2.2.1 Introduction..... 518
8.2.2.2 The DPAA1-Ethernet view of the world..... 519
8.2.2.2.1 The Linux kernel APIs..... 519
8.2.2.2.2 The Driver's building blocks..... 520
8.2.2.3 DPAA1 resources initialization..... 521
8.2.2.3.1 What, Why and How resources are initialized..... 521
8.2.2.3.2 Private Ethernet driver: Hashing/PCD frame queues..... 522
8.2.2.4 The (Simplified) Life of a packet..... 522
8.2.2.4.1 Private net device: Tx..... 523
8.2.2.4.2 Private net device: Rx..... 524
8.2.2.5 Private Ethernet Driver..... 524
8.2.2.5.1 Network driver..... 525
8.2.2.5.2 Configuration..... 526
8.2.2.5.3 Features..... 530
8.2.2.5.4 Quality of Service..... 537
8.2.2.5.5 Debugging..... 547

8.2.2.5.6 Frequently Asked Questions....550
8.2.2.5.7 Known issues....551
8.2.2.6 Upstream Ethernet Driver....551
8.2.2.7 Performance considerations....552
8.2.3 Queue Manager (QMan) and Buffer Manager (BMan)....552
8.2.3.1 QMan/BMan Drivers Introduction....552
8.2.3.2 QMan BMan API Reference Manual....560
8.2.3.2.1 Introduction to the Queue Manager and the Buffer Manager....560
8.2.3.2.2 Buffer Manager....560
8.2.3.2.3 BMan CoreNet portal APIs....564
8.2.3.2.4 Queue Manager....570
8.2.3.2.5 QMan portal APIs....578
8.2.3.2.6 Sysfs and debugfs QMan/BMan interfaces....593
8.2.3.2.7 Error handling and reporting....607
8.2.3.2.8 Operating system specifics....608
8.2.4 Configuring DPAA Frame Queues....608
8.2.4.1 Introduction....609
8.2.4.2 FMan Network interface Frame Queue Configuration....609
8.2.4.3 FMan network interface ingress FQs configuration....609
8.2.4.4 Ingress FQs common configuration guidelines....610
8.2.4.5 Dynamic load balancing with order preservation - ingress FQs configuration guidelines....611
8.2.4.6 Dynamic load balancing with order restoration - ingress FQs configuration guidelines....612
8.2.4.7 Static distribution - Ingress FQs Configuration Guidelines....613
8.2.4.8 FMan network interface egress FQs configuration....613
8.2.4.9 Accelerator Frame Queue Configuration....614
8.2.4.10 DPAA1 Frame Queue Configuration Guideline Summary....615
8.2.5 Frame Manager....617
8.2.5.1 Frame Manager Linux Driver User Guide....617
8.2.5.1.1 Introduction....617
8.2.5.1.2 The Linux FMD Devices....618
8.2.5.1.3 Linux FMD Programming Model....621
8.2.5.1.4 Frame Manager Linux Driver API Reference....623
8.2.5.2 Frame Manager Driver User Guide....634
8.2.5.2.1 Introduction....634
8.2.5.2.2 Frame Manager Features....634
8.2.5.2.3 Frame Manager Driver Components....635
8.2.5.2.4 Driver Modules in the System....636
8.2.5.2.5 FMan Driver Calling Sequence....637
8.2.5.2.6 Global FMan Driver....638
8.2.5.2.7 FMan Parse-Classify-Distribute Driver....640
8.2.5.2.8 FMan Port Driver....666
8.2.5.2.9 FMan MAC Driver....674
8.2.5.2.10 FMan VSP Driver....675
8.2.5.2.11 FMan RTC (IEEE 1588) Driver....677
8.2.5.2.12 FMan MURAM Driver....679
8.2.5.2.13 Supported Network Protocols....679
8.2.6 Frame Manager Configuration Tool User Guide....683
8.2.6.1 Introduction....683
8.2.6.2 FMC Tool Features....683
8.2.6.3 FMC Tool Components and Packaging....684
8.2.6.4 FMC Tool - Runtime Environment Mode....684
8.2.6.5 FMC Tool - Host Mode....685
8.2.6.5.1 Host Mode Output - C Source Code Files....686
8.2.6.6 FMC Tool Command-Line Arguments....687
8.2.6.7 The NetPDL and NetPCD XML Markup Languages....688

8.2.6.8 Protocol files..... 688
8.2.6.8.1 Standard Protocol File..... 688
8.2.6.8.2 Custom Protocol File.....689
8.2.6.9 Policy file.....690
8.2.6.9.1 Distribution Section.....690
8.2.6.9.2 Policy Section..... 694
8.2.6.9.3 Classification Section.....699
8.2.6.9.4 Policer Section.....700
8.2.6.10 Configuration File.....702
8.2.6.11 NXP NetPDL Reference..... 702
8.2.6.11.1 Basic XML Rules.....703
8.2.6.11.2 The netpdl Element.....703
8.2.6.11.3 The protocol element..... 703
8.2.6.11.4 The format element.....705
8.2.6.11.5 The execute-code element..... 706
8.2.6.11.6 Expressions..... 714
8.2.6.11.7 Tips and Recommendations..... 723
8.2.6.11.8 Limitations.....724
8.2.6.12 NetPCD Reference..... 725
8.2.6.12.1 The netpcd element..... 725
8.2.6.12.2 The policy element.....725
8.2.6.12.3 The dist_order element..... 726
8.2.6.12.4 The distributionref element..... 727
8.2.6.12.5 The distribution element.....727
8.2.6.12.6 The key element..... 730
8.2.6.12.7 The fieldref element..... 730
8.2.6.12.8 The queue element.....730
8.2.6.12.9 The protocols and protocolref elements.....731
8.2.6.12.10 The combine element..... 733
8.2.6.12.11 The action element (for use in a policy file)..... 734
8.2.6.12.12 The classification element.....735
8.2.6.12.13 The entry element.....739
8.2.6.12.14 The policer element..... 740
8.2.6.12.15 The nonheader element.....741
8.2.6.12.16 Hash Tables.....742
8.2.6.12.17 Virtual Storage Profiles Element.....743
8.2.6.12.18 Manipulation Parameters.....744
8.2.6.13 Standard Protocol File - Excerpt.....754
8.2.6.14 Custom Protocol File - GTP Protocol Example.....761
8.2.7 Security Engine (SEC)..... 762
8.2.8 Decompression/Compression Acceleration (DCE)..... 764
8.3 DPAA2-specific Software..... 766
8.3.1 DPAA2 Software Overview..... 766
8.3.1.1 Introduction..... 766
8.3.1.2 DPAA2 Hardware.....766
8.3.1.2.1 Introduction..... 767
8.3.1.2.2 DPAA2 hardware..... 767
8.3.1.2.3 LS2088A block diagram.....768
8.3.1.3 DPAA2 Linux Software..... 769
8.3.1.3.1 Introduction..... 769
8.3.1.3.2 Linux and DPAA2.....769
8.3.1.3.3 DPAA2, Management Complex, and drivers..... 770
8.3.1.3.4 DPAA2 and plug-and-play..... 771
8.3.1.3.5 Datapath layout files and restool.....771
8.3.1.4 DPAA2 Networking Subsystem Deeper Dive..... 772

8.3.1.4.1 DPAA2 hardware abstraction example....773
8.3.1.4.2 Management Complex: How DPAA2 objects are created and managed....780
8.3.1.4.3 Objects and topology....787
8.3.1.4.4 AIOP in DPAA2....789
8.3.2 DPAA2 Quick Start Guide....790
8.3.2.1 Data Path Resource Containers....790
8.3.2.1.1 Creating DPRCs....790
8.3.2.1.2 DPRCs and Hot Plug....790
8.3.2.2 Key Release Files: RCW, DPC and DPL....791
8.3.2.2.1 RCW....791
8.3.2.2.2 Data path configuration file (DPC)....791
8.3.2.2.3 Data path layout file (DPL)....792
8.3.2.3 Linux Ethernet....795
8.3.2.3.1 Features overview....795
8.3.2.3.2 Compiling and selecting Kconfig options....795
8.3.2.3.3 Creating a DPAA2 network interface....796
8.3.2.3.4 DPAA2 Ethernet features....801
8.3.2.3.5 Performance considerations....814
8.3.2.4 Setting up Ethernet Switch Capability....815
8.3.2.4.1 Ethernet Switch overview....815
8.3.2.4.2 Switch object creation....816
8.3.2.4.3 Setting up the driver....819
8.3.2.4.4 Commands supported....820
8.3.2.5 Setting Up Edge Virtual Bridge Capability....822
8.3.2.5.1 EVB overview....822
8.3.2.5.2 EVB object creation....822
8.3.2.5.3 Setting up the EVB driver....825
8.3.2.5.4 EVB commands supported....826
8.3.2.5.5 Forwarding methods overview....827
8.3.2.6 Security Engine (SEC)....830
8.3.2.7 Decompression Compression Engine (DCE)....841
8.3.3 DPAA2 Standard Linux Documentation....842
8.3.3.1 Kernel Documentation Directory....842
8.3.3.2 DPAA2 Resource Management Tool (restool) User Manual....849
8.3.3.2.1 DPRC commands....849
8.3.3.2.2 DPNI Commands....858
8.3.3.2.3 DPIO Commands....862
8.3.3.2.4 DPSW Commands....865
8.3.3.2.5 DPBP Commands....869
8.3.3.2.6 DPCON Commands....870
8.3.3.2.7 DPCI Commands....872
8.3.3.2.8 DPSECI Commands....874
8.3.3.2.9 DPDMUX Commands....876
8.3.3.2.10 DPMCP Commands....880
8.3.3.2.11 DPMAC Commands....881
8.3.3.2.12 DPDCEI Commands....883
8.3.3.2.13 DPAIOP Commands....885
8.3.3.2.14 DPDBG Commands....887
8.3.4 DPAA2 User Manual....892
8.3.5 DPAA2 API Reference Manual....892
8.3.6 Soft Parser Support....892
8.3.6.1 Soft Parser Configuration Tool....892
8.3.6.1.1 Introduction....892
8.3.6.1.2 Defining a custom protocol....892
8.3.6.1.3 Expressions....901

8.3.6.1.4 FAF – frame attribute flags....910
8.3.6.1.5 Subroutines support....914
8.3.6.1.6 SP Hardware configuration file....915
8.3.6.1.7 Tips and recommendations....918
8.3.6.1.8 Limitations....920
8.3.6.1.9 Running the Soft Parser tool....920
8.3.6.1.10 Output of the SPC tool....921
8.3.6.2 SPC on DPAA 2.x Based Platforms....921
8.3.6.2.1 Introduction....921
8.3.6.2.2 Applying Soft Parser Blob on Hardware....923
8.3.6.2.3 Limitations....924
8.3.7 AIOP....924
8.3.7.1 AIOP Sample Applications....925
8.3.7.1.1 Creating AIOP Containers....925
8.3.7.1.2 AIOP Packet Reflector Application....926
8.3.7.1.3 AIOP Packet Classifier Application....929
8.3.7.1.4 AIOP Control Flow Application....933
8.3.7.1.5 AIOP Header Manipulation Application....938
8.3.7.1.6 AIOP Statistics Application....941
8.3.7.1.7 AIOP QoS_demo Application....943
8.3.7.1.8 Tuning memory....946
8.3.7.2 AIOP Tool User's Guide....946
8.3.7.2.1 Introduction....946
8.3.7.2.2 DPAA2 Software....946
8.3.7.2.3 Product Description....946
8.3.7.2.4 System Requirements....948
8.3.7.2.5 AIOP Tool Usage....948
8.3.7.2.6 Known Limitations....952
8.3.7.2.7 Sample VFIO Binding Script....952
8.3.7.2.8 Steps For Dynamic DPRC Suitable For AIOP Tool Using restool....953
8.3.7.3 AIOP User Manual....955
8.3.7.4 AIOP Program Profiling....955
8.3.7.4.1 Overview....955
8.3.7.4.2 AIOP Program Design: Budgets Per Processing Elements....955
8.3.7.4.3 AIOP Program Profiling and Performance Tuning....956
8.3.7.4.4 FDMA/CDMA....961
8.3.7.4.5 Core Profiling....964
8.3.7.4.6 Memory profiling....967
8.3.7.4.7 CTLU - Parser....969
8.3.7.4.8 OSM....970
8.3.7.4.9 Statistics Engine....974
8.3.7.4.10 IP Fragmentation (IPF)....974
8.3.7.4.11 IP Reassembly (IPR)....974
8.3.7.4.12 IPSec....975
8.3.7.4.13 Appendix A....976
8.3.7.5 AIOP Service Layer API Reference Manual....980
8.4 Packet Forward Engine (PFE) Network Driver....980
8.4.1 Introduction....980
8.4.1.1 Overview....980
8.4.1.2 Purpose....980
8.4.1.3 Features....981
8.4.2 High level decomposition and data flow....981
8.4.3 NAPI support....982
8.4.4 Interrupt coalescing....982
8.4.5 Checksum offloading....982

8.4.6 Scatter gather support....982
8.4.7 Ethtool support....983
8.5 Linux Ethernet Driver for eTSEC....983
8.5.1 Linux Ethernet Driver for eTSEC....983
8.5.1.1 Introduction....983
8.5.1.1.1 Overview....983
8.5.1.1.2 Purpose....983
8.5.1.1.3 Features....983
8.5.1.1.4 Notes on high level decomposition and data flow....985
8.5.1.2 Functionality....987
8.5.1.2.1 Multi-Queue support....987
8.5.1.2.2 RSS support....988
8.5.1.2.3 NAPI support....992
8.5.1.2.4 Interrupt Coalescing....992
8.5.1.2.5 Header Recognition and Csum Offload....992
8.5.1.2.6 Scatter Gather support....993
8.5.1.3 Configuration and Control....994
8.5.1.3.1 Device Tree initialization....994
8.5.1.3.2 Ethtool support....995
8.6 ENETC ethernet and Felix switch drivers....995
8.6.1 LS1028A Interface naming....996
8.6.2 ENETC Linux Ethernet driver....998
8.6.2.1 Introduction....998
8.6.2.1.1 Acronyms, abbreviations, terms....998
8.6.2.2 Linux kernel configuration items....999
8.6.2.2.1 Driver modules and dependencies....999
8.6.2.2.2 Kernel configuration options....999
8.6.2.2.3 Device tree nodes....1000
8.6.2.2.4 Source files....1001
8.6.2.3 Linux runtime usage....1001
8.6.2.3.1 ENETC interfaces and probing....1002
8.6.2.3.2 Multi-queue support....1003
8.6.2.3.3 Rx checksum offload....1003
8.6.2.3.4 Unicast and multicast MAC filtering....1004
8.6.2.3.5 VLAN filtering....1004
8.6.2.3.6 VLAN insertion/ extraction....1004
8.6.2.3.7 Scatter-gather and jumbo frame support....1005
8.6.2.3.8 Rx flow hashing (RSS)....1005
8.6.2.3.9 Rx flow steering (RFS)....1007
8.6.2.3.10 QoS – TC offloading with h/w MQPRIO....1008
8.6.2.3.11 Statistics and debug counters....1009
8.6.2.3.12 VF primary MAC address config....1009
8.6.2.4 Performance considerations and benchmarking provisions....1009
8.6.2.5 Known limitations....1011
8.6.2.5.1 External MDIO read issue....1011
8.6.2.5.2 VF primary MAC address configuration issues....1012
8.6.3 Felix Linux Ethernet driver....1012
8.6.3.1 Introduction....1012
8.6.3.2 Linux kernel configuration items....1012
8.6.3.2.1 Driver modules and dependencies....1012
8.6.3.2.2 Kernel configuration options....1013
8.6.3.2.3 Device tree nodes....1013
8.6.3.2.4 Source files....1015
8.6.3.3 Linux runtime usage....1015
8.6.3.3.1 Felix interfaces and probing....1015

8.6.3.3.2 Connecting to host CPU ... 1016
8.6.3.3.3 Single port mode ... 1019
8.6.3.3.4 Bridge mode ... 1019
8.6.3.3.5 Gateway mode ... 1020
8.6.3.3.6 VLAN filtering ... 1021
8.6.3.3.7 Statistic counters ... 1022
8.6.3.4 Kernel 4.19 ... 1022
8.6.3.4.1 Differences from LSDK 19.09 kernel 4.19 ... 1023
8.6.3.4.2 Differences from LSDK 20.04 kernel 5.4 ... 1023
8.6.3.5 Known limitations ... 1023
8.6.3.5.1 Single bridge support ... 1023
8.6.3.5.2 Standalone module link fails ... 1024
8.7 Time Sensitive Networking (TSN) ... 1024
8.7.1 Using TSN features on LS1028ARDB ... 1024
8.7.1.1 Tsntool User Manual ... 1024
8.7.1.1.1 Getting the source code ... 1024
8.7.1.1.2 Tsn tool commands ... 1024
8.7.1.1.3 Tsntool commands and parameters ... 1026
8.7.1.1.4 Input tips ... 1033
8.7.1.1.5 Non-interactive mode ... 1033
8.7.1.2 Kernel configuration ... 1033
8.7.1.3 Basic TSN configuration examples on ENETC ... 1035
8.7.1.3.1 Linuxptp test ... 1035
8.7.1.3.2 Qbv test ... 1035
8.7.1.3.3 Qci test cases ... 1037
8.7.1.3.4 Qbu test ... 1040
8.7.1.3.5 Qav test ... 1042
8.7.1.4 Basic TSN configuration examples on the switch ... 1042
8.7.1.4.1 Switch configuration ... 1043
8.7.1.4.2 Linuxptp test ... 1043
8.7.1.4.3 Qbv test ... 1044
8.7.1.4.4 Qbu test ... 1046
8.7.1.4.5 Qci test cases ... 1047
8.7.1.4.6 Qav test case ... 1051
8.7.1.4.7 Seamless redundancy test case ... 1052
8.7.1.4.8 TSN stream identification ... 1053
8.8 General networking performance considerations ... 1056

Chapter 9 Linux user space ... 1057
9.1 Libraries ... 1057
9.1.1 OpenSSL ... 1057
9.1.1.1 Overview ... 1057
9.1.1.2 Manual Build of OpenSSL with Cryptodev Engine Support ... 1059
9.1.1.3 Hardware Offloading with OpenSSL ... 1060
9.1.1.4 TLS Ciphersuites and TLS Protocol Versions ... 1063
9.1.2 Runtime Assembler Library Reference ... 1064
9.1.2.1 Runtime Assembler Library Reference ... 1064
9.2 Data Plane Development Kit (DPDK) ... 1064
9.2.1 Introduction ... 1064
9.2.1.1 Supported platforms and platform-specific details ... 1064
9.2.1.1.1 LS1012A Reference Design Board (RDB) ... 1064
9.2.1.1.2 LS1028A Reference Design Board (RDB) ... 1066
9.2.1.1.3 LS1043A Reference Design Board (RDB) ... 1067
9.2.1.1.4 LS1046A Reference Design Board (RDB) / LS1046A Freeway Board (FRWY) ... 1068

9.2.1.1.5 LS1088A Reference Design Board (RDB)....1070
9.2.1.1.6 LS2088A Reference Design Board (RDB)....1072
9.2.1.1.7 LX2160A Reference Design Board (RDB)....1073
9.2.1.2 References....1074
9.2.2 DPDK Overview....1075
9.2.2.1 DPDK Platform Support....1075
9.2.2.2 DPAA: Supported DPDK Features....1077
9.2.2.3 DPAA2: Supported DPDK Features....1078
9.2.2.4 PPFE supported DPDK features....1078
9.2.2.5 ENETC supported DPDK features....1078
9.2.3 Build DPDK....1079
9.2.3.1 Build DPDK using Flexbuild....1079
9.2.3.2 Build DPDK on host (Native)....1081
9.2.3.3 Standalone build of DPDK libraries and applications....1083
9.2.3.4 DPDK based Packet Generator....1087
9.2.3.5 Build OVS-DPDK using Flexbuild....1088
9.2.3.6 Virtual machine (VM or guest) images....1089
9.2.4 Executing DPDK Applications on Host....1089
9.2.4.1 Booting up the Target board....1089
9.2.4.2 Prerequisite for running DPDK applications....1092
9.2.4.2.1 Test Environment Setup....1092
9.2.4.2.2 Generic Setup - DPAA....1093
9.2.4.2.3 Generic Setup - DPAA2....1095
9.2.4.2.4 Generic Setup - PPFE....1096
9.2.4.2.5 Generic setup – ENETC....1096
9.2.4.2.6 DPAA2: Multiple parallel DPDK Applications....1097
9.2.4.3 DPDK example applications....1098
9.2.4.4 Command interface (CMDIF) demo application....1108
9.2.5 OVS-DPDK and DPDK in VM with VIRTIO Interfaces....1110
9.2.5.1 Generic steps....1111
9.2.5.2 Configuring OVS....1111
9.2.5.3 Launch Virtual Machine....1114
9.2.5.4 Accessing virtual machine console....1116
9.2.5.5 Launching two virtual machines....1116
9.2.5.6 Running DPDK applications in VM....1117
9.2.5.7 Multi Queue VIRTIO support....1118
9.2.5.8 OVS DPDK Performance Guide....1120
9.2.6 Enabling DPAA2 direct assignment for DPDK....1121
9.2.6.1 Launch Virtual Machine....1121
9.2.6.2 Accessing the virtual machine console....1124
9.2.6.3 Running DPDK applications with direct device assignments....1125
9.2.7 DPDK on Docker....1126
9.2.7.1 Docker Overview....1126
9.2.7.2 DPAA1-Platform....1126
9.2.7.2.1 Running Docker Container on DPAA1....1126
9.2.7.2.2 Running the DPDK Application....1126
9.2.7.3 DPAA2-Platform....1126
9.2.7.3.1 Traffic Multiplexer/De-Multiplexer....1127
9.2.7.3.2 Single Docker Instance - Container Configuration (DPDMUX/DPSW)....1129
9.2.7.3.3 Running Docker Container on DPAA2....1131
9.2.7.3.4 Running the DPDK Application....1131
9.2.7.3.5 Example Configuration for 2 Docker Instances: Using DPDMUX....1131
9.2.7.3.6 Example Configuration for 2 Docker Instances: Using DPSW....1133
9.2.8 Known Limitations and Future Work....1135
9.2.9 Troubleshooting....1136

9.2.10 DPDK Performance Reproducibility Guide..... 1138
9.2.11 Use cases..... 1145
9.2.11.1 Traffic bifurcation using DPDMUX on DPAA2..... 1145
9.2.11.1.1 Environment setup..... 1145
9.2.11.1.2 Expected results..... 1150
9.2.11.1.3 Application Limitation..... 1152
9.2.11.2 DPDK multi-process..... 1152
9.2.11.2.1 DPDK Multiprocess Support..... 1152
9.2.11.2.2 Various Multiprocess Models..... 1152
9.2.11.2.3 Environment Setup..... 1153
9.2.11.2.4 Executing DPDK example application..... 1156
9.2.11.3 Traffic Policing in DPAA..... 1159
9.2.11.4 Precision Time Protocol (IEEE1588)..... 1160
9.2.11.4.1 Supported platforms..... 1161
9.2.11.4.2 Build procedure..... 1161
9.2.11.4.3 Test setup and prerequisite to test with ptpclient..... 1161
9.2.11.4.4 Test procedure with ptpclient..... 1161
9.3 Vector Packet Processing (VPP)..... 1163
9.3.1 Introduction..... 1164
9.3.2 Supported platform..... 1166
9.3.3 Supported usecases..... 1166
9.3.4 Build VPP..... 1167
9.3.5 Executing VPP..... 1168
9.3.6 Known Limitations..... 1170
9.3.7 VPP performance reproducibility guide - LS1043A/LS1046A..... 1170
9.3.8 VPP performance reproducibility guide - LS1088A/LS2088A..... 1174
9.4 USDPAA..... 1178

Chapter 10 Virtualization..... 1179
10.1 KVM/QEMU User Guide and Reference..... 1179
10.1.1 KVM/QEMU Overview..... 1179
10.1.1.1 Using QEMU and KVM..... 1180
10.1.1.1.1 Overview of Using QEMU..... 1180
10.1.1.1.2 Virtual Machine Memory..... 1182
10.1.1.1.3 Virtual network interfaces..... 1182
10.1.1.1.4 Virtual block devices..... 1183
10.1.1.1.5 Direct assigned devices 1183
10.1.1.1.6 VMs and the Linux Scheduler..... 1185
10.1.1.2 Virtual Machine Overview..... 1186
10.1.1.3 Introduction to KVM and QEMU..... 1187
10.1.1.4 Device Tree Overview..... 1188
10.1.1.5 References..... 1188
10.1.1.6 For More Information..... 1189
10.1.1.7 Virtual machine reference..... 1189
10.1.1.7.1 VM Overview..... 1189
10.1.1.7.2 Memory Map of Virtual I/O Devices..... 1189
10.1.1.7.3 Virtual machine state at initialization..... 1190
10.1.1.7.4 Virtual CPUs..... 1190
10.1.1.7.5 VGIC..... 1190
10.1.2 Configuring and Building..... 1191
10.1.2.1 Overview..... 1191
10.1.2.2 Quick Start - Recommended Configuration Options..... 1191
10.1.2.3 Host Kernel: Enabling KVM..... 1192
10.1.2.4 Host Kernel: Enabling Virtual Networking..... 1193

10.1.2.5 Host kernel: Enabling DPAA2 direct assignment 1193
10.1.2.6 Host kernel: Enabling PCIE direct assignment 1193
10.1.2.7 Guest kernel: Enabling console..... 1194
10.1.2.8 Guest Kernel: Enabling Network and Block Virtual I/O..... 1194
10.1.2.9 Building kernel with KVM support using flexbuild..... 1194
10.1.2.10 Building QEMU..... 1195
10.1.2.11 Creating a host Linux root filesystem..... 1196
10.1.2.12 Creating a guest Linux root filesystem..... 1196
10.1.3 KVM/QEMU How-to's..... 1196
10.1.3.1 Quick-start Steps to Build and Deploy KVM..... 1196
10.1.3.2 Quick-start Steps to Run KVM Using Hugetlbfs..... 1197
10.1.3.3 How to Use Virtual Network Interfaces Using Virtio..... 1198
10.1.3.4 How to use vhost-net with virtio..... 1200
10.1.3.5 How to Use Virtual Disks Using Virtio..... 1201
10.1.3.6 How to use virtual disks using virtio-blk-dataplane..... 1203
10.1.3.7 How to use DPAA2 direct assignment without scripts 1203
10.1.3.8 How to use DPAA2 direct assignment with scripts 1205
10.1.3.9 How to use PCIE direct assignment..... 1212
10.1.3.10 Passthrough of USB Devices 1212
10.1.3.11 Debugging: How to Examine Initial Virtual Machine State with QEMU..... 1213
10.1.3.12 Debugging: How to Profile Virtualization Overhead with KVM..... 1214
10.1.3.13 Debugging virtual machines..... 1216
10.1.3.13.1 QEMU Monitor..... 1216
10.1.3.13.2 QEMU GDB Stub..... 1216
10.2 Linux Containers User Guide..... 1217
10.2.1 Introduction to Linux Containers..... 1218
10.2.1.1 NXP LXC Release Notes..... 1218
10.2.1.2 Overview..... 1218
10.2.1.3 Comparing LXC and Libvirt..... 1219
10.2.1.4 For Further Information..... 1220
10.2.2 More Details..... 1220
10.2.2.1 LXC: Command Reference..... 1220
10.2.2.2 LXC: Configuration Files..... 1221
10.2.2.3 LXC: Templates..... 1222
10.2.2.4 Containers with Libvirt..... 1223
10.2.2.5 Linux Control Groups (cgroups)..... 1224
10.2.2.6 Linux Namespaces..... 1225
10.2.2.7 POSIX Capabilities..... 1225
10.2.3 LXC How To's..... 1226
10.2.3.1 LXC: Getting Started (with a Busybox System Container)..... 1226
10.2.3.2 LXC: How to configure non-virtualized networking (lxc-no-netns.conf)..... 1230
10.2.3.3 LXC: How to assign a physical network interface to a container (lxc-phys.conf)..... 1231
10.2.3.4 LXC: How to configure networking with virtual Ethernet pairs (lxc-veth.conf)..... 1232
10.2.3.5 LXC: How to configure networking with macvlan (lxc-macvlan.conf)..... 1234
10.2.3.6 LXC: How to configure networking using a VLAN (lxc-vlan.conf)..... 1235
10.2.3.7 LXC: How to monitor containers..... 1237
10.2.3.8 LXC: How to modify the capabilities of a container to provide additional isolation..... 1238
10.2.3.9 LXC: How to use cgroups to manage and control a containers resources..... 1239
10.2.3.10 LXC: How to run an application in a container with lxc-execute..... 1240
10.2.3.11 LXC: How to run an unprivileged container..... 1242
10.2.3.12 LXC: How to run containers with Seccomp protection..... 1243
10.2.4 Libvirt..... 1245
10.3 Docker Containers..... 1256
10.3.1 Introduction to Docker Containers..... 1256
10.3.1.1 Overview..... 1256

10.3.2 Docker How To's....1256
10.3.2.1 Running a webserver container....1256
10.4 NFV OpenStack....1259
10.4.1 OpenStack Nova Overview....1259
10.4.2 Building OpenStack using Flexbuild....1259

Chapter 11 Power Management....1260
11.1 Power management user manual....1260
11.2 CPU Frequency Switching User Manual....1263
11.3 Thermal management user manual....1265
11.4 System Monitor....1267
11.4.1 Power Monitor User Manual....1267
11.4.2 Thermal Monitor User Manual....1270

Chapter 12 PREEMPT_RT Real Time Linux....1273
12.1 PREEMPT_RT Real-Time Linux....1273

Chapter 13 Benchmarking guidelines....1275
13.1 Coremark....1275
13.1.1 Test Environment....1275
13.1.2 Test Procedure....1276
13.2 Dhrystone....1277
13.2.1 Test Environment....1277
13.2.2 Test Procedure....1278
13.3 EEMBC....1280
13.3.1 Test Environment....1280
13.3.2 Test Procedure....1282
13.4 LMBench....1291
13.4.1 Test Environment....1291
13.4.2 Test Procedure....1292

Chapter 14 Connect to cloud: EdgeScale....1294
14.1 What is EdgeScale....1294
14.2 Building EdgeScale client....1294
14.3 Procedure to start EdgeScale....1295

Chapter 15 eIQ Machine Learning Software....1296
15.1 Building eIQ software....1296
15.2 Deploying eIQ software....1297

Chapter 1
About This Document

About QorIQ Layerscape Software Development Kit (LSDK)

LSDK is a complete Linux kit for NXP QorIQ Arm-based SoC's and the reference and evaluation boards that are available for them.

It is a *hybrid form* of a Linux distribution because it combines the following major components to form a complete Linux system.

- NXP firmware components including:
  - Trusted Firmware-A (TF-A), a reference implementation of secure world software for Armv7-A and Armv8-A.
  - NXP peripheral firmware components for DPAA1, DPAA2, and PPFE.
- NXP boot loaders. Two are offered:
  - U-Boot, based on denx.de plus patches.
  - UEFI, based on TianoCore.
- NXP Linux kernel, based on kernel.org upstream plus patches.
- NXP added user space components.
- Ubuntu standard user space file set (user land), including compilers and cross compiler.

The use of NXP LSDK userland is what makes LSDK a hybrid. It is not entirely an LSDK Ubuntu based distribution because it uses an NXP kernel, but it still uses Ubuntu user space files. This hybrid is possible because NXP Arm SoC's are standards-based so programs like bash and thousands of others run without being recompiled.

The benefit of using NXP LSDK userland is the easy availability of thousands of standard Linux user space packages. The experience of using the LSDK is similar to using Ubuntu, but the kernel, firmware, and some special NXP packages are managed separately.

NOTE

For the most up-to-date version of this documentation set, see the Knowledge Center for Layerscape Software Development Kit

NOTE

For brief how-tos for LSDK to help you modify/update individual LSDK components such as, U-Boot, Linux kernel, DPL, DPC, on a reference design board when booting the board from a specific boot source, such as QSPI or SD, see Reference Design Boards How-tos at NXP community.

Accessing LSDK

LSDK is distributed via git. See https://lsdk.github.io/.

There are two ways to use the LSDK, as an integration and as a source of individual components.

LSDK as an integration

Using the link above, notice the `flexbuild` component. You can clone it and run a script to create and install LSDK onto a mass storage device as an integration, ready for use on an NXP reference or evaluation board. You can build NXP components from source using a script called flex-builder or install from binaries of NXP components using flex-installer. See Layerscape SDK user guide.

LSDK as components

The same link shows git repositories for individual components, for example the LSDK Linux kernel. If you clone and examine this git, you will see a conventional kernel source tree. You can compile the kernel using `make` in the normal way, like a kernel.org kernel. However, notice the configuration fragment in a`rch/arm64/configs`. See Linux Kernel.

Having git access to components is helpful if you assemble your own Linux distribution or wish to form a hybrid with a user land other than Ubuntu's.

LSDK git tags

LSDK git repositories use git tags to indicate component revisions that have been release tested together. Use the `git tag` command to examine them and chose a tag to check out.

LSDK Relies on Mass Storage Devices

NXP LSDK userland is very convenient for evaluation because it is possible to use the command `apt-get install` on the standard Ubuntu components you need. It also provides native development tools.

But this richness means that the user space file is large, too large for RAM disks.

Therefore, LSDK requires installation to and use of a mass storage device such as

- SD card
- USB flash drive
- USB hard drive
- SATA drive, spinning, or SSD (for boards with a SATA port)
- eMMC flash (when available on board)

LSDK provides scripts that populate a mass storage device with the needed files. These scripts can run on a Linux PC. It is especially simple to use an SD card or USB flash drive because they are the easiest to move between a Linux PC and the NXP board.

Chapter 2
Acronyms and Abbreviations

Term	Definition
AH	Authentication Header (RFC 4302) – a network protocol designed to provide authentication services in IPv4 and IPv6.
ACL	Access Control List
AMP	Asynchronous Multi-Processing, running multiple operating system images on different processors of the same machine without virtualization.
API	Application Programming Interface
ARP	Address Resolution Protocol
CAAM	Cryptographic Acceleration and Assurance Module
CCSR	Configuration and Control Status Register
CPU	Central Processing Unit, also known more generally as "Processor"
DCD	Device Configuration Data
DCE	Data Compression/Decompression Engine
DMA	Direct Memory Access
DSK	Device Secret Key
DTB	Device Tree Blob—the binary representation of device trees
DTS	Device Tree Syntax—the textual representation of device trees
DUT	Device Under Test
ESP	Encapsulating Security Payload (RFC 4303) – a network protocol designed to provide a mix of security services in IPv4 and IPv6.
EVB	Edge Virtual Bridge
FDB	Forwarding Data Base
FUID	Freescale Unique ID
GPP	General Purpose Processor
Guest/VM	The term ‘Guest’ is used for Linux running inside the virtual machine(s) that are in turn running over Host Linux operating system.VM and Guest have been used interchangeably in this guide.

Table continues on the next page...

Table continued from the previous page...

Term	Definition
GUEST_CONSOLE_TELNET_PORT	Telnet port for accessing guest console of VM.
HAL	Hardware Abstraction Library
HIF	Host Interface
HSM	Hardware security modules
IBR	Internal Boot ROM
IP_ADDR_BRD	This term is used for LS1088ARDB and LS2088ARDB IP address.
IP_ADDR_IMAGE_SERVER	This term is used for IP address of the machine on which all the software images are kept.
IPC	Inter-Process Communication, can be interpreted as being communication between distinct application execution flows or between distinct hardware processing units.
inbound (traffic)	Encrypted traffic which is coming from an unprotected interface. This traffic will be terminated on the CPU.
IPFwd	IPv4 Forward
IPSec	IP Security – a communication standard defined and refined by several public RFCs (such as RFC-2401 and RFC-4301) where hosts exchange encrypted IP data packets.
IPSec Tunnel	A communication convention between two network gateways to IPSec process certain network traffic in a particular way. An IPSec tunnel has two endpoints (which are the gateways), a clearly delimited set of encryption and authentication methods, keys, encapsulation headers and security policies, which define the traffic that is sent through the tunnel.
ISBC	Internal Secure Boot Code
ISR	Interrupt Status Register
ITF	Intent to Fail
ITS	Intent to Secure
KASLR	Kernel Address Space Layout Randomization
KVM	Kernel-based Virtual Machine - A Linux kernel module that allows a user space program access to the hardware virtualization features of NXP processors.
LIODN	Logical I/O Device Number
MC	Management Complex
NAT	Network Address Translation
OEM	Original Equipment Manufacturer

Table continues on the next page...

Table continued from the previous page...

Term	Definition
OS	Operating System
OUID	OEM Unique ID
outbound (traffic)	Clear traffic which is coming from a software application which generates traffic that must be encrypted and forwarded via an unprotected interface.
PAMU	Peripheral Access Management Unit
PBL	Pre-Boot Loader
PCD	Parse, Classify, Distribute – a software architecture concept in NXP DPAA drivers which allows the user to configure the DPAA hardware (FMan) to do frame parsing, classification or distribution on a series of frame queues.
PDCP	Packet Data Convergence Protocol – It is one of the layers of the Radio Traffic Stack in UMTS/LTE and performs IP header compression and decompression, transfer of user data and maintenance of sequence numbers for Radio Bearers which are configured for lossless serving radio network subsystem (SRNS) relocation.
PME	Pattern Matcher Engine
PKCS	Public-Key Cryptography Standards
QEMU	Quick EMUlator - A hosted hypervisor that performs hardware virtualization.
RC	Route Cache
RCW	Reset Configuration Word
RFC	Request for Comments – a public document which describes a software standard.
RDB	Reference Design Board
SA	Security Association – a data record, defined by RFC 4301, which stores the information related to the IPSec processing needed for a specific network traffic type (such as encryption/decryption keys and algorithms, traffic endpoints description, authentication algorithms, and so on).
SAD	Security Association Database – the database holding all the valid SAs in a system.
SDK	Software Development Kit
SEC	Security Engine Coprocessor – a DPAA hardware block performing cryptographic acceleration and offloading hardware.
SFP	Secure Fuse Processor
SIP DIP	Source Internet Protocol and Destination Internal Protocol
SKMM	Secure Key Management Module

Table continues on the next page...

Table continued from the previous page...

Term	Definition
SMP	Symmetric Multi-Processing, running an operating system image on multiple CPUs simultaneously.
SNVS	Secure Non-Volatile Storage
SoC	System on a Chip, a chip integrating one or more processors and on-chip peripherals.
SP	Security Policy – a set of rules that network traffic must comply with in order to be eligible for IPSec processing.
SPD	Security Policy Database – the database storing all the SPs in a system.
SRE	Stateful Rule Engine
SRK	Super Root Key
SRKH	Super Root Key Hash
STP	Spanning Tree Protocol
SUI	String Under Inspection
TF-A	Trusted Firmware-A
TFTP_BASE_DIR	Base directory of TFTP server where all the images are kept.
TLB	Translation Lookaside Buffer
TTL	Time To Live
UDP	User Datagram Protocol
UID	Unique Device ID
UIO	User space I/O
VEB	Virtual Ethernet Bridge
VEPA	Virtual Ethernet Port Aggregator
VID	Voltage IDentifier

Chapter 3
Release Notes

3.1 What's New

What's New in LSDK 20.04-update-290520

Highlights

- The release was made specifically for LX2160A rev2. LTS 5.4.3 and LTS 4.19-rt were validated.
- DDR PHY firmware update 2019.04
- Pre-built images for LX2160A rev2 update
  - Use this command in flex-installer

```
flex-installer -i auto -m lx2160ardb_rev2 -u http://www.nxp.com/lgfiles/sdk/lsdk2004-
update-290520 -d /dev/sdx
```

- Inclusion of the partial workaround for SDHC 3.3v IO cell reliability issue
- Inclusion of the fix to set IBE register enable GPIO inputs
- TMU driver update
- Inclusion of the workaround for ARM Errata A-050426

What's New in LSDK 20.04

Highlights

- Support of the dual kernel, LTS 4.19.90 and LTS 5.4.3
- U-Boot v2019.10 update
- Integration of LX2160A rev2.0
- Support of DPDK 19.11, OVS 2.13
- Support of Felix DSA driver on LS1028A
- Support of PREEMPT_RT on LTS 4.19-rt
- Support of QEMU 4.1
- Refer to Fixed, open, and closed issues which has a list of all fixed issues
- Inclusion of additional workarounds for Chip Errata: A-009450, A-050385

List of changes:

Processor and Board Support

- LX2160A rev2.0

NXP LSDK Userland

- No change since the last LSDK

Linux Kernel Core, Virtualization

- LTS kernel 4.19.90 update
- LTS kernel 5.4.3
- Support of PREEMPT_RT on branch linux-4.19-rt

- Support of QEMU 4.1

Linux Kernel Drivers

- DPAA2: bulk enqueue and ring mode in QBman
- eMMC HS400 on LS1028A RDB
- Felix switch: 1588/802.1AS, DSA support, TSN support
- GIC: workaround for LPI reset issue on LTS 4.19
- SBSA watchdog on LX2160A

Data Plane Development Kit (DPDK)

- Support of DPDK 19.11
- Support of LX2160A rev2.0
- Support of flow director on DPAA2

Virtualization - OVS-DPDK

- Support of OVS 2.13

Trust Firmware - A (TF-A)

- No change since the last LSDK

U-Boot Boot Loader

- U-Boot v2019.10 update
- Support of LX2160A rev2.0
- EMMC boot on LX2160A RDB
- Felix switch: QXGMII 2.5G

Unified Extensible Firmware Interface (UEFI)

- No change since the last LSDK

EdgeScale – Edge Compute

- Secure Manufacturing
  - No change since the last LSDK
- EgdeScale Device Agent Enhancement
  - No change since the last LSDK

Other Tools and Utilities

- Flexbuild
  - Support of LX2160A rev2.0
  - Support of cross-build for eIQ packages
- GPU module 6.4.0 update
- MC 10.20.4 update. Changes are listed on https://github.com/NXP/qoriq-mc-binary/blob/integration/CHANGELOG.md
- OpenSSL 1.1.1: engine-devcrypto offload support only on LTS 4.19 on DPAA1 platforms
  - TLS 1.1: AES128-SHA1, AES256-SHA1
  - TLS 1.2: AES128-SHA256, AES256-SHA256
- Restool: debug support

What's New in LSDK-19.09-update-291119 and LSDK-19.09-update-311219

Highlights

- Including the fixes of PLATSEC-825, QLINUX-11230 and QLINUX-12977. Refer to Fixed, open, and closed issues which has a list of all fixed issues
- Flexbuild.tgz file being updated with tag LSDK-19.09-update-291119 and LSDK-19.09-update-311219. Refer to How to build LSDK with Flexbuild for re-generating the composite firmware

What's New in LSDK 19.09

Highlights

- Support of the dual kernel, LTS 4.14.140 and LTS 4.19.68
- Integration of LS1028A r1.0
- eIQ machine learning applications and demos being enabled on LS1046A and LX2160A
- MC 10.18.0 update
- OpenSSL 1.1.1d update without TLS offload support
- Support of OTA with single boot source in EdgeScale
- Support of PREEMPT_RT on LS1043A RDB and LX2160A RDB on branch linux-4.14-rt
- Support of Ptp4l in DPDK
- Tiny userland being updated Inclusion of several software fixes.
- Refer to Fixed, open, and closed issues which has a list of all fixed issues
- Inclusion of additional workarounds for Chip Errata: A-011334, A-050086

List of changes:

Processor and Board Support

- LS1028A r1.0, RDB
  - Core: 1500 MHz, DDR: 1600 MT/s, Platform: 400 MHz [default]
  - Core: 1300 MHz, DDR: 1600 MT/s, Platform: 400 MHz
  - Core: 800 MHz, DDR: 1300 MT/s, Platform: 400 MHz

NXP LSDK Userland

- Tiny userland being updated

Linux Kernel Core, Virtualization

- LTS kernel 4.14.140 update
- LTS kernel 4.19.68 update
- Support of PREEMPT_RT on LS1043A RDB and LX2160A RDB on branch linux-4.14-rt

Linux Kernel Drivers

- DPAA2: displaying learned FDB entries
- LS1028A: CAN, Clock, DDR4, DSPI, eDMA, eMMC, eSDHC, FlexSPI access to NOR flash, GIC, GPIO, I2C, IEEE1588, MDIO PHY, Multi-media: GPU, LCD, eDP/DP, Networking interfaces: ENETC, L2Switch, OCRAM, PCIe Gen3 root complex, Power Management, QDMA, SATA, SEC, SMMU, Integrated Interchip Sound (I2S) / Synchronous Audio Interface (SAI), Time Sensitive Network (TSN) over ENETC and L2Switch, UART, USB, Watchdog
- Support of edge-level interrupts in GPIO

Data Plane Development Kit (DPDK)

- Support of LS1028A RDB

- Support of multi process support for (QDMA/SEC) on DPAA2
- Support of PDCP on LS1046A, LS2088A and LX2160A
- Support of SEC scatter/gather Support of ptp4l

Virtualization - OVS-DPDK

- No change since the last LSDK

Trust Firmware - A (TF-A)

- Support of LS1028A RDB

U-Boot Boot Loader

- LS1028A: Boot from FlexSPI NOR flash and SD, clock, DDR4, eDP/DP firmware loading, eSDHC & eMMC, FlexSPI access to NOR flash, GIC, I2C, MDIO PHY, Networking: ENETC and L2switch, OCRAM, PCIe, SATA, TSN, UART, USB

Unified Extensible Firmware Interface (UEFI)

- No change since the last LSDK

EdgeScale – Edge Compute

- Support of LS1028A RDB
- Secure Manufacturing
  - Support of OTA with single boot source
- EgdeScale Device Agent Enhancement
  - No change since the last LSDK

Other Tools and Utilities

- eIQ machine learning applications and demos being enabled on LS1046A and LX2160A
  - OpenCV 4.0.1
  - Arm Compute Library 19.02
  - Arm NN 19.02
  - TensorFlow 1.12
  - TensorFlow Lite 1.12
- Flexbuild
  - Support of LS1028A RDB
  - Tiny userland being updated
- MC 10.18.0 update. Changes are listed on https://github.com/NXP/qoriq-mc-binary/blob/integration/CHANGELOG.md
- OpenSSL 1.1.1d update without TLS offload support
- Platform Security
  - OP-TEE: support of LS1028A RDB
- Restool
  - Support for option DPRC_CFG_OPT_PL_ALLOWED
- TSN
  - Time Sensitive Network (TSN) support
    - TSN configuration tool
    - ENETC 1588 two steps timestamping

- ENETC TSN driver
- SWITCH TSN driver

What's New in LSDK 19.06

Highlights

- Support of the dual kernel, LTS 4.14.122 and LTS 4.19.46
- U-boot v2019.04 uprev
- The distribution of NXP LSDK Userland including Ubuntu main packages and NXP packages
- Integration of LS1046A FRWY
- Base platform boot with ACPI on LX2160A RDB. Refer to Chapter 5.4 UEFI for the list of supported features
- No formal support of 32-bit kernel space on 64-bit devices
- Removal of Linux backplane driver, which will be releases separately
- Support of DPDK 18.11, OVS 2.11, Pktgen 3.6.6 and VPP 19.01
- Flexbuild: support of new layout of SD partitions and auto deployment, support of automatic download and deployment of distro images and more than 5 partitions based on 4 KiB limitation of partition table for SD boot
- MC 10.16.2 update
- Inclusion of fixes for Linux TCP DoS Attack - SACK CVE 2019-11477
- Inclusion of several software fixes. Refer to Fixed, open, and closed issues which has a list of all fixed issues
- Inclusion of additional workarounds for Chip Errata: A-008098, A-009460, A-010131, A-010635, A-011270, A-050106

List of changes:

Processor and Board Support

- LS1046A FRWY

NXP LSDK Userland

- The distribution of NXP LSDK Userland including Ubuntu main packages and NXP packages

Linux Kernel Core, Virtualization

- LTS kernel 4.14.122 update
- LTS kernel 4.19.46 update

Linux Kernel Drivers

- DPAA1.x QBMan kexec support
- IEEE1588: linuxptp replacing ptpd2 for testing
- Inclusion of fixes for Linux TCP DoS Attack - SACK CVE 2019-11477
- LX2160A: CEETM, CPU idle
- LS1046A FRWY: Clock, eDMA, Ethernet, GIC, I2C, micro-SD, NAND, OCRAM, PCIe-Gen3 RC, QSPI access to NOR flash, QDMA, SEC, UART, USB

Data Plane Development Kit (DPDK)

- Support of DPDK 18.11
- Support of LS1046A FRWY
- Support of Pktgen 3.6.6
- Support of VPP 19.01

Virtualization - OVS-DPDK

- Support for LS1046A FRWY
- Support for OVS 2.11

Trust Firmware - A (TF-A)

- Support of LS1046A FRWY

U-Boot Boot Loader

- U-Boot v2019.04 update
- LS1046A FRWY: Boot from QSPI NOR flash and micro-SD, clock, DDR4, Ethernet, GIC, I2C, NAND, OCRAM, PCIe-Gen3, USB, UART
- LX2160A: Negate IRQ signal in GIC for AQR107 interrupt pins

Unified Extensible Firmware Interface (UEFI)

- LX2160A: Base platform boot with ACPI on RDB. Refer to Chapter 5.4 UEFI for the list of supported features

EdgeScale – Edge Compute

- Support of LS1046A FRWY
- Secure Manufacturing
  - Key and fuse config management
  - Device enrollment with fused device identity
- EgdeScale Device Agent Enhancement
  - Reconnecting cloud when network is down and up
  - Keeping docker images during OTA updates

Other Tools and Utilities

- Flexbuild
  - Flex-builder
    - Support of new layout of SD partitions and auto deployment
    - Support of docker-ce arm32 and arm64 built from source instead of apt installation
    - Support of the uprev of dpdk, ovs-dpdk, pktgen_dpdk and vpp
    - Support of multiple scales of LSDK userland (main, edgescale, etc.)
    - Optimization of building for secure boot Chain of Trust with confidentiality
    - Removal of ARMv8 32bit
  - Flex-installer
    - Support of automatic download and deployment of distro images
    - Support of more than 5 partitions based on 4 KiB limitation of partition table for SD boot
    - Support of configurable multiple partitions with ‘-p <partition-list>’ option in flex-installer cmdline
    - Support of dual system boot on single storage device
- MC 10.16.2 update
- Soft Parser Configuration Tool
  - Support of 'load-on-parser' and 'load-protocol' option

What's New in LSDK 19.03

Highlights

- Support of the dual kernel, LTS 4.14.104 and LTS 4.19.26. LTS 4.9 is not tested in this release and under maintenance mode
- Integration of LX2160A
- Inclusion of Spectre V2 patches in Linux, Spectre V4 patches in TF-A
- Integration of DCE lib 2.0
- MC 10.14.3 update
- OP-TEE 3.4.0 update
- Full SMMU support on LS1043A and LS1046A when using upstream flavor of DPAA1 drivers
- Inclusion of several software fixes. Refer to Fixed, open, and closed issues which has a list of all fixed issues
- Inclusion of additional workarounds for Chip Errata: A-008098, A-008850 on LS1021A, A-009531, A-110311 on LX2160A

List of changes:

Processor and Board Support

- LX2160A RDB
- LS1043ARDB-PD with NAND and EEPROM model updated

NXP LSDK Userland

- No change since the last SDK

Linux Kernel Core, Virtualization

- LTS kernel 4.14.104 update
- LTS kernel 4.19.26
- Inclusion of Spectre V2 patches
- LX2160A: KVM, Guest Virtual Machines, Virtio-net, Docker Containers

Linux Kernel Drivers

- DPAA2 Ethernet: using FQID instead of QDID for frame enqueue, allocating one page for each ingress frame
- LX2160A: CAAM, Clock, UART, DDR4, eSDHC, eMMC, GIC, I2C, OCRAM, PCIe (EP, RC, MSI), USB, SATA, Flexspi access to NOR flash, LPM20, Networking interfaces (RGMII, SGMII, UXGMII, XFI, XLAUI4, 25G-AUI), WRIOP, QBMAN, MDIO, QDMA
- Full support of SMMU on LS1043A and LS1046A when using upstream flavor of DPAA1 drivers

Data Plane Development Kit (DPDK)

- DPAA1: changing default FMC mode to FMC script
- DPAA2: Support for Multi-process Applications
- Support of QDMA Demo application (mem-to-mem mode)
- LX2160A: l2fwd, l3fwd, l2fwd_crypto, ipsecgateway

Virtualization - OVS-DPDK

- Support for LX2160A
- Support for OVS 2.10.2

Trust Firmware - A (TF-A)

- Inclusion of Spectre V4 patches
- LX2160A: LPM20

U-Boot Boot Loader

- LX2160A: non-secure boot and secure boot, boot from flexspi NOR and SD, Clock, UART, DDR4, eSDHC, eMMC, GIC, I2C, OCRAM, PCIe (RC), USB, SATA (one controller support), Flexspi access to NOR flash, MDIO, Networking interfaces (RGMII, SGMII, UXGMII, XFI, XLAUI4, 25G-AUI), Voltage ID
- Support of 128MB and 256MB MC size [256MB on LX2160A]
- Support of QSFP detection and autoconfig for CS4223 PHY [LX2160A]
- Full support of SMMU on LS1043A and LS1046A

Unified Extensible Firmware Interface (UEFI)

- LX2160A: non-secure boot, boot from flexspi NOR flash, UART, Clock, DDR4, SD, FAT32 filesystem, I2C, RTC, SATA, USB, XFI, SMP Linux boot via EFI_STUB on SD card, MC High Memory

EdgeScale – Edge Compute

- Support of LX2160A RDB

Other Tools and Utilities

- DCE
  - Integration of DCE lib 2.0
  - Simple DCE example application
- Flexbuild
  - Support of DHCP distro boot
  - Support of LX2160A
  - Support of OpenStack-Nova
- MC update to 10.14.3
- Platform Security
  - OP-TEE update to 3.4.0
- Restool
  - Adding --num-cgs as a dpni create option

What's New in LSDK 18.12

Highlights

- LTS 4.9.140 and LTS 4.14.83 update
- U-boot v2018.09 update
- TFA firmware (LSDK 18.12 onward) replaces PPA firmware (LSDK 18.09) as trusted firmware in U-Boot boot flow
- Bootflow is changed. See Bootloaders for details
- Support of LS1012A FRWY RevC with 1GB Kingston DDR
- Support of LS1012A FRWY and LS1021A TWR on EdgeScale
- Support of PREEMPT_RT on LS2088A on LTS 4.14
- Support of Soft Parser Configuration Tool
- MC 10.12.0 update
- UEFI to adopt EDK2 project development
- Includes several software fixes. Refer to Fixed, open, and closed issues which has a list of all fixed issues

List of changes:

NXP LSDK Userland

- Netplan to control ethernet interfaces

Linux Kernel Core, Virtualization

- LTS kernel 4.9.140 update
- LTS kernel 4.14.83 update
- Support of PREEMPT_RT on LS2088A on LTS 4.14

Linux Kernel Drivers

- DPAA2 CAAM: support of fixed-link settings based on DPC config,
- DPAA2 Ethernet: support of flow steering on LS1088A
- PPFE Ethernet: support of fixed link
- TMU: support of multiple sensors
- Unified backplane driver to support 10Gbase-KR

Data Plane Development Kit (DPDK)

- No change since the last LSDK

Virtualization - OVS-DPDK

- No change since the last LSDK

Trust Firmware - A (TF-A)

- Support of LS1012A, LS1043A, LS1046A, LS1088A and LS2088A
- Power Management
- OP-TEE OS binary

U-Boot Boot Loader

- U-boot v2018.09 update
- Support of loading Soft Parser from U-boot using MC
- Support of TF-A, making common RAM defconfig for all boot sources

Unified Extensible Firmware Interface (UEFI)

- Adoption of EDK2 project development
- Support of TF-A

EdgeScale – Edge Compute

- Support of LS1012A FRWY and LS1021A TWR
- Secure Manufacturing
  - No change since the last LSDK
- Secure Provisioning
  - No change since the last LSDK
- EdgeScale Dashboard for Users
  - Device management
    - Self-check diagnostic tool
    - Support of de-commission/EoL/un-enroll a device

- Application management
  - No change since the last LSDK

Other Tools and Utilities

- Flexbuild
  - Removal of LS1088A RDB from the default images, keeping LS1088A RDB-PB
  - Running FMC during system initialization
  - Support of iperf version 2.0.13a
  - Support of Soft Parser Configuration Tool
  - Support of TF-A
- MC upgrade to 10.12.0
- Platform Security
  - PKCS#11 Library: support of Cryptographic APIs, C_GenerateKeyPair, C_CreateObject, C_DestroyObject APIs, C_InitToken, C_InitPin, C_SetPin, C_Login, C_LogOut APIs
- RCW
  - Support of TF-A
- Soft Parser Configuration Tool

What's New in LSDK 18.09

Highlights

- LTS 4.9.124 and LTS 4.14.67 update
- EdgeScale enabled on LS1088A and LS2088A, and more functional updates
- OpenSSL v1.1 validated
- OP-TEE and fuse provisioning enabled on LS1088A and LS2088A
- Support of IMA-EVM on LTS 4.14
- Support of LS1012AFRWY with 1GB DDR
- Support of LS1088ARDB-PB
- Support of PREEMPT_RT on LS1046A and LS1088A on LTS 4.14
- Support of VPP in DPDK
- Includes several software fixes. Refer to Fixed, open, and closed issues which has a list of all fixed issues
- Includes additional workarounds for Chip Errata: A-008708, A-011379

List of changes:

NXP LSDK Userland

- OpenSSL v1.1 validated

Linux Kernel Core, Virtualization

- LTS kernel 4.9.124 update
- LTS kernel 4.14.67 update
- Support of PREEMPT_RT on LS1046A and LS1088A on LTS 4.14

Linux Kernel Drivers

- DPAA1 Ethernet: 10Gbase-KR on LS1046A, jumbo frames enabled on LS1043

- DPAA2 CAAM: update to the latest MC f/w dpseci API, skcipher API and IV in DMAable buffer
- Support of IMA-EVM on LTS 4.14

Data Plane Development Kit (DPDK)

- Performance tuning
- Support of 3DES algorithm in ipsecgw
- Support of PCI to DPAA interworking
- Support of VPP

Virtualization - OVS-DPDK

- No change since the last LSDK

U-Boot Boot Loader

- Environment variables of MAC address to set the DPMAC MAC address for use by Linux
- Support of LS1012AFRWY with 1GB DDR

Unified Extensible Firmware Interface (UEFI)

- No change since the last LSDK

EdgeScale – Edge Compute

- Support of LS1088A and LS2088A
- Secure Manufacturing
  - No change since the last LSDK
- Secure Provisioning
  - Solution signature verification before install on the device
  - Signature and device certificate using OEM’s root CA
- EdgeScale Dashboard for Users
  - Device management
    - Secure device enrollment
    - EdgeScale client agents in a debian pkg
    - Support of call home to get service endpoints for device
  - Application management
    - Support app/container signature
    - Support integration of private container repo
    - Support enrollment of new app

Other Tools and Utilities

- Flexbuild
  - Docker installation using docker-ce
  - OP-TEE disabled by default
  - Support of IMA-EVM
  - Support of OpenSSL v1.1, removal of OpenSSL v1.0
- FMC: support for cleanup of last FMC settings
- Linux Fman-IM driver as module

- MC upgrade to 10.10.0
- Platform Security
  - Fuse provisioning on LS1088A, LS2088A
  - OP-TEE client: support of LS1088A, LS2088A
  - PKCS#11 Library: support for ECC 256/384 keys
  - Support of IMA-EVM
- PPA
  - No change since the last LSDK
- RCW
  - Support of LS1088ARDB-PB

What's New in LSDK 18.06

Highlights

- Spectre and Meltdown security patches included on LTS-4.9, LTS-4.14 and PPA. Further information will be available on “Security Updates” https://nxp.sdlproducts.com/LiveContent/web/ui.xql?action=html&resource=publist_home.html
- Removal of ODP from LSDK 18.06 and future releases.
- U-Boot v2018.03 update
- Ubuntu userland 18.04 update
- Secure provisioning being integrated into EdgeScale
- Support of FRWY-LS1012A board
- Support of Data Compression Engine
- Support of Direct device assignment using VFIO for DPDK in VM on DPAA2
- Includes several software fixes. Refer to Fixed, open, and closed issues which has a list of all fixed issues
- Includes additional workarounds for Chip Errata: A-010843

List of changes:

NXP LSDK Userland

- Ubuntu userland 18.04 update
- Toolchain: gcc: Ubuntu/Linaro 7.3.0-16ubuntu3~18.04, glibc-2.27, binutils-2.30-0, gdb-8.1
- Libvirt 4.0
- QEMU 2.11

Linux Kernel Core, Virtualization

- LTS kernel 4.9.105 update
- LTS kernel 4.14.47 update
- Spectre and Meltdown security patches
- Enabling VFIO no-IOMMU being documented

Linux Kernel Drivers

- DPAA2 Ethernet: CEETM, MQPRIO qdisc support, configurable RX hashing key
- FRWY-LS1012A: CAAM, DDR, DUART, I2C, PCIe, PFE ethernet, SAI/I2S, SD, USB, Watchdog

Data Plane Development Kit (DPDK)

- Support of Direct device assignment using VFIO for DPDK in VM [DPAA2 processors]
- PFE with DPDK [LS1012A]
- Running DPDK over docker
- UEFI boot [DPAA1 & DPAA2 processors]
- QDMA driver support [DPAA2 processors]

Virtualization - OVS-DPDK

- No change since the last LSDK

Open Data Plane (ODP)

- ODP support being removed from LSDK 18.06 and future releases

U-Boot Boot Loader

- U-Boot v2018.03 update
- FRWY-LS1012A: Non-secure boot, Secure Boot, Clock, DDR, DUARt, I2C, PCIe, QSPI, SD, USB, Watchdog
- Support of LS2088A 0.9v part

Unified Extensible Firmware Interface (UEFI)

- Support of AIOP application

EdgeScale – Edge Compute

- Secure Manufacturing
  - Tools being available for Secure Fuse provisioning
- Secure Provisioning
  - Secure library integration
- EdgeScale Dashboard for Users
  - Device management
    - Agent to report more 'status' information of devices
    - Device Logs on cloud
    - OTA: firmware update [LS1012A]
    - Support of un-enrolling device
  - Application management
    - App arguments at deployment time
    - Support of public and private apps

Other Tools and Utilities

- Support of Data Compression Engine in user space
- Flexbuild
  - Disabling ODP
  - Ubuntu-18.04 arm32 and arm64 filesystem support
  - Programming separate images into QSPI and NOR flash
- MC upgrade to 10.8.0
- OP-TEE client: FRWY-LS1012A support
- PKCS#11 Library

  - Support for Multithreaded Applications
  - Integration with PKCS#11 OpenSSL Engine from OpenSC/libp11
- PPA
  - HW generated key for OP-Tee
  - Support of FRWY-LS1012A
- RCW
  - Support of FRWY-LS1012A
  - Support of LS2088A ar core frequency 2.1GHz
- Restool: Removal of DPNI_OPT_SINGLE_SENDER and 16 TCs

What's New in LSDK 18.03

Highlights

- Switching the dual kernel version to LTS 4.9.79 and LTS 4.14.16. LTS 4.4 is not tested in this release and under maintenance mode
- U-Boot v2017.11 update
- LS2084A and LS2088A top bin and non-E part
- Direct device assignment in guest kernel on LTS 4.14 [DPAA2 processors]
- Support for edge compute on EdgeScale, including secure manufacturing, secure keys, EdgeScale dashboard for users and application management
- MC upgrade to 10.6.0
- Python scripts to generate RCW binaries for LS1012A, LS1088A and LS2088A
- Support for DPDK 17.11 as base and OVS 2.9
- Includes several software fixes. Refer to Fixed, open, and closed issues which has a list of all fixed issues
- Includes additional workarounds for Chip Errata: A-008851, A-009611, A-009668, A-010131, A-010477, A-010843, A-011026

NXP LSDK Userland

- No change since the last LSDK

Linux Kernel Core, Virtualization

- LTS kernel 4.9.79 update
- LTS kernel 4.14.16
- Direct device assignment in guest kernel on LTS 4.14 [DPAA2 processors]
- QEMU
  - QEMU 2.9
  - MC portal emulation

Linux Kernel Drivers

- DPAA2 CAAM: generic gcm(aes), IPsec GCM - rfc4106
- DPAA2 Ethernet: XDP, L2Switch driver update to switchdev version
- USB: U1/U2 mode in host

Data Plane Development Kit (DPDK)

- Support of DPDK 17.11 as base
- Support of LTS 4.14
- AIOP cmdif support
- Ethernet poll mode driver with push mode queues, Crypto - Scatter Gather support, Eventde driver, tail drop using WRED - CGR [DPAA1 processors]
- IPSEC protocol offload support
- KNI support
- PKTGEN 3.4.8

Virtualization - OVS-DPDK

- Support of OVS 2.9

U-Boot Boot Loader

- U-Boot v2017.11
- Support for IFC and EMMC switch support in qixis [LS1088A]

Unified Extensible Firmware Interface (UEFI)

- No change since the last LSDK

EdgeScale – Edge Compute

- Secure Manufacturing
  - Tools available for Secure Fuse provisioning [LS1012A, LS1043A, LS1046A]
- Secure Keys [LS1046A]
  - Support of API's to import/generate RSA keys securely
  - Support of PKCS#11 interface for Ssigning operations
  - Support of OPENSSL engine to access these keys
- EdgeScale Dashboard for Users
  - Device management
    - Secure device enrolment
    - Secure key/certificate provisioning
    - OTA: firmware update [LS1043, LS1046]
    - Device status monitoring
  - Application management
    - Dynamic deployment of container-based applications

Other Tools and Utilities

- AIOPSL
  - AIOP boot error handling, error frame handling, TX buffer layout
  - API for configuring timestamp passing behavior inside a recycle path flow
  - ASA opaque
  - User-defined exception handler
- MC upgrade to 10.6.0
- RCW

— LS2084A and LS2088A top bin and non-E part

— Python scripts to generate RCW binaries for LS1012A, LS1088A and LS2088A

What's New in LSDK 17.12

Highlights

- Support for 2.5G PFE MAC [LS1012A]
- MC upgrade to 10.4.0
- Support for DPDK 17.05.02 as base and OVS 2.8
- Support for sleep (LPM20) [LS1088A, LS2088A]
- Integration of Open Portable Trusted Execution Environment (OP-TEE) [LS1046A]
- Includes several software fixes. Refer to Fixed, open, and closed issues which has a list of all fixed issues
- Includes additional workarounds for Chip Errata: A-008708, A-008428, A-008822, A-009007, A-009668, A-009611, A-009810, A-010151, A-010554, A-010650

Linux Kernel Core, Virtualization

- LTS kernel 4.4.98 update
- LTS kernel 4.9.62 update

Linux Kernel Drivers

- DPAA2 CAAM: Hashing
- DPAA2 Ethernet: Priority Flow Control
- OP-TEE driver [LS1046A]
- PFE: 2.5G MAC [LS1012A]

U-Boot Boot Loader

- HW load/store prefetch being disabled
- PFE: 2.5G MAC [LS1012A]

Unified Extensible Firmware Interface (UEFI)

- MC High Mem Support

Data Plane Development Kit (DPDK)

- DPDK 17.05.02 as base
- DPDK on docker [DPAA2 processors]
- UEFI support on LS2088A

Virtualization - OVS-DPDK

- OVS 2.8

Other Tools and Utilities

- MC upgrade to 10.4.0
- OP-TEE client [LS1046A]
- PPA: sleep (LPM20) [LS1088A, LS2088A], OP-TEE OS binary [LS1046A]
- Restool Bourne shell (sh) compatible

What's New in LSDK 17.09-Update-103017

Highlights

- LS1012A r1.0 and r2.0, LS1012A RDB at core frequency 1GHz by default
- MC upgrade to 10.3.4 to support 1000base-X and SGMII phyless
- Integration of PPFE driver
- Integration of CAAM DMA driver
- Including software fixes for LS2088A secure boot, MC failure to clear memory after use on LS1088A, fixup of MAC address in DPC on LS1088A

Processor and Board Support

- LS1012A r1.0 and r2.0
- LS1012A RDB at core frequency 1.0GHz by default

Linux Kernel Drivers

- LS1012A: Crypto driver supporting SEC 5 (CAAM), CAAM DMA, DDR, DUART, DSPI, eSDHC, I2C, PCIe RC, PFE Ethernet (Packet Rx/Tx), PHY support: RGMII & SGMII, Power management, QSPI, SAI/I2S, SATA, UART, USB 2/3 mass storage, Watchdog

U-Boot Boot Loader

- LS1012A: Non-secure boot, Secure Boot (silicon r1.0), Clock, CPLD, DDR4, DSPI, eSDHC, I2C, Generic Timers, PCIe, Primary Protected Application (PPA) firmware integration, QSPI, SATA, UART

Other Tools and Utilities

- MC upgrade to 10.3.4 to support 1000base-X
- Supporting multiple versions of docker image in Flexbuild

What's New in LSDK 17.09

Highlights

- LTS kernel 4.9.35, including KASLR
- U-Boot 2017.07
- MC 10.3.2 update
- Support for DPDK 17.05 as base and OVS 2.7
- Flexbuild to support dual kernel build for 4.4 and 4.14
- Includes several software fixes. Refer to Fixed, open, and closed issues which has a list of all fixed issues
- Includes additional workarounds for Chip Errata: A-007815, A-007997, A-010053, A-010151, A-010477, A-010571

Processor and Board Support

- LS1043ARDB-PD

Linux Kernel Core, Virtualization

- LTS kernel 4.9.35, including KASLR
- LTS kernel 4.4.80 update
- LXD and LXD-Bridge

Linux Kernel Drivers

- DPAA2 Ethernet: 10G-base-KR

- RTC: adding PCF85263
- TMU on LS1088A

Data Plane Development Kit (DPDK)

- DPDK 17.05 as base
- Support for MC 10.3.x

Virtualization - OVS-DPDK

- OVS-DPDK 2.7

U-Boot Boot Loader

- U-Boot 2017.07
- Chain of trust with confidentiality as part of distro boot
- LS1088A: QSPI boot, SD secure boot

Unified Extensible Firmware Interface (UEFI)

- Adding kernel 4.14 support
- KASLR support
- L2 cache Prefetch enable/disable support on LS2088A
- Ubuntu Distro boot support.
- USB 3.0 on LS2088A

Other Tools and Utilities

- AIOPSL: IPv6 Reassembly Atomic Fragment, QoS
- FLIB: AES-CTR algorithm, AES-GCM algorithm
- MC 10.3.2 update
- Flexbuild
  - Dual Kernel build for 4.4 and 4.14
  - Enhanced component's repository management to support single repository in one single command
  - Encapsulation and decapsulation feature for secure boot
  - Removing dpdk-extras repository
  - Adding lttng-modules repository
  - Renaming `flex_installer_<arch>.itb` to `flex_linux_<arch>.itb`

What's New in LSDK 17.06

Highlights

- LTS kernel 4.4.65, including KASLR
- U-Boot 2017.03
- Unified memory map
- Unified Extensible Firmware Interface (UEFI) Spec 2.6 on LS1043A RDB, LS1046A RDB and LS2088A RDB
- Ubuntu host 16.04, root filesystem and toolchain 5.4 verified, not shipped in this release
- Flexbuild to build component and generate the boot firmware, flex_installer.itb and the Ubuntu userland containing the specified packages and applications

- Integrating LS1088A BSP v0.4
- LS2088A r1.1 silicon
- MC 10.2.2 update
- FLIB update
- Release on https://lsdk.github.io/
- Includes several software fixes. Refer to Fixed, open, and closed issues which has a list of all fixed issues
- Includes additional workarounds for Chip Errata: A-010160, A-010679, A-010840

Processor and Board Support

- LS1088A r1.0 and Rev. B RDB
- LS2088A r1.0, LS2088A r1.1 and Rev. F RDB

NXP LSDK Userland

- Ubuntu host 16.04
- Toolchain: gcc: Ubuntu/Linaro 5.4.0-6ubuntu1~16.04.4, glibc-2.26.1, binutils-2.23-0, gdb-7.11.1
- Linux Containers (LXC)
- QEMU 2.5

Linux Kernel Core, Virtualization

- LTS kernel 4.4.65, including KASLR

Linux Kernel Drivers

- LS1088A: DUART, DDR4, I2C, PCIe, SATA, USB, SD, MMC, NAND, Networking support, SEC
- CAAM: RSA form 1/2/3, TLS 1.0

Data Plane Development Kit (DPDK)

- Integrating LS1088A

Virtualization - OVS-DPDK

- Integrating LS1088A

U-Boot Boot Loader

- U-Boot 2017.03
- Unified memory map
- LS1088A: DUART, DDR4, I2C, PCIe, SATA, USB, SD, MMC, NAND flash, Networking support, Boot from SD
- LS2088A: QSPI boot

Unified Extensible Firmware Interface (UEFI)

- LS1043A, LS1046A, LS2088A
- Spec 2.6
- DDR4, DUART, DSPI, GPIO, I2C, IFC, PCIe, RTC, SATA, SD, Networking support, Watchdog
- PPA integration
- SMP Linux boot via EFI_STUB on SD card
- PXE boot via PCIe and DPAA interfaces
- QSPI boot

Other Tools and Utilities

- LS1088A: Primary Protected Application (PPA) firmware
- MC 10.2.2 updates
- FLIB: CAPWAP DTLS, L2 header copy
- Flexbuild to build component and generate the boot firmware, flex_installer.itb and the Ubuntu userland containing the specified packages and applications

3.2 Components

Overall

- NXP LSDK userland
- Linux Kernel and Virtualization
- Linux Kernel Drivers
- Data Plane Development Kit (DPDK)
- Virtualization - OVS-DPDK
- Trust Firmware - A (TF-A)
- U-Boot Boot Loader
- Unified Extensible Firmware Interface (UEFI)
- EdgeScale – Edge Compute
- Other Tools and Utilities

NXP LSDK userland

- NXP LSDK Userland including Ubuntu main packages and NXP packages
- Toolchain: gcc: Ubuntu/Linaro 7.3.0-16ubuntu3~18.04, glibc-2.27, binutils-2.30-0, gdb-8.1
- Libvirt 4.0
- Linux Containers (LXC)
- OpenSSL 1.1.1d on LTS 4.19 [DPAA1 processors]
- QEMU 4.1

Linux Kernel Core and Virtualization

- LTS kernel 4.19.90, including KASLR
- LTS kernel 5.4.3, including KASLR
- Arm Cortex-A7 (AARCH32), Cortex-A53 and Cortex-A72 (AARCH64), Little Endian (default)
- 32-bit effective kernel addressing [Cortex-A53, Cortex-A72]
- 64-bit effective addressing [Cortex-A53, Cortex-A72]
- Direct device assignment in guest kernel [DPAA2 processors]
- Kexec support [except for LS1021A and DPAA1 platforms]
- Huge Pages (hugetlbfs)
- KVM and Containers
- LXD and LXD-Bridge
- PREEMPT_RT on LTS 4.19.90-rt35 [LS1043A, LS1046A, LS1088A, LS2088A, LX2160A]

Linux Kernel Drivers

- Customer Edge Egress Traffic Management (CEETM)

- Crypto driver via SEC 5 & 6 (CAAM)
- CAAM DMA
- Display Control Unit (DCU) and HDMI [LS1021A]
- DUART, DSPI [except for LS1028A, LX2160A], I2C, QSPI [except for LS1028A, LS2160A]
- Edge Virtual Bridge (EVB) [DPAA2 processors]
- Ethernet DPAA [DPAA1 processors]
- Ethernet DPAA2 [DPAA2 processors]
- Ethernet ENETC [LS1028A]
- Ethernet eTSEC (gianfar) [LS1021A]
- FlexCAN [LS1028A, LX2160A]
- FlexSPI [LS1028A, LX2160A]
- Frame Manager (FMan) [DPAA1 processors]
- GIC-400, GIC-500, GIC-ITS
- Integrated Interchip Sound (I2S) / Synchronous Audio Interface (SAI)
- IEEE1588
- IMA-EVM
- Integrated Flash Controller (IFC) NOR [except for LX2160A, LS1028A] and NAND flash [except for LS1028A]
- L2Switch [LS1028A]
- LPUART [LS1021A, LS1043A]
- Management Complex Bus [DPAA2 processors]
- MDIO
- Multiprocessor Interrupt Controller (MPIC)
- Multimedia: GPU, LCD, eDP/DP [LS1028A]
- Open Portable Trusted Execution Environment (OP-TEE) [Except for LS1021A]
- PCIe Root Complex and Endpoint, MSI
- PFE Ethernet [LS1012A]
- Platform DMA
- PHY support: RGMII, SGMII, XFI, XAUI, UXGMII, XLAUI4, 25G-AUI
- Power Management (PM) – CPU hotplug (PH20), CPU idle (PW15/20), Sleep (LPM20), Deep sleep (LPM35), Auto-Response, Dynamic Frequency Scaling (DFS), Thermal Monitor, Power Monitor (board specific)
- Queue Manager (QMan) and Buffer Manager (BMan) [DPAA1 processors]
- QUICC Engine UART, TDM, HDLC, PPPoHT
- SAI/I2S [LS1012A]
- SATA
- Secured Digital Host Controller (eSDHC) and SD/MMC support
- System Memory Management Unit (SMMU) [Arm processors]
- Time Sensitive Network (TSN) [LS1028A]
- Universal Serial Bus (USB) 2.0 and 3.0

- User space IO
- Virtual Function I/O (VFIO) - mmap PCI sources [Except for LS1021A]
- Watchdog Timers

Data Plane Development Kit (DPDK) [LS1012A, LS1028A, LS1043A, LS1046A, LS1088A, LS2088A, LX2160A]

- Support of DPDK v19.11 as base
- Following DPDK Applications have been verified
  - l2fwd
  - l3fwd
  - l2fwd_crypto
  - ipsecgateway
- Direct device assignment using VFIO for DPDK in VM [DPAA2 processors]
- DPDK with UEFI boot
- DPDK on docker
- AIOP cmdif
- IPSEC protocol offload
- KNI support
- PFE with DPDK [LS1012A]
- PKTGEN 19.12.0
- QDMA driver [DPAA2 processors]

Virtualization - OVS-DPDK

- OVS-DPDK 2.13
- OVS-DPDK working with vhost-virtio interfaces
- DPDK working in Virtual Machine

Trust Firmware - A (TF-A) [except for LS1021A]

- Power Management
- OP-TEE OS binary

U-Boot Boot Loader

- U-Boot: 2019.10
- Unified memory map
- On Arm platforms, the U-Boot image includes the device tree
- Non-secure and Secure Boot (ESBC)
- Trusted Firmware-A (TF-A) integration. See TF-A features in “Other Tools …” below
- Boot from FlexSPI NOR [LS1028A, LX2160A], NOR, NAND, QSPI [except for LS1028A, LX2160A], SDHC
- CodeWarrior debug patch for U-Boot
- Clock, CPLD, DUART, DDR4, DSPI [except for LS1028A, LX2160A], eSDHC, GIC-400, GIC-500, I2C, OCRAM, PCIe, USB 2 & 3, SATA, UART
- DCU, eMMC 4.5, I2C3, LPUART, QSPI [except for LS1028A, LX1260A]
- FlexSPI [LS1028A, LX2160A]

- HW load/store prefetch being disabled
- IFC access to NOR [except for LS1028A, LX2160A] and NAND flash [except for LS1028A]
- RTC
- Networking support using eTSEC, FMAN Independent Mode, DPAA2 networking, PFE, ENETC, L2Switch
- Voltage ID (board specific)

Unified Extensible Firmware Interface (UEFI) [LS1043A, LS1046A, LS2088A, LX2160A]

- Base platform boot with ACPI [LX2160A]
- Adoption of EDK2 project development
- AIOP application
- DDR4, DUART, DSPI [except for LS1028A, LX2160], GPIO, I2C, IFC, PCIe, RTC, SATA, SD, Networking support, Watchdog, USB 3.0
- KASLR
- MC High Mem support
- TF-A integration
- SMP Linux boot via EFI_STUB on SD card
- PXE boot via PCIe and DPAA interfaces
- QSPI boot
- Ubuntu Distro boot

EdgeScale – Edge Compute

- Secure Manufacturing
  - Device enrollment with fused device identity
  - Key and fuse config management
- Secure Provisioning
  - Secure library integration
  - Secure enrollment client downloading, verifying and installing the latest firmware (Linux) on the device
- Secure Keys
  - Support of API's to import/generate RSA keys securely
  - Support of PKCS#11 interface for Ssigning operations
  - Support of OPENSSL engine to access these keys
- EdgeScale Dashboard for Users
  - Device management
    - Agent to report more 'status' information of devices
    - Cert-agent in insecure mode
    - Device Logs on cloud
    - Device status monitoring
    - OTA: firmware update, single source boot
    - Secure device enrollment
    - Secure key/certificate provisioning

        - Support of call home to get endpoint from device
        - Un-enrolling device
    - Application management
        - App arguments at deployment time
        - Dynamic deployment of container-based applications
        - Support of public and private apps

Other Tools and Utilities

- AIOPSL [DPAA2 processors]
- Convenience scripts to create and manage common objects like network interfaces. These scripts are packaged in ls2-scripts tarball
- Data Compression Engine in user space
- DPAA2 resource container and object management tool (RESTOOL)
- eIQ machine learning applications and demos [LS1046A, LX2160A]
    - OpenCV 4.0.1
    - Arm Compute Library 19.02
    - Arm NN 19.02
    - TensorFlow 1.12
    - TensorFlow Lite 1.12
- Flexbuild to build component and generate the boot firmware, flex_linux.itb and the NXP LSDK userland containing the specified packages and applications
- FLIB/RTA - SEC descriptor creation library [all processors with SEC 5]
- Frame Manager Configuration Tool (FMC) [DPAA1 processors]
- Frame Manager Ucode [DPAA1 processors]
- Management Complex (MC) Firmware version 10.20.4 – binary only, supporting DPAA2 resource containers and network objects, Resource Manager and Link Manager, DPDMUX basic configurations
- OpenSSL 1.1.1d on LTS 4.19 [DPAA1 processors]
- Platform Security
    - OP-TEE client 3.4.0 [Except for LS1021A]
    - PKCS#11 Library
        - Dynamic deployment of container-based applications
        - Support of public and private apps
        - Support for Multithreaded Applications
        - Integration with PKCS#11 OpenSSL Engine from OpenSC/libp11
- PME Tools [DPAA1 processors]
- Python scripts to generate RCW binaries
- Soft Parser Configuration Tool
- Time Sensitive Network (TSN) support
    - TSN configuration tool
    - ENETC 1588 two steps timestamping

— ENETC TSN driver

— SWITCH TSN driver

3.3 Feature support matrix

The following tables show the features that are supported in this release. Refer to the legend below to decipher the entries.

Legend:

- **Y** - Feature is supported by software
- **/** - Feature is not supported by software
- **na** - Hardware feature is not available

Table 1. Key features

Feature	LS1012A	LS1021A	LS1028A	LS1043A	LS1046A	LS1088A	LS2088A	LX2160A
32-bit Userspace, BE	/	/	/	/	/	/	/	/
64-bit Userspace, BE	/	na	/	/	/	/	/	/
32-bit Userspace, LE	/	Y	/	/	/	/	/	/
64-bit Userspace, LE	Y	na	Y	Y	Y	Y	Y	Y
36b phys mem	na	Y	na	na	na	na	na	na
40b phys mem	Y	na	Y	Y	Y	Y	Y	Y
AIOPSL	na	na	na	na	na	Y	Y	Y
ASF	/	/	/	/	/	/	/	/
Data Plane Development Kit (DPDK)	Y	/	Y	Y	Y	Y	Y	Y
EdgeScale - Edge Comupte	Y	Y	Y	Y	Y	Y	Y	Y
Hugetlbfs	Y	Y	Y	Y	Y	Y	Y	Y
Management Complex	na	na	na	na	na	Y	Y	Y
Open Data Plane (ODP)	/	/	/	/	/	/	/	/
Open Portable Trust Execution Environment (OP-TEE)	Y	/	Y	Y	Y	Y	Y	Y
Secure Boot	Y	Y	Y	Y	Y	Y	Y	Y
Time Sensitive Network (TSN)	na	na	Y	na	na	na	na	na
Unified Extensible Firmware Interface (UEFI)	/	/	/	Y	Y	/	Y	Y
USDPAA Applications	na	na	na	/	/	na	na	na
Trusted Firmware-A (TF-A)	Y	na	Y	Y	Y	Y	Y	Y

Table 2. Virtualization

Feature	LS1012A	LS1021A	LS1028A	LS1043A	LS1046A	LS1088A	LS2088A	LX2160A
KVM/QEMU	Y	Y	Y	Y	Y	Y	Y	Y

Table continues on the next page...

Table 2. Virtualization (continued)

LXC	Y	Y	Y	Y	Y	Y	Y	Y
Libvirt	Y	Y	Y	Y	Y	Y	Y	Y
Network interfaces direct assignment	na	na	na	na	na	Y	Y	Y
VFIO	na	na	na	na	na	Y	Y	Y
Docker	Y	/	Y	Y	Y	Y	Y	Y

Table 3. Linux applications

Feature	LS1012A	LS1021A	LS1028A	LS1043A	LS1046A	LS1088A	LS2088A	LX2160A
Linux IPFwd	Y	Y	Y	Y	Y	Y	Y	Y
Linux IPSec	Y	Y	Y	Y	Y	Y	Y	Y
Linux Termination	Y	Y	Y	Y	Y	Y	Y	Y
Linux NAS	/	/	/	/	/	/	/	/
Linux RAID	/	/	/	/	/	/	/	/
Linux SATA	/	/	/	/	/	/	/	/

Table 4. Linux kernel drivers

Feature	LS1012A	LS1021A	LS1028A	LS1043A	LS1046A	LS1088A	LS2088A	LX2160A
Audio - I2S, SAI	Y	Y	Y	na	na	na	na	na
CAAM DMA	Y	/	/	/	/	/	/	/
DCE	na	na	na	na	na	na	Y	Y
DCU	na	Y	na	na	na	na	na	na
Display - eDP/DP, LCD	na	na	Y	na	na	na	na	na
DMA	Y	Y	Y	Y	Y	Y	Y	Y
DPAA1 - Ethernet, FMan, QMan, BMan	na	na	na	Y	Y	na	na	na
DPAA2 - Ethernet, L2Switching, QBMan	na	na	na	na	na	Y	Y	Y
eSDHC	Y	Y	Y	Y	Y	Y	Y	Y
ENETC	na	na	Y	na	na	na	na	na
FlexCAN	na	/	Y	na	na	na	na	Y
FlexSPI	na	na	Y	na	na	na	na	Y
GPU	na	na	Y	na	na	na	na	na
I2C	Y	Y	Y	Y	Y	Y	Y	Y
IEEE1588, linuxptp	na	Y	Y	Y	Y	Y	Y	Y
IFC	na	Y	na	Y	Y	Y	Y	na

Table continues on the next page...

Table 4. Linux kernel drivers (continued)

IMA-EVM	Y	/	/	Y	Y	Y	Y	/
TSN Ethernet Switch	na	na	Y	na	na	na	na	na
LPUART	na	Y	/	Y	Y	/	/	na
QSPI	Y	Y	na	Y	Y	Y	Y	na
PCIe RC	Y	Y	Y	Y	Y	Y	Y	Y
PCIe EP	/	/	/	Y	Y	Y	Y	Y
PFE	Y	na	na	na	na	na	na	na
Power Management	Y	Y	Y	Y	Y	Y	Y	Y
Preempt Real-Time	/	/	/	Y	Y	Y	Y	Y
SATA	Y	Y	Y	Y	Y	Y	Y	Y
SEC	Y	Y	Y	Y	Y	Y	Y	Y
dSPI	/	Y	/	Y	Y	/	Y	na
TDM (QE)	na	na	na	Y	na	na	na	na
TSN	na	na	Y	na	na	na	na	na
USB	Y	Y	Y	Y	Y	Y	Y	Y
VeTSEC	na	Y	na	na	na	na	na	na
VFIO for Network Resources	na	na	na	na	na	Y	Y	Y
Watchdog	Y	Y	Y	Y	Y	Y	Y	Y

3.4 Supported targets

Processors, development boards, and cards supported all releases.

NOTE

In the following tables, in the rows corresponding to the processors, the silicon revision is indicated. In the rows corresponding to the development boards, the board is marked with "Y" if it is supported. "N" means that a processor or development board is not supported.

Table 5. QorIQ Layerscape processors supported

Processor	Board	LSDK 17.06	LSDK 17.09	LSDK 17.09-update-103017	LSDK 17.12	LSDK 18.03	LSDK 18.06	LSDK 18.09	LSDK 18.12	LSDK 19.03	LSDK 19.06	LSDK 19.09	LSDK 20.04
LS1012A		N	rev 1.0	rev 1.0 rev 2.0	rev 1.0 rev 2.0	rev 1.0 rev 2.0	rev 1.0 rev 2.0	rev 1.0 rev 2.0	rev 1.0 rev 2.0	rev 1.0 rev 2.0	rev 1.0 rev 2.0	rev 1.0 rev 2.0	rev 1.0 rev 2.0

Table continues on the next page...

Table 5. QorIQ Layerscape processors supported (continued)

	LS1012ARDB	N	Y	Y	Y	Y	Y	Y	Y	Y	Y	Y	Y
	FRWY-LS1012A	N	N	N	N	N	Y	Y	Y	Y	Y	Y	Y
LS1021A/ LS1020A		rev 2.0	rev 2.0	rev 2.0	rev 2.0	rev 2.0	rev 2.0	rev 2.0	rev 2.0	rev 2.0	rev 2.0	rev 2.0	rev 2.0
	TWR-LS1021A	Y	Y	Y	Y	Y	Y	Y	Y	Y	Y	Y	Y
LS1028A/ LS1027A		N	N	N	N	N	N	N	N	N	N	rev 1.0	rev 1.0
	LS1028ARDB-PA	N	N	N	N	N	N	N	N	N	N	Y	Y
LS1043A/ LS1023A		rev 1.1	rev 1.1	rev 1.1	rev 1.1	rev 1.1	rev 1.1	rev 1.1	rev 1.1	rev 1.1	rev 1.1	rev 1.1	rev 1.1
	LS1043ARDB-PC	Y	Y	Y	Y	Y	Y	Y	Y	Y	Y	Y	Y
	LS1043ARDB-PD	N	Y	Y	Y	Y	Y	Y	Y	Y	Y	Y	Y
LS1046A/ LS1026A		rev 1.0	rev 1.0	rev 1.0	rev 1.0	rev 1.0	rev 1.0	rev 1.0	rev 1.0	rev 1.0	rev 1.0	rev 1.0	rev 1.0
	LS1046ARDB-PB	Y	Y	Y	Y	Y	Y	Y	Y	Y	Y	Y	Y
	FRWY-LS1046A	N	N	N	N	N	N	N	N	N	Y	Y	Y
LS1088A		rev 1.0	rev 1.0	rev1.0	rev 1.0	rev 1.0	rev 1.0	rev 1.0	rev 1.0	rev 1.0	rev 1.0	rev 1.0	rev 1.0
	LS1088A-RDB	Y	Y	Y	Y	Y	Y	Y	N	N	N	N	N
	LS1088ARDB-PB	N	N	N	N	N	N	Y	Y	Y	Y	Y	Y
LS2088A/ LS2084A/ LS2081A		rev 1.0 rev 1.1	rev 1.0 rev 1.1	rev 1.0 rev 1.1	rev 1.0 rev 1.1	rev 1.0 rev 1.1	rev 1.0 rev 1.1	rev 1.0 rev 1.1	rev 1.0 rev 1.1	rev 1.0 rev 1.1	rev 1.0 rev 1.1	rev 1.0 rev 1.1	rev 1.0 rev 1.1
	LS2088A-RDB	Y	Y	Y	Y	Y	Y	Y	Y	Y	Y	Y	Y
LX2160A		N	N	N	N	N	N	N	N	rev 1.0	rev 1.0	rev 1.0	rev 1.0 rev 2.0
	LX2160ARDB	N	N	N	N	N	N	N	N	Y	Y	Y	Y

3.5 Fixed, open, and closed issues

This section contains 3 tables: Fixed, open, and closed issues. Fixed issues have a software fix that has been integrated into the 'Fixed In' Release. Open issues do not currently have a resolution. Workaround suggestions are provided where possible. Closed issues are issues where the root cause and fix are outside the scope of the Layerscape SDK.

Table 6. LSDK 20.04 fixed issues

ID	Description	Disposition	Opened in	Fixed in
DPDK-1626	When testing IPSec-Secgw with CAAM or OpenSSL, there is a few packet loss for larger packet sizes beyond 0.001%, which may result in abnormal performance result.	Fixed	LSDK 19.03	LSDK 20.04
DPDK-1646	On DPAA2 platforms, flows director is not working as expected.	Fixed	LSDK 19.03	LSDK 20.04
QLINUX-8700	The DPAA2 hardware does not configure PFC congestion notifications for some DPNI objects created with restool. General congestion is reported correctly, as expected, but PFC flow control frames are not sent.	Fixed	LSDK 17.12	LSDK 20.04
QLINUX-9308	When the second kernel is booted via kexec, DPAA2 ethernet does not work.	Fixed	LSDK 19.03	LSDK 20.04
QLINUX-9642	Analysis of the crashed kernel dump via gdb is not supported. Crash utility can be used	Fixed	LSDK 19.03	LSDK 20.04
QLINUX-12142	USB works with DPAA1 SDK driver, which is the default. It does not work with DPAA1 upstream driver.	Fixed	LSDK 19.09	LSDK 20.04
QLINUX-12199	Analysis of the crashed kernel dump via gdb is not supported on LTS-4.19. Crash utility can be used.	Fixed	LSDK 19.09	LSDK 20.04
QLINUX-12862	On few LS1028A RDBs, external link on a ENETC Port0 might appear as down and the ethernet port cannot be used for traffic.On few LS1028A RDBs, Linux might fail to detect external link auto-negotiation completion for the ENETC Port0 PHY device (AR8033-SGMII) at the first attempt to bring the ethernet interface up. .	Fixed	LSDK 19.09	LSDK 20.04
QLINUX-12869	There is a known limitation with AQR405 ethernet phy used in USXGMII mode, when all four ports are used. This happens with SerDes protocols enabling four or more USXGMII ports.	Fixed	LSDK 19.09	LSDK 20.04
QLINUX-12944	RT latency is larger while there is higher network traffic load on LS2088A and LX2160A.	Fixed	LSDK 19.09	LSDK 20.04
QLINUX-12978	The ENETC VF driver fails to build as an external kernel module due to MDIO workarounds.	Fixed	LSDK 19.09	LSDK 20.04

Table continues on the next page...

Table 6. LSDK 20.04 fixed issues (continued)

QSDK-5816	The subsequent boot fails when testing chain of trust with confidentiality.	Fixed	LSDK 19.06	LSDK 20.04
QUBOOT-4939	On LS1021A TWR, secure boot from SD does not work.	Fixed	LSDK 19.03	LSDK 20.04

Table 7. LSDK 20.04 open issues

ID	Description	Disposition	Opened in	Workarounds
LF-385	Linux IPSec performance degrades on LS2088A RDB on LTS 5.4.	Open	LSDK 20.04	

LF-1010	On LS1021A TWR, ioremap fails to reserve 1GB region as per dtsi entry. QSPI can support up to 512MB starting from 0x4000_0000. If dtsi entry is changed from 1GB to 512MB, still ioremap fails to reserve memory.	Open	LSDK 20.04	Use 64M as supported size. Diff of patch below.
				`diff --git a/arch/arm/boot/dts/ls1021a.dtsi b/arch/arm/boot/dts/ls1021a.dtsi`
				`index 464df4290ffc..e851d6a9fe98 100644`
				`--- a/arch/arm/boot/dts/ls1021a.dtsi`
				`+++ b/arch/arm/boot/dts/ls1021a.dtsi`
				`@@ -181,7 +181,7 @@`
				`#address-cells = <1>;`
				`#size-cells = <0>;`
				`reg = <0x0 0x1550000 0x0 0x10000>,`
				`- <0x0 0x40000000 0x0 0x40000000>;`
				`+ <0x0 0x40000000 0x0 0x4000000>;`
				`reg-names = "QuadSPI", "QuadSPI-memory";`
				`interrupts = <GIC_SPI 131 IRQ_TYPE_LEVEL_HIGH>;`

LF-1082	Screen will flick with 4K resolutio in gpulib version 6.4.0. The issue does not occur in gpulib version	Open	LSDK 20.04	

Table continues on the next page...

Table 7. LSDK 20.04 open issues (continued)

	6.2.4, and with 1080P resolution.			
LF-1183	LPUART is not supported on LS1028A	Open	LSDK 20.04	
LF-1200	DSPI is not supported on LS1028A.	Open	LSDK 20.04	
LF-1254	While enable "CONFIG_ARM_SMMU_DISABLE_BYPASS_BY_DEFAULT", there will be MC issue, which blocks the kernel bootup on LX2160A, LS1088A, and LS2088A. In LSDK, this issue can be avoidedbecause LSDK defconfig disables this options to allow SMMU bypass mode. Meanwhile, default bootargs also enables smmu bypass by adding	Open	LSDK 20.04	

Table continues on the next page...

Table 7. LSDK 20.04 open issues (continued)

	"arm-smmu.disable_bypass=0" in bootargs.			
PLATSEC-1128	Signing image by CST might fail on LS1043A and LS1046A platforms in case of "Error in opening the file: pfe.itb"	Open	LSDK 20.04	Firstly run "flex-builder -i signimg -m ls1012ardb -b qspi -s" to generate pfe.itb, then sign image for LS1043A and LS1046A platforms
QLINUX-11792	On LS1043A and LS1046A, there is call trace on the optical port while testing parallel tcp with DPAA1 upstream driver.	Open	LSDK 19.06	Add the 'iommu.passthrough=1' boot parameter when using the upstream driver
QLINUX-11797	There is no Kexec support on LS1021A (Armv7) platform.	Open	LSDK 19.06	
QLINUX-12806	GPU driver does not work with SMMU enabled. For GPU functionality configure SMMU in passthrough mode.	Open	LSDK 19.09	Configure SMMU in passthrough mode: • by using iommu.passthrough=1 kernel argument or • by setting CONFIG_IOMMU_DEFAULT_PASSTHROUGH=y kernel option, if available.
QLINUX-13542	ASLEEP does not	Open	LSDK 19.09_upd	

Table continues on the next page...

Table 7. LSDK 20.04 open issues (continued)

	assert while LS1046A going into low power mode.		ate_291119	
QLINUX-13788	FlexCAN is not supported on LS1021A.	Open	LSDK 20.04	
QLINUX-13834	OpenSSL 1.1.1d is not supported on DPAA2 platforms.	Open	LSDK 20.04	
QLINUX-13842	An 'ifconfig down; ifconfig up' sequence on the LX2160A USXGMII ports will leave the ports down.	Open	LSDK 20.04	
QLINUX-13867	On LS1012A FRWY, the packet will be lost when testing the jumboframe with packet size larger than 1800 bytes.	Open	LSDK 20.04	

QSDK-6387	On LS1028A RDB, touch panel cursor does not work on Weston desktop. This issue is introduced in the upstream	Open	LSDK 20.04	Use the following update to fix the issue that cursor can't be moved on touch panel:
				`diff --git a/drivers/hid/hid-input.c b/drivers/hid/hid-input.c`
				`index 63855f275a38..935f302da046 100644`
				`--- a/drivers/hid/hid-input.c`
				`+++ b/drivers/hid/hid-input.c`
				`@@ -1911,7 +1911,6 @@ int hidinput_connect(struct hid_device *hid, unsigned int force)`
				`}`

Table continues on the next page...

Table 7. LSDK 20.04 open issues (continued)

	kernel 4.20.rc3 and later version.			`}`
				
				`-`
				`hidinput_change_resolution_multipliers(hid`
				`);`
				
				`list_for_each_entry_safe(hidinput, next,`
				`&hid->inputs, list) {`
				`if (drv->input_configured &&`

QSDK-6529	On LS1012A RDB and FRWY, RSA verification fails in secure boot.	Open	LSDK 20.04	

Table 8. LSDK 20.04 closed issues

ID	Description	Disposition	Found in	Workarounds
DPDK-879	If traffic is sent on disconnected network ports of DPAA2 running DPDK, the board hangs and needs to be restarted.	Will not Fix	LSDK 17.06	Network ports shall be connected while sending traffic.
DPDK-1368	Performance on Docker is not a primary use-case for DPDK.	Will not Fix	LSDK 18.06	
DPDK-1364	DPDK l2fwd-crypto is to used/verified only for functional cases. No Performance numbers are applicable as aim on this.	Will not Fix	LSDK 18.06	
QLINUX-3357	On TWR-LS1021A, some resolutions (e.g. 1920x1080) may not work well with some monitors. The software will not downgrade to another resolution automatically.	Hardware Issue	NA	Manually set another resolution such as: 1024x768@60 : fbset -fb /dev/fb0 -g 1024 768 1024 768 24 -t 15384 168 8 29 3 144 6
QLINUX-5325	AQR PHY LED remains off if link is at 1Gbps on LS2088ARDB.	Hardware Issue	NA	
QLINUX-5417	Cortina PHY LEDs are permanently off on LS2088ARDB.	Hardware Issue	NA	
QLINUX-5616	On LS1043A, KVM support on host machines with 64KB pages is not functional. The limitation exists, because the memory range associated with the GIC CPU interface, in the GIC400 memory map, is not aligned to 64KB.	Hardware Issue	SDK 2.0	Use only host machines with 4KB pages in order to support KVM virtualization.

Table continues on the next page...

Table 8. LSDK 20.04 closed issues (continued)

QLINUX-5637	On TWR-LS1021A, after resuming from deep sleep, the kernel cannot initialize SD card and call trace occurs because the card never leaves busy state.	Hardware Issue	NA	Upgrade the on-board CPLD to version 3.2.
QLINUX-5661/ QUBOOT-1320	HP 2.0 pen drive not enumerated in Standard A port on LS2088ARDB and LS1043ARDB board. However, it is properly enumerated in micro port.	Hardware Issue	NA	
QLINUX-5671	On TWR-LS1021A, when doing deep sleep with all three Ethernet ports on, there may be the error message "PM: Device mdio@2d24000:02 failed to suspend: error -16".	Hardware Issue	NA	Upgrade the onboard CPLD to version 3.2.
QLINUX-6595	On LS1046A RDB, transfer complete interrupt should be generated by eSDHC controller after it sends CMD18 (multiple blocks read) to card. However, after sleep, this interrupt did not occur for CMD18 and this caused software to report hardware timeout issue.	Hardware Issue	NA	
QLINUX-7096/ LF-566	Scatter/Gather and Jumbo frames are supported with some limitations. S/G buffers and Jumbo frames must follow strict alignment and size restrictions. These restrictions are guaranteed on ingress for DPAA interfaces. Traffic originated from userspace or other Ethernet interfaces might not follow the restrictions, which will cause the S/G fragments to be linearized and the Jumbo frames to be realigned on egress. These limitations are imposed by the A-010022 and A-050385 errata.	Hardware Issue	LSDK 17.09	
QLINUX-7733	KVM 32-bit is not supported on LS1043A and LS1046A. This is a limitation in KVM open source.	Will not Fix	LSDK 17.06	
QLINUX-8735	On Layerscape platforms, e1000 NIC card will lose PCIe link throughout the sleep process, which makes the kernel hang when resume. Though PCIe-SATA card will keep PCIe link in L0 in the sleep process, it still cannot resume from sleep all the time.	Will not Fix	LSDK 17.12	
QLINUX-9078	PCIe MSI interrupts balancing fails in iperf tool, but works while using Spirent Test Center.	Will not Fix	LSDK 18.03	
QLINUX-9328/10989/11228	On DPAA2 platforms, when the second kernel is booted via kexec, Ethernet, QDMA and PCIe e1000 desktop card do not work. The root cause is GIC v3 architectural limitation. In summary soft reset of ITS is not supported.	Will not Fix	LSDK 18.06	

Table continues on the next page...

Table 8. LSDK 20.04 closed issues (continued)

	Because of this, all the interfaces which use MSI in second kernel are not guaranteed to work. There is a software workaround for EFI based systems(patches sent by Arm), but no solution so far for non EFI systems. https://lkml.org/lkml/2018/9/21/1066			
QLINUX-9637	Busy poll feature is not supported by the DPAA2 Ethernet driver. Starting with kernel 4.10, busy polling support is included in the network stack core, with no code needed on the driver side. For previous kernel versions, driver support is necessary, but the DPAA2 Ethernet driver does not include this support.	Will not Fix	LSDK 18.06	
QLINUX-9693	SPI to DUART bridge is not supported on LS1012AFRWY.	Will not Fix	LSDK 18.06	
QLINUX-10150	CPU dynamic offline fails on CPU0 for Arm-v7 and Arm-v8 32-bit. According to arch/arm/kernel/smp.c function platform_can_hotplug_cpu() comments, CPU0 is not allowed to be shutdown for reasons.	Will not Fix	LSDK 18.09	
QLINUX-11266	Linux IPSec with job ring driver is not supported on LTS-4.14-RT branch.	Will not Fix	LSDK 19.03	
QLINUX-11829	On the LX2160A RDB, the RGMII ports (dpmac17 and dpmac18) require the Atheros 803x PHY kernel driver in order to function properly. By default this driver is built as a module. In order to use the RGMII ports, it is recommended to either have the PHY driver built in, or insert the corresponding module at runtime. Not using the Atheros PHY driver may result in frame loss at very low throughput rates, due to the SmartEEE feature being enabled by default on the PHY.	Will not Fix	LSDK 19.06	
QLINUX-10974	On LS2088A RDB, there are AER correct errors when testing PCIe GEN3. The root cause is the PCIe controller Physical Layer encounters Rx error.	Will not Fix	LSDK 19.03	
QLINUX-11830	On LS1046A, ext4 rootfs fails to mount on NAND. Ext2, ext3, XFS, JFS, FAT and other "conventional" file systems are designed to work with block devices, not MTD devices.	Will not Fix	LSDK 19.06	
QPPA-28	There is performance degradation in memory bandwidth test on LS2088A RDB.	Will not Fix	LSDK 17.12	

Table continues on the next page...

Table 8. LSDK 20.04 closed issues (continued)

QSDK-1677	When telneting to board console from Linux server connected to on TWR-LS1021A, the board will power reset due to wrong signal sent.	Hardware Issue	NA	Remove R214 from the board.
QSDK-1841	On TWR-LS1021A, copy from NOR flash to NOR flash fails. It is a known limitation with Micron flash.	Hardware Issue	NA	
QSDK-2478	On TWR-LS1021A, boot dtb, kernel, and filesystem directly from QSPI flash could not be supported.	Will not Fix	SDK v1.9	1.Program the general dtb, Linux kernel, and ramdisk to the QSPI flash by 'sf write' command(under sdboot or qspiboot). 2.Boot the dtb, kernel, and ramdisk from QSPI flash. Avoid booting from QSPI flash directly. Read the dtb, kernel and ramdisk from the QSPI flash to RAM by 'sf read' u-boot command and then boot from RAM. By default, the QSPI flash on the TWR-LS1021A includes: rcw, uboot, kernel, dtb, and ramdisk. Note: This workaround only applies to QSPI flash.
QSDK-3954	Transcend 8G class 10 SDHC card does not work with 50MHz high speed mode on LS2088ARDB.	Hardware Issue	LSDK 17.06	Reducing SD clock frequency or using SD cards from other vendors like Sandisk, Kingston, Sony.
QSDK-3955	USB flash drive from some vendors like Kingston, Transcend, Samtec does not work reliably on LS2088ARDB.	Hardware Issue	LSDK 17.06	Use USB flash drives from other vendors like ADATA, Sandisk, Lexar, Deloitte
QUBOOT-2055	The parameter `fdt_high` set to `0xffffffff` causes the failure of booting images from NOR flash directly.	Will not Fix	SDK 2.0-1611	Set fdt_high in uboot environment variable to 0xa0000000 by using the command in U-Boot:

Table continues on the next page...

Table 8. LSDK 20.04 closed issues (continued)

				=>setenv fdt_high 0xa0000000
QUBOOT-2161	The LS1021ATWR board and CPLD could not provide clock frequency information to the software. So the U-Boot software can only support static frequency settings (100M DDR clock and 100M system clock). If different clock settings are selected through the switch configurations.	Hardware Issue	NA	Change the settings in software manually(include/ configs/ls1021atwr.h). Change the following settings to the frequency selected by the switches. #define CONFIG_SYS_CLK_FREQ 100000000 #define CONFIG_DDR_CLK_FREQ 100000000
QUBOOT-3480	SGMII PHY less support is not accepted in upstream, so the support is dropped in LSDK.	Will not Fix	LSDK 18.03	

Chapter 4
Layerscape SDK user guide

4.1 LSDK Quick Start

4.1.1 Host system requirements

- Ubuntu 18.04 LTS should be installed on the host machine.
- If this requirement is not fulfilled, see "Emulate Ubuntu 18.04 environment using Docker container" or "Install Ubuntu 18.04 LTS via WSL (Windows Subsystem for Linux) on Windows 10" below.
- For root users, there is no limitation for the build. For non-root users, obtain sudo permission by running the command `sudoedit /etc/sudoers` and adding a line <`user-account-name`> `ALL=(ALL:ALL) NOPASSWD: ALL in /etc/sudoers`.
- To build the target NXP LSDK userland for arm64/armhf arch, the user's network environment must have access to the remote Ubuntu official server.

Emulate Ubuntu 18.04 environment using Docker container (optional)

If a Linux distribution other than Ubuntu 18.04 is installed on the host machine, perform the following steps to create an Ubuntu 18.04 Docker container to emulate the environment. Install Docker on the host machine. See https://docs.docker.com/engine/installation/ for information on how to install Docker on the host machine.

To build the NXP LSDK userland, the user's network environment must have sudo permission for Docker commands or the user must be added to a group called "docker" as specified below.

Change current group to "docker", add your account to it and restart docker service:

```
$ sudo newgrp - docker
$ sudo usermod -aG docker <accountname>
$ sudo gpasswd -a <accountname> docker
$ sudo service docker restart
```

Install Ubuntu 18.04 LTS via WSL (Windows Subsystem for Linux) on Windows 10 (optional)

If you have an Windows 10 machine and have no any available Linux machine, it is feasible to install Ubuntu 18.04 LTS via WSL on Windows 10, please refer to the steps from the link https://docs.microsoft.com/en-us/windows/wsl/install-win10

NOTE

Building LSDK with default settings works to generate all images under WSL 1, but generating distro userland from source doesn't work under WSL 1 environment due to the imcomplete system call compatibility of WSL 1, so it's recommended to upgrade to WSL 2 if your Win10 version is Windows 10 Build 18990 or above. You can connect to WSL Ubuntu 18.04 via ssh to work in multiple terminal sessions if needed. Generally, the location of Ubuntu under WSL in Win10 is C:\Users\<account-name>\AppData\Local\Packages\CanonicalGroupLimited.UbuntuonWindows_79rhkp1fndgsc\LocalState\rootfs, you can creat a shortcut of it on destktop for accessing in convenience.

NOTE

As WSL doesn't support detection of block devices, users can not run flex-installer in WSL environment to deploy LSDK images. Optionally, users can install Linux Ubuntu 18.04 via VirtualBox on the Windows system.

How to set HTTP proxy in Ubuntu

1. If the Linux host machine is in a subnet that needs HTTP proxy to access external Internet, it needs to set environment variable http_proxy and https_proxy.

```
export http_proxy="http://<account>:<password>@<domain>:<port>"
export https_proxy="https://<account>:<password>@<domain>:<port>"
export no_proxy="localhost"
```

2. Set proxy in /etc/apt/apt.conf

```
Acquire::http::Proxy "http://<account>:<password>@<domain>:<port>";
Acquire::https::Proxy "https://<account>:<password>@<domain>:<port>";
```

3. Set proxy in /etc/wgetrc

```
http_proxy = http://<account>:<password>@<domain>:<port>
https_proxy = https://<account>:<password>@<domain>:<port>
```

4.1.2 Download and deploy LSDK images with flex-installer in Linux environment

LSDK can be easlily built from source by flexbuild, a flexible and ease-to-use build framework with cmdline tool flex-builder to help users generate desired target images with various configurations for a variety of use cases, to build LSDK from source, please refer to section, How to build LSDK with Flexbuild.

This section explains how to use `flex-installer` to quickly deploy LSDK images for various use cases, such as downloading and deploying LSDK images, deploying firmware image, and formatting storage device on host machine or on a target ARM reference board.

For the step by step procedure on how to automatically download and deploy default LSDK images on a board, how to update U-Boot firmware for supported boot options on a board, and for more information about a board, refer to the board specific LSDK Quick Start Guide.

- **Download `flex-installer` to deploy LSDK images.**

  ```
  $ wget https://www.nxp.com/lgfiles/sdk/lsdk2004-update-290520/flex-installer && chmod +x flex-installer && sudo mv flex-installer /usr/bin
  ```

  The following table lists and explains the command options used in the flex-installer commands below.

Table 9. flex-installer command options

Command option	Description	Supported values
`-m <machine>`	Refers to board name.	ls1012ardb, ls1012afrwy, ls1021atwr, ls1028ardb,ls1043ardb, ls1046ardb, ls1046afrwy, ls1088ardb_pb, ls2088ardb, lx2160ardb, lx2160ardb_rev2
`-f <firmware>`	Refers to firmware image.	firmware_<machine>_<bootloader>_<bootype>.img

Table continues on the next page...

Table 9. flex-installer command options (continued)

`-b <bootpartition>`	Refers to boot partition image. There is a set of boot partition images for each of the Linux kernel versions and platforms (32-bit, 64-bit) supported by LSDK.	For Linux 5.4: — bootpartition_LS_arm64_lts_5.4.tgz — bootpartition_LS_arm32_lts_5.4.tgz For Linux 4.19: — bootpartition_LS_arm64_lts_4.19.tgz — bootpartition_LS_arm32_lts_4.19.tgz
`-r <rootfs>`	Refers to NXP LSDK userland. There are different rootfs images for default userland and Edgescale userland.	Default: — rootfs_lsdk2004_ubuntu_main_arm64.tgz or rootfs_lsdk2004_ubuntu_main_arm32.tgz Yocto: — rootfs_lsdk2004_yocto_tiny_arm64.tgz or rootfs_lsdk2004_yocto_tiny_arm32.tgz
`-R <rootfs2>`	Specifies the second distro rootfs image in case of dual distros installation.	Refer to <rootfs> above
`-d <device>`	Refers to storage device (SD, USB, or SATA), **Note:** — Use the command `cat /proc/partitions` to see a list of devices and their sizes to make sure that the correct device names have been chosen. — The SD/USB/SATA storage drive in the Linux PC is detected as `/dev/sdX`, where X is a letter such as a, b, c. Make sure to choose the correct device name, because data on this device will be replaced. — If the Linux host machine supports read/write SD card directly without an extra SD card reader device, the device name of SD card is typically `mmcblk0`.	/dev/<device_name>

Table continues on the next page...

Table 9. flex-installer command options (continued)

`-e <dtb>`	'-e dtb' option is used for UEFI in DTB way. There is no need to add '-e' option in case of U-Boot as bootloader by default	dtb, no need this option in case of U-Boot as bootloader
`-u <url>`	Specifies URL of distro webserver to override the default one for automatically downloading distro.	URL of distro webserver

NOTE

To run flex-installer command on the target storage drive connected to a reference board, you need to boot the board to TinyLinux and bring up network interface. The steps are explained in use case "**To deploy already downloaded/built LSDK images on a reference board running TinyLinux.**" in this section.

NOTE

- The UEFI based composite firmware must be programmed in flash device (not in SD card) on LS1043ARDB/LS1046ARDB/LS2088ARDB/LX2160ARDB.
- The U-Boot based composite firmware must be programmed in flash device (not in SD card) on LS2088ARDB/LS1012ARDB/LS1012AFRWY, no limitation on other Layerscape boards.
- Users can install distro rootfs and bootpartition tarball into SD card (or USB/SATA disk) on all Layerscape boards.

- **To automatically download and deploy LSDK images to the target storage drive on a Linux host machine or a reference board.**

  Usage:

```
 $ flex-installer -i auto -m <machine> -d <device> [-e <dtb|acpi> -f <firmware> -b
<bootpartition> -r <rootfs> -R <rootfs2> -u <url>]
```

  For list of supported values for `<machine>`, `<device>`, `<dtb|acpi>`, `<firmware>`, `<bootpartition>`, `<rootfs>`, `<rootfs2>`, and `<url>` see Table 9

  Example:

  To automatically install LSDK default `rootfs_lsdk2004_ubuntu_main_arm64.tgz` and `bootpartition_LS_arm64_lts_5.4.tgz` for LS1043ARDB.

```
$ flex-installer -i auto -m ls1043ardb -d /dev/sdx
```

  To automatically install LSDK with specific kernel version for boot partition and modify the default size of partitions with '-p' option for LS1046ARDB.

```
$ flex-installer -i auto -m ls1046ardb -d /dev/sdx -b bootpartition_LS_arm64_lts_4.19.tgz -p
4P=100M:1G:500M:-1
```

  To automatically install LSDK Lite for LS1028ARDB.

```
$ flex-installer -i auto -m ls1028ardb -d /dev/sdx -r rootfs_lsdk2004_ubuntu_lite_arm64.tgz
```

  To automatically install LSDK tiny userland for LS1028ARDB.

```
$ flex-installer -i auto -m ls1028ardb -d /dev/sdx -r rootfs_lsdk2004_yocto_tiny_arm64.tgz
```

To automatically install LSDK for UEFI as bootloader, need to add '-e dtb' option for UEFI in DTB way for LS2088ARDB.

```
$ flex-installer -i auto -m ls2088ardb -d /dev/sdx -e dtb
```

To automatically install LSDK for UEFI as bootloader, need to add '-e acpi' option for UEFI in ACPI way for LX2160ARDB.

```
$ flex-installer -i auto -m lx2160ardb -d /dev/sdx -e acpi
```

- **To only download default composite firmware, rootfs_lsdk2004_ubuntu_main_arm64.tgz, and `bootpartition_LS_arm64_lts_5.4.tgz` without installation, on a Linux host machine or a reference board.**

  Usage:

  ```
  $ flex-installer -i download -m <machine>
  ```

  For list of supported values for `<machine>`, see Table 9

  > **NOTE**
  > For boards that do not support SD boot, such as ls1012ardb, ls1012afrwy, the command downloads only rootfs and boot partition images.

  Example:

  To download default LSDK images for LS1046ARDB: `rootfs_lsdk2004_ubuntu_main_arm64.tgz`, `firmware_ls1046ardb_uboot_sdboot.img`, and `bootpartition_LS_arm64_lts_5.4.tgz`.

  ```
  $ flex-installer -i download -m ls1046ardb
  ```

- **To download specific LSDK images on a Linux host machine or a reference board.**

  Usage:

  ```
  $ flex-installer -i download -m <machine> -f <firmware> -b <bootpartition> -r <rootfs>
  ```

  For list of supported values for `<machine>`,`<firmware>`, `<bootpartition>`, and `<rootfs>` see Table 9.

  Example:

  To download the specific xspiboot composite firmware for LX2160ARDB: `firmware_lx2160ardb_uefi_xspiboot.img`

  ```
  $ flex-installer -i download -m lx2160ardb -f firmware_lx2160ardb_uefi_xspiboot.img
  ```

  The command downloads `firmware_lx2160ardb_uefi_xspiboot.img`, default `bootpartition_LS_arm64_lts_5.4.tgz`, and default `rootfs_lsdk2004_ubuntu_main_arm64.tgz`.

- **To deploy custom LSDK images for single distro into the target storage drive connected to a Linux host machine or a reference board.**

  Usage:

  ```
  $ flex-installer -b <bootpartition> -r <rootfs> -f <firmware> -d <device>
  ```

  For list of supported values for `<firmware>`, `<device>`, `<bootpartition>`, `<rootfs>`, see Table 9.

  Example:

  ```
  $ flex-installer -b bootpartition_arm64_lts_5.4.tgz -r rootfs_lsdk2004_ubuntu_main_arm64.tgz -f
  firmware_ls1046ardb_uboot_sdboot.img -d /dev/sdx
  ```

- **To deploy custom LSDK images for dual distros into the target storage drive connected to a Linux host machine or a reference board.**

  Usage:

  ```
  $ flex-installer -b <bootpartition> -r <rootfs> -R <rootfs2> -f <firmware> -d <device>
  ```

  For list of supported values for `<firmware>`, `<device>`, `<bootpartition>`, `<rootfs>`, `<rootfs2>` see Table 9.

  Example:

  ```
  $ flex-installer -b bootpartition_arm64_lts_5.4.tgz -r rootfs_lsdk2004_ubuntu_main_arm64.tgz -R
  rootfs_lsdk2004_yocto_tiny_arm64.tgz -f firmware_ls1046ardb_uboot_sdboot.img -d /dev/sdx
  ```

  NOTE

  To boot the second distro from partition 3 of the storage device, run `setenv devpart_root 3;boot` in U-Boot instead from the default partition 4.

- **To deploy custom LSDK images on a reference board running TinyLinux.**

  1. After the reference board boots automatically, check whether the reference board boots TinyLinux or whether it boots LSDK userland based distribution. TinyLinux is a non-customizable prebuilt ramdisk rootfs deployed in flash media on the reference board. This rootfs fits into the firmware image on flash and is therefore called tiny.
     - If the reference board boots TinyLinux, proceed to step #3.
     - If the reference board boots LSDK based distribution, it means that an older Ubuntu based distribution may already be present on the storage device that is plugged into the reference board. In this case, go to step #2 first, to force the board to boot TinyLinux.
  2. Force the reference board to boot TinyLinux.
     - Reboot the board and stop autoboot to enter U-Boot prompt.
     - Enter following command at the U-Boot prompt to boot the board to the TinyLinux environment for executing flex-installer:

       ```
       => run sd_bootcmd   (for SD/eMMC boot)
       => run nor_bootcmd  (for IFC-NOR boot)
       => run qspi_bootcmd (for QSPI-NOR boot)
       => run xspi_bootcmd (for FlexSPI-NOR boot)
       ```
  3. Login to TinyLinux as "root" and bring up a network interface.

     Dynamic IP address assignment:

     ```
     $ udhcpc -i <port name in TinyLinux>
     ```

     Static IP address assignment:

     ```
     $ ifconfig <port name in TinyLinux> <IP address> netmask <netmask address> up
     ```

     The port name in Linux TinyLinux corresponding to each of the ports on the reference board chassis is given in section "<board> reference information" in the board specific LSDK Quick Start Guide.
  4. Use flex-installer to create and format the partitions for storage device (USB/SATA/SD).

     ```
     $ flex-installer -i pf -d <device>    # use default partition_list
     or
     $ flex-installer -i pf -d <device> -p <partition_list>  # specify custom partition_list
     ```

For list of supported values for `<device>`, see Table 9.

5. Change current path to the Partition 4 of target storage device.

```
$ cd /mnt/mmcblk0p4 (or /mnt/sdx4)
```

6. Download `bootpartition_<arch>_<version>.tgz` and `rootfs_<lsdk_version>_<distrotype>_<distroscale>_<arch>.tgz` using the wget or scp command.
7. Deploy boot partition and LSDK userland to the target device.

Usage:

```
flex-installer -b <bootpartition> -r <rootfs> -d <device>
```

For list of supported values for `<device>`, `<bootpartition>`, `<rootfs>`, see Table 9.

Example:

```
flex-installer -b bootpartition_LS_arm64_lts_5.4.tgz -r rootfs_lsdk2004_ubuntu_main_arm64.tgz -
d /dev/sdx
```

- **To only install composite firmware to the target storage drive on a Linux host machine or a reference board.**

  Usage:

```
$ flex-installer -f <firmware> -d <device>
```

  For list of supported values for `<firmware>`, `<device>`, see Table 9.

  Example:

```
$ flex-installer -f firmware_ls1046ardb_uboot_sdboot.img -d /dev/sdx
```

- **To partition and format target storage device with specified number and size of partitions instead of using the default partitions.**

  Usage:

```
flex-installer -i pf -p <partitions-list> -d <device>
```

  For list of supported values for `<device>`, see Table 9.

  Example:

```
$ flex-installer -i pf -d /dev/sdx    (default "-p 4P=100M:1G:6G:-1" for 4 partitions)
$ flex-installer -i pf -p 5P=200M:1G:6G:8G:-1 -d /dev/sdx   (specify 5 partitions, '-1' indicates
the rest space of the target storage device for the last partition)
```

4.1.3 Manually download LSDK images

You can manually download LSDK images instead of downloading the images via flex-installer. Use the following commands to manually download specific version of LSDK images and then use the flex-installer commands in Download and deploy LSDK images with flex-installer in Linux environment to deploy the downloaded images.

To manually download specific version of a LSDK image.

Usage:

```
$ wget https://www.nxp.com/lgfiles/sdk/<lsdk-version>/firmware_<machine>_<bootloader>_<boottype>.img
$ wget https://www.nxp.com/lgfiles/sdk/<lsdk-version>/bootpartition_LS_<arch>_lts_<version>.tgz
$ wget https://www.nxp.com/lgfiles/sdk/<lsdk-version>/rootfs_<lsdk-
```

```
version>_LS_<arch>_<distroscale>.tgz
$ wget https://www.nxp.com/lgfiles/sdk/<lsdk-version>/firmware_lx2160ardb_rev2_uboot_xspiboot.img
```

For list of supported values for `<machine>`, `<bootloader>`, `<boottype>`, `arch`, `distroscale` see Table 9.

Example:

```
$ wget https://www.nxp.com/lgfiles/sdk/lsdk2004/firmware_lx2160ardb_uboot_sdboot.img
$ wget https://www.nxp.com/lgfiles/sdk/lsdk2004/bootpartition_LS_arm64_lts_4.19.tgz
$ wget https://www.nxp.com/lgfiles/sdk/lsdk2004/rootfs_lsdk2004_ubuntu_lite_arm64.tgz
$ wget https://www.nxp.com/lgfiles/sdk/lsdk2004-update-290520/bootpartition_LS_arm64_lts_5.4.tgz
$ wget https://www.nxp.com/lgfiles/sdk/lsdk2004-update-290520/rootfs_lsdk2004_ubuntu_main_arm64.tgz
$ wget https://www.nxp.com/lgfiles/sdk/lsdk2004/rootfs_lsdk2004_yocto_tiny_arm64.tgz
```

4.1.4 LSDK Quick Start Guide for FRWY-LS1012A

4.1.4.1 Introduction

The following sections describe the procedure to program LSDK composite firmware for FRWY-LS1012A, and the most common use case procedure to automatically download and deploy LSDK default images to FRWY-LS1012A using flex-installer. For other optional/special use case examples, see Download and deploy LSDK images with flex-installer in Linux environment.

For more information on the different components of the board and on how to configure and boot the board, see Layerscape LS1012A Freeway Board Getting Started Guide.

4.1.4.2 FRWY-LS1012A reference information

This section provides general information about FRWY-LS1012A which may come in handy as a reference while completing steps for deploying LSDK that follow.

Ethernet port map

The table below shows the mapping between the labels on the FRWY-LS1012A, port in U-Boot and port in Linux.

Table 10. Ethernet port mapping

Label on board	Port in U-Boot	Port in Linux
ETH1	pfe_eth0	eth0
ETH2	pfe_eth1	eth1

System memory map

In 64-bit u-boot, there is a 1:1 mapping of physical address and effective address. After system startup, the boot loader maps physical address and effective address as shown in the following table:

Start Physical Address	End Physical Address	Memory Type	Size
0x00_0000_0000	0x00_000F_FFFF	Secure Boot ROM	1MB
0x00_0100_0000	0x00_0FFF_FFFF	CCSR	240MB
0x00_1000_0000	0x00_1000_FFFF	OCRAM1	64KB
0x00_1001_0000	0x00_1001_FFFF	OCRAM2	64KB

Table continues on the next page...

Table continued from the previous page...

0x00_4000_0000	0x00_47FF_FFFF	QSPI	128MB
0x00_8000_0000	0x00_FFFF_FFFF	DRAM	2GB
0x40_0000_0000	0x47_FFFF_FFFF	PCI Express1	32G

Supported boot options

FRWY-LS1012A supports the following boot options:

- QSPI NOR Flash

NOTE

QSPI NOR flash is the only boot option available on the FRWY-LS1012A.

The FRWY-LS1012A supports onboard Winbond W25M161AWEIT single/dual/quad-SPI serial flash memory with 16 Mbit NOR and 1 Gbit NAND space in a single chip.

```
U-Boot 2018.09-09790-gee0946537f (Nov 29 2018 - 18:08:58 +0800)

SoC:  LS1012AE Rev2.0 (0x87040020)
Clock Configuration:
       CPU0(A53):1000 MHz
       Bus:      250  MHz  DDR:      1000 MT/s
Reset Configuration Word (RCW):
       00000000: 0800000a 00000000 00000000 00000000
       00000010: 33050000 c000000c 40000000 00001800
       00000020: 00000000 00000000 00000000 000c47f2
       00000030: 00000000 1082a120 00000096 00000000
I2C:   ready
DRAM:  958 MiB
WARNING: Calling __hwconfig without a buffer and before environment is ready
Using SERDES1 Protocol: 13061 (0x3305)
MMC:   FSL_SDHC: 0, FSL_SDHC: 1
Loading Environment from SPI Flash... SF: Detected w25q16dw with page size 256 Bytes, erase size 4
KiB, total 2 MiB
OK
In:    serial
Out:   serial
Err:   serial
Model: FRWY-LS1012A Board
Board: FRWY-LS1012A Version: RevC Net:   PFE class pe firmware
PFE tmu pe firmware
eth0: pfe_eth0, eth1: pfe_eth1
=>
```

4.1.4.3 Program LSDK composite firmware image

To program LSDK composite firmware image in QSPI NOR flash on FRWY-LS1012A:

1. Download the firmware (from NXP website) to the Linux host machine.

   ```
   $ wget https://www.nxp.com/lgfiles/sdk/lsdk2004/firmware_ls1012afrwy_uboot_qspiboot.img
   ```

2. Under U-Boot, download the firmware to the reference board using one of the following options:

- Load firmware from the TFTP server

```
=> tftp $load_addr firmware_ls1012afrwy_uboot_qspiboot.img
```

- Load firmware image from partition on mass storage device (SD, USB, or SATA)

```
=> load mmc <device:partition> $load_addr firmware_ls1012afrwy_uboot_qspiboot.img
```

For example:

```
=> load mmc 0:2 $load_addr firmware_ls1012afrwy_uboot_qspiboot.img
```

Or

```
=> load usb <device:partition> $load_addr firmware_ls1012afrwy_uboot_qspiboot.img
```

Or

```
=> load scsi <device:partition> $load_addr firmware_ls1012afrwy_uboot_qspiboot.img
```

NOTE

Use the following command if the SD card is formatted/created using LSDK flex-installer command:

```
=> load <interface> [<dev[:part]> [<addr> [<filename> [bytes [pos]]]]]
```

For example:

```
=> load mmc 0:2 $load_addr firmware_ls1012afrwy_uboot_qspiboot.img
```

Use the following command if the SD card is formatted/created on a Windows PC:

```
=> fatload <interface> [<dev[:part]> [<addr> [<filename> [bytes [pos]]]]]
```

For example:

```
=> fatload mmc 0:2 $load_addr firmware_ls1012afrwy_uboot_qspiboot.img
```

Use the following command if the SD card is formatted/created on a Linux PC:

```
=> ext2load <interface> [<dev[:part]> [<addr> [<filename> [bytes [pos]]]]]
```

For example:

```
=> ext2load mmc 0:2 $load_addr firmware_ls1012afrwy_uboot_qspiboot.img
```

Also note that LSDK flex-installer command puts the images on the IInd partition, so `0:2` is used in the `load` command. If the SD card is formatted on Windows PC or Linux PC for single partition only, then `0` should be used instead of `0:2` in the `fatload`/`ext2load` command.

3. Program the firmware to QSPI NOR flash.

```
=> sf probe 0:0
=> sf erase 0 +$filesize && sf write $load_addr 0 $filesize
```

4. Reset and boot the board from QSPI NOR flash. The system will automatically boot up TinyDistro (login using root/root) or LSDK distro (login using root/root or user/user) available on the removable storage device.

```
=> reset
```

4.1.4.4 Automatically download and deploy LSDK images

To automatically download and deploy LSDK images to a board using a removable storage device which can be connected to a local Linux host machine:

1. Connect the removable storage device to the Linux host machine.
2. Download `flex-installer` to deploy LSDK images.

```
$ wget https://www.nxp.com/lgfiles/sdk/lsdk2004-update-290520/flex-installer && chmod +x flex-installer && sudo mv flex-installer /usr/bin
```

3. Execute the following flex-installer command to automatically install LSDK default `rootfs_lsdk2004_LS_arm64_main.tgz` and `bootpartition_LS_arm64_lts_4.19.tgz`.

```
$ flex-installer -i auto -m ls1012afrwy -d <device>
```

NOTE

- Use the command `cat /proc/partitions` to see a list of devices and their sizes to make sure that the correct device names have been chosen.
- The SD/USB/SATA storage drive in the Linux PC is detected as /dev/sdX, where X is a letter such as a, b, c. Make sure to choose the correct device name, because data on this device will be replaced.
- If the Linux host machine supports read/write SD card directly without an extra SD card reader device, the device name of SD card is typically mmcblk0.

4. Unplug removable storage device from the Linux host and plug into the reference board.
5. Make sure the DIP switch settings on the board are correct to boot from the desired boot medium.
6. Power-on the board. The system automatically boots up to the LSDK distro.
   - Use the following default credentials to log onto to the LSDK distro:
     - root/root, or
     - user/user

To automatically download and deploy LSDK images directly to the target storage drive on a board:

1. Plug the storage device into the reference board.
2. Check DIP switch settings for the desired boot type.
3. Power-on the board and execute the following command under U-boot prompt to boot the board to TinyDistro.

   TinyDistro is a non-customizable prebuilt ramdisk rootfs. As LS1012aFRWY has only 2 MB QSPI flash, rootfs cannot fit into the firmware image on the QSPI flash memory. You need to load the tinydistro by tftp or sd/usb device.

```
=> tftp 0x92000000 tftp_path/lsdk2004_yocto_tiny_LS_arm64.itb; pfe stop;
bootm 0x92000000#ls1012afrwy
```

NOTE

For steps to generate and install tinydistro, see "LSDK Yocto-based Tiny and Devel Userland" in section How to build LSDK with Flexbuild

4. Login to TinyDistro as “root” and bring up a network interface.

   Dynamic IP address assignment:

   ```
   $ udhcpc -i <port name in TinyDistro>
   ```

   Static IP address assignment:

   ```
   $ ifconfig <port name in TinyDistro> <IP address> netmask <netmask address> up
   ```

   The port name in Linux TinyDistro corresponding to each of the ports on the reference board chassis is given in section FRWY-LS1012A reference information

5. Download `flex-installer` to deploy LSDK images.

   ```
   $ wget https://www.nxp.com/lgfiles/sdk/lsdk2004-update-290520/flex-installer && chmod +x flex-installer && sudo mv flex-installer /usr/bin
   ```

6. Execute the following flex-installer command to automatically install LSDK default `rootfs_lsdk2004_LS_arm64_main.tgz` and `bootpartition_LS_arm64_lts_4.19.tgz`.

   ```
   $ flex-installer -i auto -m ls1012afrwy -d <device>
   ```

   NOTE

   - Use the command `cat /proc/partitions` to see a list of devices and their sizes to make sure that the correct device names have been chosen.
   - The SD/USB/SATA storage drive in the Linux PC is detected as /dev/sdX, where X is a letter such as a, b, c. Make sure to choose the correct device name, because data on this device will be replaced.
   - If the Linux host machine supports read/write SD card directly without an extra SD card reader device, the device name of SD card is typically mmcblk0.

7. Power-on the board. The system automatically boots up to the LSDK distro.
   - Use the following default credentials to log onto to the LSDK distro:
     - root/root, or
     - user/user

4.1.5 LSDK Quick Start Guide for LS1012ARDB

4.1.5.1 Introduction

The following sections describe the procedure to program LSDK composite firmware for LS1012ARDB, and the most common use case procedure to automatically download and deploy LSDK default images to LS1012ARDB using flex-installer. For other optional/special use case examples, see Download and deploy LSDK images with flex-installer in Linux environment.

For more information on the different components of the board and on how to configure and boot the board, see QorIQ LS1012A Reference Design Board Getting Started Guide.

4.1.5.2 LS1012ARDB reference information

This section provides general information about LS1012ARDB which may come in handy as a reference while completing steps for deploying LSDK that follow.

Ethernet port map

The table below shows how the Ethernet ports can be mapped to Linux, U-Boot, and labels on the 1U box.

Lable on 1U box	Port name in U-Boot	Port name in Linux	Comments
ETH_1	pfe_eth0	eth0	1G SGMII
ETH_2	pfe_eth1	eth1	1G RGMII

The following figures show the LS1012ARDB chassis front and rear views:

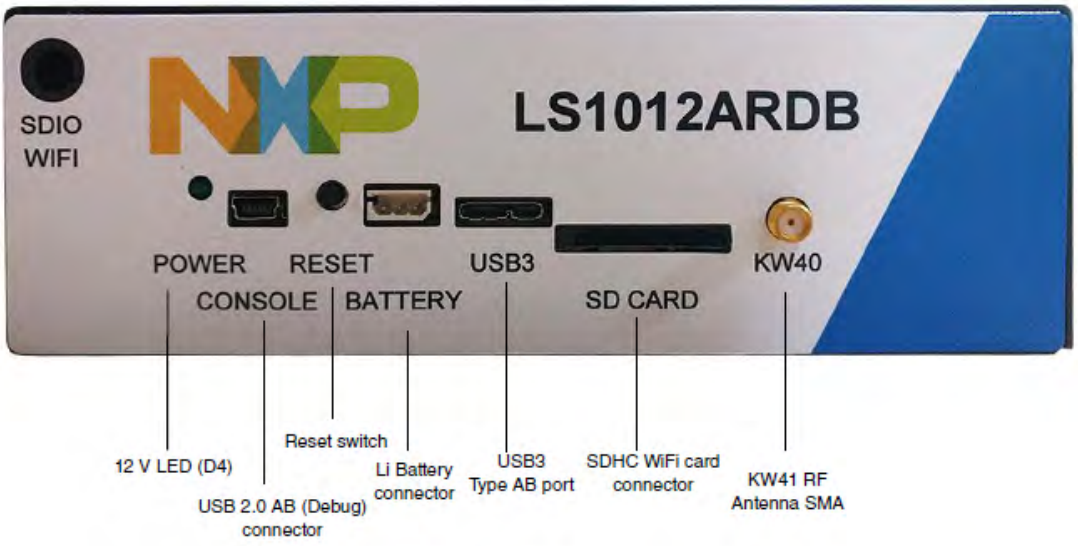

Front panel

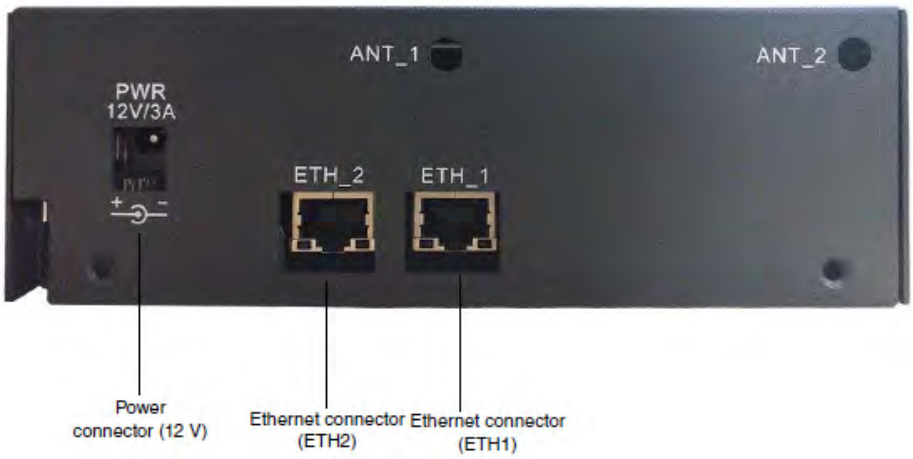

Back panel

System memory map

Start physical address	End physical address	Memory type	Size
0x00_0000_0000	0x00_000F_FFFF	Secure Boot ROM	1MB
0x00_0100_0000	0x00_0FFF_FFFF	CCSR	240MB

Table continues on the next page...

Table continued from the previous page...

0x00_1000_0000	0x00_1000_FFFF	OCRAM1	64KB
0x00_1001_0000	0x00_1001_FFFF	OCRAM2	64 KB
0x00_4000_0000	0x00_5FFF_FFFF	QSPI	512MB
0x00_8000_0000	0x00_FFFF_FFFF	DRAM	2GB
0x08_8000_0000	0x0F_FFFF_FFFF	DRAM2	30G
0x40_0000_0000	0x47_FFFF_FFFF	PCI Express1	32G

Supported boot options

LS1012ARDB supports the following boot options:

- QSPI NOR flash

On-board switch options

The RDB has user selectable switches for evaluating different boot options for the LS1012A device as given in the table below ('0' is OFF, '1' is ON).

Table 11. Booting from QSPI NOR flash bank1

	1	2	3	4	5	6	7	8
SW1	1	0	1	0	0	1	1	0
SW2	0	0	0	0	0	0	0	0

Table 12. Booting from QSPI NOR flash bank2

	1	2	3	4	5	6	7	8
SW1	1	0	1	0	0	1	1	0
SW2	0	0	0	0	0	0	1	0

Flash bank usage

The LS1012ARDB supports on-board Spansion S25FS512SAGMFI011 quad-SPI serial flash memory with 64 MB space. There are two virtual banks on the RDB that can be selected through DIP switch settings (see Table 1 and Table 2 above).

To protect the default U-Boot in QSPI NOR flash bank1, it is a convention employed by NXP to deploy work images into QSPI NOR flash bank2, and then switch to QSPI NOR flash bank2 for testing. Switching to flash2 can be done in software using I2C commands and effectively swaps QSPI NOR flash bank1 with QSPI NOR flash bank2. This protects QSPI NOR flash bank1 and keeps the board bootable under all circumstances.

```
U-Boot 2018.09-g2c3c67e85e (Dec 11 2018 - 03:42:09 +0800)

SoC:  LS1012AE Rev2.0 (0x87040020)
Clock Configuration:
       CPU0(A53):1000 MHz
       Bus:      250  MHz  DDR:      1000 MT/s
Reset Configuration Word (RCW):
       00000000: 0800000a 00000000 00000000 00000000
       00000010: 35080000 c000000c 40000000 00001800
```

```
       00000020: 00000000 00000000 00000000 00014571
       00000030: 00000000 18c2a120 00000096 00000000
I2C:   ready
DRAM:  958 MiB
Using SERDES1 Protocol: 13576 (0x3508)
WARNING: Calling __hwconfig without a buffer and before environment is ready
MMC:   FSL_SDHC: 0, FSL_SDHC: 1
Loading Environment from SPI Flash... SF: Detected s25fs512s with page size 256 Bytes, erase size 256
KiB, total 64 MiB
*** Warning - bad CRC, using default environment

In:    serial
Out:   serial
Err:   serial
Model: LS1012A RDB Board
Board: LS1012ARDB Version: RevE, boot from QSPI: bank2
Net:   PFE class pe firmware
PFE tmu pe firmware

Warning: pfe_eth0 (eth0) using random MAC address - c2:3e:18:ce:4a:09
eth0: pfe_eth0
Warning: pfe_eth1 (eth1) using random MAC address - 8e:c0:9f:01:6b:d0
, eth1: pfe_eth1
Hit any key to stop autoboot:  0
=>
```

How to boot from QSPI NOR flash bank2

NOTE

The I2C IO-expander can be used to override the on-board DIP switch settings.

1. To check which bank booted, refer to the U-Boot log. You will see either "QSPI: bank 1" or "QSPI: bank2" printed in the log.

   For example:. Board: LS1012ARDB Version: unkown, boot from QSPI: bank1

2. i2C command to switch from QSPI NOR flash bank1 to QSPI NOR flash bank2 **“ i2c mw 0x24 0x7 0xfc; i2c mw 0x24 0x3 0xf5 “**
3. Program QSPI flash as per flash layout
4. To boot from QSPI NOR flash bank2 give “**`reset`**” command.
5. To move back to QSPI NOR flash bank1 from QSPI NOR flash bank2, power on/off the board or use **“i2c mw 0x24 0x3 0xf4 “** and then enter “**`reset`**” command.

4.1.5.3 Program LSDK composite firmware image

To program LSDK composite firmware image in QSPI NOR flash on LS1012ARDB:

1. Download the firmware (from NXP website) to the Linux host machine.

   ```
   $ wget https://www.nxp.com/lgfiles/sdk/lsdk2004/firmware_ls1012ardb_uboot_qspiboot.img
   ```

2. Reset the board to boot from QSPI NOR flash 1. Check U-Boot log for message.

   ```
   Board: LS1012ARDB Version: unknown, boot from QSPI: bank1
   ```

3. Switch from QSPI NOR flash 1 to flash 2:

```
=> i2c mw 0x24 0x7 0xfc
=> i2c mw 0x24 0x3 0xf5
```

4. Under U-Boot, download the firmware to the reference board using one of the following options:
   - Load firmware from the TFTP server

```
=> tftp $load_addr firmware_ls1012ardb_uboot_qspiboot.img
```

   - Load firmware image from partition on mass storage device (SD, USB, or SATA)

```
=> load mmc <device:partition> $load_addr firmware_ls1012ardb_uboot_qspiboot.img
```

     For example:

```
=> load mmc 0:2 $load_addr firmware_ls1012ardb_uboot_qspiboot.img
```

     Or

```
=> load usb <device:partition> $load_addr firmware_ls1012ardb_uboot_qspiboot.img
```

     Or

```
=> load scsi <device:partition> $load_addr firmware_ls1012ardb_uboot_qspiboot.img
```

NOTE

Use the following command if the SD card is formatted/created using LSDK flex-installer command:

```
=> load <interface> [<dev[:part]> [<addr> [<filename> [bytes [pos]]]]]
```

For example:

```
=> load mmc 0:2 $load_addr firmware_ls1012ardb_uboot_qspiboot.img
```

Use the following command if the SD card is formatted/created on a Windows PC:

```
=> fatload <interface> [<dev[:part]> [<addr> [<filename> [bytes [pos]]]]]
```

For example:

```
=> fatload mmc 0:2 $load_addr firmware_ls1012ardb_uboot_qspiboot.img
```

Use the following command if the SD card is formatted/created on a Linux PC:

```
=> ext2load <interface> [<dev[:part]> [<addr> [<filename> [bytes [pos]]]]]
```

For example:

```
=> ext2load mmc 0:2 $load_addr firmware_ls1012ardb_uboot_qspiboot.img
```

Also note that LSDK flex-installer command puts the images on the IInd partition, so `0:2` is used in the `load` command. If the SD card is formatted on Windows PC or Linux PC for single partition only, then `0` should be used instead of `0:2` in the `fatload`/`ext2load` command.

5. Program the firmware to QSPI NOR flash 2.

```
=> sf probe 0:0
=> sf erase 0 +$filesize && sf write $load_addr 0 $filesize
```

6. Reset and boot the board from QSPI NOR flash 2. The system will automatically boot up TinyDistro (login using root/root) or LSDK distro (login using root/root or user/user) available on the removable storage device.

```
=> reset
```

4.1.5.4 Automatically download and deploy LSDK images

To automatically download and deploy LSDK images to a board using a removable storage device which can be connected to a local Linux host machine:

1. Connect the removable storage device to the Linux host machine.
2. Download `flex-installer` to deploy LSDK images.

```
$ wget https://www.nxp.com/lgfiles/sdk/lsdk2004-update-290520/flex-installer && chmod +x flex-
installer && sudo mv flex-installer /usr/bin
```

3. Execute the following flex-installer command to automatically install LSDK default `rootfs_lsdk2004_LS_arm64_main.tgz` and `bootpartition_LS_arm64_lts_4.19.tgz`.

```
$ flex-installer -i auto -m ls1012ardb -d <device>
```

NOTE

- Use the command `cat /proc/partitions` to see a list of devices and their sizes to make sure that the correct device names have been chosen.
- The SD/USB/SATA storage drive in the Linux PC is detected as /dev/sdX, where X is a letter such as a, b, c. Make sure to choose the correct device name, because data on this device will be replaced.
- If the Linux host machine supports read/write SD card directly without an extra SD card reader device, the device name of SD card is typically mmcblk0.

4. Unplug removable storage device from the Linux host and plug into the reference board.
5. Make sure the DIP switch settings on the board are correct to boot from the desired boot medium.
6. Power-on the board. The system automatically boots up to the LSDK distro.
   - Use the following default credentials to log onto to the LSDK distro:
     - root/root, or
     - user/user

To automatically download and deploy LSDK images directly to the target storage drive on a board:

1. Plug the storage device into the reference board.
2. Check DIP switch settings for the desired boot type.
3. Power-on the board and execute the following command under U-boot prompt to boot the board to TinyDistro. TinyDistro is a non-customizable prebuilt ramdisk rootfs deployed in flash media on the reference board which can be used to execute the flex-installer commands. This rootfs fits into the firmware image on flash and is therefore called tiny.

```
=> run qspi_bootcmd
```

4. Login to TinyDistro as “root” and bring up a network interface.

Dynamic IP address assignment:

```
$ udhcpc -i <port name in TinyDistro>
```

Static IP address assignment:

```
$ ifconfig <port name in TinyDistro> <IP address> netmask <netmask address> up
```

The port name in Linux TinyDistro corresponding to each of the ports on the reference board chassis is given in section LS1012ARDB reference information

5. Download `flex-installer` to deploy LSDK images.

```
$ wget https://www.nxp.com/lgfiles/sdk/lsdk2004-update-290520/flex-installer && chmod +x flex-installer && sudo mv flex-installer /usr/bin
```

6. Execute the following flex-installer command to automatically install LSDK default `rootfs_lsdk2004_LS_arm64_main.tgz` and `bootpartition_LS_arm64_lts_4.19.tgz`.

```
$ flex-installer -i auto -m ls1012ardb -d <device>
```

NOTE

- Use the command `cat /proc/partitions` to see a list of devices and their sizes to make sure that the correct device names have been chosen.
- The SD/USB/SATA storage drive in the Linux PC is detected as /dev/sdX, where X is a letter such as a, b, c. Make sure to choose the correct device name, because data on this device will be replaced.
- If the Linux host machine supports read/write SD card directly without an extra SD card reader device, the device name of SD card is typically mmcblk0.

7. Power-on the board. The system automatically boots up to the LSDK distro.
   - Use the following default credentials to log onto to the LSDK distro:
     - root/root, or
     - user/user

4.1.6 LSDK Quick Start Guide for TWR-LS1021A

4.1.6.1 Introduction

The following sections describe the procedure to program LSDK composite firmware for TWR-LS1021A, and the most common use case procedure to automatically download and deploy LSDK default images to TWR-LS1021A using flex-installer. For other optional/special use case examples, see Download and deploy LSDK images with flex-installer in Linux environment.

For more information on the different components of the board and on how to configure and boot the board, see QorIQ TWR-LS1021A Reference Design Board Getting Started Guide.

4.1.6.2 TWR-LS1021A reference information

This section provides general information about TWR-LS1021A which may come in handy as a reference while completing steps for deploying LSDK that follow.

Port map

The table below shows the mapping between U-Boot port name and Linux TinyDistro port name.

Port name in U-Boot	Port name in TinyDistro
eTSEC1	eth0
eTSEC2	eth1
eTSEC3	eth2

System memory map

Start Physical Address	End Physical Address	Memory Type	Size
0x0100_0000	0x0FFF_FFFF	CCSR	240MB
0x1000_0000	0x1000_FFFF	OCRAM0	64KB
0x1001_0000	0x1001_FFFF	OCRAM1	64 KB
0x2000_0000	0x20FF_FFFF	DCSR	16MB
0x4000_0000	0x5FFF_FFFF	QSPI	512MB
0x6000_0000	0x67FF_FFFF	NOR Flash	128MB
0x7FB0_0000	0x7FB0_0FFF	Board CPLD	4KB
0x8000_0000	0xFFFF_FFFF	DDR	2GB

Supported boot options

TWR-LS1021A supports the following boot options:

- NOR
- SD

On-board switch options

The RDB has user selectable switches for evaluating different boot options for the TWR-LS1021A device as given in the table below ('0' is OFF, '1' is ON).

Boot source	SW2[1:8]	SW3[1:8]
NOR bank 0 (default)	10001111	01100101
NOR bank 1	10001111	01101101
SD card	00101111	01100101

Note that changing the boot device configuration from the default setting may require additional changes in the RCW or in other code images. For information on RCW naming convention for TWR-LS1021A see https://source.codeaurora.org/external/qoriq/qoriq-components/rcw/tree/ls1021atwr/README?h=github.com.qoriq-os/integration

Flash Bank usage

TWR-LS1021A provides a special feature that allows a single NOR flash to be divided into multiple parts called “banks”. This is done by board-level logic that modifies address signals. As there is only one NOR flash physically, the banks are sometimes called "virtual" banks. The benefit of this feature is that it allows more than one set of images to be independently deployed to one NOR flash. This is very helpful during development because the U-Boot image in one bank can be used to program an image set into a different bank. If the new images are flawed, the old images are still functional. The NOR flash on TWR-LS1021A is divided into two banks. The banks are called bank 0 and bank 1. To determine the current bank, refer to the example U-Boot log given below:

```
U-Boot 2018.09-g6c99ca4519 (Dec 04 2018 - 01:41:57 +0800)

CPU:   Freescale LayerScape LS1021E, Version: 2.0, (0x87081120)
Clock Configuration:
       CPU0(ARMV7):1200 MHz,
       Bus:300  MHz, DDR:800  MHz (1600 MT/s data rate),
Reset Configuration Word (RCW):
       00000000: 0608000c 00000000 00000000 00000000
       00000010: 30000000 00007900 e0025a00 21046000
       00000020: 00000000 00000000 00000000 18000000
       00000030: 00080000 481b7340 00000000 00000000
Model: LS1021A TWR Board
Board: LS1021ATWR
CPLD:  V3.0
PCBA:  V2.0
VBank: 1
I2C:   ready
DRAM:  1 GiB
Using SERDES1 Protocol: 48 (0x30)
Not a microcode
Flash: 128 MiB
MMC:   FSL_SDHC: 0
Loading Environment from Flash... OK
EEPROM: NXID v16777216
In:    serial
Out:   serial
Err:   serial
SEC0: RNG instantiated
Net:   eTSEC1 is in sgmii mode.
eTSEC2 is in sgmii mode.
PCIe0: pcie@3400000 Root Complex: x1 gen1
PCIe1: pcie@3500000 disabled
e1000: 00:15:17:80:af:43
       eTSEC1, eTSEC2, eTSEC3, e1000#0 [PRIME]
Warning: e1000#0 MAC addresses don't match:
Address in SROM is         00:15:17:80:af:43
Address in environment is  00:e0:0c:00:66:03

Warning: e1000#0 failed to set MAC address
```

Boot option switching

Boot option switching can be performed in U-Boot using the following commands:

- Switch to NOR bank 0 (default):

```
=>boot_bank 0
```

- Switch to NOR bank 1:

```
=>boot_bank 1
```

4.1.6.3 Program LSDK composite firmware image

This topic explains steps to program NOR firmware image to IFC NOR flash on TWR-LS1021A and SD firmware image to SD card on TWR-LS1021A.

To program LSDK composite NOR firmware image to IFC NOR flash on TWR-LS1021A:

1. Download the NOR firmware (from NXP website) to the Linux host machine.

```
$ wget https://www.nxp.com/lgfiles/sdk/lsdk2004/firmware_ls1021atwr_uboot_norboot.img
```

2. Reboot the board from NOR bank 0 and stop autoboot to enter U-Boot prompt.
3. Under U-Boot, download the firmware to the reference board using one of the following options:
   - Load firmware from the TFTP server

```
=> tftp $load_addr firmware_ls1021atwr_uboot_norboot.img
```

   - Load firmware image from partition on mass storage device (SD, USB, or SATA)

```
=> load mmc <device:partition> $load_addr firmware_ls1021atwr_uboot_norboot.img
```

     For example:

```
=> load mmc 0:2 $load_addr firmware_ls1021atwr_uboot_norboot.img
```

     Or

```
=> load usb <device:partition> $load_addr firmware_ls1021atwr_uboot_norboot.img
```

     Or

```
=> load scsi <device:partition> $load_addr firmware_ls1021atwr_uboot_norboot.img
```

NOTE

Use the following command if the SD card is formatted/created using LSDK flex-installer command:

```
=> load <interface> [<dev[:part]> [<addr> [<filename> [bytes [pos]]]]]
```

For example:

```
=> load mmc 0:2 $load_addr firmware_ls1021atwr_uboot_norboot.img
```

Use the following command if the SD card is formatted/created on a Windows PC:

```
=> fatload <interface> [<dev[:part]> [<addr> [<filename> [bytes [pos]]]]]
```

For example:

```
=> fatload mmc 0:2 $load_addr firmware_ls1021atwr_uboot_norboot.img
```

Use the following command if the SD card is formatted/created on a Linux PC:

```
=> ext2load <interface> [<dev[:part]> [<addr> [<filename> [bytes [pos]]]]]
```

For example:

```
=> ext2load mmc 0:2 $load_addr firmware_ls1021atwr_uboot_norboot.img
```

Also note that LSDK flex-installer command puts the images on the IInd partition, so `0:2` is used in the `load` command. If the SD card is formatted on Windows PC or Linux PC for single partition only, then `0` should be used instead of `0:2` in the `fatload`/`ext2load` command.

4. Program the composite firmware into IFC NOR flash.
   - To program alternate bank:

     ```
     => protect off 64000000 +$filesize && erase 64000000 +$filesize && cp.b $load_addr 64000000
     $filesize
     ```

   - To program current bank:

     ```
     => protect off 60000000 +$filesize && erase 60000000 +$filesize && cp.b $load_addr 60000000
     $filesize
     ```

5. Reset and boot the board from IFC NOR flash. The system will automatically boot up TinyDistro (login using root/root) or LSDK distro (login using root/root or user/user) available on the removable storage device.
   - To boot from NOR flash bank 1.

     ```
     => boot_bank 1
     ```

   - To boot from NOR flash bank 0.

     ```
     => boot_bank 0
     ```

To program LSDK composite SD firmware image to SD card on TWR-LS1021A:

1. Download the SD firmware (from NXP website) to the Linux host machine.

   ```
   $ wget https://www.nxp.com/lgfiles/sdk/lsdk2004/firmware_ls1021atwr_uboot_sdboot.img
   ```

2. Reboot the board from NOR bank 0 and stop autoboot to enter U-Boot prompt.

3. Under U-Boot, download the firmware to the reference board using one of the following options:
   - Load firmware from the TFTP server

     ```
     => tftp $load_addr firmware_ls1021atwr_uboot_sdboot.img
     ```

   - Load firmware image from partition on mass storage device (SD, USB, or SATA)

     ```
     => load mmc <device:partition> $load_addr firmware_ls1021atwr_uboot_sdboot.img
     ```

     For example:

     ```
     => load mmc 0:2 $load_addr firmware_ls1021atwr_uboot_sdboot.img
     ```

     Or

     ```
     => load usb <device:partition> $load_addr firmware_ls1021atwr_uboot_sdboot.img
     ```

     Or

     ```
     => load scsi <device:partition> $load_addr firmware_ls1021atwr_uboot_sdboot.img
     ```

     NOTE

     Use the following command if the SD card is formatted/created using LSDK flex-installer command:

     ```
     => load <interface> [<dev[:part]> [<addr> [<filename> [bytes [pos]]]]]
     ```

     For example:

     ```
     => load mmc 0:2 $load_addr firmware_ls1021atwr_uboot_sdboot.img
     ```

     Use the following command if the SD card is formatted/created on a Windows PC:

     ```
     => fatload <interface> [<dev[:part]> [<addr> [<filename> [bytes [pos]]]]]
     ```

     For example:

     ```
     => fatload mmc 0:2 $load_addr firmware_ls1021atwr_uboot_sdboot.img
     ```

     Use the following command if the SD card is formatted/created on a Linux PC:

     ```
     => ext2load <interface> [<dev[:part]> [<addr> [<filename> [bytes [pos]]]]]
     ```

     For example:

     ```
     => ext2load mmc 0:2 $load_addr firmware_ls1021atwr_uboot_sdboot.img
     ```

     Also note that LSDK flex-installer command puts the images on the IInd partition, so `0:2` is used in the `load` command. If the SD card is formatted on Windows PC or Linux PC for single partition only, then `0` should be used instead of `0:2` in the `fatload`/`ext2load` command.

4. Write the firmware to SD card.

   ```
   => mmc dev 0; mmc write $load_addr 8 1f000
   ```

5. Make sure the DIP switch settings on the board are for SD card.

6. Reset and boot the board from SD card. The system will automatically boot up TinyDistro (login using root/root) or LSDK distro (login using root/root or user/user) available on the removable storage device.

4.1.6.4 Automatically download and deploy LSDK images

To automatically download and deploy LSDK images to a board using a removable storage device which can be connected to a local Linux host machine:

1. Connect the removable storage device to the Linux host machine.
2. Download `flex-installer` to deploy LSDK images.

```
$ wget https://www.nxp.com/lgfiles/sdk/lsdk2004-update-290520/flex-installer && chmod +x flex-installer && sudo mv flex-installer /usr/bin
```

3. Execute the following flex-installer command to automatically install LSDK default `rootfs_lsdk2004_LS_arm64_main.tgz` and `bootpartition_LS_arm64_lts_4.19.tgz`.

```
$ flex-installer -i auto -m ls1021atwr -d <device>
```

NOTE

- Use the command `cat /proc/partitions` to see a list of devices and their sizes to make sure that the correct device names have been chosen.
- The SD/USB/SATA storage drive in the Linux PC is detected as /dev/sdX, where X is a letter such as a, b, c. Make sure to choose the correct device name, because data on this device will be replaced.
- If the Linux host machine supports read/write SD card directly without an extra SD card reader device, the device name of SD card is typically mmcblk0.

4. Unplug removable storage device from the Linux host and plug into the reference board.
5. Make sure the DIP switch settings on the board are correct to boot from the desired boot medium.
6. Power-on the board. The system automatically boots up to the LSDK distro.
   - Use the following default credentials to log onto to the LSDK distro:
     — root/root, or
     — user/user

To automatically download and deploy LSDK images directly to the target storage drive on a board:

1. Plug the storage device into the reference board.
2. Check DIP switch settings for the desired boot type.
3. Power-on the board and execute the following command under U-boot prompt to boot the board to TinyDistro. TinyDistro is a non-customizable prebuilt ramdisk rootfs deployed in flash media on the reference board which can be used to execute the flex-installer commands. This rootfs fits into the firmware image on flash and is therefore called tiny.
   - For IFC NOR boot

```
=> run nor_bootcmd
```

   - For SD boot

```
=> run sd_bootcmd
```

4. Login to TinyDistro as “root” and bring up a network interface.

Dynamic IP address assignment:

```
$ udhcpc -i <port name in TinyDistro>
```

Static IP address assignment:

```
$ ifconfig <port name in TinyDistro> <IP address> netmask <netmask address> up
```

The port name in Linux TinyDistro corresponding to each of the ports on the reference board chassis is given in section TWR-LS1021A reference information

5. Download `flex-installer` to deploy LSDK images.

```
$ wget https://www.nxp.com/lgfiles/sdk/lsdk2004-update-290520/flex-installer && chmod +x flex-installer && sudo mv flex-installer /usr/bin
```

6. Execute the following flex-installer command to automatically install LSDK default `rootfs_lsdk2004_LS_arm64_main.tgz` and `bootpartition_LS_arm64_lts_4.19.tgz`.

```
$ flex-installer -i auto -m ls1021atwr -d <device>
```

NOTE

- Use the command `cat /proc/partitions` to see a list of devices and their sizes to make sure that the correct device names have been chosen.
- The SD/USB/SATA storage drive in the Linux PC is detected as /dev/sdX, where X is a letter such as a, b, c. Make sure to choose the correct device name, because data on this device will be replaced.
- If the Linux host machine supports read/write SD card directly without an extra SD card reader device, the device name of SD card is typically mmcblk0.

7. Power-on the board. The system automatically boots up to the LSDK distro.
   - Use the following default credentials to log onto to the LSDK distro:
     - root/root, or
     - user/user

4.1.7 LSDK Quick Start Guide for LS1028ARDB

4.1.7.1 Introduction

The following sections describe the procedure to program LSDK composite firmware for LS1028ARDB, and the most common use case procedure to automatically download and deploy LSDK default images to LS1028ARDB using flex-installer. For other optional/special use case examples, see Download and deploy LSDK images with flex-installer in Linux environment.

For more information on the different components of the board and on how to configure and boot the board, see QorIQ LS1028A Reference Design Board Getting Started Guide.

4.1.7.2 LS1028ARDB reference information

This section provides general information about LS1028ARDB which may come in handy as a reference while completing steps for deploying LSDK images that are mentioned in sections that follow.

Ethernet port map

Port name in chassis	Port name in U-Boot	Port name in Yocto based TinyDistro	Port name in Ubuntu based userland	Description
1G MAC1	enetc-0	eno0	eno0	ENETC PF 0 connected over SGMII on SoC lane A
1G SWP0	swp0	swp0	swp0	Ethernet switch port 0 Switch front panel ports are all connected over QSGMII on SoC lane B
1G SWP1	swp1	swp1	swp1	Ethernet switch port 1
1G SWP2	swp2	swp2	swp2	Ethernet switch port 2
1G SWP3	swp3	swp3	swp3	Ethernet switch port 3

System memory map

Table 13. System memory map

Start address	End address	Size	Allocation	Comment
0x0000_0000_0000	0x0000_000F_FFFF	1 MB	CCSR - Boot ROM	64 KB
0x0000_0010_0000	0x0000_00FF_FFFF	15 MB	Reserved	
0x0000_0100_0000	0x0000_0FFF_FFFF	240 MB	CCSR	
0x0000_1000_0000	0x0000_10FF_FFFF	16 MB	Reserved	
0x0000_1100_0000	0x0000_11FF_FFFF	16 MB	Reserved	
0x0000_1200_0000	0x0000_13FF_FFFF	32 MB	Reserved	
0x0000_1400_0000	0x0000_17FF_FFFF	64 MB	Reserved	
0x0000_1800_0000	0x0000_181F_FFFF	2 MB	OCRAM	128 KB
0x0000_1820_0000	0x0000_182F_FFFF	1 MB	Reserved	
0x0000_1830_0000	0x0000_18FF_FFFF	13 MB	Reserved	
0x0000_1900_0000	0x0000_19FF_FFFF	16 MB	CoreSight STM	16 MB
0x0000_1A00_0000	0x0000_1BFF_FFFF	32 MB	Reserved	
0x0000_1C00_0000	0x0000_1CFF_FFFF	16 MB	Reserved	
0x0000_1D00_0000	0x0000_1FFF_FFFF	48 MB	Reserved	
0x0000_2000_0000	0x0000_2FFF_FFFF	256 MB	FlexSPI Region #1	More FlexSPI space below
0x0000_3000_0000	0x0000_3FFF_FFFF	256 MB	Reserved	
0x0000_4000_0000	0x0000_5FFF_FFFF	512 MB	Reserved	
0x0000_6000_0000	0x0000_7FFF_FFFF	512 MB	Reserved	

Table continues on the next page...

Table 13. System memory map (continued)

Start address	End address	Size	Allocation	Comment
0x0000_8000_0000	0x0000_9FFF_FFFF	512 MB	GPP DRAM Region #1(0-2 GB)	
0x0000_A000_0000	0x0000_BFFF_FFFF	512 MB		
0x0000_C000_0000	0x0000_DFFF_FFFF	512 MB		
0x0000_E000_0000	0x0000_FFFF_FFFF	512 MB		
0x0001_0000_0000	0x0001_EFFF_FFFF	3.75 GB	Reserved	
0x0001_F000_0000	0x0001_F07F_FFFF	8 MB	ECAM config space	Embedded RC+EPECAM (256 MB)
0x0001_F080_0000	0x0001_F09F_FFFF	2 MB	Register block space	
0x0001_F0A0_0000	0x0001_F7FF_FFFF	118 MB	Reserved	
0x0001_F800_0000	0x0001_F83F_FFFF	4 MB	Reserved	
0x0001_F840_0000	0x0001_FBFF_FFFF	60 MB	Reserved	
0x0001_FC00_0000	0x0001_FC3F_FFFF	4 MB	Reserved	
0x0001_FC40_0000	0x0001_FFFF_FFFF	60 MB	Reserved	
0x0002_0000_0000	0x0003_FFFF_FFFF	8 GB	Reserved	
0x0004_0000_0000	0x0004_0FFF_FFFF	256 MB	SPI Hole	
0x0004_1000_0000	0x0004_FFFF_FFFF	3.75 GB	FlexSPI Region #2 (256 MB - 4 GB)	3.75 GB
0x0005_0000_0000	0x0005_FFFF_FFFF	4 GB	Reserved	
0x0006_0000_0000	0x0006_FFFF_FFFF	4 GB	Reserved	
0x0007_0000_0000	0x0007_3FFF_FFFF	1 GB	DCSR	
0x0007_4000_0000	0x0007_FFFF_FFFF	3 GB	Reserved	
0x0008_0000_0000	0x0008_1FFF_FFFF	512 MB	Reserved	
0x0008_2000_0000	0x000B_FFFF_FFFF	15.5 GB	Reserved	
0x000C_0000_0000	0x000F_FFFF_FFFF	16 GB	Reserved	
0x0010_0000_0000	0x001F_FFFF_FFFF	64 GB	Reserved	
0x0020_0000_0000	0x0020_7FFF_FFFF	2 GB	Reserved	
0x0020_8000_0000	0x003F_FFFF_FFFF	126 GB	GPP DRAM Region #2	
0x0040_0000_0000	0x005F_FFFF_FFFF	128 GB	Reserved	
0x0060_0000_0000	0x007F_FFFF_FFFF	128 GB	GPP DRAM Region #3	
0x0080_0000_0000	0x0087_FFFF_FFFF	32 GB	PCI Express 1	High-speed I/O (0x0080_0000_0000 -0x00FF_FFFF_FFFF)

Table continues on the next page...

Table 13. System memory map (continued)

Start address	End address	Size	Allocation	Comment
0x0088_0000_0000	0x008F_FFFF_FFFF	32 GB	PCI Express 2	

Supported boot options

LS1028ARDB supports the following boot options:

- FlexSPI NOR flash (referred to as "FSPI" or "FSPI flash" in the following sections). CS refers to Chip Select.
- eMMC
- SD card (SDHC1)

On-board switch options

The LS1028ARDB board have user selectable switches for evaluating different boot options for the LS1028A device as given in the table below ('0' is OFF, '1' is ON).

Boot source	SW2[1:8]	SW3[1:8]	SW5[1:8]
FSPI NOR (default)	1111_1000	1111_0000	0011_1001
SD Card (SDHC1)	1000_1000	1111_0000	0011_1001
eMMC	1001_1000	1111_0000	0011_1001

In addition to the above switch settings, make sure the following jumper settings are correct.

Table 14. LS1028ARDB jumper settings

Jumper	Type	Name/function	Description
J6	1x2-pin connector	TA_BB_EN enable	Open: TA_BB_TMP_DETECT_B pin is High (default value) Shorted: TA_BB_TMP_DETECT_B pin is Low
J7	1x2-pin connector	VBAT_EN	Open: Disable battery backup for TA_BB_VDD (default value) Shorted: Enable battery backup for TA_BB_VDD
J27	1x2-pin connector	PROG_MTR voltage control (for NXP use only)	Open: PROG_MTR pin is powered off (default value) Shorted: PROG_MTR pin is powered by OVDD (1.8 V)
J28	1x2-pin connector	TA_PROG_SFP voltage control (for NXP use only)	Open: TA_PROG_SFP pin is powered off (default value) Shorted: TA_PROG_SFP pin is powered by OVDD (1.8 V)

FlexSPI NOR Flash Chip-select

FlexSPI NOR flash is a simple and convenient destination for deploying images so it is frequently used.

The benefit of this feature is that it allows more than one set of images to be independently deployed to the one NOR flash. This is very helpful during development because you can use the U-Boot image in one chip-select to program an image set into a different chip-select. If the new images are flawed, the old images are still functional to let you deploy corrected images.

The logic on the board usually allows the NOR flash to be accessed from different CS (chip select) option. Each CS is connected to dedicated flash devices. U-Boot prints which CS is loaded from. The output looks like following.

```
NOTICE:  Fixed DDR on board

NOTICE:  4 GB DDR4, 32-bit, CL=11, ECC on
NOTICE:  BL2: v1.5(release):LSDK-20.04-RC3-3-g4a82c939a
NOTICE:  BL2: Built : 08:59:51, Mar 14 2020
NOTICE:  BL2: Booting BL31
NOTICE:  BL31: v1.5(release):LSDK-20.04-RC3-3-g4a82c939a
NOTICE:  BL31: Built : 09:00:17, Mar 14 2020
NOTICE:  Welcome to LS1028 BL31 Phase


U-Boot 2019.10-g22fdcf06c1 (Mar 14 2020 - 04:35:11 +0800)

SoC:  LS1028AE Rev1.0 (0x870b0010)
Clock Configuration:
       CPU0(A72):1500 MHz  CPU1(A72):1500 MHz
       Bus:      400  MHz  DDR:      1600 MT/s
Reset Configuration Word (RCW):
       00000000: 3c004010 00000030 00000000 00000000
       00000010: 00000000 018f0000 0030c000 00000000
       00000020: 01c031a0 00002580 00000000 00003296
       00000030: 00000000 00000010 00000000 00000000
       00000040: 00000000 00000000 00000000 00000000
       00000050: 00000000 00000000 00000000 00000000
       00000060: 00000000 00000000 200e705a 00000000
       00000070: bb580000 00000000
Model: NXP Layerscape 1028a RDB Board
Board: LS1028AE Rev1.0-RDB, Version: C, boot from NOR
FPGA: v5 (RDB)
SERDES1 Reference : Clock1 = 100.00MHz Clock2 = 100.00MHz
DRAM:  3.9 GiB
DDR    3.9 GiB (DDR4, 32-bit, CL=11, ECC on)
Using SERDES1 Protocol: 47960 (0xbb58)
PCIe0: pcie@3400000 Root Complex: no link
PCIe1: pcie@3500000 Root Complex: no link
WDT:   Started with servicing (60s timeout)
MMC:   FSL_SDHC: 0, FSL_SDHC: 1
Loading Environment from SPI Flash... SF: Detected mt35xu02g with page size 256 Bytes, erase size 128
KiB, total 256 MiB
OK
EEPROM: NXID v1
In:    serial
Out:   serial
Err:   serial
Net:   eth0: enetc-0, eth2: enetc-2, eth4: swp0, eth5: swp1, eth6: swp2, eth7: swp3
Hit any key to stop autoboot:  5     0
=>
```

Boot option switching can be performed in U-Boot using the following statements.

- Switch to FlexSPI NOR flash (default):

```
=>qixis_reset
```

- Switch to SD:

```
=>qixis_reset sd
```

- Switch to eMMC:

```
=>qixis_reset emmc
```

4.1.7.3 Program LSDK composite firmware image

This topic explains steps to program FlexSPI NOR firmware image to FlexSPI NOR flash on LS1028ARDB and SD/eMMC firmware image to SD/eMMC card on LS1028ARDB.

To program LSDK composite firmware image to FlexSPI NOR flash on LS1028ARDB:

1. Download the firmware (from NXP website) to the Linux host machine.

```
$ wget https://www.nxp.com/lgfiles/sdk/lsdk2004/firmware_ls1028ardb_uboot_xspiboot.img
```

2. Reboot the board from FlexSPI NOR flash and stop autoboot to enter U-Boot prompt.
3. Under U-Boot, download the firmware to the reference board using one of the following options:
   - Load firmware from the TFTP server

```
=> tftp $load_addr firmware_ls1028ardb_uboot_xspiboot.img
```

   - Load firmware image from partition on mass storage device (SD, USB, or SATA)

```
=> load mmc <device:partition> $load_addr firmware_ls1028ardb_uboot_xspiboot.img
```

     For example:

```
=> load mmc 0:2 $load_addr firmware_ls1028ardb_uboot_xspiboot.img
```

     Or

```
=> load usb <device:partition> $load_addr firmware_ls1028ardb_uboot_xspiboot.img
```

     Or

```
=> load scsi <device:partition> $load_addr firmware_ls1028ardb_uboot_xspiboot.img
```

NOTE

Use the following command if the SD card is formatted/created using LSDK flex-installer command:

```
=> load <interface> [<dev[:part]> [<addr> [<filename> [bytes [pos]]]]]
```

For example:

```
=> load mmc 0:2 $load_addr firmware_ls1028ardb_uboot_xspiboot.img
```

Use the following command if the SD card is formatted/created on a Windows PC:

```
=> fatload <interface> [<dev[:part]> [<addr> [<filename> [bytes [pos]]]]]
```

For example:

```
=> fatload mmc 0:2 $load_addr firmware_ls1028ardb_uboot_xspiboot.img
```

Use the following command if the SD card is formatted/created on a Linux PC:

```
=> ext2load <interface> [<dev[:part]> [<addr> [<filename> [bytes [pos]]]]]
```

For example:

```
=> ext2load mmc 0:2 $load_addr firmware_ls1028ardb_uboot_xspiboot.img
```

Also note that LSDK flex-installer command puts the images on the IInd partition, so `0:2` is used in the `load` command. If the SD card is formatted on Windows PC or Linux PC for single partition only, then `0` should be used instead of `0:2` in the `fatload`/`ext2load` command.

4. Program the firmware to FlexSPI NOR flash.

```
=> sf probe 0:0
=> sf erase 0 +$filesize && sf write $load_addr 0 $filesize
```

5. Reset and boot the board from FlexSPI NOR flash. The system will automatically boot up TinyDistro (login using root/root) or LSDK distro (login using root/root or user/user) available on the removable storage device.

```
=> qixis_reset
```

To program LSDK composite firmware image to SD/eMMC on LS1028ARDB:

1. Download the firmware (from NXP website) to the Linux host machine.
   - For SD boot:

     ```
     wget https://www.nxp.com/lgfiles/sdk/lsdk2004/firmware_ls1028ardb_uboot_sdboot.img
     ```

   - For eMMC boot:

     ```
     wget https://www.nxp.com/lgfiles/sdk/lsdk2004/firmware_ls1028ardb_uboot_emmcboot.img
     ```

2. Reboot the board from FlexSPI NOR flash and stop autoboot to enter U-Boot prompt.
3. Under U-Boot, download the firmware to the reference board using one of the following options:
   - Load firmware from the TFTP server

For SD boot:

```
=> tftp $load_addr firmware_ls1028ardb_uboot_sdboot.img
```

For eMMC boot:

```
=> tftp $load_addr firmware_ls1028ardb_uboot_emmcboot.img
```

- Load firmware image from partition on mass storage device (SD, USB, or SATA)

  For SD boot:

  ```
  => load mmc <device:partition> $load_addr firmware_ls1028ardb_uboot_sdboot.img
  ```

  For example:

  ```
  => load mmc 0:2 $load_addr firmware_ls1028ardb_uboot_sdboot.img
  ```

  Or

  ```
  => load usb <device:partition> $load_addr firmware_ls1028ardb_uboot_sdboot.img
  ```

  Or

  ```
  => load scsi <device:partition> $load_addr firmware_ls1028ardb_uboot_sdboot.img
  ```

  For eMMC boot:

  ```
  => load mmc <device:partition> $load_addr firmware_ls1028ardb_uboot_emmcboot.img
  ```

  For example:

  ```
  => load mmc 0:2 $load_addr firmware_ls1028ardb_uboot_emmcboot.img
  ```

  Or

  ```
  => load usb <device:partition> $load_addr firmware_ls1028ardb_uboot_emmcboot.img
  ```

  Or

  ```
  => load scsi <device:partition> $load_addr firmware_ls1028ardb_uboot_emmcboot.img
  ```

NOTE

Use the following command if the SD card is formatted/created using LSDK flex-installer command:

```
=> load <interface> [<dev[:part]> [<addr> [<filename> [bytes [pos]]]]]
```

For example:

```
=> load mmc 0:2 $load_addr firmware_ls1028ardb_uboot_emmcboot.img
```

Use the following command if the SD card is formatted/created on a Windows PC:

```
=> fatload <interface> [<dev[:part]> [<addr> [<filename> [bytes [pos]]]]]
```

For example:

```
=> fatload mmc 0:2 $load_addr firmware_ls1028ardb_uboot_emmcboot.img
```

Use the following command if the SD card is formatted/created on a Linux PC:

```
=> ext2load <interface> [<dev[:part]> [<addr> [<filename> [bytes [pos]]]]]
```

For example:

```
=> ext2load mmc 0:2 $load_addr firmware_ls1028ardb_uboot_emmcboot.img
```

Also note that LSDK flex-installer command puts the images on the IInd partition, so `0:2` is used in the `load` command. If the SD card is formatted on Windows PC or Linux PC for single partition only, then `0` should be used instead of `0:2` in the `fatload`/`ext2load` command.

4. Program the firmware to SD card.

```
=> mmc dev 0;mmc write $load_addr 8 1fff8
```

5. Program the firmware to eMMC card.

```
=> mmc dev 1;mmc write $load_addr 8 1fff8
```

6. Reset and boot the board from SD/eMMC card. The system will automatically boot up TinyDistro (login using root/root) or LSDK distro (login using root/root or user/user) available on the removable storage device.
   - For SD boot:

     ```
     => qixis_reset sd
     ```

   - For eMMC boot:

     ```
     => qixis_reset emmc
     ```

4.1.7.4 Automatically download and deploy LSDK images

To automatically download and deploy LSDK images to a board using a removable storage device which can be connected to a local Linux host machine:

1. Connect the removable storage device to the Linux host machine.

2. Download `flex-installer` to deploy LSDK images.

```
$ wget https://www.nxp.com/lgfiles/sdk/lsdk2004-update-290520/flex-installer && chmod +x flex-installer && sudo mv flex-installer /usr/bin
```

3. Execute the following flex-installer command to automatically install LSDK default `rootfs_lsdk2004_LS_arm64_main.tgz` and `bootpartition_LS_arm64_lts_4.19.tgz`.

```
$ flex-installer -i auto -m ls1028ardb -d <device>
```

NOTE

- Use the command `cat /proc/partitions` to see a list of devices and their sizes to make sure that the correct device names have been chosen.
- The SD/USB/SATA storage drive in the Linux PC is detected as /dev/sdX, where X is a letter such as a, b, c. Make sure to choose the correct device name, because data on this device will be replaced.
- If the Linux host machine supports read/write SD card directly without an extra SD card reader device, the device name of SD card is typically mmcblk0.

4. Unplug removable storage device from the Linux host and plug into the reference board.
5. Make sure the DIP switch settings on the board are correct to boot from the desired boot medium.
6. Power-on the board. The system automatically boots up to the LSDK distro.
   - Use the following default credentials to log onto to the LSDK distro:
     — root/root, or
     — user/user

To automatically download and deploy LSDK images directly to the target storage drive on a board:

1. Plug the storage device into the reference board.
2. Check DIP switch settings for the desired boot type.
3. Power-on the board and execute the following command under U-boot prompt to boot the board to TinyDistro. TinyDistro is a non-customizable prebuilt ramdisk rootfs deployed in flash media on the reference board which can be used to execute the flex-installer commands. This rootfs fits into the firmware image on flash and is therefore called tiny.
   - For FlexSPI NOR boot:

```
=> run xspi_bootcmd
```

   - For SD/eMMC boot:

```
=> run sd_bootcmd
```

4. Login to TinyDistro as “root” and bring up a network interface.

   Dynamic IP address assignment:

```
$ udhcpc -i <port name in TinyDistro>
```

   Static IP address assignment:

```
$ ifconfig <port name in TinyDistro> <IP address> netmask <netmask address> up
```

   The port name in Linux TinyDistro corresponding to each of the ports on the reference board chassis is given in section LS1028ARDB reference information

5. Download `flex-installer` to deploy LSDK images.

```
$ wget https://www.nxp.com/lgfiles/sdk/lsdk2004-update-290520/flex-installer && chmod +x flex-installer && sudo mv flex-installer /usr/bin
```

6. Execute the following flex-installer command to automatically install LSDK default `rootfs_lsdk2004_LS_arm64_main.tgz` and `bootpartition_LS_arm64_lts_4.19.tgz`.

```
$ flex-installer -i auto -m ls1028ardb -d <device>
```

NOTE

- Use the command `cat /proc/partitions` to see a list of devices and their sizes to make sure that the correct device names have been chosen.
- The SD/USB/SATA storage drive in the Linux PC is detected as /dev/sdX, where X is a letter such as a, b, c. Make sure to choose the correct device name, because data on this device will be replaced.
- If the Linux host machine supports read/write SD card directly without an extra SD card reader device, the device name of SD card is typically mmcblk0.

7. Power-on the board. The system automatically boots up to the LSDK distro.
   - Use the following default credentials to log onto to the LSDK distro:
     - root/root, or
     - user/user

4.1.8 LSDK Quick Start Guide for LS1043ARDB

4.1.8.1 Introduction

The following sections describe the procedure to program LSDK composite firmware for LS1043ARDB, and the most common use case procedure to automatically download and deploy LSDK default images to LS1043ARDB using flex-installer. For other optional/special use case examples, see Download and deploy LSDK images with flex-installer in Linux environment.

For more information on the different components of the board and on how to configure and boot the board, see QorIQ LS1043A Reference Design Board Getting Started Guide.

For a list of brief how-tos to help you modify/update individual LSDK components such as, TF-A binaries, Linux kernel, DPAA1 FMAN ucode on LS1043ARDB when booting the board from a specific boot source, such as NOR, NAND, or SD, see NXP community.

4.1.8.2 LS1043ARDB reference information

This section provides general information about LS1043ARDB which may come in handy as a reference while completing steps for deploying LSDK that follow.

Port map

The port name in Linux TinyDistro corresponding to each of the six ports on the reference board chassis is given in the table below.

Port name on chassis	Port name in U-Boot	Port name in TinyDistro	Port name in Linux
QSGMII.P0	FM1@DTSEC1	eth0	fm1-mac1
QSGMII.P1	FM1@DTSEC2	eth1	fm1-mac2

Table continues on the next page...

Table continued from the previous page...

Port name on chassis	Port name in U-Boot	Port name in TinyDistro	Port name in Linux
QSGMII.P2	FM1@DTSEC3	eth2	fm1-mac5
QSGMII.P3	FM1@DTSEC4	eth3	fm1-mac6
RGMII1	FM1@DTSEC5	eth4	fm1-mac3
RGMII2	FM1@DTSEC6	eth5	fm1-mac4
10G Copper	FM1@TGEC1	eth6	fm1-mac9

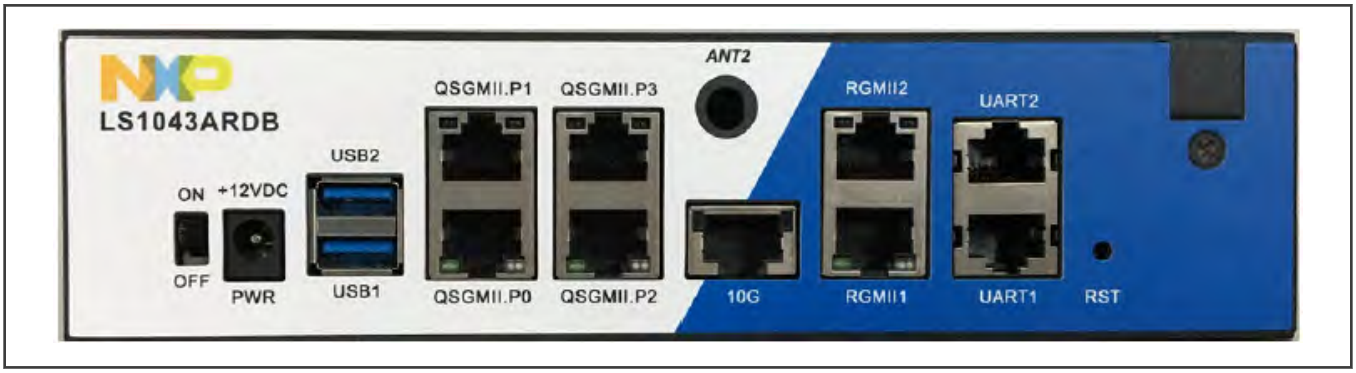

System memory map

Start Physical Address	End Physical Address	Memory Type	Size
0x00_0000_0000	0x00_000F_FFFF	Secure Boot ROM	1MB
0x00_0100_0000	0x00_0FFF_FFFF	CCSRBAR	240MB
0x00_1000_0000	0x00_1000_FFFF	OCRAM0	64KB
0x00_1001_0000	0x00_1001_FFFF	OCRAM1	64KB
0x00_2000_0000	0x00_20FF_FFFF	DCSR	16MB
0x00_6000_0000	0x00_67FF_FFFF	IFC - NOR Flash	128MB
0x00_7E80_0000	0x00_7E80_FFFF	IFC - NAND Flash	64KB
0x00_7FB0_0000	0x00_7FB0_0FFF	IFC - FPGA	4KB
0x00_8000_0000	0x00_FFFF_FFFF	DRAM1	2GB

Supported boot options

LS1043ARDB supports the following boot options:

- NOR
- NAND
- SD

On-board switch options

The RDB has user selectable switches for evaluating different boot options for the LS1043A device as given in the table below ('0' is OFF, '1' is ON).

Boot source	SW3[1:8]	SW4[1:8]	SW5[1:8]
NOR bank 0 (default)	10110011	00010010	10100010
NOR bank 4	10110011	00010010	10100110
SD card	10110011	00100000	00100010
NAND	10110011	10000010	10100110

NOR Flash (Virtual) Banks

LS1043ARDB provides a special feature that allows a single NOR flash to be divided into multiple parts called “banks”. This is done by board-level logic that modifies address signals. As there is only one NOR flash physically, the banks are sometimes called "virtual" banks. The benefit of this feature is that it allows more than one set of images to be independently deployed to one NOR flash. This is very helpful during development because the U-Boot image in one bank can be used to program an image set into a different bank. If the new images are flawed, the old images are still functional. The logic on the board usually allows the NOR flash to be divided into up to 8 banks, but the NOR flash on LS1043ARDB is divided into two halves. The halves are called bank 0 and bank 4. Bank switching can be done in in software using cpld commands. To determine the current bank, refer to the example U-Boot log given below:

```
U-Boot 2018.09-g6c99ca4519 (Dec 04 2018 - 03:49:55 +0800)

SoC:  LS1043AE Rev1.1 (0x87920011)
Clock Configuration:
       CPU0(A53):1600 MHz  CPU1(A53):1600 MHz  CPU2(A53):1600 MHz
       CPU3(A53):1600 MHz
       Bus:      400  MHz  DDR:      1600 MT/s  FMAN:     500  MHz
Reset Configuration Word (RCW):
       00000000: 08100010 0a000000 00000000 00000000
       00000010: 14550002 80004012 e0025000 c1002000
       00000020: 00000000 00000000 00000000 00038800
       00000030: 00000000 00001101 00000096 00000001
Model: LS1043A RDB Board
Board: LS1043ARDB, boot from vBank 4
CPLD:  V2.0
PCBA:  V4.0
SERDES Reference Clocks:
SD1_CLK1 = 156.25MHZ, SD1_CLK2 = 100.00MHZ
I2C:   ready
DRAM:  1.9 GiB (DDR4, 32-bit, CL=11, ECC off)
Using SERDES1 Protocol: 5205 (0x1455)
SEC0: RNG instantiated
Not a microcode
Flash: 128 MiB
NAND:  512 MiB
MMC:   FSL_SDHC: 0
Loading Environment from Flash... OK
EEPROM: NXID v1
In:    serial
Out:   serial
Err:   serial
SCSI:  PCIe0: pcie@3400000 disabled
PCIe1: pcie@3500000 Root Complex: no link
```

```
PCIe2: pcie@3600000 Root Complex: x1 gen1
Error: SCSI Controller(s) 1B4B:9170 not found

Net:   Fman1: Uploading microcode version 106.4.18
FM1@TGEC1: system interface XFI
FM1@TGEC1: Aquantia AQR105 Firmware Version 2.b.e
e1000: 00:15:17:80:ad:54
       FM1@DTSEC1, FM1@DTSEC2, FM1@DTSEC3, FM1@DTSEC4, FM1@DTSEC5, FM1@DTSEC6, FM1@TGEC1, e1000#0
[PRIME]
Warning: e1000#0 MAC addresses don't match:
Address in SROM is         00:15:17:80:ad:54
Address in environment is  00:e0:0c:00:88:07

Warning: e1000#0 failed to set MAC address

=>
```

Boot option switching

Boot switching can be performed in U-Boot using the following commands:

- Switch to NOR bank 0 (default):

```
=>cpld reset
```

- Switch to NOR bank 4:

```
=>cpld reset altbank
```

- Switch to NAND :

```
=>cpld reset nand
```

- Switch to SD:

```
=>cpld reset sd
```

4.1.8.3 LS1043ARDB recovery information

If LS1043ARDB board fails to boot from NOR bank 0, you can recover NOR bank 0 from NOR bank 4 by following these steps:

1. Download the prebuilt image using the following options:

```
$ wget http://www.nxp.com/lgfiles/sdk/lsdk2004/firmware_ls1043ardb_uboot_norboot.img
```

2. Boot LS1043ARDB from NOR bank 4 with the following switch settings:

   `SW3 = 10110011, SW4 = 00010010, SW5 = 10100110`

3. Program NOR bank 0 from NOR bank 4:

```
=> tftp $load_addr firmware_ls1043ardb_uboot_norboot.img
=> protect off 64000000 +$filesize && erase 64000000 +$filesize && cp.b $load_addr 64000000
$filesize
```

4. Reset and boot the board from NOR bank 0:

```
=> cpld reset
```

NOTE

If LS1043ARDB fails to boot from both the NOR banks, you need to recover the board using **CodeWarrior Development Studio for QorIQ LS series - ARM V8 ISA**. For steps to recover the board using the CodeWarrior tool, see section "*8.6 Board Recovery*" in ARM V8 ISA, Targeting Manual

4.1.8.4 Program LSDK composite firmware image

This topic explains steps to program NOR firmware image to IFC NOR flash on LS1043ARDB and SD firmware image to SD card on LS1043ARDB.

To program LSDK composite NOR firmware image to IFC NOR flash on LS1043ARDB:

1. Download the NOR firmware (from NXP website) to the Linux host machine.

```
$ wget https://www.nxp.com/lgfiles/sdk/lsdk2004/firmware_ls1043ardb_uboot_norboot.img
```

2. Reboot the board from NOR flash bank 0 and stop autoboot to enter U-Boot prompt.
3. Under U-Boot, download the firmware to the reference board using one of the following options:
   - Load firmware from the TFTP server

```
=> tftp $load_addr firmware_ls1043ardb_uboot_norboot.img
```

   - Load firmware image from partition on mass storage device (SD, USB, or SATA)

```
=> load mmc <device:partition> $load_addr firmware_ls1043ardb_uboot_norboot.img
```

     For example:

```
=> load mmc 0:2 $load_addr firmware_ls1043ardb_uboot_norboot.img
```

     Or

```
=> load usb <device:partition> $load_addr firmware_ls1043ardb_uboot_norboot.img
```

     Or

```
=> load scsi <device:partition> $load_addr firmware_ls1043ardb_uboot_norboot.img
```

NOTE

Use the following command if the SD card is formatted/created using LSDK flex-installer command:

```
=> load <interface> [<dev[:part]> [<addr> [<filename> [bytes [pos]]]]]
```

For example:

```
=> load mmc 0:2 $load_addr firmware_ls1043ardb_uboot_norboot.img
```

Use the following command if the SD card is formatted/created on a Windows PC:

```
=> fatload <interface> [<dev[:part]> [<addr> [<filename> [bytes [pos]]]]]
```

For example:

```
=> fatload mmc 0:2 $load_addr firmware_ls1043ardb_uboot_norboot.img
```

Use the following command if the SD card is formatted/created on a Linux PC:

```
=> ext2load <interface> [<dev[:part]> [<addr> [<filename> [bytes [pos]]]]]
```

For example:

```
=> ext2load mmc 0:2 $load_addr firmware_ls1043ardb_uboot_norboot.img
```

Also note that LSDK flex-installer command puts the images on the IInd partition, so `0:2` is used in the `load` command. If the SD card is formatted on Windows PC or Linux PC for single partition only, then `0` should be used instead of `0:2` in the `fatload`/`ext2load` command.

4. Program the composite firmware into IFC NOR flash.
   - To program alternate bank:

     ```
     => protect off 64000000 +$filesize && erase 64000000 +$filesize && cp.b $load_addr 64000000
     $filesize
     ```

   - To program current bank:

     ```
     => protect off 60000000 +$filesize && erase 60000000 +$filesize && cp.b $load_addr 60000000
     $filesize
     ```

5. Reset and boot the board from IFC NOR flash. The system will automatically boot up TinyDistro (login using root/root) or LSDK distro (login using root/root or user/user) available on the removable storage device.
   - To boot from NOR flash bank 0.

     ```
     => cpld reset
     ```

   - To boot from NOR flash bank 4.

     ```
     => cpld reset altbank
     ```

To program LSDK composite SD firmware image to SD card on LS1043ARDB:

1. Download the SD firmware (from NXP website) to the Linux host machine.

   ```
   $ wget https://www.nxp.com/lgfiles/sdk/lsdk2004/firmware_ls1043ardb_uboot_sdboot.img
   ```

2. Reboot the board from NOR flash bank 0 and stop autoboot to enter U-Boot prompt.

3. Under U-Boot, download the firmware to the reference board using one of the following options:
   - Load firmware from the TFTP server

     ```
     => tftp $load_addr firmware_ls1043ardb_uboot_sdboot.img
     ```

   - Load firmware image from partition on mass storage device (SD, USB, or SATA)

     ```
     => load mmc <device:partition> $load_addr firmware_ls1043ardb_uboot_sdboot.img
     ```

     For example:

     ```
     => load mmc 0:2 $load_addr firmware_ls1043ardb_uboot_sdboot.img
     ```

     Or

     ```
     => load usb <device:partition> $load_addr firmware_ls1043ardb_uboot_sdboot.img
     ```

     Or

     ```
     => load scsi <device:partition> $load_addr firmware_ls1043ardb_uboot_sdboot.img
     ```

     NOTE

     Use the following command if the SD card is formatted/created using LSDK flex-installer command:

     ```
     => load <interface> [<dev[:part]> [<addr> [<filename> [bytes [pos]]]]]
     ```

     For example:

     ```
     => load mmc 0:2 $load_addr firmware_ls1043ardb_uboot_sdboot.img
     ```

     Use the following command if the SD card is formatted/created on a Windows PC:

     ```
     => fatload <interface> [<dev[:part]> [<addr> [<filename> [bytes [pos]]]]]
     ```

     For example:

     ```
     => fatload mmc 0:2 $load_addr firmware_ls1043ardb_uboot_sdboot.img
     ```

     Use the following command if the SD card is formatted/created on a Linux PC:

     ```
     => ext2load <interface> [<dev[:part]> [<addr> [<filename> [bytes [pos]]]]]
     ```

     For example:

     ```
     => ext2load mmc 0:2 $load_addr firmware_ls1043ardb_uboot_sdboot.img
     ```

     Also note that LSDK flex-installer command puts the images on the IInd partition, so `0:2` is used in the `load` command. If the SD card is formatted on Windows PC or Linux PC for single partition only, then `0` should be used instead of `0:2` in the `fatload`/`ext2load` command.

4. Write the firmware to SD card.

   ```
   => mmc dev 0; mmc write $load_addr 8 1f000
   ```

5. Reset and boot the board from SD card. The system will automatically boot up TinyDistro (login using root/root) or LSDK distro (login using root/root or user/user) available on the removable storage device.

```
=> cpld reset sd
```

4.1.8.5 Automatically download and deploy LSDK images

To automatically download and deploy LSDK images to a board using a removable storage device which can be connected to a local Linux host machine:

1. Connect the removable storage device to the Linux host machine.
2. Download `flex-installer` to deploy LSDK images.

```
$ wget https://www.nxp.com/lgfiles/sdk/lsdk2004-update-290520/flex-installer && chmod +x flex-installer && sudo mv flex-installer /usr/bin
```

3. Execute the following flex-installer command to automatically install LSDK default `rootfs_lsdk2004_LS_arm64_main.tgz` and `bootpartition_LS_arm64_lts_4.19.tgz`.

```
$ flex-installer -i auto -m ls1043ardb -d <device>
```

NOTE

- Use the command `cat /proc/partitions` to see a list of devices and their sizes to make sure that the correct device names have been chosen.
- The SD/USB/SATA storage drive in the Linux PC is detected as /dev/sdX, where X is a letter such as a, b, c. Make sure to choose the correct device name, because data on this device will be replaced.
- If the Linux host machine supports read/write SD card directly without an extra SD card reader device, the device name of SD card is typically mmcblk0.

4. Unplug removable storage device from the Linux host and plug into the reference board.
5. Make sure the DIP switch settings on the board are correct to boot from the desired boot medium.
6. Power-on the board. The system automatically boots up to the LSDK distro.
   - Use the following default credentials to log onto to the LSDK distro:
     - root/root, or
     - user/user

To automatically download and deploy LSDK images directly to the target storage drive on a board:

1. Plug the storage device into the reference board.
2. Check DIP switch settings for the desired boot type.
3. Power-on the board and execute the following command under U-boot prompt to boot the board to TinyDistro. TinyDistro is a non-customizable prebuilt ramdisk rootfs deployed in flash media on the reference board which can be used to execute the flex-installer commands. This rootfs fits into the firmware image on flash and is therefore called tiny.
   - For IFC NOR boot:

```
=> run nor_bootcmd
```

   - For SD boot:

```
=> run sd_bootcmd
```

4. Login to TinyDistro as “root” and bring up a network interface.

   Dynamic IP address assignment:

   ```
   $ udhcpc -i <port name in TinyDistro>
   ```

   Static IP address assignment:

   ```
   $ ifconfig <port name in TinyDistro> <IP address> netmask <netmask address> up
   ```

   The port name in Linux TinyDistro corresponding to each of the ports on the reference board chassis is given in section LS1043ARDB reference information

5. Download `flex-installer` to deploy LSDK images.

   ```
   $ wget https://www.nxp.com/lgfiles/sdk/lsdk2004-update-290520/flex-installer && chmod +x flex-installer && sudo mv flex-installer /usr/bin
   ```

6. Execute the following flex-installer command to automatically install LSDK default `rootfs_lsdk2004_LS_arm64_main.tgz` and `bootpartition_LS_arm64_lts_4.19.tgz`.

   ```
   $ flex-installer -i auto -m ls1043ardb -d <device>
   ```

   NOTE

   - Use the command `cat /proc/partitions` to see a list of devices and their sizes to make sure that the correct device names have been chosen.
   - The SD/USB/SATA storage drive in the Linux PC is detected as /dev/sdX, where X is a letter such as a, b, c. Make sure to choose the correct device name, because data on this device will be replaced.
   - If the Linux host machine supports read/write SD card directly without an extra SD card reader device, the device name of SD card is typically mmcblk0.

7. Power-on the board. The system automatically boots up to the LSDK distro.
   - Use the following default credentials to log onto to the LSDK distro:
     - root/root, or
     - user/user

4.1.8.6 Frame Manager Configuration (FMC) tool

By default, FMan has been configured for Parse-Classify-Distribute (PCD). This means that without any further action from the user, Fman enqueues received frames from a particular flow to the same receive queue. This prevents Rx packet reorder issues and improves performance.

This default FMan configuration uses configuration and policy files that are provided in NXP’s Linux LSDK to perform PCD. These files are in xml format and are created with the objective of preserving packet ordering per flow. For LS1043ARDB, these files are available at the following path :

```
/etc/fmc/config/private/ls1043ardb/RR_FQPP_1455
```

However, if a user wants to apply a configuration other than the one which is applied by default, the user needs to run following command after the board boots to Linux.

1. Change directory to the parent directory of the user’s custom configuration and policy files
2. Run the FMC tool command:

   ```
   $ fmc -c <config.xml> -p <policy.xml> -a
   ```

4.1.9 LSDK Quick Start Guide for FRWY-LS1046A

4.1.9.1 Introduction

The following sections describe the procedure to program LSDK composite firmware for FRWY-LS1046A, and the most common use case procedure to automatically download and deploy LSDK default images to FRWY-LS1046A using flex-installer. For other optional/special use case examples, see Download and deploy LSDK images with flex-installer in Linux environment.

For more information on the different components of the board and on how to configure and boot the board, see Layerscape FRWY-LS1046A Board Getting Started Guide.

4.1.9.2 FRWY-LS1046A reference information

This section provides general information about FRWY-LS1046A. The information may come in handy as a reference while performing steps for deploying LSDK images that are mentioned in sections that follow.

Ethernet port map

Port name in chassis	Port name in U-Boot	Port name in TinyDistro	Port name in Linux	Description
1G PORT1	FM1@DTSEC1	fm1-mac1	eth1	QSGMII copper interface
1G PORT2	FM1@DTSEC5	fm1-mac5	eth2	QSGMII copper interface
1G PORT3	FM1@DTSEC6	fm1-mac6	eth3	QSGMII copper interface
1G PORT4	FM1@DTSEC10	fm1-mac10	eth4	QSGMII copper interface

System memory map

Table 15. System memory map

Start address (Hex)	Module name	Size	Accessible with x-bit addressing		
			32	36	40
00_0000_0000	Secure Boot ROM	1 MB	Y	Y	Y
00_0010_0000	Extended Boot ROM	15 MB	Y	Y	Y
00_0100_0000	CCSR Register Space	240 MB	Y	Y	Y
00_1000_0000	OCRAM1	64 KB	Y	Y	Y
00_1001_0000	OCRAM2	64 KB	Y	Y	Y
00_1004_0000	Reserved	65408 KB	Y	Y	Y
00_1100_0000	Reserved	16 MB	Y	Y	Y
00_1200_0000	STM	16 MB	Y	Y	Y

Table continues on the next page...

Table 15. System memory map (continued)

Start address (Hex)	Module name	Size	Accessible with x-bit addressing		
			32	36	40
00_1300_0000	Reserved	208 MB	Y	Y	Y
00_2000_0000	DCSR	64 MB	Y	Y	Y
00_2400_0000	Reserved	448 MB	Y	Y	Y
00_4000_0000	QuadSPI	512 MB	Y	Y	Y
00_6000_0000	IFC region 1(0 - 512 MB)	512 MB	Y	Y	Y
00_8000_0000	DRAM1 (0 - 2 GB)	2 GB	Y	Y	Y
01_0000_0000	Reserved	0.0625 GB	N	Y	Y
01_0400_0000	Reserved	3.9375 GB	N	Y	Y
02_0000_0000	Reserved	1 GB	N	Y	Y
02_4000_0000	Reserved	7 GB	N	Y	Y
04_0000_0000	Reserved	0.25 GB	N	Y	Y
04_1000_0000	Reserved	0.25 GB	N	Y	Y
04_2000_0000	Reserved	0.25 GB	N	Y	Y
04_3000_0000	Reserved	1.25 GB	N	Y	Y
04_8000_0000	Reserved	2 GB	N	Y	Y
05_0000_0000	QMAN S/W Portal	128 MB	N	Y	Y
05_0800_0000	BMAN S/W Portal	128 MB	N	Y	Y
05_1000_0000	Reserved	4 GB - 256 MB	N	Y	Y
06_0000_0000	Reserved	0.5 GB	N	Y	Y
06_2000_0000	IFC region 2 (512 MB - 4 GB)	3.5 GB	N	Y	Y
07_0000_0000	Reserved	4 GB	N	Y	Y
08_0000_0000	Reserved	2 GB	N	Y	Y
08_8000_0000	DRAM2	30 GB	N	Y	Y
10_0000_0000	Reserved	64 GB	N	Y	Y
20_0000_0000	Reserved	128 GB	N	N	Y
40_0000_0000	PCI Express 1	32 GB	N	N	Y
48_0000_0000	PCI Express 2	32 GB	N	N	Y
50_0000_0000	PCI Express 3	32 GB	N	N	Y
58_0000_0000	Reserved	160 GB	N	N	Y

Table continues on the next page...

Table 15. System memory map (continued)

Start address (Hex)	Module name	Size	Accessible with x-bit addressing		
			32	36	40
80_0000_0000	Reserved	32 GB	N	N	Y
88_0000_0000	DRAM3 (32 - 512 GB)	480 GB	N	N	Y

Supported boot options

The FRWY-LS1046A board supports the following boot options:

- QSPI NOR flash (referred to as "QSPI" or "QSPI flash" in the following sections). CS refers to chip select.
- Micro-SD card (SDHC1)

Onboard switch options

The FRWY-LS1046A board has user selectable switches for evaluating different boot options for the LS1046A device as given in the table below ('0' is OFF, '1' is ON).

Boot source	SW1[1:10]
QSPI NOR (default)	0_0100_0100_0
Micro-SD card (SDHC1)	0_0100_0000_0

NOTE

User can only switch between QSPI NOR to Micro-SD and vice versa using switch settings, there is no command to switch between them.

In addition to the above switch settings, ensure that the following jumper settings are correct.

Table 16. FRWY-LS1046A jumper settings

Part identifier	Jumper type	Description	Jumper settings
J72	1x2 connector	UART selection header	• Open: UART1 port is accessed remotely through a 1x4 header (J73) • Shorted: A USB 2.0 micro AB connector (J58) is connected to UART1 port through a USB-to-UART bridge (default setting)
J8	1x2 connector	VDD voltage selection header	• Open: VDD = 0.9 V • Shorted: VDD = 1 V (default setting)
J14	1x2 connector	Reset mode selection header	• Open: RESET_REQ_B pin of the processor is disconnected • Shorted: RESET_REQ_B pin triggers system reset when asserted (default setting)

Table continues on the next page...

Table 16. FRWY-LS1046A jumper settings (continued)

Part identifier	Jumper type	Description	Jumper settings
J11	1x2 connector	PROG_MTR voltage control header (NXP use only)	• Open: PROG_MTR pin of the processor is powered off (default setting) • Shorted: PROG_MTR pin is powered by OVDD (1.8 V)
J9	1x2 connector	TA_BB_VDD voltage control header	• Open: TA_BB_VDD pin of the processor is powered off • Shorted: TA_BB_VDD pin is powered by VDD (1/0.9 V) (default setting)

QSPI NOR flash

QSPI NOR flash is a simple and convenient destination for deploying images; therefore, it is most common medium for deploying images. When the board boots from QSPI, the U-Boot log looks as follows:

```
NOTICE:  Fixed DDR on board

NOTICE:  4 GB DDR4, 64-bit, CL=15, ECC on
NOTICE:  BL2: v1.5(release):LX2160_UEFI_ACPI_EAR1-1-gbf83b558
NOTICE:  BL2: Built : 12:46:37, Dec 17 2019
NOTICE:  BL31: v1.5(release):LX2160_UEFI_ACPI_EAR1-1-gbf83b558
NOTICE:  BL31: Built : 12:46:42, Dec 17 2019
NOTICE:  Welcome to LS1046 BL31 Phase


U-Boot 2019.10-00007-g0a7a4b0b3f (Dec 17 2019 - 12:45:40 +0800)

SoC:  LS1046AE Rev1.0 (0x87070010)
Clock Configuration:
       CPU0(A72):1600 MHz  CPU1(A72):1600 MHz  CPU2(A72):1600 MHz
       CPU3(A72):1600 MHz
       Bus:      600  MHz  DDR:      2100 MT/s  FMAN:     700  MHz
Reset Configuration Word (RCW):
       00000000: 0c150010 0e000000 00000000 00000000
       00000010: 30400506 00800012 40025000 c1000000
       00000020: 00000000 00000000 00000000 00038800
       00000030: 20044100 24003101 00000096 00000001
Model: LS1046A FRWY Board
Board: LS1046AFRWY, Rev: A, boot from QSPI
SD1_CLK1 = 100.00MHZ, SD1_CLK2 = 100.00MHZ
I2C:   ready
DRAM:  3.9 GiB (DDR4, 64-bit, CL=15, ECC on)
SEC0: RNG instantiated
Using SERDES1 Protocol: 12352 (0x3040)
Using SERDES2 Protocol: 1286 (0x506)
NAND:  512 MiB
MMC:   FSL_SDHC: 0
Loading Environment from SPI Flash... SF: Detected mt25qu512a with page size 256 Bytes, erase size 64
KiB, total 64 MiB
OK
EEPROM: NXID v1
In:    serial
```

```
Out:   serial
Err:   serial
Net:   SF: Detected mt25qu512a with page size 256 Bytes, erase size 64 KiB, total 64 MiB
Fman1: Uploading microcode version 106.4.18
PCIe0: pcie@3400000 disabled
PCIe1: pcie@3500000 Root Complex: no link
PCIe2: pcie@3600000 Root Complex: no link
FM1@DTSEC1, FM1@DTSEC5, FM1@DTSEC6, FM1@DTSEC9, FM1@DTSEC10
Error: FM1@DTSEC10 address not set.

Hit any key to stop autoboot:  0
```

4.1.9.3 Program LSDK composite firmware image

This topic explains steps to program QSPI NOR firmware image to QSPI NOR flash on FRWY-LS1046A and SD firmware image to SD card on FRWY-LS1046A.

To program LSDK composite firmware image to QSPI NOR flash on FRWY-LS1046A:

1. Download the firmware (from NXP website) to the Linux host machine.

   ```
   $ wget https://www.nxp.com/lgfiles/sdk/lsdk2004/firmware_ls1046afrwy_uboot_qspiboot.img
   ```

2. Reboot the board from QSPI NOR flash and stop autoboot to enter U-Boot prompt.
3. Under U-Boot, download the firmware to the reference board using one of the following options:
   - Load firmware from the TFTP server

     ```
     => tftp $load_addr firmware_ls1046afrwy_uboot_qspiboot.img
     ```

   - Load firmware image from partition on mass storage device (SD or USB)

     ```
     => load mmc <device:partition> $load_addr firmware_ls1046afrwy_uboot_qspiboot.img
     ```

     For example:

     ```
     => load mmc 0:2 $load_addr firmware_ls1046afrwy_uboot_qspiboot.img
     ```

     Or

     ```
     => load usb <device:partition> $load_addr firmware_ls1046afrwy_uboot_qspiboot.img
     ```

NOTE

Use the following command if the SD card is formatted/created using LSDK flex-installer command:

```
=> load <interface> [<dev[:part]> [<addr> [<filename> [bytes [pos]]]]]
```

For example:

```
=> load mmc 0:2 $load_addr firmware_ls1046afrwy_uboot_qspiboot.img
```

Use the following command if the SD card is formatted/created on a Windows PC:

```
=> fatload <interface> [<dev[:part]> [<addr> [<filename> [bytes [pos]]]]]
```

For example:

```
=> fatload mmc 0:2 $load_addr firmware_ls1046afrwy_uboot_qspiboot.img
```

Use the following command if the SD card is formatted/created on a Linux PC:

```
=> ext2load <interface> [<dev[:part]> [<addr> [<filename> [bytes [pos]]]]]
```

For example:

```
=> ext2load mmc 0:2 $load_addr firmware_ls1046afrwy_uboot_qspiboot.img
```

Also note that LSDK flex-installer command puts the images on the IInd partition, so `0:2` is used in the `load` command. If the SD card is formatted on Windows PC or Linux PC for single partition only, then `0` should be used instead of `0:2` in the `fatload`/`ext2load` command.

4. Program the firmware to QSPI NOR flash.

```
=> sf probe 0:0
=> sf erase 0 +$filesize && sf write $load_addr 0 $filesize
```

5. Ensure that switch settings on the board are for QSPI NOR flash and power cycle the board. The system will automatically boot up TinyDistro (login using root/root) or LSDK distro (login using root/root or user/user) available on the removable storage device.

To program LSDK composite firmware image to SD card on FRWY-LS1046A:

1. Download the firmware (from NXP website) to the Linux host machine.

```
wget https://www.nxp.com/lgfiles/sdk/lsdk2004/firmware_ls1046afrwy_uboot_sdboot.img
```

2. Reboot the board from QSPI NOR flash and stop autoboot to enter U-Boot prompt.
3. Under U-Boot, download the firmware to the reference board using one of the following options:
   - Load firmware from the TFTP server

     ```
     => tftp $load_addr firmware_ls1046afrwy_uboot_sdboot.img
     ```

   - Load firmware image from partition on mass storage device (SD or USB)

     ```
     => load mmc <device:partition> $load_addr firmware_ls1046afrwy_uboot_sdboot.img
     ```

     For example:

     ```
     => load mmc 0:2 $load_addr firmware_ls1046afrwy_uboot_sdboot.img
     ```

Or

```
=> load usb <device:partition> $load_addr firmware_ls1046afrwy_uboot_sdboot.img
```

NOTE

Use the following command if the SD card is formatted/created using LSDK flex-installer command:

```
=> load <interface> [<dev[:part]> [<addr> [<filename> [bytes [pos]]]]]
```

For example:

```
=> load mmc 0:2 $load_addr firmware_ls1046afrwy_uboot_sdboot.img
```

Use the following command if the SD card is formatted/created on a Windows PC:

```
=> fatload <interface> [<dev[:part]> [<addr> [<filename> [bytes [pos]]]]]
```

For example:

```
=> fatload mmc 0:2 $load_addr firmware_ls1046afrwy_uboot_sdboot.img
```

Use the following command if the SD card is formatted/created on a Linux PC:

```
=> ext2load <interface> [<dev[:part]> [<addr> [<filename> [bytes [pos]]]]]
```

For example:

```
=> ext2load mmc 0:2 $load_addr firmware_ls1046afrwy_uboot_sdboot.img
```

Also note that LSDK flex-installer command puts the images on the IInd partition, so `0:2` is used in the `load` command. If the SD card is formatted on Windows PC or Linux PC for single partition only, then `0` should be used instead of `0:2` in the `fatload`/`ext2load` command.

4. Program the firmware to SD card.

```
=> mmc dev 0; mmc write $load_addr 8 1f000
```

5. Ensure that switch settings on the board are for SD boot and power cycle the board. The system will automatically boot up TinyDistro (login using root/root) or LSDK distro (login using root/root or user/user) available on the removable storage device.

4.1.9.4 Automatically download and deploy LSDK images

To automatically download and deploy LSDK images to a board using a removable storage device which can be connected to a local Linux host machine:

1. Connect the removable storage device to the Linux host machine.
2. Download `flex-installer` to deploy LSDK images.

```
$ wget https://www.nxp.com/lgfiles/sdk/lsdk2004-update-290520/flex-installer && chmod +x flex-
installer && sudo mv flex-installer /usr/bin
```

3. Execute the following flex-installer command to automatically install LSDK default `rootfs_lsdk2004_LS_arm64_main.tgz` and `bootpartition_LS_arm64_lts_4.19.tgz`.

```
$ flex-installer -i auto -m ls1046afrwy -d <device>
```

NOTE

- Use the command `cat /proc/partitions` to see a list of devices and their sizes to make sure that the correct device names have been chosen.
- The SD/USB storage drive in the Linux PC is detected as /dev/sdX, where X is a letter such as a, b, c. Make sure to choose the correct device name, because data on this device will be replaced.
- If the Linux host machine supports read/write SD card directly without an extra SD card reader device, the device name of SD card is typically mmcblk0.

4. Unplug removable storage device from the Linux host and plug into the reference board.
5. Make sure the DIP switch settings on the board are correct to boot from the desired boot medium.
6. Power-on the board. The system automatically boots up to the LSDK distro.
   - Use the following default credentials to log onto to the LSDK distro:
     — root/root, or
     — user/user

To automatically download and deploy LSDK images directly to the target storage drive on a board:

1. Plug the storage device into the reference board.
2. Check DIP switch settings for the desired boot type.
3. Power-on the board and execute the following command under U-boot prompt to boot the board to TinyDistro. TinyDistro is a non-customizable prebuilt ramdisk rootfs deployed in flash media on the reference board which can be used to execute the flex-installer commands. This rootfs fits into the firmware image on flash and is therefore called tiny.
   - For SD boot:

     ```
     => run sd_bootcmd
     ```

   - For QSPI NOR boot:

     ```
     => run qspi_bootcmd
     ```

4. Login to TinyDistro as “root” and bring up a network interface.

   Dynamic IP address assignment:

   ```
   $ udhcpc -i <port name in TinyDistro>
   ```

   Static IP address assignment:

   ```
   $ ifconfig <port name in TinyDistro> <IP address> netmask <netmask address> up
   ```

   The port name in Linux TinyDistro corresponding to each of the ports on the reference board chassis is given in section FRWY-LS1046A reference information

5. Download `flex-installer` to deploy LSDK images.

   ```
   $ wget https://www.nxp.com/lgfiles/sdk/lsdk2004-update-290520/flex-installer && chmod +x flex-installer && sudo mv flex-installer /usr/bin
   ```

6. Execute the following flex-installer command to automatically install LSDK default `rootfs_lsdk2004_LS_arm64_main.tgz` and `bootpartition_LS_arm64_lts_5.4.tgz`.

   ```
   $ flex-installer -i auto -m ls1046afrwy -d <device>
   ```

NOTE

- Use the command `cat /proc/partitions` to see a list of devices and their sizes to make sure that the correct device names have been chosen.
- The SD/USB storage drive in the Linux PC is detected as /dev/sdX, where X is a letter such as a, b, c. Make sure to choose the correct device name, because data on this device will be replaced.
- If the Linux host machine supports read/write SD card directly without an extra SD card reader device, the device name of SD card is typically mmcblk0.

7. Power-on the board. The system automatically boots up to the LSDK distro.
   - Use the following default credentials to log onto to the LSDK distro:
     — root/root, or
     — user/user

4.1.10 LSDK Quick Start Guide for LS1046ARDB

4.1.10.1 Introduction

The following sections describe the procedure to program LSDK composite firmware for LS1046A, and the most common use case procedure to automatically download and deploy LSDK default images to LS1046A using flex-installer. For other optional/special use case examples, see Download and deploy LSDK images with flex-installer in Linux environment.

For more information on the different components of the board and on how to configure and boot the board, see QorIQ LS1046A Reference Design Board Getting Started Guide.

For a list of brief how-tos to help you modify/update individual LSDK components such as, U-Boot, Linux kernel, DPAA1 FMAN ucode on LS1046ARDB when booting the board from a specific boot source, such as QSPI or SD, see NXP community.

4.1.10.2 LS1046ARDB reference information

This section provides general information about LS1046ARDB which may come in handy as a reference while completing steps for deploying LSDK that follow.

Ethernet port map

The port name in Linux TinyDistro corresponding to each of the six ports on the reference board chassis is given in the table below.

Port name on chassis	Port name in U-Boot	Port name in Linux (TinyDistro)	Port name in Linux (NXP LSDK userland)
RGMII1	FM1@DTSEC3	eth0	fm1-mac3
RGMII2	FM1@DTSEC4	eth1	fm1-mac4
SGMII1	FM1@DTSEC5	eth2	fm1-mac5
SGMII2	FM1@DTSEC6	eth3	fm1-mac6
10G Copper	FM1@TGEC1	eth4	fm1-mac9
10G SEP+	FM1@TGEC2	eth5	fm1-mac10

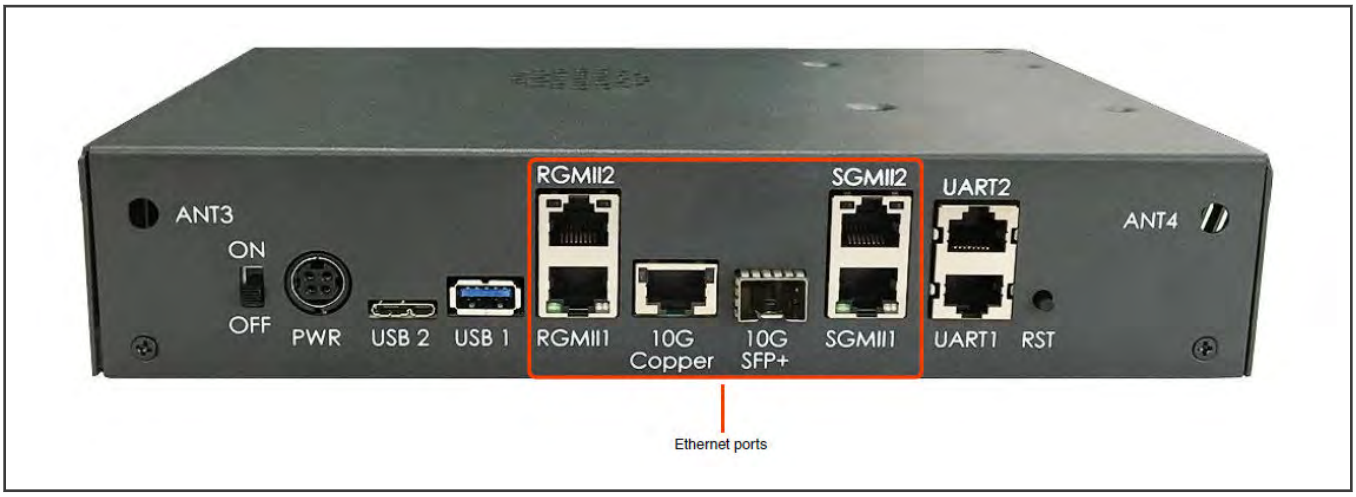

System memory map

Start Physical Address	End Physical Address	Memory Type	Size
0x00_0000_0000	0x00_000F_FFFF	Secure Boot ROM	1MB
0x00_0100_0000	0x00_0FFF_FFFF	CCSRBAR	240MB
0x00_1000_0000	0x00_1000_FFFF	OCRAM0	64KB
0x00_1001_0000	0x00_1001_FFFF	OCRAM1	64KB
0x00_2000_0000	0x00_20FF_FFFF	DCSR	16MB
0x00_7E80_0000	0x00_7E80_FFFF	IFC - NAND Flash	64KB
0x00_7FB0_0000	0x00_7FB0_0FFF	IFC - CPLD	4KB
0x00_8000_0000	0x00_FFFF_FFFF	DRAM1	2GB
0x05_0000_0000	0x05_07FF_FFFF	QMAN S/W Portal	128M
0x05_0800_0000	0x05_0FFF_FFFF	BMAN S/W Portal	128M
0x08_8000_0000	0x09_FFFF_FFFF	DRAM2	6GB
0x40_0000_0000	0x47_FFFF_FFFF	PCI Express1	32G
0x48_0000_0000	0x4F_FFFF_FFFF	PCI Express2	32G
0x50_0000_0000	0x57_FFFF_FFFF	PCI Express3	32G

Supported boot options

LS1046ARDB supports the following boot options:

- SD
- QSPI NOR flash

On-board switch options

The RDB has user selectable switches for evaluating different boot options for the LS1046A device as given in the table below ('0' is OFF, '1' is ON).

Boot source	SW3[1:8]	SW4[1:8]	SW5[1:8]
QSPI NOR flash0 (default)	01000110	00111011	00100010
QSPI NOR flash1	01001110	00111011	00100010
SD card	01000110	00111011	00100000

Note that changing the boot device configuration from the default setting may require additional changes in the RCW or in other code images. For information on RCW naming convention for LS1046ARDB seehttps://source.codeaurora.org/external/qoriq/qoriq-components/rcw/tree/ls1046ardb/README?h=github.com.qoriq-os/integration

QSPI NOR flash banks

LS1046ARDB has two QSPI NOR flash connected over QSPI controller. Only one QSPI NOR flash is available at a time depending upon the board switch settings as given in preceding topic. These switch settings can also be overridden by CPLD commands. To protect the default U-Boot in flash0, it is a convention employed by NXP to deploy work images into the flash1, and then switch to the flash1 for testing. Switching to the flash1 can be done in software using CPLD command that effectively swaps the flash0 with the flash1. This protects flash0 and keeps the board bootable under all circumstances. To determine the current bank, refer to the example U-Boot log given below (flash0 is displayed as vBank 0 and flash1 is displayed as vBank 4).

```
U-Boot 2018.09-09791-ga10b3fce96 (Nov 30 2018 - 12:40:11 +0800)

SoC:  LS1046AE Rev1.0 (0x87070010)
Clock Configuration:
       CPU0(A72):1800 MHz  CPU1(A72):1800 MHz  CPU2(A72):1800 MHz
       CPU3(A72):1800 MHz
       Bus:      700  MHz  DDR:      2100 MT/s  FMAN:     800  MHz
Reset Configuration Word (RCW):
       00000000: 0e150012 10000000 00000000 00000000
       00000010: 11335559 40005012 40025000 c1000000
       00000020: 00000000 00000000 00000000 00238800
       00000030: 20124000 00003101 00000096 00000001
Model: LS1046A RDB Board
Board: LS1046ARDB, boot from QSPI vBank 4
CPLD:  V2.2
PCBA:  V2.0
SERDES Reference Clocks:
SD1_CLK1 = 156.25MHZ, SD1_CLK2 = 100.00MHZ
I2C:   ready
DRAM:  7.9 GiB (DDR4, 64-bit, CL=15, ECC on)
       DDR Chip-Select Interleaving Mode: CS0+CS1
SEC0: RNG instantiated
Using SERDES1 Protocol: 4403 (0x1133)
Using SERDES2 Protocol: 21849 (0x5559)
NAND:  512 MiB
MMC:   FSL_SDHC: 0
Loading Environment from SPI Flash... SF: Detected s25fs512s with page size 256 Bytes, erase size 256
KiB, total 64 MiB
OK
EEPROM: NXID v1
In:    serial
Out:   serial
Err:   serial
Net:   SF: Detected s25fs512s with page size 256 Bytes, erase size 256 KiB, total 64 MiB
Fman1: Uploading microcode version 106.4.18
FM1@TGEC1: system interface XFI
FM1@TGEC1: Aquantia AQR107 Firmware Version 3.1.5
```

```
PCIe0: pcie@3400000 Root Complex: no link
PCIe1: pcie@3500000 Root Complex: no link
PCIe2: pcie@3600000 Root Complex: x1 gen1
e1000: 00:15:17:8a:c6:5b
       FM1@DTSEC3, FM1@DTSEC4, FM1@DTSEC5, FM1@DTSEC6, FM1@TGEC1, FM1@TGEC2, e1000#0 [PRIME]
Warning: e1000#0 MAC addresses don't match:
Address in SROM is         00:15:17:8a:c6:5b
Address in environment is  00:e0:0c:00:8e:06

Warning: e1000#0 failed to set MAC address

=>
```

Boot option switching

Boot switching can be performed in U-Boot using the following commands:

- Switch to QSPI NOR flash0 (default):

```
=>cpld reset
```

- Switch to QSPI NOR flash1:

```
=>cpld reset altbank
```

- Switch to SD:

```
=>cpld reset sd
```

4.1.10.3 LS1046ARDB recovery information

If LS1046ARDB board fails to boot from QSPI NOR flash 0, you can recover QSPI NOR flash 0 from QSPI NOR flash 1 by following these steps:

1. Download the prebuilt composite firmware image:

```
$ wget http://www.nxp.com/lgfiles/sdk/lsdk2004/firmware_ls1046ardb_uboot_qspiboot.img
```

2. Boot LS1046ARDB from QSPI NOR flash1 with the following switch settings:

   `SW3 = 01001110`, `SW4 = 00111011`, `SW5 = 00100010`

3. Program QSPI NOR flash0 from QSPI NOR flash1:

```
=> tftp $load_addr firmware_ls1046ardb_uboot_qspiboot.img
=> sf probe 0:1
=> sf erase 0 +$filesize && sf write $load_addr 0 $filesize
```

4. Reset and boot the board from QSPI NOR flash0:

```
=> cpld reset
```

NOTE

If LS1046ARDB fails to boot from both the QSPI NOR flash banks, you need to recover the board using **CodeWarrior Development Studio for QorIQ LS series - ARM V8 ISA**. For steps to recover the board using the CodeWarrior tool, see section "*8.6 Board Recovery*" in ARM V8 ISA, Targeting Manual

4.1.10.4 Program LSDK composite firmware image

This topic explains steps to program QSPI NOR firmware image to QSPI NOR flash on LS1046ARDB and SD firmware image to SD card on LS1046ARDB.

To program LSDK composite firmware image to QSPI NOR flash on LS1046ARDB:

1. Download the firmware (from NXP website) to the Linux host machine.

```
$ wget https://www.nxp.com/lgfiles/sdk/lsdk2004/firmware_ls1046ardb_uboot_qspiboot.img
```

2. Reboot the board from QSPI NOR flash 0 and stop autoboot to enter U-Boot prompt.
3. Under U-Boot, download the firmware to the reference board using one of the following options:
   - Load firmware from the TFTP server

```
=> tftp $load_addr firmware_ls1046ardb_uboot_qspiboot.img
```

   - Load firmware image from partition on mass storage device (SD, USB, or SATA)

```
=> load mmc <device:partition> $load_addr firmware_ls1046ardb_uboot_qspiboot.img
```

     For example:

```
=> load mmc 0:2 $load_addr firmware_ls1046ardb_uboot_qspiboot.img
```

     Or

```
=> load usb <device:partition> $load_addr firmware_ls1046ardb_uboot_qspiboot.img
```

     Or

```
=> load scsi <device:partition> $load_addr firmware_ls1046ardb_uboot_qspiboot.img
```

NOTE

Use the following command if the SD card is formatted/created using LSDK flex-installer command:

```
=> load <interface> [<dev[:part]> [<addr> [<filename> [bytes [pos]]]]]
```

For example:

```
=> load mmc 0:2 $load_addr firmware_ls1046ardb_uboot_qspiboot.img
```

Use the following command if the SD card is formatted/created on a Windows PC:

```
=> fatload <interface> [<dev[:part]> [<addr> [<filename> [bytes [pos]]]]]
```

For example:

```
=> fatload mmc 0:2 $load_addr firmware_ls1046ardb_uboot_qspiboot.img
```

Use the following command if the SD card is formatted/created on a Linux PC:

```
=> ext2load <interface> [<dev[:part]> [<addr> [<filename> [bytes [pos]]]]]
```

For example:

```
=> ext2load mmc 0:2 $load_addr firmware_ls1046ardb_uboot_qspiboot.img
```

Also note that LSDK flex-installer command puts the images on the IInd partition, so `0:2` is used in the `load` command. If the SD card is formatted on Windows PC or Linux PC for single partition only, then `0` should be used instead of `0:2` in the `fatload`/`ext2load` command.

4. Program the firmware to QSPI NOR flash 1.

```
=> sf probe 0:1
=> sf erase 0 +$filesize && sf write $load_addr 0 $filesize
```

5. Reset and boot the board from QSPI NOR flash 1. The system will automatically boot up TinyDistro (login using root/root) or LSDK distro (login using root/root or user/user) available on the removable storage device.

```
=> cpld reset altbank
```

To program LSDK composite firmware image to SD card on LS1046ARDB:

1. Download the firmware (from NXP website) to the Linux host machine.

```
wget https://www.nxp.com/lgfiles/sdk/lsdk2004/firmware_ls1046ardb_uboot_sdboot.img
```

2. Reboot the board from QSPI NOR flash 0 and stop autoboot to enter U-Boot prompt.
3. Under U-Boot, download the firmware to the reference board using one of the following options:
   - Load firmware from the TFTP server

```
=> tftp $load_addr firmware_ls1046ardb_uboot_sdboot.img
```

   - Load firmware image from partition on mass storage device (SD, USB, or SATA)

```
=> load mmc <device:partition> $load_addr firmware_ls1046ardb_uboot_sdboot.img
```

For example:

```
=> load mmc 0:2 $load_addr firmware_ls1046ardb_uboot_sdboot.img
```

Or

```
=> load usb <device:partition> $load_addr firmware_ls1046ardb_uboot_sdboot.img
```

Or

```
=> load scsi <device:partition> $load_addr firmware_ls1046ardb_uboot_sdboot.img
```

NOTE

Use the following command if the SD card is formatted/created using LSDK flex-installer command:

```
=> load <interface> [<dev[:part]> [<addr> [<filename> [bytes [pos]]]]]
```

For example:

```
=> load mmc 0:2 $load_addr firmware_ls1046ardb_uboot_sdboot.img
```

Use the following command if the SD card is formatted/created on a Windows PC:

```
=> fatload <interface> [<dev[:part]> [<addr> [<filename> [bytes [pos]]]]]
```

For example:

```
=> fatload mmc 0:2 $load_addr firmware_ls1046ardb_uboot_sdboot.img
```

Use the following command if the SD card is formatted/created on a Linux PC:

```
=> ext2load <interface> [<dev[:part]> [<addr> [<filename> [bytes [pos]]]]]
```

For example:

```
=> ext2load mmc 0:2 $load_addr firmware_ls1046ardb_uboot_sdboot.img
```

Also note that LSDK flex-installer command puts the images on the IInd partition, so `0:2` is used in the `load` command. If the SD card is formatted on Windows PC or Linux PC for single partition only, then `0` should be used instead of `0:2` in the `fatload`/`ext2load` command.

4. Program the firmware to SD card.

```
=> mmc dev 0; mmc write $load_addr 8 1f000
```

5. Reset and boot the board from SD card. The system will automatically boot up TinyDistro (login using root/root) or LSDK distro (login using root/root or user/user) available on the removable storage device.

```
=> cpld reset sd
```

4.1.10.5 Automatically download and deploy LSDK images

To automatically download and deploy LSDK images to a board using a removable storage device which can be connected to a local Linux host machine:

1. Connect the removable storage device to the Linux host machine.

2. Download `flex-installer` to deploy LSDK images.

```
$ wget https://www.nxp.com/lgfiles/sdk/lsdk2004-update-290520/flex-installer && chmod +x flex-installer && sudo mv flex-installer /usr/bin
```

3. Execute the following flex-installer command to automatically install LSDK default `rootfs_lsdk2004_LS_arm64_main.tgz` and `bootpartition_LS_arm64_lts_4.19.tgz`.

```
$ flex-installer -i auto -m ls1046ardb -d <device>
```

NOTE

- Use the command `cat /proc/partitions` to see a list of devices and their sizes to make sure that the correct device names have been chosen.
- The SD/USB/SATA storage drive in the Linux PC is detected as /dev/sdX, where X is a letter such as a, b, c. Make sure to choose the correct device name, because data on this device will be replaced.
- If the Linux host machine supports read/write SD card directly without an extra SD card reader device, the device name of SD card is typically mmcblk0.

4. Unplug removable storage device from the Linux host and plug into the reference board.
5. Make sure the DIP switch settings on the board are correct to boot from the desired boot medium.
6. Power-on the board. The system automatically boots up to the LSDK distro.
   - Use the following default credentials to log onto to the LSDK distro:
     - root/root, or
     - user/user

To automatically download and deploy LSDK images directly to the target storage drive on a board:

1. Plug the storage device into the reference board.
2. Check DIP switch settings for the desired boot type.
3. Power-on the board and execute the following command under U-boot prompt to boot the board to TinyDistro. TinyDistro is a non-customizable prebuilt ramdisk rootfs deployed in flash media on the reference board which can be used to execute the flex-installer commands. This rootfs fits into the firmware image on flash and is therefore called tiny.
   - For sd boot:

```
=> run sd_bootcmd
```

   - For QSPI NOR boot:

```
=> run qspi_bootcmd
```

4. Login to TinyDistro as “root” and bring up a network interface.

   Dynamic IP address assignment:

```
$ udhcpc -i <port name in TinyDistro>
```

   Static IP address assignment:

```
$ ifconfig <port name in TinyDistro> <IP address> netmask <netmask address> up
```

   The port name in Linux TinyDistro corresponding to each of the ports on the reference board chassis is given in section LS1046ARDB reference information

5. Download `flex-installer` to deploy LSDK images.

```
$ wget https://www.nxp.com/lgfiles/sdk/lsdk2004-update-290520/flex-installer && chmod +x flex-installer && sudo mv flex-installer /usr/bin
```

6. Execute the following flex-installer command to automatically install LSDK default `rootfs_lsdk2004_LS_arm64_main.tgz` and `bootpartition_LS_arm64_lts_4.19.tgz`.

```
$ flex-installer -i auto -m ls1046ardb -d <device>
```

NOTE

- Use the command `cat /proc/partitions` to see a list of devices and their sizes to make sure that the correct device names have been chosen.
- The SD/USB/SATA storage drive in the Linux PC is detected as /dev/sdX, where X is a letter such as a, b, c. Make sure to choose the correct device name, because data on this device will be replaced.
- If the Linux host machine supports read/write SD card directly without an extra SD card reader device, the device name of SD card is typically mmcblk0.

7. Power-on the board. The system automatically boots up to the LSDK distro.
   - Use the following default credentials to log onto to the LSDK distro:
     - root/root, or
     - user/user

4.1.10.6 Frame Manager Configuration (FMC) tool

By default, FMan has been configured for Parse-Classify-Distribute (PCD). This means that without any further action from the user, Fman enqueues received frames from a particular flow to the same receive queue. This prevents Rx packet reorder issues and improves performance.

This default FMan configuration uses configuration and policy files that are provided in NXP's Linux LSDK to perform PCD. These files are in xml format and are created with the objective of preserving packet ordering per flow. For LS1046ARDB, these files are available at the following path:

```
/etc/fmc/config/private/ls1046ardb/RR_FFSSPPPH_1133_5559
```

However, if a user wants to apply a configuration other than the one which is applied by default, the user needs to run following command after the board boots to Linux.

1. Change directory to the parent directory of the user's custom configuration and policy files.
2. Run the FMC tool command:

```
$ fmc -c <config.xml> -p <policy.xml> -a
```

4.1.11 LSDK Quick Start Guide for LS1088ARDB

4.1.11.1 Introduction

The following sections describe the procedure to program LSDK composite firmware for LS1088ARDB and LS1088ARDB-PB, and the most common use case procedure to automatically download and deploy LSDK default images to LS1088ARDB and LS1088ARDB-PB using flex-installer. For other optional/special use case examples, see Download and deploy LSDK images with flex-installer in Linux environment.

For more information on the different components of the board and on how to configure and boot the board, see QorIQ LS1088A Reference Design Board (LS1088ARDB-PB) Getting Started Guide.

For a list of brief how-tos to help you modify/update individual LSDK components such as, U-Boot, Linux kernel, DPL, DPC, on LS1088ARDB/LS1088ARDB-PB when booting the board from a specific boot source, such as QSPI or SD, see NXP community.

4.1.11.2 LS1088ARDB and LS1088ARDB-PB reference information

This section provides general information about LS1088ARDB and LS1088ARDB-PB which may come in handy as a reference while completing steps for deploying LSDK that follow.

NOTE

LS1088ARDB-PB is a variant of LS1088ARDB, therefore most of the information should be the same as LS1088ARDB. Following sections specify the differences if any.

Ethernet port map

The table below shows the mapping of Ethernet port names appearing on chassis front panel with the port names in U-Boot and Linux.

Table 17. Ethernet port names mapping

Port name on chassis	Port name in Linux (tinyDistro and Ubuntu userland)	Port name in U-Boot	Description
ETH0	ethx	DPMAC2@xgmii	XFI copper interface
ETH1	ethx	DPMAC1@xgmii	XFI optical interface
ETH2	ethx	DPMAC7@qsgmii	QSGMII copper interface
ETH3	ethx	DPMAC8@qsgmii	QSGMII copper interface
ETH4	ethx	DPMAC9@qsgmii	QSGMII copper interface
ETH5	ethx	DPMAC10@qsgmii	QSGMII copper interface
ETH6	ethx	DPMAC3@qsgmii	QSGMII copper interface
ETH7	ethx	DPMAC4@qsgmii	QSGMII copper interface
ETH8	If there is a PCIe card plugged in, it is detected as eth1. If there is no PCIe, it is detected as eth0.	DPMAC5@qsgmii	QSGMII copper interface
ETH9	ethx	DPMAC6@qsgmii	QSGMII copper interface
Note: For other ports, interfaces are created dynamically in Linux. So, the port name is determined by the creation order.			

System memory map

Start address	End address	Size	Allocation	Comment
0x0000_0000_0000	0x0000_000F_FFFF	1MB	CCSR - Boot ROM	64KB
0x0000_0010_0000	0x0000_00FF_FFFF	15MB	Reserved	
0x0000_0100_0000	0x0000_0FFF_FFFF	240MB	CCSR	
0x0000_1000_0000	0x0000_10FF_FFFF	16MB	Reserved	SP alias this space to DCSR. Do not allocate.

Table continues on the next page...

Table continued from the previous page...

0x0000_1100_0000	0x0000_11FF_FFFF	16MB	Reserved	SP alias this space to DCSR. Do not allocate.
0x0000_1200_0000	0x0000_13FF_FFFF	32MB	Reserved	SP alias this space to DCSR. Do not allocate.
0x0000_1400_0000	0x0000_17FF_FFFF	64MB	Reserved	
0x0000_1800_0000	0x0000_181F_FFFF	2MB	OCRAM	128KB
0x0000_1820_0000	0x0000_18FF_FFFF	14MB	Reserved	
0x0000_1900_0000	0x0000_19FF_FFFF	16MB	CoreSight STM	16MB
0x0000_1A00_0000	0x0000_1BFF_FFFF	32MB	Reserved	
0x0000_1C00_0000	0x0000_1CFF_FFFF	16MB	Reserved	
0x0000_1D00_0000	0x0000_1FFF_FFFF	48MB	Reserved	
0x0000_2000_0000	0x0000_2FFF_FFFF	256MB	Quad SPI Region #1 (0-256MB)	More QSPI space below 256MB
0x0000_3000_0000	0x0000_3FFF_FFFF	256MB	IFC Region #1 (0-256MB)	More IFC space below 256MB
0x0000_4000_0000	0x0000_5FFF_FFFF	512MB	Reserved	
0x0000_6000_0000	0x0000_7FFF_FFFF	512MB	Reserved	
0x0000_8000_0000	0x0000_9FFF_FFFF	512MB	GPP DRAM Region #1 (0-2GB)	
0c0000_A000_0000	0x0000_BFFF_FFFF	512MB		
0x0000_C000_0000	0x0000_DFFF_FFFF	512MB		
0x0000_E000_0000	0x0000_FFFF_FFFF	512MB		
0x0001_0000_0000	0x0001_FFFF_FFFF	4GB	Reserved	
0x0002_0000_0000	0x0003_FFFF_FFFF	8GB		
0x0004_0000_0000	0x0004_0FFF_FFFF	256MB	Hole	QSPI space #1 maps on top of this space
0x0004_1000_0000	0x0004_FFFF_FFFF	3.75GB	Quad SPI Region #2 (256MB-4GB)	3.75GB
0x0005_0000_0000	0x0005_0FFF_FFFF	256MB	Hole	IFC space #1 maps on top of this space
0x0005_1000_0000	0x0005_FFFF_FFFF	3.75GB	IFC Region #2 (256MB-4GB)	3.75GB
0x0006_0000_0000	0x0006_FFFF_FFFF	4GB	Reserved	
0x0007_0000_0000	0x0007_3FFF_FFFF	1GB	DCSR	
0x0007_4000_0000	0x0007_FFFF_FFFF	3GB	Reserved	
DPAA2 Portal Map				
0x0008_0000_0000	0x0008_03FF_FFFF	64MB	Reserved	

Table continues on the next page...

Table continued from the previous page...

0x0008_0400_0000	0x0008_07FF_FFFF	64MB	Reserved	
0x0008_0800_0000	0x0008_0BFF_FFFF	64MB	Reserved	
0x0008_0C00_0000	0x0008_0FFF_FFFF	64MB	MC - 1024 portals	32MB (512 portal)
0x0008_1000_0000	0x0008_17FF_FFFF	128MB	Reserved	
0x0008_1800_0000	0x0008_1FFF_FFFF	128MB	QBMAN portals	128MB
0x0008_0000_0000	0x000B_FFFF_FFFF	15.5GB	Reserved	
0x000C_0000_0000	0x000F_FFFF_FFFF	16GB	Reserved	
High-speed I/O (PCIe)				
0x0010_0000_0000	0x0011_FFFF_FFFF	8GB	Reserved	
0x0012_0000_0000	0x0013_FFFF_FFFF	8GB	Reserved	
0x0014_0000_0000	0x0015_FFFF_FFFF	8GB	Reserved	
0x0016_0000_0000	0x0017_FFFF_FFFF	8GB	Reserved	
0x0018_0000_0000	0x0019_FFFF_FFFF	8GB	Reserved	
0x001A_0000_0000	0x001B_FFFF_FFFF	8GB	Reserved	
0x001C_0000_0000	0x001D_FFFF_FFFF	8GB	Reserved	
0x001E_0000_0000	0x001F_FFFF_FFFF	8GB	Reserved	
0x0020_0000_0000	0x0027_FFFF_FFFF	32GB	PCIe1	
0x0028_0000_0000	0x002F_FFFF_FFFF	32GB	PCIe2	
0x0030_0000_0000	0x0037_FFFF_FFFF	32GB	PCIe3	
0x0038_0000_0000	0x003F_FFFF_FFFF	32GB	Reserved	
DPAA2 External address map				
0x0040_0000_0000	0x0040_FFFF_FFFF	4GB	Reserved	
0x0041_0000_0000	0x0041_FFFF_FFFF	4GB	Reserved	
0x0042_0000_0000	0x0042_FFFF_FFFF	4GB	Reserved	
0x0043_0000_0000	0x0043_FFFF_FFFF	4GB	WRIOP access window	
0x0044_0000_0000	0x0047_FFFF_FFFF	16GB	Reserved	
0x0048_0000_0000	0x0048_FFFF_FFFF	4GB	Reserved	
0x0049_0000_0000	0x0049_FFFF_FFFF	4GB	Reserved	
0x004A_0000_0000	0x004A_FFFF_FFFF	4GB	Reserved	
0x004B_0000_0000	0x004B_FFFF_FFFF	4GB	AIOP access window	
0x004C_0000_0000	0x004F_FFFF_FFFF	16GB	Packet Express Buffer	1MB
0x0050_0000_0000	0x005F_FFFF_FFFF	64GB	Reserved	

Table continues on the next page...

Table continued from the previous page...

0x0060_0000_0000	0x007F_FFFF_FFFF	128GB	Reserved	
0x0080_0000_0000	0x0080_7FFF_FFF	2GB	Hole	
0x0080_8000_0000	0x00FF_FFFF_FFFF	510GB	GPP DRAM Region #2 (2-512GB)	

Supported boot options

LS1088ARDB and LS1088ARDB-PB support the following boot options:

- SD
- QSPI NOR Flash

NOTE

— When booting from SD, the RCW, U-Boot, and other firmware components are located on the SD card starting at block 8.

— When booting from QSPI NOR flash, the RCW, U-Boot, and other firmware components are located in flash starting at offset 0x0. See LSDK Memory Layout for additional information.

On-board switch options

The RDBs have user selectable switches for evaluating different boot options for the LS1088A device as given in the table below ('0' is OFF, '1' is ON).

NOTE

Even though the on-board switch settings given in the table below are same for LS1088ARDB and LS1088ARDB-PB, the significance of some of these settings may differ. See “Switch settings” in LS1088ARDB Getting Started Guide and “Switch configuration” in LS1088ARDB-PB Getting Started Guide for detailed description of each switch setting.

Boot source	SW1[1:8]	SW2[1:8]	SW3[1:8]	SW4[1:8]	SW5[1:8]
QSPI NOR flash0 (default)	0011 0001	X100 0000	1110 0010	1001 0011	0111 0000
QSPI NOR flash1	0011 0001	X100 0001	1110 0010	1001 0011	0111 0000
SD card	0010 0000	0100 0000	1110 0010	1001 0011	0111 0000

Note that changing the boot device configuration from the default setting may require additional changes in the RCW or in other code images. For information on RCW naming convention for LS1088ARDB see https://source.codeaurora.org/external/qoriq/qoriq-components/rcw/tree/ls1088ardb/README?h=github.com.qoriq-os/integration

QSPI NOR flash banks

LS1088ARDB and LS1088ARDB-PB have 2 QSPI NOR flash connected over QSPI controller. Only one QSPI NOR flash is available at a time depending upon the board switch settings as given in preceding topic. These switch settings can also be overridden using qixis_reset commands in U-Boot.

To protect the default U-Boot in flash0, it is a convention employed by NXP to deploy work images into flash1, and then switch to flash1 for testing. Switching to flash1 can be done in software using qixis_reset command that effectively swaps flash0 with flash1. This protects flash0 and keeps the board bootable under all circumstances.

To determine the current bank, refer to the example U-Boot log given below:

```
NOTICE:  UDIMM 18ASF1G72AZ-2G6B1

NOTICE:  8 GB DDR4, 64-bit, CL=15, ECC on, CS0+CS1
NOTICE:  BL2: v1.5(release):LSDK-18.12-TC1-5-gbfe6a23b
NOTICE:  BL2: Built : 11:56:28, Dec 11 2018
NOTICE:  BL31: v1.5(release):LSDK-18.12-TC1-5-gbfe6a23b
NOTICE:  BL31: Built : 12:25:59, Dec 12 2018
NOTICE:  Welcome to LS1088 BL31 Phase


U-Boot 2018.09-09806-gff3e128 (Dec 12 2018 - 12:14:41 +0800), Build: jenkins-dash-
uboot_devel_build-135

SoC:  LS1088AE Rev1.0 (0x87030010)
Clock Configuration:
       CPU0(A53):1600 MHz  CPU1(A53):1600 MHz  CPU2(A53):1600 MHz
       CPU3(A53):1600 MHz  CPU4(A53):1600 MHz  CPU5(A53):1600 MHz
       CPU6(A53):1600 MHz  CPU7(A53):1600 MHz
       Bus:      700  MHz  DDR:      2100 MT/s
Reset Configuration Word (RCW):
       00000000: 4000541c 00000040 00000000 00000000
       00000010: 00000000 000a0000 00300000 00000000
       00000020: 02e011a0 00002580 00000000 00000040
       00000030: 0000005b 00000000 00002403 00000000
       00000040: 00000000 00000000 00000000 00000000
       00000050: 00000000 00000000 00000000 00000000
       00000060: 00000000 00000000 00000011 000009e7
       00000070: 44110000 00107777
I2C:   ready
VID: Core voltage after adjustment is at 1025 mV
DRAM:  7.9 GiB
DDR    7.9 GiB (DDR4, 64-bit, CL=15, ECC on)
       DDR Chip-Select Interleaving Mode: CS0+CS1
Using SERDES1 Protocol: 29 (0x1d)
Using SERDES2 Protocol: 19 (0x13)
NAND:  512 MiB
MMC:   FSL_SDHC: 0
Loading Environment from SPI Flash... SF: Detected s25fs512s with page size 256 Bytes, erase size 256
KiB, total 64 MiB
OK
EEPROM: NXID v1
In:    serial
Out:   serial
Err:   serial
Model: NXP Layerscape 1088a RDB Board
Board: LS1088ARDB-PB, Board Arch: V1, Board version: B, boot from QSPI:1
CPLD: v3.0
SERDES1 Reference : Clock1 = 100MHz Clock2 = 156.25MHz
SERDES2 Reference : Clock1 = 100MHz Clock2 = 100MHz
Net:   DPMAC2@xgmii: system interface XFI
DPMAC2@xgmii: Aquantia AQR105 Firmware Version 2.0.b
PCIe0: pcie@3400000 Root Complex: no link
PCIe1: pcie@3500000 disabled
PCIe2: pcie@3600000 Root Complex: no link
DPMAC1@xgmii, DPMAC2@xgmii, DPMAC3@qsgmii, DPMAC4@qsgmii, DPMAC5@qsgmii [PRIME], DPMAC6@qsgmii,
DPMAC7@qsgmii, DPMAC8@qsgmii, DPMAC9@qsgmii, DPMAC10@qsgmii
=>
```

Boot option switching can be performed in U-Boot using the following statements.

- Switch to QSPI NOR flash 0 (default):

```
=>qixis_reset
```

- Switch to QSPI NOR flash 1:

```
=>qixis_reset altbank
```

- Switch to SD:

```
=>qixis_reset sd
```

U-Boot environment variables

- DPAA2-specific Environment Variables
  - **mcboottimeout:** Defines Management Complex boot timeout in milliseconds. If this variable is not defined, the compile-time value CONFIG_SYS_LS_MC_BOOT_TIMEOUT_MS will be the default. Normally, users do not need to set this variable because the default is acceptable.
  - **mcmemsize:** Defines amount of system DDR to be used by the Management Complex. If this variable is not defined, the compile-time value 0x70000000 or 1.75GB will be the default. Normally, users do not need to set this variable because the default is acceptable.
  - **mcinitcmd:** Contains commands to load and start the Management Complex automatically before the U-Boot countdown to boot starts. If this variable is defined, its contents are run. The default value assumes that the Management Complex (MC) firmware and Data Path Control file are stored in QSPI NOR/SD flash at fixed addresses.
- Environment variables that are not specific to DPAA2
  - bootcmd: Contains commands that are automatically executed when the U-Boot boot command is run. This happens automatically when the user does not interrupt U-Boot's initial count down.

For more information on U-Boot distro boot command, see “LSDK U-Boot uses distro boot feature” in LSDK documentation.

4.1.11.3 LS1088ARDB and LS1088ARDB-PB recovery information

If LS1088ARDB/LS1088ARDB-PB board fails to boot from QSPI NOR flash 0, you can recover QSPI NOR flash 0 from QSPI NOR flash 1 by following these steps:

1. Download the prebuilt composite firmware image:

```
$ wget https://www.nxp.com/lgfiles/sdk/lsdk2004/
firmware_ls1088ardb_pb_uboot_qspiboot.img
```

NOTE

Please note that LS1088ARDB is not supported LSDK 18.12 release onwards.

2. Boot LS1088ARDB/LS1088ARDB-PB from QSPI NOR flash 1 with the following switch settings:
   - SW1[1:8] = 0011 0001
   - SW2[1:8] = X100 0001
   - SW3[1:8] = 1110 0010
   - SW4[1:8] = 1001 0011
   - SW5[1:8] = 0111 0000

3. Program QSPI NOR flash 0 from QSPI NOR flash 1:

```
=> sf probe 0:1
=> tftp $load_addr firmware_ls1088ardb_pb_uboot_qspiboot.img
=> sf erase 0x0 +$filesize && sf write $load_addr 0x0 $filesize
```

4. Reset and boot the board from QSPI NOR flash 0:

```
=> qixis_reset
```

NOTE

If LS1088ARDB/LS1088ARDB-PB fails to boot from both the QSPI NOR flash banks, you need to recover the board using **CodeWarrior Development Studio for QorIQ LS series - ARM V8 ISA**. For steps to recover the board using the CodeWarrior tool, see section "*8.6 Board Recovery*" in ARM V8 ISA, Targeting Manual

4.1.11.4 Program LSDK composite firmware image

This topic explains steps to program QSPI NOR firmware image to QSPI NOR flash on LS1088ARDB/LS1088ARDB-PB and SD firmware image to SD card on LS1088ARDB/LS1088ARDB-PB.

To program LSDK composite firmware image to QSPI NOR flash on LS1088ARDB/LS1088ARDB-PB:

1. Download the firmware (from NXP website) to the Linux host machine.

```
$ wget https://www.nxp.com/lgfiles/sdk/lsdk2004/firmware_ls1088ardb_pb_uboot_qspiboot.img
```

NOTE

Please note that prebuilt LS1088ARDB images are not available with LSDK 18.12 release onwards.

2. Reboot the board from QSPI NOR flash 0 and stop autoboot to enter U-Boot prompt.
3. Under U-Boot, download the firmware to the reference board using one of the following options:
   - Load firmware from the TFTP server

     ```
     => tftp $load_addr firmware_ls1088ardb_pb_uboot_qspiboot.img
     ```

   - Load firmware image from partition on mass storage device (SD, USB, or SATA)

     ```
     => load mmc <device:partition> $load_addr firmware_ls1088ardb_pb_uboot_qspiboot.img
     ```

     For example:

     ```
     => load mmc 0:2 $load_addr firmware_ls1088ardb_pb_uboot_qspiboot.img
     ```

     Or

     ```
     => load usb <device:partition> $load_addr firmware_ls1088ardb_pb_uboot_qspiboot.img
     ```

     Or

     ```
     => load scsi <device:partition> $load_addr firmware_ls1088ardb_pb_uboot_qspiboot.img
     ```

NOTE

Use the following command if the SD card is formatted/created using LSDK flex-installer command:

```
=> load <interface> [<dev[:part]> [<addr> [<filename> [bytes [pos]]]]]
```

For example:

```
=> load mmc 0:2 $load_addr firmware_ls1088ardb_pb_uboot_qspiboot.img
```

Use the following command if the SD card is formatted/created on a Windows PC:

```
=> fatload <interface> [<dev[:part]> [<addr> [<filename> [bytes [pos]]]]]
```

For example:

```
=> fatload mmc 0:2 $load_addr firmware_ls1088ardb_pb_uboot_qspiboot.img
```

Use the following command if the SD card is formatted/created on a Linux PC:

```
=> ext2load <interface> [<dev[:part]> [<addr> [<filename> [bytes [pos]]]]]
```

For example:

```
=> ext2load mmc 0:2 $load_addr firmware_ls1088ardb_pb_uboot_qspiboot.img
```

Also note that LSDK flex-installer command puts the images on the IInd partition, so `0:2` is used in the `load` command. If the SD card is formatted on Windows PC or Linux PC for single partition only, then `0` should be used instead of `0:2` in the `fatload`/`ext2load` command.

4. Program the firmware to QSPI NOR flash 1.

```
=> sf probe 0:1
=> sf erase 0 +$filesize && sf write $load_addr 0 $filesize
```

5. Reset and boot the board from QSPI NOR flash 1. The system will automatically boot up TinyDistro (login using root/root) or LSDK distro (login using root/root or user/user) available on the removable storage device.

```
=> qixis_reset altbank
```

To program LSDK composite firmware image to SD card on LS1088ARDB/LS1088ARDB-PB:

1. Download the firmware (from NXP website) to the Linux host machine.

```
wget https://www.nxp.com/lgfiles/sdk/lsdk2004/firmware_ls1088ardb_pb_uboot_sdboot.img
```

NOTE

Please note that LS1088ARDB is not supported LSDK 18.12 release onwards.

2. Reboot the board from QSPI NOR flash 0 and stop autoboot to enter U-Boot prompt.
3. Under U-Boot, download the firmware to the reference board using one of the following options:
   - Load firmware from the TFTP server

```
=> tftp $load_addr firmware_ls1088ardb_pb_uboot_sdboot.img
```

- Load firmware image from partition on mass storage device (SD, USB, or SATA)

```
=> load mmc <device:partition> $load_addr firmware_ls1088ardb_pb_uboot_sdboot.img
```

For example:

```
=> load mmc 0:2 $load_addr firmware_ls1088ardb_pb_uboot_sdboot.img
```

Or

```
=> load usb <device:partition> $load_addr firmware_ls1088ardb_pb_uboot_sdboot.img
```

Or

```
=> load scsi <device:partition> $load_addr firmware_ls1088ardb_pb_uboot_sdboot.img
```

NOTE

Use the following command if the SD card is formatted/created using LSDK flex-installer command:

```
=> load <interface> [<dev[:part]> [<addr> [<filename> [bytes [pos]]]]]
```

For example:

```
=> load mmc 0:2 $load_addr firmware_ls1088ardb_pb_uboot_sdboot.img
```

Use the following command if the SD card is formatted/created on a Windows PC:

```
=> fatload <interface> [<dev[:part]> [<addr> [<filename> [bytes [pos]]]]]
```

For example:

```
=> fatload mmc 0:2 $load_addr firmware_ls1088ardb_pb_uboot_sdboot.img
```

Use the following command if the SD card is formatted/created on a Linux PC:

```
=> ext2load <interface> [<dev[:part]> [<addr> [<filename> [bytes [pos]]]]]
```

For example:

```
=> ext2load mmc 0:2 $load_addr firmware_ls1088ardb_pb_uboot_sdboot.img
```

Also note that LSDK flex-installer command puts the images on the IInd partition, so `0:2` is used in the `load` command. If the SD card is formatted on Windows PC or Linux PC for single partition only, then `0` should be used instead of `0:2` in the `fatload`/`ext2load` command.

4. Program the firmware to SD card.

```
=> mmc dev 0; mmc write $load_addr 8 1f000
```

5. Reset and boot the board from SD card. The system will automatically boot up TinyDistro (login using root/root) or LSDK distro (login using root/root or user/user) available on the removable storage device.

```
=> qixis_reset sd
```

4.1.11.5 Automatically download and deploy LSDK images

To automatically download and deploy LSDK images to a board using a removable storage device which can be connected to a local Linux host machine:

1. Connect the removable storage device to the Linux host machine.
2. Download `flex-installer` to deploy LSDK images.

```
$ wget https://www.nxp.com/lgfiles/sdk/lsdk2004-update-290520/flex-installer && chmod +x flex-installer && sudo mv flex-installer /usr/bin
```

3. Execute the following flex-installer command to automatically install LSDK default `rootfs_lsdk2004_LS_arm64_main.tgz` and `bootpartition_LS_arm64_lts_4.19.tgz`.

```
$ flex-installer -i auto -m ls1088ardb_pb -d <device>
```

NOTE

- Use the command `cat /proc/partitions` to see a list of devices and their sizes to make sure that the correct device names have been chosen.
- The SD/USB/SATA storage drive in the Linux PC is detected as /dev/sdX, where X is a letter such as a, b, c. Make sure to choose the correct device name, because data on this device will be replaced.
- If the Linux host machine supports read/write SD card directly without an extra SD card reader device, the device name of SD card is typically mmcblk0.

4. Unplug removable storage device from the Linux host and plug into the reference board.
5. Make sure the DIP switch settings on the board are correct to boot from the desired boot medium.
6. Power-on the board. The system automatically boots up to the LSDK distro.
   - Use the following default credentials to log onto to the LSDK distro:
     - root/root, or
     - user/user

To automatically download and deploy LSDK images directly to the target storage drive on a board:

1. Plug the storage device into the reference board.
2. Check DIP switch settings for the desired boot type.
3. Power-on the board and execute the following command under U-boot prompt to boot the board to TinyDistro. TinyDistro is a non-customizable prebuilt ramdisk rootfs deployed in flash media on the reference board which can be used to execute the flex-installer commands. This rootfs fits into the firmware image on flash and is therefore called tiny.
   - For SD boot:

```
=> run sd_bootcmd
```

   - For QSPI NOR boot:

```
=> run qspi_bootcmd
```

4. Login to TinyDistro as “root” and bring up a network interface.

   Dynamic IP address assignment:

```
$ udhcpc -i <port name in TinyDistro>
```

Static IP address assignment:

```
$ ifconfig <port name in TinyDistro> <IP address> netmask <netmask address> up
```

The port name in Linux TinyDistro corresponding to each of the ports on the reference board chassis is given in section LS1088ARDB and LS1088ARDB-PB reference information

5. Download `flex-installer` to deploy LSDK images.

```
$ wget https://www.nxp.com/lgfiles/sdk/lsdk2004-update-290520/flex-installer && chmod +x flex-installer && sudo mv flex-installer /usr/bin
```

6. Execute the following flex-installer command to automatically install LSDK default `rootfs_lsdk2004_LS_arm64_main.tgz` and `bootpartition_LS_arm64_lts_4.19.tgz`.

```
$ flex-installer -i auto -m ls1088ardb_pb -d <device>
```

NOTE

- Use the command `cat /proc/partitions` to see a list of devices and their sizes to make sure that the correct device names have been chosen.
- The SD/USB/SATA storage drive in the Linux PC is detected as /dev/sdX, where X is a letter such as a, b, c. Make sure to choose the correct device name, because data on this device will be replaced.
- If the Linux host machine supports read/write SD card directly without an extra SD card reader device, the device name of SD card is typically mmcblk0.

7. Power-on the board. The system automatically boots up to the LSDK distro.
   - Use the following default credentials to log onto to the LSDK distro:
     - root/root, or
     - user/user

4.1.11.6 Bringing up DPAA2 network interfaces

This section describes the procedure to bring up DPAA2 network interfaces.

4.1.11.6.1 Use Linux commands to list network interfaces

The Linux distribution boots with a default DPL file which enables only one network interface on DPAA2 by default, as a standard kernel Ethernet interface.

Run the following standard Linux command to get a list of enabled interfaces.

```
$ ip link show
```

The default interface is named eth0 (or eth1 if a PCI Express network interface card is discovered first).

4.1.11.6.2 Use restool wrapper scripts to list DPAA2 objects

User-friendly wrapper scripts are provided in the release rootfs to assist with dynamic creation of DPNIs and associated dependencies. The wrapper scripts call restool commands. Enter the following command for a list of the available wrapper scripts:

```
$ls-main
```

The Ethernet interfaces have corresponding DPPA2 objects associated with them.

Run the following restool wrapper script to list the enabled data path network interface (DPNI) associated with eth0 (or eth1).

```
$ ls-listni
dprc.1/dpni.0 (interface: eth1, end point: dpmac.5)
```

This indicates that the data path network interface named dpni.0 which belongs to the DPAA2 resource container dprc.1 is present. This DPNI object corresponds to the interface named eth1 which is connected to dpmac.5.

The following command can be used to list all DPMAC objects present in the system and what they are connected to (if anything).

```
$ ls-listmac
    dprc.1/dpmac.10
    dprc.1/dpmac.9
    dprc.1/dpmac.8
    dprc.1/dpmac.7
    dprc.1/dpmac.6
    dprc.1/dpmac.5 (end point: dpni.0)
    dprc.1/dpmac.4
    dprc.1/dpmac.3
    dprc.1/dpmac.2
    dprc.1/dpmac.1
```

For more information on DPAA2 objects and restool, see DPAA2-specific Software in LSDK documentation.

4.1.11.6.3 Add and destroy network interfaces

As mentioned in previous sections, interface eth0 (or eth1) corresponds to the data path network interface dpni.0 which is the only one enabled by default DPL file. However, users may need more than one network interface enabled. Also, DPNI.0 is configured with a minimal set of resources – e.g. it can only receive traffic on one core via one queue. Additional and fully featured DPNI objects can be created using restool. Once these objects are created, the configuration can be saved to a custom DPL file.

Running the command below is the simplest way of adding a DPNI object and connecting it to a DPMAC. In this case DPNI object is being connected to dpmac.4 using default options and arguments.

```
$ ls-addni dpmac.4
Created interface: eth0 (object:dpni.1, endpoint: dpmac.4)
```

Run the following command to display information about the newly created dpni.1 interface. The number of queues is shown to be 8, one queue per core for 8 cores which can receive traffic.

```
restool dpni info dpni.1
```

If a user wants to connect DPMAC5 (which is connected to dpni.0 by default) to a fully featured data path network interface, the user will first need to unbind and destroy the existing interface by using the commands below.

Unbind dpni.0 from the driver

```
$ echo dpni.0 > /sys/bus/fsl-mc/drivers/fsl_dpaa2_eth/unbind
```

Destroy data path network interface dpni.0

```
$ restool dpni destroy dpni.0
dpni.0 is destroyed
```

Now add back dpmac.5 using the command below. Even though dpmac.5 is again connected to dpni.0, dpni.0 now uses 8 traffic queues for distribution.

```
$ ls-addni dpmac.5
Created interface: eth0 (object:dpni.0, endpoint: dpmac.5)
```

NOTE

Note that on the LS1088A SoC using the ls-addni script default resource allocation will not be possible to create and connect DPNIs to all the 10 DPMACs available. This is because, by default, the ls-addni script creates an interface with 64 flow steering entries and 16 MAC entries. Since the LS1088A SoC has a total of 2K CTLU entries (resources used by the fs_entries and mac_entries parameters), resources will be easily occupied and the 10th DPNI will not be created. This limitation is not encountered on any of the other DPAA2 based SoCs (LS2088A or LX2160A) since the CTLU resources are not scarce.

A sequence for creating all 10 interfaces without any error would be the one below.

```
for i in `seq 1 9`; do ls-addni "dpmac.$i"; done

# for the 10th interface use a lower number of pre-allocated resources (steering entries and
mac entries)

ls-addni dpmac.10 -f=16 -m=8
```

A detailed example of how one can compute the CTLU resource allocation can be found below.

A classification key, depending on its size can stretch on multiple CTLU entries. For example a 56 byte key (this is the key size for exact match flow steering entries) will occupy 3 entries. By default when a interface is created with ls-addni, 64 fs_entries are preallocated. This means that a total of 64 * 3 = 192 entries are used for one DPNI. For 10 dpnis there will be 10 times more, that is 1920 entries. Another default parameter that consumes CTLU resources is mac_entries. A mac_entry key consumes 1 CTLU entry. The default 16 MAC entries will consume 16 CTLU entries. For 10 DPNIs 160 CTLU entries will be consumed. If we sum up the above numbers we obtain a total of 2080 entries for 10 DPNIs, more than the maximum 2K.

4.1.11.6.4 Save configuration to a custom DPL file (Optional)

Once the additional DPNI objects are created, a custom DPL file can be generated using the following command. This DPL file has a .dts format and is created on the reference board.

```
$ restool dprc generate-dpl dprc.1 > <file_name>.dts
```

The resulting .dts file must be compiled using the dtc tool to generate a .dtb file.

Copy this file to a Linux host machine or server using SCP and run the following command to convert it to a .dtb file.

```
$ dtc -I dts -O dtb <file_name>.dts -o <file_name>.dtb
```

The newly created DPL file can be flashed onto the board and used to boot to Linux.

4.1.11.6.5 Assign IP addresses to network interfaces

Static IP addresses can be assigned to network interfaces using the standard ifconfig or ip commands.

```
ifconfig <interface_name_in_Linux> <ip_address>
OR
ip address add <ip_address> dev <interface_name_in_linux>
```

Alternatively, Static IP addresses can also be assigned using netplan. Create a file called “config.yaml” in /etc/netplan. Using a text editor, add the following lines to this config file and save it.

```
network:
  version: 2
  renderer: networkd
  ethernets:
    <interface_name_in_Linux>:
      addresses:
        - <ip_address>/24
```

After saving this file, run the following command to apply this netplan configuration and then reboot the board.

```
sudo netplan apply
```

Once the board reboots, bring up the desired interface by using "`ifconfig <interface_name_in_Linux>` up" or " `ip link set <interface_name_in_Linux> up`" command. The interface will be assigned the IP address that was entered in the " `config.yaml`" file.Netplan can also be used for dynamic IP address assignment using DHCP. For dynamic IP assignment, replace the contents of the config.yaml file with the following.

```
network:
  version: 2
  renderer: networkd
  ethernets:
    <interface_name_in_Linux>:
      dhcp4: true
```

Follow the same procedure as for the static IP assignment using Netplan after saving the "`config.yaml`" file.

4.1.12 LSDK Quick Start Guide for LS2088ARDB

4.1.12.1 Introduction

The following sections describe the procedure to program LSDK composite firmware for LS2088ARDB, and the most common use case procedure to automatically download and deploy LSDK default images to LS2088ARDB using flex-installer. For other optional/special use case examples, see Download and deploy LSDK images with flex-installer in Linux environment.

For more information on the different components of the board and on how to configure and boot the board, see QorIQ LS2088A Reference Design Board Getting Started Guide.

4.1.12.2 LS2088ARDB reference information

This section provides general information about LS2088ARDB which may come in handy as a reference while completing steps for deploying LSDK that follow.

Ethernet port map

Port name in Chassis	Port name in U-Boot	Port name in Linux (tinyDistro and Ubuntu userland)	Description
ETH0	DPMAC5@xgmii	eth0 by default (or eth1 if PCI Express network interface card is discovered first)	XFI copper interface
ETH1	DPMAC6@xgmii	not enabled by default	XFI copper interface
ETH2	DPMAC7@xgmii	not enabled by default	XFI copper interface
ETH3	DPMAC8@xgmii	not enabled by default	XFI copper interface
ETH4	DPMAC1@xgmii	not enabled by default	XFI copper interface
ETH5	DPMAC2@xgmii	not enabled by default	XFI copper interface
ETH6	DPMAC3@xgmii	not enabled by default	XFI copper interface
ETH7	DPMAC4@xgmii	not enabled by default	XFI copper interface

System memory map

Start address	End address	Size	Allocation	Comment
0x0000_0000_0000	0x0000_000F_FFFF	1MB	CCSR - Boot ROM	64KB
0x0000_0010_0000	0x0000_00FF_FFFF	15MB	Reserved	
0x0000_0100_0000	0x0000_0FFF_FFFF	240MB	CCSR	
0x0000_1000_0000	0x0000_10FF_FFFF	16MB	Reserved	
0x0000_1100_0000	0x0000_11FF_FFFF	16MB	Reserved	
0x0000_1200_0000	0x0000_13FF_FFFF	32MB	Reserved	
0x0000_1400_0000	0x0000_17FF_FFFF	64MB	Reserved	
0x0000_1800_0000	0x0000_181F_FFFF	2MB	OCRAM	128KB
0x0000_1820_0000	0x0000_18FF_FFFF	14MB	Reserved	
0x0000_1900_0000	0x0000_19FF_FFFF	16MB	CoreSight STM	16MB
0x0000_1A00_0000	0x0000_1BFF_FFFF	32MB	Reserved	
0x0000_1C00_0000	0x0000_1CFF_FFFF	16MB	Reserved	
0x0000_1D00_0000	0x0000_1FFF_FFFF	48MB	Reserved	
0x0000_2000_0000	0x0000_2FFF_FFFF	256MB	Quad SPI Region #1 (0-256MB)	More QSPI space below 256MB
0x0000_3000_0000	0x0000_3FFF_FFFF	256MB	IFC Region #1 (0-256MB)	More IFC space below 256MB
0x0000_4000_0000	0x0000_5FFF_FFFF	512MB	Reserved	
0x0000_6000_0000	0x0000_7FFF_FFFF	512MB	Reserved	
0x0000_8000_0000	0x0000_9FFF_FFFF	512MB	GPP DRAM Region #1 (0-2GB)	
0c0000_A000_0000	0x0000_BFFF_FFFF	512MB		
0x0000_C000_0000	0x0000_DFFF_FFFF	512MB		
0x0000_E000_0000	0x0000_FFFF_FFFF	512MB		
0x0001_0000_0000	0x0001_FFFF_FFFF	4GB	Reserved	
0x0002_0000_0000	0x0003_FFFF_FFFF	8GB		
0x0004_0000_0000	0x0004_0FFF_FFFF	256MB	Hole	QSPI space #1 maps on top of this space
0x0004_1000_0000	0x0004_FFFF_FFFF	3.75GB	Quad SPI Region #2 (256MB-4GB)	3.75GB
0x0005_0000_0000	0x0005_0FFF_FFFF	256MB	Hole	IFC space #1 maps on top of this space
0x0005_1000_0000	0x0005_FFFF_FFFF	3.75GB	IFC Region #2 (256MB-4GB)	3.75GB

Table continues on the next page...

Table continued from the previous page...

Start address	End address	Size	Allocation	Comment
0x0006_0000_0000	0x0006_FFFF_FFFF	4GB	Reserved	
0x0007_0000_0000	0x0007_3FFF_FFFF	1GB	DCSR	
0x0007_4000_0000	0x0007_FFFF_FFFF	3GB	Reserved	
			DPAA2 Portal Map	
0x0008_0000_0000	0x0008_03FF_FFFF	64MB	Reserved	
0x0008_0400_0000	0x0008_07FF_FFFF	64MB	Reserved	
0x0008_0800_0000	0x0008_0BFF_FFFF	64MB	Reserved	
0x0008_0C00_0000	0x0008_0FFF_FFFF	64MB	MC - 1024 portals	32MB (512 portal)
0x0008_1000_0000	0x0008_17FF_FFFF	128MB	Reserved	
0x0008_1800_0000	0x0008_1FFF_FFFF	128MB	QBMAN portals	128MB
0x0008_0000_0000	0x000B_FFFF_FFFF	15.5GB	Reserved	
0x000C_0000_0000	0x000F_FFFF_FFFF	16GB	Reserved	
			High-speed I/O (PCIe)	See details of specific IPs below
0x0010_0000_0000	0x0011_FFFF_FFFF	8GB	Reserved	
0x0012_0000_0000	0x0013_FFFF_FFFF	8GB	Reserved	
0x0014_0000_0000	0x0015_FFFF_FFFF	8GB	Reserved	
0x0016_0000_0000	0x0017_FFFF_FFFF	8GB	Reserved	
0x0018_0000_0000	0x0019_FFFF_FFFF	8GB	Reserved	
0x001A_0000_0000	0x001B_FFFF_FFFF	8GB	Reserved	
0x001C_0000_0000	0x001D_FFFF_FFFF	8GB	Reserved	
0x001E_0000_0000	0x001F_FFFF_FFFF	8GB	Reserved	
0x0020_0000_0000	0x0027_FFFF_FFFF	32GB	PCIe1	
0x0028_0000_0000	0x002F_FFFF_FFFF	32GB	PCIe2	
0x0030_0000_0000	0x0037_FFFF_FFFF	32GB	PCIe3	
0x0038_0000_0000	0x003F_FFFF_FFFF	32GB	PCIe4	
			DPAA2 Ext address map	
0x0040_0000_0000	0x0040_FFFF_FFFF	4GB	Reserved	
0x0041_0000_0000	0x0041_FFFF_FFFF	4GB	Reserved	
0x0042_0000_0000	0x0042_FFFF_FFFF	4GB	Reserved	
0x0043_0000_0000	0x0043_FFFF_FFFF	4GB	WRIOP access window	
0x0044_0000_0000	0x0047_FFFF_FFFF	16GB	Reserved	

Table continues on the next page...

Table continued from the previous page...

Start address	End address	Size	Allocation	Comment
0x0048_0000_0000	0x0048_FFFF_FFFF	4GB	Reserved	
0x0049_0000_0000	0x0049_FFFF_FFFF	4GB	Reserved	
0x004A_0000_0000	0x004A_FFFF_FFFF	4GB	Reserved	
0x004B_0000_0000	0x004B_FFFF_FFFF	4GB	AIOP access windowReserved	
0x004C_0000_0000	0x004F_FFFF_FFFF	16GB	Packet express buffer	4MB
0x0050_0000_0000	0x005F_FFFF_FFFF	64GB	Reserved	
0x0060_0000_0000	0x007F_FFFF_FFFF	128GB	DPAA2 DRAM	
0x0080_0000_0000	0x0080_7FFF_FFF	2GB	Hole	
0x0080_8000_0000	0x00FF_FFFF_FFFF	510GB	GPP DRAM Region #2 (2-512GB)	

Supported boot options

LS2088ARDB supports the following boot options:

- Parallel NOR flash (referred to as "NOR" or "NOR flash" in the following sections)
- QSPI NOR flash (only available on RDB Rev E and later)

On-board switch options

The RDBs have user selectable switches for evaluating different boot options for the LS2088A device as given in the table below ('0' is OFF, '1' is ON).

Boot source	SW5[1:8]	SW3[1:8]	SW4[1:8]	SW6[1:8]	SW7[1:8]	SW9[1:8]	SW8[1:8]
NOR flash bank0 (default)	1111 1111	0001 0010	1111 1111	1111 1111	0100 0010	0100 0000	0111 1111
NOR flash bank4	1111 1111	0001 0010	1111 1111	1111 1111	0100 0010	0110 0000	0111 1111
QSPI NOR flash	1111 1111	0011 0001	0111 1111	1111 1111	0100 1010	0100 0000	0111 1111

Note that changing the boot device configuration from the default setting may require additional changes in the RCW or in other code images. For information on RCW naming convention for LS2088ARDB see https://source.codeaurora.org/external/qoriq/qoriq-components/rcw/tree/ls2088ardb/README?h=github.com.qoriq-os/integration.

In addition to the above switch settings, make sure the following jumper settings are correct based on the preferred type of boot (for RDB Rev E and later).

Jumper	Settings
J8	For QSPI-boot, via on-board qspi flash: 1-2

Table continues on the next page...

Table continued from the previous page...	
Jumper	**Settings**
	For QSPI-boot, via qspi emulator: 2-3
J14	For NOR-boot: 1-2 For QSPI-boot: 2-3

NOR Flash Banks

LS2088ARDB provides a special feature that allows a single NOR flash to be divided into multiple parts called “banks”. This is done by board-level logic that modifies address signals. As there is only one NOR flash physically, the banks are sometimes called "virtual" banks. The benefit of this feature is that it allows more than one set of images to be independently deployed to one NOR flash. This is very helpful during development because the U-Boot image in one bank can be used to program an image set into a different bank. If the new images are flawed, the old images are still functional. The logic on the board usually allows the NOR flash to be divided into up to 8 banks, but the NOR flash on LS2088ARDB is divided into two halves. The halves are called bank 0 and bank 4. Bank switching can be done in in software using qixis_reset commands. To determine the current bank, refer to the example U-Boot log given below.

```
NOTICE:  UDIMM 18ASF1G72AZ-2G3B1

NOTICE:  16 GB DDR4, 64-bit, CL=13, ECC on, 256B, CS0+CS1
NOTICE:  UDIMM 18ASF1G72AZ-2G3B1

NOTICE:  4 GB DDR4, 32-bit, CL=11, ECC on, CS0+CS1
NOTICE:  BL2: v1.5(release):lsdk18_12_ear1-11-g81b4323f
NOTICE:  BL2: Built : 16:28:09, Nov 30 2018
NOTICE:  BL31: v1.5(release):lsdk18_12_ear1-11-g81b4323f
NOTICE:  BL31: Built : 16:28:24, Nov 30 2018
NOTICE:  Welcome to LS2088 BL31 Phase


U-Boot 2018.09-09790-gee0946537f (Nov 29 2018 - 21:21:15 +0800)

SoC:  LS2088AE Rev1.1 (0x87090011)
Clock Configuration:
       CPU0(A72):1800 MHz  CPU1(A72):1800 MHz  CPU2(A72):1800 MHz
       CPU3(A72):1800 MHz  CPU4(A72):1800 MHz  CPU5(A72):1800 MHz
       CPU6(A72):1800 MHz  CPU7(A72):1800 MHz
       Bus:      700  MHz  DDR:      1866.667 MT/s     DP-DDR:   1600 MT/s
Reset Configuration Word (RCW):
       00000000: 483038b8 48480048 00000000 00000000
       00000010: 00000000 00000000 00a00000 00000000
       00000020: 01601180 00002581 00000000 00000000
       00000030: 00400c0b 00000000 00000000 00000000
       00000040: 00000000 00000000 00000000 00000000
       00000050: 00000000 00000000 00000000 00000000
       00000060: 00000000 00000000 00027000 00000000
       00000070: 412a0000 00040000
Model: Freescale Layerscape 2080a RDB Board
Board: LS2088AE Rev1.1-RDB, Board Arch: V1, Board version: F, boot from vBank: 4
FPGA: v1.22
SERDES1 Reference : Clock1 = 156.25MHz Clock2 = 156.25MHz
SERDES2 Reference : Clock1 = 100MHz Clock2 = 100MHz
I2C:   ready
DRAM:  15.9 GiB
DDR    15.9 GiB (DDR4, 64-bit, CL=13, ECC on)
```

```
       DDR Controller Interleaving Mode: 256B
       DDR Chip-Select Interleaving Mode: CS0+CS1
SEC0: RNG instantiated
SEC0: RNG instantiated
Using SERDES1 Protocol: 42 (0x2a)
Using SERDES2 Protocol: 65 (0x41)
Flash: 128 MiB
NAND:  2048 MiB
MMC:   FSL_SDHC: 0
Loading Environment from Flash... OK
EEPROM: Invalid ID (ff ff ff ff)
In:    serial
Out:   serial
Err:   serial
VID: Core voltage after adjustment is at 1000 mV
Net:   DPMAC5@xgmii: system interface XFI
DPMAC5@xgmii: Aquantia AQR405 Firmware Version 2.3.5
DPMAC6@xgmii: system interface XFI
DPMAC6@xgmii: Aquantia AQR405 Firmware Version 2.3.5
DPMAC7@xgmii: system interface XFI
DPMAC7@xgmii: Aquantia AQR405 Firmware Version 2.3.5
DPMAC8@xgmii: system interface XFI
DPMAC8@xgmii: Aquantia AQR405 Firmware Version 2.3.5
PCIe0: pcie@3400000 disabled
PCIe1: pcie@3500000 disabled
PCIe2: pcie@3600000 Root Complex: x1 gen1
PCIe3: pcie@3700000 Root Complex: no link
e1000: 68:05:ca:44:5f:8a
       DPMAC1@xgmii, DPMAC2@xgmii, DPMAC3@xgmii, DPMAC4@xgmii, DPMAC5@xgmii, DPMAC6@xgmii,
DPMAC7@xgmii, DPMAC8@xgmii, e1000#0 [PRIME]
Warning: e1000#0 MAC addresses don't match:
Address in SROM is         68:05:ca:44:5f:8a
Address in environment is  00:e0:0c:00:7c:08

=>
```

Bank switching in NOR flash can be performed in U-Boot using the following statements.

- Boot from default bank (according to switch settings):

```
=>qixis_reset
```

- Switch to alternate bank:

```
=>qixis_reset altbank
```

NOTE

Boot option switching between parallel NOR boot and QSPI NOR boot cannot be performed using commands. Boot option switching can be done by adjusting DIP switch settings and jumper settings on the Reference Design Board as given above.

U-Boot Environment Variables

- DPAA2-specific Environment Variables
  - **mcmemsize:** Defines amount of system DDR to be used by the Management Complex. If this variable is not defined, the compile-time CONFIG_SYS_LS_MC_DRAM_BLOCK_MIN_SIZE will be the default. Normally, users do not need to set this variable because the default is acceptable.

- Environment variables that are not specific to DPAA2
  - bootcmd: Contains commands that are automatically executed when the U-Boot boot command is run. This happens automatically when the user does not interrupt U-Boot's initial count down. In normal usage, bootcmd should contain the command to apply the Management Complex Data Path Layout (DPL) file because this must be done before booting Linux. When booting from NOR, When booting from NOR, the default bootcmd is `bootcmd=env exists mcinitcmd && env exists secureboot && esbc_validate 0x580780000; env exists mcinitcmd && fsl_mc lazyapply dpl 0x580d00000;run distro_bootcmd;run nor_bootcmd; env exists secureboot && esbc_halt;`

For more information on U-Boot distro boot command, see “LSDK U-Boot uses distro boot feature” in LSDK documentation.

4.1.12.3 LS2088ARDB recovery information

If LS2088ARDB board fails to boot from NOR bank 0, you can recover NOR bank 0 from NOR bank 4 by following these steps:

1. Download the prebuilt composite firmware image:

```
$ wget http://www.nxp.com/lgfiles/sdk/lsdk2004/firmware_ls2088ardb_uboot_norboot.img
```

2. Boot LS2088ARDB from NOR bank 4 with the following switch settings:
   - SW5[1:8] = 1111 1111
   - SW3[1:8] = 0001 0010
   - SW4[1:8] = 1111 1111
   - SW6[1:8] = 1111 1111
   - SW7[1:8] = 0100 0010
   - SW9[1:8] = 0110 0000
   - SW8[1:8] = 0111 1111
3. Program NOR bank 0 from NOR bank 4:

```
=> tftp $load_addr firmware_ls2088ardb_uboot_norboot.img
=> protect off 584000000 +$filesize && erase 584000000 +$filesize && cp.b $load_addr 584000000
$filesize
```

4. Reset and boot the board from NOR bank 0:

```
=> qixis_reset
```

NOTE

If LS2088ARDB fails to boot from both the NOR banks, you need to recover the board using **CodeWarrior Development Studio for QorIQ LS series - ARM V8 ISA**. For steps to recover the board using the CodeWarrior tool, see section "*8.6 Board Recovery*" in ARM V8 ISA, Targeting Manual

4.1.12.4 Program LSDK composite firmware image

This topic explains steps to program NOR firmware image to IFC NOR flash on LS2088ARDB and QSPI firmware image to QSPI NOR flash on LS2088ARDB.

To program LSDK composite NOR firmware image to IFC NOR flash on LS2088ARDB:

1. Download the NOR firmware (from NXP website) to the Linux host machine.

```
$ wget https://www.nxp.com/lgfiles/sdk/lsdk2004/firmware_ls2088ardb_uboot_norboot.img
```

2. Make sure the DIP switch and jumper settings on the board are for IFC NOR flash. (Refer to " LS2088ARDB reference information" for switch and jumper settings.)
3. Reboot the board from NOR flash bank 0 and stop autoboot to enter U-Boot prompt.
4. Under U-Boot, download the firmware to the reference board using one of the following options:
   - Load firmware from the TFTP server

     ```
     => tftp $load_addr firmware_ls2088ardb_uboot_norboot.img
     ```

   - Load firmware image from partition on mass storage device (SD, USB, or SATA)

     ```
     => load mmc <device:partition> $load_addr firmware_ls2088ardb_uboot_norboot.img
     ```

     For example:

     ```
     => load mmc 0:2 $load_addr firmware_ls2088ardb_uboot_norboot.img
     ```

     Or

     ```
     => load usb <device:partition> $load_addr firmware_ls2088ardb_uboot_norboot.img
     ```

     Or

     ```
     => load scsi <device:partition> $load_addr firmware_ls2088ardb_uboot_norboot.img
     ```

     NOTE

     Use the following command if the SD card is formatted/created using LSDK flex-installer command:

     ```
     => load <interface> [<dev[:part]> [<addr> [<filename> [bytes [pos]]]]]
     ```

     For example:

     ```
     => load mmc 0:2 $load_addr firmware_ls2088ardb_uboot_norboot.img
     ```

     Use the following command if the SD card is formatted/created on a Windows PC:

     ```
     => fatload <interface> [<dev[:part]> [<addr> [<filename> [bytes [pos]]]]]
     ```

     For example:

     ```
     => fatload mmc 0:2 $load_addr firmware_ls2088ardb_uboot_norboot.img
     ```

     Use the following command if the SD card is formatted/created on a Linux PC:

     ```
     => ext2load <interface> [<dev[:part]> [<addr> [<filename> [bytes [pos]]]]]
     ```

     For example:

     ```
     => ext2load mmc 0:2 $load_addr firmware_ls2088ardb_uboot_norboot.img
     ```

     Also note that LSDK flex-installer command puts the images on the IInd partition, so `0:2` is used in the `load` command. If the SD card is formatted on Windows PC or Linux PC for single partition only, then `0` should be used instead of `0:2` in the `fatload`/`ext2load` command.

5. Program the composite firmware into IFC NOR flash.

- To program alternate bank:

```
=> protect off 584000000 +$filesize && erase 584000000 +$filesize && cp.b a0000000 584000000
$filesize
```

- To program current bank:

```
=> protect off 580000000 +$filesize && erase 580000000 +$filesize && cp.b a0000000 580000000
$filesize
```

6. Reset and boot the board from IFC NOR flash. The system will automatically boot up TinyDistro (login using root/root) or LSDK distro (login using root/root or user/user) available on the removable storage device.
   - To boot from NOR flash bank 0.

```
=> qixis_reset
```

   - To boot from NOR flash bank 4.

```
=> qixis_reset altbank
```

To program LSDK composite firmware image in QSPI NOR flash on LS2088ARDB:

1. Download the firmware (from NXP website) to the Linux host machine.

```
$ wget https://www.nxp.com/lgfiles/sdk/lsdk2004/firmware_ls2088ardb_uboot_qspiboot.img
```

2. Make sure the DIP switch and jumper settings on the board are for QSPI NOR flash. (Refer to " LS2088ARDB reference information" for switch and jumper settings.)
3. Under U-Boot, download the firmware to the reference board using one of the following options:
   - Load firmware from the TFTP server

```
=> tftp $load_addr firmware_ls2088ardb_uboot_qspiboot.img
```

   - Load firmware image from partition on mass storage device (SD, USB, or SATA)

```
=> load mmc <device:partition> $load_addr firmware_ls2088ardb_uboot_qspiboot.img
```

     For example:

```
=> load mmc 0:2 $load_addr firmware_ls2088ardb_uboot_qspiboot.img
```

     Or

```
=> load usb <device:partition> $load_addr firmware_ls2088ardb_uboot_qspiboot.img
```

     Or

```
=> load scsi <device:partition> $load_addr firmware_ls2088ardb_uboot_qspiboot.img
```

NOTE

Use the following command if the SD card is formatted/created using LSDK flex-installer command:

```
=> load <interface> [<dev[:part]> [<addr> [<filename> [bytes [pos]]]]]
```

For example:

```
=> load mmc 0:2 $load_addr firmware_ls2088ardb_uboot_qspiboot.img
```

Use the following command if the SD card is formatted/created on a Windows PC:

```
=> fatload <interface> [<dev[:part]> [<addr> [<filename> [bytes [pos]]]]]
```

For example:

```
=> fatload mmc 0:2 $load_addr firmware_ls2088ardb_uboot_qspiboot.img
```

Use the following command if the SD card is formatted/created on a Linux PC:

```
=> ext2load <interface> [<dev[:part]> [<addr> [<filename> [bytes [pos]]]]]
```

For example:

```
=> ext2load mmc 0:2 $load_addr firmware_ls2088ardb_uboot_qspiboot.img
```

Also note that LSDK flex-installer command puts the images on the IInd partition, so `0:2` is used in the `load` command. If the SD card is formatted on Windows PC or Linux PC for single partition only, then `0` should be used instead of `0:2` in the `fatload`/`ext2load` command.

4. Program the firmware to QSPI NOR flash.

```
=> sf probe 0:0
=> sf erase 0 +$filesize && sf write $load_addr 0 $filesize
```

5. Reset the board. The system will automatically boot up TinyDistro (login using root/root) or LSDK distro (login using root/root or user/user) available on the removable storage device.

```
=> reset
```

4.1.12.5 Automatically download and deploy LSDK images

To automatically download and deploy LSDK images to a board using a removable storage device which can be connected to a local Linux host machine:

1. Connect the removable storage device to the Linux host machine.
2. Download `flex-installer` to deploy LSDK images.

```
$ wget https://www.nxp.com/lgfiles/sdk/lsdk2004-update-290520/flex-installer && chmod +x flex-
installer && sudo mv flex-installer /usr/bin
```

3. Execute the following flex-installer command to automatically install LSDK default `rootfs_lsdk2004_LS_arm64_main.tgz` and `bootpartition_LS_arm64_lts_4.19.tgz`.

```
$ flex-installer -i auto -m ls2088ardb -d <device>
```

NOTE

- Use the command `cat /proc/partitions` to see a list of devices and their sizes to make sure that the correct device names have been chosen.
- The SD/USB/SATA storage drive in the Linux PC is detected as /dev/sdX, where X is a letter such as a, b, c. Make sure to choose the correct device name, because data on this device will be replaced.
- If the Linux host machine supports read/write SD card directly without an extra SD card reader device, the device name of SD card is typically mmcblk0.

4. Unplug removable storage device from the Linux host and plug into the reference board.
5. Make sure the DIP switch and jumper settings on the board are correct to boot from the desired boot medium.
6. Power-on the board. The system automatically boots up to the LSDK distro.
   - Use the following default credentials to log onto to the LSDK distro:
     — root/root, or
     — user/user

To automatically download and deploy LSDK images directly to the target storage drive on a board:

1. Plug the storage device into the reference board.
2. Check DIP switch and jumper settings for the desired boot type.
3. Power-on the board and execute the following command under U-boot prompt to boot the board to TinyDistro. TinyDistro is a non-customizable prebuilt ramdisk rootfs deployed in flash media on the reference board which can be used to execute the flex-installer commands. This rootfs fits into the firmware image on flash and is therefore called tiny.
   - For IFC NOR boot:

     ```
     => run nor_bootcmd
     ```

   - For QSPI NOR boot:

     ```
     => run qspi_bootcmd
     ```

4. Login to TinyDistro as “root” and bring up a network interface.

   Dynamic IP address assignment:

   ```
   $ udhcpc -i <port name in TinyDistro>
   ```

   Static IP address assignment:

   ```
   $ ifconfig <port name in TinyDistro> <IP address> netmask <netmask address> up
   ```

   The port name in Linux TinyDistro corresponding to each of the ports on the reference board chassis is given in section LS2088ARDB reference information

5. Download `flex-installer` to deploy LSDK images.

   ```
   $ wget https://www.nxp.com/lgfiles/sdk/lsdk2004-update-290520/flex-installer && chmod +x flex-installer && sudo mv flex-installer /usr/bin
   ```

6. Execute the following flex-installer command to automatically install LSDK default `rootfs_lsdk2004_LS_arm64_main.tgz` and `bootpartition_LS_arm64_lts_4.19.tgz`.

   ```
   $ flex-installer -i auto -m ls2088ardb -d <device>
   ```

NOTE

- Use the command `cat /proc/partitions` to see a list of devices and their sizes to make sure that the correct device names have been chosen.
- The SD/USB/SATA storage drive in the Linux PC is detected as /dev/sdX, where X is a letter such as a, b, c. Make sure to choose the correct device name, because data on this device will be replaced.
- If the Linux host machine supports read/write SD card directly without an extra SD card reader device, the device name of SD card is typically mmcblk0.

7. Power-on the board. The system automatically boots up to the LSDK distro.
   - Use the following default credentials to log onto to the LSDK distro:
     — root/root, or
     — user/user

4.1.12.6 Bringing up DPAA2 network interfaces

This section describes the procedure to bring up DPAA2 network interfaces.

4.1.12.6.1 Use Linux commands to list network interfaces

The Linux distribution boots with a default DPL file which enables only one network interface on DPAA2 by default as a standard kernel Ethernet interface. Run the following standard Linux command to get a list of enabled interfaces.

```
$ ip link show
```

The default interface is named eth0 (or eth1 if a PCI Express network interface card is discovered first).

4.1.12.6.2 Use restool wrapper scripts to list DPAA2 objects

User-friendly wrapper scripts are provided in the release rootfs to assist with dynamic creation of DPNIs and associated dependencies. The wrapper scripts call restool commands.

Enter the following command for a list of the available wrapper scripts:

```
$ls-main
```

The Ethernet interfaces have corresponding DPPA2 objects associated with them. Run the following restool wrapper script to list the enabled data path network interface (DPNI) associated with eth0 (or eth1).

```
$ ls-listni
dprc.1/dpni.0 (interface: eth1, end point: dpmac.5)
```

This indicates that the data path network interface named dpni.0 which belongs to the DPAA2 resource container dprc.1 is present. This DPNI object corresponds to the interface named eth1 which is connected to dpmac.5.

The following command can be used to list all DPMAC objects present in the system and what they are connected to (if anything).

```
$ ls-listmac
    dprc.1/dpmac.8
    dprc.1/dpmac.7
    dprc.1/dpmac.6
    dprc.1/dpmac.5 (end point: dpni.0)
    dprc.1/dpmac.4
    dprc.1/dpmac.3
    dprc.1/dpmac.2
    dprc.1/dpmac.1
```

For more information on DPAA2 objects and restool, see DPAA2-specific Software in LSDK documentation.

4.1.12.6.3 Add and destroy network interfaces

As mentioned in previous sections, interface eth0 (or eth1) corresponds to the data path network interface dpni.0 which is the only one enabled by default DPL file. However, users may need more than one network interface enabled. Also, DPNI.0 is configured with a minimal set of resources – e.g. it can only receive traffic on one core via one queue. Additional and fully featured DPNI objects can be created using restool. Once these objects are created, the configuration can be saved to a custom DPL file.

Running the command below is the simplest way of adding a DPNI object and connecting it to a DPMAC. In this example DPNI object is being connected to dpmac.4 using default options and arguments.

```
$ ls-addni dpmac.4
Created interface: eth0 (object:dpni.1, endpoint: dpmac.4)
```

Run the following command to display information about the newly created dpni.1 interface. The number of queues is shown to be 8, one queue per core for 8 cores which can receive traffic.

```
restool dpni info dpni.1
```

If a user wants to connect DPMAC5 (which is connected to dpni.0 by default) to a fully featured data path network interface, the user will first need to unbind and destroy the existing interface by using the commands below.

Unbind dpni.0 from the driver

```
$ echo dpni.0 > /sys/bus/fsl-mc/drivers/fsl_dpaa2_eth/unbind
```

Destroy data path network interface dpni.0

```
$ restool dpni destroy dpni.0
dpni.0 is destroyed
```

Now add back dpmac.5 using the command below. Even though dpmac.5 is again connected to dpni.0, dpni.0 now uses 8 queues for traffic distribution.

```
$ ls-addni dpmac.5
Created interface: eth0 (object:dpni.0, endpoint: dpmac.5)
```

4.1.12.6.4 Save configuration to a custom DPL file (Optional)

Once the additional DPNI objects are created, a custom DPL file can be generated using the following command. This DPL file has a .dts format and is created on the reference board.

```
$ restool dprc generate-dpl dprc.1 > <file_name>.dts
```

The resulting .dts file must be compiled using the dtc tool to generate a .dtb file. Copy this file to a Linux host machine or server using SCP and run the following command to convert it to a .dtb file.

```
$ dtc -I dts -O dtb <file_name>.dts -o <file_name>.dtb
```

The newly created DPL file can be flashed onto the board and used to boot to Linux.

4.1.12.6.5 Assign IP addresses to network interfaces

Static IP addresses can be assigned to network interfaces using the standard ifconfig or ip commands.

```
ifconfig <interface_name_in_Linux> <ip_address>
OR
ip address add <ip_address> dev <interface_name_in_linux>
```

Alternatively, Static IP addresses can also be assigned using netplan. Create a file called "`config.yaml`" in `/etc/netplan`. Using a text editor, add the following lines to this config file and save it.

```
network:
  version: 2
  renderer: networkd
  ethernets:
    <interface_name_in_Linux>:
      addresses:
        - <ip_address>/24
```

After saving this file, run the following command to apply this netplan configuration and then reboot the board.

```
sudo netplan apply
```

Once the board reboots, bring up the desired interface by using "`ifconfig <interface_name_in_Linux>` up" or " `ip link set <interface_name_in_Linux> up`" command. The interface will be assigned the IP address that was entered in the " `config.yaml`" file.

Netplan can also be used for dynamic IP address assignment using DHCP. For dynamic IP assignment, replace the contents of the config.yaml file with the following.

```
network:
  version: 2
  renderer: networkd
  ethernets:
    <interface_name_in_Linux>:
      dhcp4: true
```

Follow the same procedure as for the static IP assignment using Netplan after saving the "`config.yaml`" file.

4.1.13 LSDK Quick Start Guide for LX2160ARDB

4.1.13.1 Introduction

The following sections describe the procedure to program LSDK composite firmware for LX2160ARDB, and the most common use case procedure to automatically download and deploy LSDK default images to LX2160ARDB using flex-installer. For other optional/special use case examples, see Download and deploy LSDK images with flex-installer in Linux environment.

For more information on the different components of the board and on how to configure and boot the board, see QorIQ LX2160A Reference Design Board Getting Started Guide.

4.1.13.2 LX2160ARDB reference information

This section provides general information about LX2160ARDB which may come in handy as a reference while completing steps for deploying LSDK that follow.

Ethernet port map

Port name on chassis	Port name in U-Boot	Port name in TinyDistro	Port name in Linux
40G MAC2	DPMAC2@xlaui4	Interface name will be ethn e.g. eth0, eth1, and so on. Eth0 : If PCIe is connected, else it will be any connected DPAA2 interface.	PCIe : enp1s0 DPAA: ethx
10G MAC3	DPMAC3@xgmii		
10G MAC4	DPMAC4@xgmii		
25G MAC5	DPMAC5@25g-aui		
25G MAC6	DPMAC6@25g-aui		
1G MAC17	DPMAC17@rgmii-id		
1G MAC18	DPMAC18@rgmii-id		

NOTE

Interface name is not fixed in LX2160ARDB, depending upon which interface is active, name will be assigned. Interface names can be checked using `ls-listni` command.

```
root@TinyDistro:~# ls-listni
dprc.1/dpni.1 (interface: eth0, end point: dpmac.2)
dprc.1/dpni.0 (interface: eth1, end point: dpmac.17)
```

System memory map

Start address	End address	Size	Allocation	Comment
0x0000_0000_0000	0x0000_000F_FFFF	1 MB	CCSR - Boot ROM	64KB
0x0000_0010_0000	0x0000_00FF_FFFF	15 MB	Reserved	
0x0000_0100_0000	0x0000_0FFF_FFFF	240 MB	CCSR	
0x0000_1000_0000	0x0000_10FF_FFFF	16 MB	Reserved	SP alias this space to DCSR. Do not allocate.
0x0000_1100_0000	0x0000_11FF_FFFF	16 MB	Reserved	SP alias this space to DCSR. Do not allocate.
0x0000_1200_0000	0x0000_13FF_FFFF	32 MB	Reserved	SP alias this space to DCSR. Do not allocate.
0x0000_1400_0000	0x0000_17FF_FFFF	64 MB	Reserved	
0x0000_1800_0000	0x0000_181F_FFFF	2 MB	OCRAM	256 KB
0x0000_1820_0000	0x0000_18FF_FFFF	14 MB	Reserved	
0x0000_1900_0000	0x0000_19FF_FFFF	16MB	CoreSight STM	
0x0000_1A00_0000	0x0000_1BFF_FFFF	32MB	Reserved	
0x0000_1C00_0000	0x0000_1CFF_FFFF	16MB	Reserved	
0x0000_1D00_0000	0x0000_1FFF_FFFF	48MB	Reserved	
0x0000_2000_0000	0x0000_2FFF_FFFF	256MB	FlexSPI Region #1	

Table continues on the next page...

Table continued from the previous page...

0x0000_3000_0000	0x0000_3FFF_FFFF	256 MB	Reserved	
0x0000_4000_0000	0x0000_5FFF_FFFF	512 MB	Reserved	
0x0000_6000_0000	0x0000_7FFF_FFFF	512 MB	Reserved	
0x0000_8000_0000	0x0000_9FFF_FFFF	512 MB	GPP DRAM Region #1 (0-2 GB)	
0x0000_A000_0000	0x0000_BFFF_FFFF	512 MB		
0x0000_C000_0000	0x0000_DFFF_FFFF	512 MB		
0x0000_E000_0000	0x0000_FFFF_FFFF	512 MB		
0x0001_0000_0000	0x0001_FFFF_FFFF	4 GB	Reserved	
0x0002_0000_0000	0x0003_FFFF_FFFF	8 GB		
0x0004_0000_0000	0x0004_0FFF_FFFF	256 MB	FlexSPI Hole	Collapsed away by remapping logic to merge FlexSPI Region #1
0x0004_1000_0000	0x0004_FFFF_FFFF	3.75 GB	FlexSPI Region #2 (256 MB-4 GB)	3.75 GB
0x0005_0000_0000	0x0005_FFFF_FFFF	4 GB	Reserved	
0x0006_0000_0000	0x0006_FFFF_FFFF	4 GB	Reserved	
0x0007_0000_0000	0x0007_3FFF_FFFF	1 GB	DCSR	
0x0007_4000_0000	0x0007_FFFF_FFFF	3 GB	Reserved	
DPAA2 Portal Map				
0x0008_0000_0000	0x0008_03FF_FFFF	64 MB	Reserved	512 MB (0x0008_0000_0000-0x0008_1FFF_FFFF)
0x0008_0400_0000	0x0008_07FF_FFFF	64 MB	Reserved	
0x0008_0800_0000	0x0008_0BFF_FFFF	64 MB	Reserved	
0x0008_0C00_0000	0x0008_0FFF_FFFF	64 MB	MC - 1024 portals	
0x0008_1000_0000	0x0008_17FF_FFFF	128 MB	Reserved	
0x0008_1800_0000	0x0008_1FFF_FFFF	128 MB	QBMAN portals	
0x0008_2000_0000	0x000B_FFFF_FFFF	15.5 GB	Reserved	
0x000C_0000_0000	0x000F_FFFF_FFFF	16 GB	Reserved	
DPAA2 External address map				
0x0010_0000_0000	0x0010_FFFF_FFFF	4 GB	Reserved	(0x0010_0000_0000-0x001F_FFFF_FFFF)
0x0011_0000_0000	0x0011_FFFF_FFFF	4 GB	Reserved	
0x0012_0000_0000	0x0012_FFFF_FFFF	4 GB	Reserved	
0x0013_0000_0000	0x0013_FFFF_FFFF	4 GB	WRIOP access window	
0x0014_0000_0000	0x001B_FFFF_FFFF	32 GB	Reserved	
0x001C_0000_0000	0x001C_001F_FFFF	2 MB	Packet express buffer	
0x001C_4000_0000	0x001F_FFFF_FFFF	79 GB	Reserved	

Table continues on the next page...

Table continued from the previous page...

0x0020_0000_0000	0x0020_7FFF_FFFF	2 GB	DRAM Hole	
0x0020_8000_0000	0x003F_FFFF_FFFF	126 GB	GPP DRAM Region #2	
0x0040_0000_0000	0x005F_FFFF_FFFF	128 GB	Reserved DRAM Hole Other "Normal" Memory	Collapsed by remap logic after MemNoC to merge DRAM Regions #1 and #2
0x0060_0000_0000	0x007F_FFFF_FFFF	128 GB	GPP DRAM Region #3	
High-speed I/O (PCI Express)				
0x0080_0000_0000	0x0087_FFFF_FFFF	32 GB	PCI Express 1	(0x0080_0000_0000-0x00FF_FFFF_FFFF)
0x0088_0000_0000	0x008F_FFFF_FFFF	32 GB	PCI Express 2	
0x0090_0000_0000	0x0097_FFFF_FFFF	32 GB	PCI Express 3	
0x0098_0000_0000	0x009F_FFFF_FFFF	32 GB	PCI Express 4	
0x00A0_0000_0000	0x00A7_FFFF_FFFF	32 GB	PCI Express 5	
0x00A8_0000_0000	0x00AF_FFFF_FFFF	32 GB	PCI Express 6	

Supported boot options

LX2160ARDB supports the following boot options:

- FlexSPI NOR flash (referred to as "FSPI" or "FSPI flash" in the following sections). CS refers to Chip Select.
- eMMC
- SD card (SDHC1)

On-board switch options

The RDBs have user selectable switches for evaluating different boot options for the LX2160A device as given in the table below ('0' is OFF, '1' is ON).

Boot source	SW1[1:8]	SW2[1:8]	SW3[1:8]	SW4[1:8]
FSPI NOR CS0 (default)	1111 1000	0000 0110	1111 1100	1011 1000
FSPI NOR CS1	1111 1001	0000 0110	1111 1100	1011 1000
SD Card (SDHC1)	1000 1000	0000 0110	1111 1100	1011 1000
eMMC	1001 1000	0000 0110	1111 1100	1011 1000

Note: SW4[2] switch should be turned on [1], if user wants to power on the board as soon as power supply is turned on. This is useful in scenarios when the board is to be used remotely.

Changing the boot device configuration from the default setting may require additional changes in the RCW or in other code images. For information on RCW naming convention for LX2160ARDB, see https://source.codeaurora.org/external/qoriq/qoriq-components/rcw/tree/lx2160ardb/README?h=github.com.qoriq-os/integration.

In addition to the above switch settings, make sure that the following jumper settings are correct.

Table 18. LX2160ARDB jumpers

Jumper	Type	Name/function	Description
J6	1x2-pin connector	TA_BB_TMP_DETECT_B enable	Open: TA_BB_TMP_DETECT_B pin is grounded Shorted: TA_BB_TMP_DETECT_B pin is powered (default setting)
J7	1x2-pin connector	VBAT power for TA_BB_VDD enable	Not supported. Do not install J7. See *QorIQ LX2160A Reference Design Board Errata* for more details.
J8	1x2-pin connector	PROG_MTR voltage control (for NXP use only)	Open: PROG_MTR pin is powered off (default setting) Shorted: PROG_MTR pin is powered by OVDD (1.8 V)
J9	1x2-pin connector	TA_PROG_SFP voltage control (for NXP use only)	Open: TA_PROG_SFP pin is powered off (default setting) Shorted: TA_PROG_SFP pin is powered by OVDD (1.8 V)
J31	1x2-pin connector	USB1 mode setting	Open: USB1 works in Device mode Shorted: USB1 works in Host mode (default setting)
J33	1x2-pin connector	USB2 mode setting	Open: USB2 works in On-The-Go (OTG) mode (default setting) Shorted: USB2 works in Host mode
J56	2x3-pin connector	Inphi CS4223 GUI access	Normal: 1-2 short, 5-6 short (default setting) GUI mode: 1-2 open, 5-6 open
J57	1x2-pin connector	Inphi CS4223 GUI enable	Normal: Open (default setting) GUI mode: Short
J58	1x2-pin connector	Fan speed	Open: 100% speed Short: 50% speed (default setting)

FlexSPI NOR Flash Chip-select

FlexSPI NOR flash is a simple and convenient destination for deploying images so it is frequently used.

The benefit of this feature is that it allows more than one set of images to be independently deployed to the one NOR flash. It is helpful during development because you can use the U-Boot image in one chip-select to program an image set into a different chip-select. If the new images are flawed, the old images are still functional to let you deploy corrected images.

The logic on the board usually allows the NOR flash to be accessed from different CS (chip select) option. Each CS is connected to dedicated NOR flash devices, those CS are called, DEV#0 and DEV#1. U-Boot prints which CS is loaded from. The output looks like following.

```
NOTICE:  BL2: v1.5(release):LSDK-19.09-TC1-1-g1670b28c
NOTICE:  BL2: Built : 06:17:37, Sep  8 2019
```

```
NOTICE:  UDIMM 18ASF1G72AZ-2G6B1
ERROR:   DDR clock (MCLK cycle 690 ps) is fater than DIMM can support.
NOTICE:  DDR4 UDIMM with 2-rank 64-bit bus (x8)

NOTICE:  16 GB DDR4, 64-bit, CL=20, ECC on, 256B, CS0+CS1
NOTICE:  BL2: Booting BL31
NOTICE:  BL31: v1.5(release):LSDK-19.09-TC1-1-g1670b28c
NOTICE:  BL31: Built : 06:17:45, Sep  8 2019
NOTICE:  Welcome to LX2160 BL31 Phase


U-Boot 2019.04-gcaf6c6f073 (Sep 08 2019 - 03:08:09 +0800)

SoC:  LX2160ACE Rev1.0 (0x87360010)
Clock Configuration:
       CPU0(A72):2000 MHz  CPU1(A72):2000 MHz  CPU2(A72):2000 MHz
       CPU3(A72):2000 MHz  CPU4(A72):2000 MHz  CPU5(A72):2000 MHz
       CPU6(A72):2000 MHz  CPU7(A72):2000 MHz  CPU8(A72):2000 MHz
       CPU9(A72):2000 MHz  CPU10(A72):2000 MHz  CPU11(A72):2000 MHz
       CPU12(A72):2000 MHz  CPU13(A72):2000 MHz  CPU14(A72):2000 MHz
       CPU15(A72):2000 MHz
       Bus:      700  MHz  DDR:      2900 MT/s
Reset Configuration Word (RCW):
       00000000: 50777738 1c500050 00000000 00000000
       00000010: 00000000 0c010000 00000000 00000000
       00000020: 022001a0 00002580 00000000 00000096
       00000030: 00000000 00000000 00000000 00000000
       00000040: 00000000 00000000 00000000 00000000
       00000050: 00000000 00000000 00000000 00000000
       00000060: 00000000 00000000 00027000 00000000
       00000070: 08b30010 001d0020
Model: NXP Layerscape LX2160ARDB Board
Board: LX2160ACE Rev1.0-RDB, Board version: B, boot from FlexSPI DEV#1
FPGA: v1.7
SERDES1 Reference: Clock1 = 161.13MHz Clock2 = 161.13MHz
SERDES2 Reference: Clock1 = 100MHz Clock2 = 100MHz
SERDES3 Reference: Clock1 = 100MHz Clock2 = 100MHz
VID: Core voltage after adjustment is at 802 mV
DRAM:  15.9 GiB
DDR    15.9 GiB (DDR4, 64-bit, CL=20, ECC on)
       DDR Controller Interleaving Mode: 256B
       DDR Chip-Select Interleaving Mode: CS0+CS1
Using SERDES1 Protocol: 19 (0x13)
Using SERDES2 Protocol: 5 (0x5)
Using SERDES3 Protocol: 2 (0x2)
MMC:   FSL_SDHC: 0, FSL_SDHC: 1
Loading Environment from SPI Flash... SF: Detected mt35xu512g with page size 256 Bytes, erase size
128 KiB, total 64 MiB
*** Warning - bad CRC, using default environment

EEPROM: NXID v1
In:    serial_pl01x
Out:   serial_pl01x
Err:   serial_pl01x
Net:
CS4223: Using software initialization...
CS4223: edc/gain/equalization settings: host: CX/4dB/4dB, line: SR/4dB/4dB
DPMAC3@xgmii running firmware version 3.5.E
DPMAC3@xgmii: system interface XFI
DPMAC3@xgmii: Aquantia AQR107 Firmware Version 3.5.e
```

```
DPMAC4@xgmii running firmware version 3.5.A
DPMAC4@xgmii: system interface USXGMII
DPMAC4@xgmii: Aquantia AQR107 Firmware Version 3.5.a
PCIe0: pcie@3400000 disabled
PCIe1: pcie@3500000 disabled
PCIe2: pcie@3600000 Root Complex: x1 gen1
PCIe3: pcie@3700000 disabled
PCIe4: pcie@3800000 Root Complex: no link
PCIe5: pcie@3900000 disabled
e1000: 68:05:ca:04:d5:6a
       DPMAC2@xlaui4, DPMAC3@xgmii, DPMAC4@xgmii, DPMAC5@25g-aui, DPMAC6@25g-aui, DPMAC17@rgmii-id,
DPMAC18@rgmii-id, e1000#0
crc32+
fsl-mc: Booting Management Complex ... SUCCESS
fsl-mc: Management Complex booted (version: 10.18.0, boot status: 0x1)
Hit any key to stop autoboot:  0
=>
```

Boot option switching can be performed in U-Boot using the following statements.

- Switch to FlexSPI NOR flash 0 (default):

```
=>qixis_reset
```

- Switch to FlexSPI NOR flash 1:

```
=>qixis_reset altbank
```

- Switch to SD:

```
=>qixis_reset sd
```

- Switch to eMMC:

```
=>qixis_reset emmc
```

U-Boot Environment Variables

- DPAA2-specific Environment Variables
  - **mcboottimeout**: Defines Management Complex boot timeout in milliseconds. If this variable is not defined the complile-time value, `CONFIG_SYS_LS_MC_BOOT_TIMEOUT_MS` is the default. Normally, users do not need to set this variable because the default is acceptable.
  - **mcmemsize**: Defines amount of system DDR to be use by the Management Complex. If this variable is not defined, the compile-time value `CONFIG_SYS_LS_MC_DRAM_BLOCK_MIN_SIZE` is the default. Normally, users do not need to set this variable because the default is acceptable.
  - **mcinitcmd**: Contains commands to load and start the Management Complex automatically before the U-Boot count down to boot starts. If this variable is defined, its contents are `run`. The default value assumes that the Management Complex (MC) firmware and Data Path Control file are stored in FlexSPI flash/SD at fixed addresses. The default value for FlexSPI boot is `mcinitcmd= sf probe 0:0 && sf read 0x80640000 0x640000 0x80000 && env exists secureboot && esbc_validate 0x80640000 && esbc_validate 0x80680000; sf read 0x80a00000 0xa00000 0x300000 && sf read 0x80e00000 0xe00000 0x100000; fsl_mc start mc 0x80a00000 0x80e00000.`

    The default value for SD boot is `mcinitcmd=mmc read 0x80a00000 0x5000 0x1200;mmc read 0x80e00000 0x7000 0x800;env exists secureboot && mmc read 0x80640000 0x3200 0x20 && mmc read 0x80680000 0x3400 0x20 && esbc_validate 0x80640000 && esbc_validate 0x80680000 ;fsl_mc start mc 0x80a00000`

`0x80e00000`. Users may change this variable as needed to load the MC files from sources, other than FlexSPI into DDR, and then start the MC using the fsl_mc command. For example, the files may be on a disk drive.

- Environment variables that are not specific to DPAA2
  - bootcmd: Contains commands that are automatically executed when the U-Boot boot command is run. This happens automatically when the user does not interrupt U-Boot's initial count down. In normal usage, bootcmd should contain the command to apply the Management Complex Data Path Layout (DPL) file because this must be done before booting Linux. When booting from FlexSPI NOR, the default bootcmd is `sf probe 0:0; sf read 0x806c0000 0x6c0000 0x40000; env exists mcinitcmd && env exists secureboot && esbc_validate 0x806c0000; sf read 0x80d00000 0xd00000 0x100000; env exists mcinitcmd && fsl_mc lazyapply dpl 0x80d00000; run distro_bootcmd; run xspi_bootcmd; env exists secureboot && esbc_halt;`

    When booting from SD, the default bootcmd is `bootcmd=env exists mcinitcmd && mmcinfo; mmc read 0x80d00000 0x6800 0x800; env exists mcinitcmd && env exists secureboot && mmc read 0x806C0000 0x3600 0x20 && esbc_validate 0x806C0000; env exists mcinitcmd && fsl_mc lazyapply dpl 0x80d00000; run distro_bootcmd; run sd_bootcmd; env exists secureboot && esbc_halt;`

For more information on U-Boot distro boot command, see “LSDK U-Boot uses distro boot feature” in LSDK documentation.

4.1.13.3 LX2160ARDB recovery information

If LX2160ARDB board fails to boot from FSPI NOR bank #0 , you can recover FSPI NOR bank #0 from FSPI NOR bank #1 by following these steps:

1. Download the prebuilt composite firmware image:

```
$ wget https://www.nxp.com/lgfiles/sdk/lsdk2004/firmware_lx2160ardb_uboot_xspiboot.img
```

2. Boot LX2160ARDB from FSPI NOR bank #1 with the following switch setting:
   - SW1[1:8] = 1111 1001
3. Program FSPI NOR bank #0 from FSPI NOR bank #1:

```
=> sf probe 0:1
=> tftp $load_addr firmware_lx2160ardb_uboot_xspiboot.img
=> sf erase 0x0 +$filesize && sf write $load_addr 0x0 $filesize
```

4. Change switch setting back to default:
   - SW1[1:8] = 1111 1000
5. Reset the board, board should boot from FSPI NOR bank #0:

```
=> reset
```

NOTE

If LX2160ARDB fails to boot from both the FlexSPI NOR flash banks, you need to recover the board using **CodeWarrior Development Studio for QorIQ LS series - ARM V8 ISA**. For steps to recover the board using the CodeWarrior tool, see section "*8.6 Board Recovery*" in ARM V8 ISA, Targeting Manual.

4.1.13.4 Program LSDK composite firmware image

This topic explains steps to program FlexSPI NOR firmware image to FlexSPI NOR flash on LX2160ARDB and SD/eMMC firmware image to SD/eMMC card on LX2160ARDB.

To program LSDK composite firmware image to FlexSPI NOR flash on LX2160ARDB:

1. Download the firmware (from NXP website) to the Linux host machine.

```
For LX2160A Rev1: $ wget https://www.nxp.com/lgfiles/sdk/lsdk2004/
firmware_lx2160ardb_uboot_xspiboot.img

For LX2160A Rev2: $ wget https://www.nxp.com/lgfiles/sdk/lsdk2004-update-290520/
firmware_lx2160ardb_rev2_uboot_xspiboot.img
```

2. Reboot the board from FlexSPI NOR flash 0 and stop autoboot to enter U-Boot prompt.
3. Under U-Boot, download the firmware to the reference board using one of the following options:
   - Load firmware from the TFTP server

```
For LX2160A Rev1: => tftp $load_addr firmware_lx2160ardb_uboot_xspiboot.img

For LX2160A Rev2: => tftp $load_addr firmware_lx2160ardb_rev2_uboot_xspiboot.img
```

   - Load firmware image from partition on mass storage device (SD, USB, or SATA)

```
For LX2160A Rev1: => load mmc <device:partition>
$load_addr firmware_lx2160ardb_uboot_xspiboot.img

For LX2160A Rev2: => load mmc <device:partition>
$load_addr firmware_lx2160ardb_rev2_uboot_xspiboot.img
```

     For example:

```
For LX2160A Rev1: => load mmc 0:2 $load_addr firmware_lx2160ardb_uboot_xspiboot.img

For LX2160A Rev2: => load mmc 0:2 $load_addr firmware_lx2160ardb_rev2_uboot_xspiboot.img
```

     Or

```
For LX2160A Rev1: => load usb <device:partition>
$load_addr firmware_lx2160ardb_uboot_xspiboot.img

For LX2160A Rev2: => load usb <device:partition>
$load_addr firmware_lx2160ardb_rev2_uboot_xspiboot.img
```

     Or

```
For LX2160A Rev1: => load scsi <device:partition>
$load_addr firmware_lx2160ardb_uboot_xspiboot.img

For LX2160A Rev2: => load scsi <device:partition>
$load_addr firmware_lx2160ardb_rev2_uboot_xspiboot.img
```

NOTE

Use the following command if the SD card is formatted/created using LSDK flex-installer command:

```
=> load <interface> [<dev[:part]> [<addr> [<filename> [bytes [pos]]]]]
```

For example:

```
For LX2160A Rev1: => load mmc 0:2
$load_addr firmware_lx2160ardb_uboot_xspiboot.img

For LX2160A Rev2: => load mmc 0:2
$load_addr firmware_lx2160ardb_rev2_uboot_xspiboot.img
```

Use the following command if the SD card is formatted/created on a Windows PC:

```
=> fatload <interface> [<dev[:part]> [<addr> [<filename> [bytes [pos]]]]]
```

For example:

```
For LX2160A Rev1: => fatload mmc 0:2
$load_addr firmware_lx2160ardb_uboot_xspiboot.img

For LX2160A Rev2: => fatload mmc 0:2
$load_addr firmware_lx2160ardb_rev2_uboot_xspiboot.img
```

Use the following command if the SD card is formatted/created on a Linux PC:

```
=> ext2load <interface> [<dev[:part]> [<addr> [<filename> [bytes [pos]]]]]
```

For example:

```
For LX2160A Rev1: => ext2load mmc 0:2
$load_addr firmware_lx2160ardb_uboot_xspiboot.img

For LX2160A Rev2: => ext2load mmc 0:2
$load_addr firmware_lx2160ardb_rev2_uboot_xspiboot.img
```

Also note that LSDK flex-installer command puts the images on the IInd partition, so `0:2` is used in the `load` command. If the SD card is formatted on Windows PC or Linux PC for single partition only, then `0` should be used instead of `0:2` in the `fatload`/`ext2load` command.

4. Program the firmware to FlexSPI NOR flash 1.

```
=> sf probe 0:1
=> sf erase 0 +$filesize && sf write $load_addr 0 $filesize
```

5. Reset and boot the board from FlexSPI NOR flash 1. The system will automatically boot up TinyDistro (login using root/root) or LSDK distro (login using root/root or user/user) available on the removable storage device.

```
=> qixis_reset altbank
```

To program LSDK composite firmware image to SD/eMMC on LX2160ARDB:

1. Download the firmware (from NXP website) to the Linux host machine.

   For SD boot:

```
For LX2160A Rev1: $wget https://www.nxp.com/lgfiles/sdk/lsdk2004/
firmware_lx2160ardb_uboot_sdboot.img
```

```
For LX2160A Rev2: $wget https://www.nxp.com/lgfiles/sdk/lsdk2004-update-290520/
firmware_lx2160ardb_rev2_uboot_sdboot.img
```

For eMMC boot:

```
For LX2160A Rev1: $wget https://www.nxp.com/lgfiles/sdk/
lsdk2004/firmware_lx2160ardb_uboot_emmcboot.img

For LX2160A Rev2: $wget https://www.nxp.com/lgfiles/sdk/lsdk2004-
update-290520/firmware_lx2160ardb_rev2_uboot_emmcboot.img
```

2. Reboot the board from FlexSPI NOR flash 0 and stop autoboot to enter U-Boot prompt.
3. Under U-Boot, download the firmware to the reference board using one of the following options:
   - Load firmware from the TFTP server

     For SD boot:

     ```
     For LX2160A Rev1: => tftp $load_addr firmware_lx2160ardb_uboot_sdboot.img

     For LX2160A Rev2: => tftp $load_addr firmware_lx2160ardb_rev2_uboot_sdboot.img
     ```

     For eMMC boot:

     ```
     For LX2160A Rev1: => tftp $load_addr firmware_lx2160ardb_uboot_emmcboot.img

     For LX2160A Rev2: => tftp $load_addr firmware_lx2160ardb_rev2_uboot_emmcboot.img
     ```

   - Load firmware image from partition on mass storage device (SD, USB, or SATA)

     For SD boot:

     ```
     For LX2160A Rev1: => load mmc <device:partition>
     $load_addr firmware_lx2160ardb_uboot_sdboot.img

     For LX2160A Rev2: => load mmc <device:partition>
     $load_addr firmware_lx2160ardb_rev2_uboot_sdboot.img
     ```

     For example:

     ```
     For LX2160A Rev1: => load mmc 0:2 $load_addr firmware_lx2160ardb_uboot_sdboot.img

     For LX2160A Rev2: => load mmc 0:2 $load_addr firmware_lx2160ardb_rev2_uboot_sdboot.img
     ```

     Or

     ```
     For LX2160A Rev1: => load usb <device:partition>
     $load_addr firmware_lx2160ardb_uboot_sdboot.img

     For LX2160A Rev2: => load usb <device:partition>
     $load_addr firmware_lx2160ardb_rev2_uboot_sdboot.img
     ```

     Or

     ```
     For LX2160A Rev1: => load scsi <device:partition>
     $load_addr firmware_lx2160ardb_uboot_sdboot.img
     ```

```
For LX2160A Rev2: => load scsi <device:partition>
$load_addr firmware_lx2160ardb_rev2_uboot_sdboot.img
```

For emmc boot:

```
For LX2160A Rev1: => load mmc <device:partition>
$load_addr firmware_lx2160ardb_uboot_emmcboot.img

For LX2160A Rev2: => load mmc <device:partition>
$load_addr firmware_lx2160ardb_rev2_uboot_emmcboot.img
```

For example:

```
For LX2160A Rev1: => load mmc 0:2 $load_addr firmware_lx2160ardb_uboot_emmcboot.img

For LX2160A Rev2: => load mmc 0:2 $load_addr firmware_lx2160ardb_rev2_uboot_emmcboot.img
```

Or

```
For LX2160A Rev1: => load usb <device:partition>
$load_addr firmware_lx2160ardb_uboot_emmcboot.img

For LX2160A Rev2: => load usb <device:partition>
$load_addr firmware_lx2160ardb_rev2_uboot_emmcboot.img
```

Or

```
For LX2160A Rev1: => load scsi <device:partition>
$load_addr firmware_lx2160ardb_uboot_emmcboot.img

For LX2160A Rev2: => load scsi <device:partition>
$load_addr firmware_lx2160ardb_rev2_uboot_emmcboot.img
```

NOTE

Use the following command if the SD/eMMC card is formatted/created using LSDK flex-installer command:

```
=> load <interface> [<dev[:part]> [<addr> [<filename> [bytes [pos]]]]]
```

For example:

```
For LX2160A Rev1: => load mmc 0:2
$load_addr firmware_lx2160ardb_uboot_sdboot.img

For LX2160A Rev2: => load mmc 0:2
$load_addr firmware_lx2160ardb_rev2_uboot_sdboot.img
```

Use the following command if the SD card is formatted/created on a Windows PC:

```
=> fatload <interface> [<dev[:part]> [<addr> [<filename> [bytes [pos]]]]]
```

For example:

```
For LX2160A Rev1: => fatload mmc 0:2
$load_addr firmware_lx2160ardb_uboot_sdboot.img

For LX2160A Rev2: => fatload mmc 0:2
$load_addr firmware_lx2160ardb_rev2_uboot_sdboot.img
```

Use the following command if the SD card is formatted/created on a Linux PC:

```
=> ext2load <interface> [<dev[:part]> [<addr> [<filename> [bytes [pos]]]]]
```

For example:

```
For LX2160A Rev1: => ext2load mmc 0:2
$load_addr firmware_lx2160ardb_uboot_sdboot.img

For LX2160A Rev2: => ext2load mmc 0:2
$load_addr firmware_lx2160ardb_rev2_uboot_sdboot.img
```

Also note that LSDK flex-installer command puts the images on the IInd partition, so `0:2` is used in the `load` command. If the SD card is formatted on Windows PC or Linux PC for single partition only, then `0` should be used instead of `0:2` in the `fatload`/`ext2load` command.

4. Program the firmware to SD card.

```
=> mmc dev 0; mmc write $load_addr 8 1fff8
```

5. Program the firmware to eMMC card.

```
=> mmc dev 1; mmc write $load_addr 8 1fff8
```

6. Reset and boot the board from SD card. The system will automatically boot up TinyDistro (login using root/root) or LSDK distro (login using root/root or user/user) available on the removable storage device.

   For SD boot:

```
=> qixis_reset sd
```

For eMMC boot:

```
=> qixis_reset emmc
```

4.1.13.5 Automatically download and deploy LSDK images

To automatically download and deploy LSDK images to a board using a removable storage device which can be connected to a local Linux host machine:

1. Connect the removable storage device to the Linux host machine.
2. Download `flex-installer` to deploy LSDK images.

```
$ wget https://www.nxp.com/lgfiles/sdk/lsdk2004-update-290520/flex-installer && chmod +x flex-
installer && sudo mv flex-installer /usr/bin
```

3. Execute the following flex-installer command to automatically install LSDK default `rootfs_lsdk2004_LS_arm64_main.tgz` and `bootpartition_LS_arm64_lts_4.19.tgz`.

```
$ flex-installer -i auto -m lx2160ardb -d <device>      (for LX2160A Rev1)
$ flex-installer -i auto -m lx2160ardb_rev2 -d <device> (for LX2160A Rev2)
```

NOTE

- Use the command `cat /proc/partitions` to see a list of devices and their sizes to make sure that the correct device names have been chosen.
- The SD/USB/SATA storage drive in the Linux PC is detected as /dev/sdX, where X is a letter such as a, b, c. Make sure to choose the correct device name, because data on this device will be replaced.
- If the Linux host machine supports read/write SD card directly without an extra SD card reader device, the device name of SD card is typically mmcblk0.

4. Unplug removable storage device from the Linux host and plug into the reference board.
5. Make sure the DIP switch settings on the board are correct to boot from the desired boot medium.
6. Power-on the board. The system automatically boots up to the LSDK distro.
   - Use the following default credentials to log onto to the LSDK distro:
     — root/root, or
     — user/user

To automatically download and deploy LSDK images directly to the target storage drive on a board:

1. Plug the storage device into the reference board.
2. Check DIP switch settings for the desired boot type.
3. Power-on the board and execute the following command under U-boot prompt to boot the board to TinyDistro. TinyDistro is a non-customizable prebuilt ramdisk rootfs deployed in flash media on the reference board which can be used to execute the flex-installer commands. This rootfs fits into the firmware image on flash and is therefore called tiny.
   - For FlexSPI NOR boot:

```
=> run xspi_bootcmd
```

   - For SD/eMMC boot:

```
=> run sd_bootcmd
```

4. Login to TinyDistro as “root” and bring up a network interface.

   Dynamic IP address assignment:

   ```
   $ udhcpc -i <port name in TinyDistro>
   ```

   Static IP address assignment:

   ```
   $ ifconfig <port name in TinyDistro> <IP address> netmask <netmask address> up
   ```

   The port name in Linux TinyDistro corresponding to each of the ports on the reference board chassis is given in section LX2160ARDB reference information

5. Download `flex-installer` to deploy LSDK images.

   ```
   $ wget https://www.nxp.com/lgfiles/sdk/lsdk2004-update-290520/flex-installer && chmod +x flex-installer && sudo mv flex-installer /usr/bin
   ```

6. Execute the following flex-installer command to automatically install LSDK default `rootfs_lsdk2004_LS_arm64_main.tgz` and `bootpartition_LS_arm64_lts_4.19.tgz`.

   ```
   $ flex-installer -i auto -m lx2160ardb -d <device>
   ```

   NOTE

   - Use the command `cat /proc/partitions` to see a list of devices and their sizes to make sure that the correct device names have been chosen.
   - The SD/USB/SATA storage drive in the Linux PC is detected as /dev/sdX, where X is a letter such as a, b, c. Make sure to choose the correct device name, because data on this device will be replaced.
   - If the Linux host machine supports read/write SD card directly without an extra SD card reader device, the device name of SD card is typically mmcblk0.

7. Power-on the board. The system automatically boots up to the LSDK distro.
   - Use the following default credentials to log onto to the LSDK distro:
     - root/root, or
     - user/user

4.1.13.6 Bringing up DPPA2 network interfaces

This section describes the procedure to bring up DPAA2 network interfaces.

4.1.13.6.1 Use Linux commands to list network interfaces

The Linux distribution boots with a default DPL file which enables only one network interface on DPAA2 by default as a standard kernel Ethernet interface. Run the following standard Linux command to get a list of enabled interfaces.

```
$ ip link show
```

The default interface is named eth0 (or eth1 if a PCI Express network interface card is discovered first).

4.1.13.6.2 Use restool wrapper scripts to list DPAA2 objects

User-friendly wrapper scripts are provided in the release rootfs to assist with dynamic creation of DPNIs and associated dependencies. The wrapper scripts call restool commands.

Enter the following command for a list of the available wrapper scripts:

```
$ls-main
```

The Ethernet interfaces have corresponding DPPA2 objects associated with them. Run the following restool wrapper script to list the enabled data path network interface (DPNI) associated with ni0 (or ni1).

```
$ ls-listni
dprc.1/dpni.1 (interface: eth0, end point: dpmac.2)
dprc.1/dpni.0 (interface: eth1, end point: dpmac.17)
```

This indicates that the data path network interface named dpni.0 which belongs to the DPAA2 resource container dprc.1 is present. This DPNI object corresponds to the interface named ni0 which is connected to dpmac.17.

The following command can be used to list all DPMAC objects present in the system and what they are connected to (if anything).

```
$ ls-listmac
dprc.1/dpmac.18
dprc.1/dpmac.17 (end point: dpni.0)
dprc.1/dpmac.6
dprc.1/dpmac.5
dprc.1/dpmac.4
dprc.1/dpmac.3
dprc.1/dpmac.2 (end point: dpni.1)
```

For more information on DPAA2 objects and restool, see DPAA2-specific Software in LSDK documentation.

4.1.13.6.3 Add and destroy network interfaces

As mentioned in previous sections, interface ni0 corresponds to the data path network interface dpni.0 which is the only ones enabled by default DPL file. However, users may need more network interface enabled. Additional and fully featured DPNI objects can be created using restool. Once these objects are created, the configuration can be saved to a custom DPL file.

Running the command below is the simplest way of adding a DPNI object and connecting it to a DPMAC. In this example DPNI object is being connected to dpmac.4 using default options and arguments.

```
$ ls-addni dpmac.4
Created interface: ni2 (object:dpni.2, endpoint: dpmac.4)
```

Run the following command to display information about the newly created dpni.2 interface. The number of queues is shown to be 16, one queue per core for 16 cores which can receive traffic.

```
$ restool dpni info dpni.2
dpni version: 7.8
dpni id: 2
plugged state: plugged
endpoint state: 0
endpoint: dpmac.4, link is down
link status: 0 - down
mac address: ae:ff:05:f9:8e:02
dpni_attr.options value is: 0
num_queues: 16
num_rx_tcs: 1
num_tx_tcs: 1
mac_entries: 16
vlan_entries: 0
qos_entries: 0
fs_entries: 64
qos_key_size: 0
```

```
fs_key_size: 56
ingress_all_frames: 0
ingress_all_bytes: 0
ingress_multicast_frames: 0
ingress_multicast_bytes: 0
ingress_broadcast_frames: 0
ingress_broadcast_bytes: 0
egress_all_frames: 0
egress_all_bytes: 0
egress_multicast_frames: 0
egress_multicast_bytes: 0
egress_broadcast_frames: 0
egress_broadcast_bytes: 0
ingress_filtered_frames: 0
ingress_discarded_frames: 0
ingress_nobuffer_discards: 0
egress_discarded_frames: 0
egress_confirmed_frames: 0
```

If a user wants to connect DPMAC17 (which is connected to dpni.0 by default) to a fully featured data path network interface, the user will first need to unbind and destroy the existing interface by using the commands below.

Unbind dpni.0 from the driver

```
$ echo dpni.0 > /sys/bus/fsl-mc/drivers/fsl_dpaa2_eth/unbind
```

Destroy data path network interface dpni.0

```
$ restool dpni destroy dpni.0
dpni.0 is destroyed
```

Now add back dpmac.17 using the command below. Even though dpmac.17 is again connected to dpni.0, dpni.0 now uses 16 queues for traffic distribution.

```
$ ls-addni dpmac.17
Created interface: ni0 (object:dpni.0, endpoint: dpmac.17)
```

4.1.13.6.4 Save configuration to a custom DPL file (Optional)

Once the additional DPNI objects are created, a custom DPL file can be generated using the following command. This DPL file has a .dts format and is created on the reference board.

```
$ restool dprc generate-dpl dprc.1 > <file_name>.dts
```

The resulting .dts file must be compiled using the dtc tool to generate a .dtb file. Copy this file to a Linux host machine or server using SCP and run the following command to convert it to a .dtb file.

```
$ dtc -I dts -O dtb <file_name>.dts -o <file_name>.dtb
```

The newly created DPL file can be flashed onto the board and used to boot to Linux.

4.1.13.6.5 Assign IP addresses to network interfaces

Static IP addresses can be assigned to network interfaces using the standard ifconfig or ip commands.

```
ifconfig <interface_name_in_Linux> <ip_address>
OR
ip address add <ip_address> dev <interface_name_in_linux>
```

Alternatively, Static IP addresses can also be assigned using netplan. Create a file called "`config.yaml`" in `/etc/netplan`. Using a text editor, add the following lines to this config file and save it.

```
network:
  version: 2
  renderer: networkd
  ethernets:
    <interface_name_in_Linux>:
      addresses:
        - <ip_address>/24
```

After saving this file, run the following command to apply this netplan configuration and then reboot the board.

```
sudo netplan apply
```

Once the board reboots, bring up the desired interface by using "`ifconfig <interface_name_in_Linux>` up" or " `ip link set <interface_name_in_Linux> up`" command. The interface will be assigned the IP address that was entered in the " `config.yaml`" file.

Netplan can also be used for dynamic IP address assignment using DHCP. For dynamic IP assignment, replace the contents of the config.yaml file with the following.

```
network:
  version: 2
  renderer: networkd
  ethernets:
    <interface_name_in_Linux>:
      dhcp4: true
```

Follow the same procedure as for the static IP assignment using Netplan after saving the "`config.yaml`" file.

4.2 LSDK memory layout and Userland

Flash layout

The following table shows the memory layout of various firmware stored in NOR/NAND/QSPI/XSPI flash device or SD card on all QorIQ Reference Design Boards.

NOTE

When the board boots from NOR flash, the NOR bank from which the board boots is considered as the "current bank" and the other bank is considered as the "alternate bank". For example, if LS1043ARDB boots from NOR bank 4, to update an image on NOR bank 0, you need to use the "alternate bank" address range, `0x64000000 - 0x64F00000`.

Table 19. Unified 64MiB memory layout of NOR/QSPI/XSPI/NAND/SD media for composite firmware on all Layerscape platforms

Firmware Definition		MaxSize	Flash Offset (QSPI/XSPI/NAND flash)	Absolute address (NOR current bank on LS1043ARDB, LS1021ATWR)	Absolute address (NOR alternate bank on LS1043ARDB, LS1021ATWR)	Absolute address (NOR current bank on LS2088ARDB)	Absolute address (NOR alternate bank on LS2088ARDB)	SD start block no.
RCW + PBI + BL2 (bl2_<boot_mode>.pbl)[1]		1MiB	0x00000000	0x60000000	0x64000000	0x580000000	0x584000000	0x00008
TF-A FIP image (BL31 + TEE (BL32) + U-Boot/ UEFI (BI33)) (fip.bin)[2]		4MiB	0x00100000	0x60100000	0x64100000	0x580100000	0x584100000	0x00800
Boot firmware environment		1MiB	0x00500000	0x60500000	0x64500000	0x580500000	0x584500000	0x02800
Secure boot headers		2MiB	0x00600000	0x60600000	0x64600000	0x580600000	0x584600000	0x03000
Secure header or DDR PHY FW		512KiB	0x00800000	0x60800000	0x64800000	0x580800000	0x584800000	0x04000
Fuse provisioning header		512KiB	0x00880000	0x60880000	0x64880000	0x580880000	0x584880000	0x04400
DPAA1 FMAN ucode		256KiB	0x00900000	0x60900000	0x64900000	0x580900000	0x584900000	0x04800
QE firmware or DP firmware		256KiB	0x00940000	0x60940000	0x64940000	0x580940000	0x584940000	0x04A00
Ethernet PHY firmware		256KiB	0x00980000	0x60980000	0x64980000	0x580980000	0x584980000	0x04C00
Script for flashing image		256KiB	0x009C0000	0x609C0000	0x649C0000	0x5809C0000	0x5849C0000	0x04E00
DPAA2-MC or PFE firmware		3MiB	0x00A00000	0x60A00000	0x64A00000	0x580A00000	0x584A00000	0x05000
DPAA2 DPL		1MiB	0x00D00000	0x60D00000	0x64D00000	0x580D00000	0x584D00000	0x06800
DPAA2 DPC		1MiB	0x00E00000	0x60E00000	0x64E00000	0x580E00000	0x584E00000	0x07000
Device tree (needed by UEFI)		1MiB	0x00F00000	0x60F00000	0x64F00000	0x580F00000	0x584F00000	0x07800
Kernel	lsdk_linux_<arch>_LS_tiny.itb	16MiB	0x01000000	0x61000000	0x65000000	0x581000000	0x585000000	0x08000
Ramdisk rfs		32MiB	0x02000000	0x62000000	0x66000000	0x582000000	0x586000000	0x10000

Table continues on the next page...

Firmware Definition	MaxSize	Flash Offset (QSPI/XSPI/ NAND flash)	Absolute address (NOR current bank on LS1043ARDB, LS1021ATWR)	Absolute address (NOR alternate bank on LS1043ARDB, LS1021ATWR)	Absolute address (NOR current bank on LS2088ARDB)	Absolute address (NOR alternate bank on LS2088ARDB)	SD start block no.

1. For any update in the BL2 source code or RCW binary, the `bl2_<boot_mode>.pbl` binary needs to be recompiled.
2. For any update in the BL31, BL32, or BL33 binaries, the `fip.bin` binary needs to be recompiled.

LSDK composite firmware_<machine>_<bootloader>_<boottype>.img contains RCW, ATF, U-Boot/UEFI, secure boot headers, Ethernet PHY firmware, device tree , kernel and tiny rootfs, showed in the table above, the lsdk_linux_arm64_LS_tiny.itb consists of kernel image, device tree of multiple reference boards, rootfs_lsdk_yocto_tiny_arm64.cpio.gz.

Table 20. 2MB memory layout of QSPI/SD media on Layerscape platform LS1012AFRWY

Firmware definition	Max size	Location	SD Start Block No.
RCW+PBI+BL2 (bl2_<boot_mode>.pbl)	64KB	0x0000_0000 - 0x0000_FFFF	0x00008
Reserved	64KB	0x0001_0000 - 0x0001_FFFF	0x00080
PFE firmware	256KB	0x0002_0000 - 0x0005_FFFF	0x00100
FIP (BL31+BL32+BL33)	1MB	0x0006_0000 - 0x000D_FFFF	0x00300
Environment varialbes	64KB	0x001D_0000 - 0x001D_FFFF	0x00E80
Reserved	64KB	0x001E_0000 - 0x001E_FFFF	0x00F00
Secureboot headers	64KB	0x001F_0000 - 0x001F_FFFF	0x00F80

Generally, please don't change the default offset of the 1st image (RCW + PBI + BL2) and the 2nd image (TF-A FIP image) to avoid causing the target board bricked, you can change the default offset of other images to use your own layout by modifying the offset of various firmware by editting <flexbuild-dir>/configs/board/common/memorylayout.cfg.

Storage layout on SD/USB/SATA for LSDK images deployment

With command 'flex-installer -i auto -m <machine> -d <device>', the LSDK distro can be installed into an SD/USB/SATA storage disk which should have at least 16GB of memory space by default as per the following layout.

Table 21. The default layout of SD/USB/SATA storage device for LSDK distro images deployment

Region 1 (RAW) 4KiB	Region 2 (RAW, only SD Boot) 64MiB	Region 3 (**Partition-1** FAT/EXT4) 100MiB	Region 4 (**Partition-2** EXT4) 2GiB Boot Partition	Region 5 (**Partition-3** EXT4) 5GiB Backup Partition	Region 6 (**Partition-4** EXT4) Primary RFS in rest of disk
MBR/GPT	• RCW • U-Boot or UEFI • PPA firmware	• BOOTAA64.EFI , grub.cfg • or for other uses	• kernel • dtb	Backup partition or Second distro	LSDK Userland (Default)

Table continues on the next page...

Table 21. The default layout of SD/USB/SATA storage device for LSDK distro images deployment (continued)

	• QE/uQE firmware • FMan firmware • MC firmware • DPL & DPC firmware • DTB • lsdk_linux.itb		• distro boot scripts • secure boot headers • composite firmware • lsdk_linux_arm64_tiny.itb • rootfs_lsdk_yocto_tiny.cpio.gz		

The default layout of target disk is done as per default "-p 4P=100M:2G:5G:-1", if different layout is needed, you can specify '-p' option in flex-installer command, e.g. flex-installer -i auto -p 4P=50M:2G:100M:-1 -m ls1046ardb -d /dev/mmcblk0. Once you changed the default partitions, it needs to set u-boot env variable *devpart_boot* for boot partiton (devpart_boot=2 by default) and *devpart_root* for rootfs partition (devpart_root=4 by default in distro boot script <board>_boot.scr), for example, you can run '*setenv devpart_root 3; saveenv; boot*' in U-Boot prompt to boot the target distro from partition 3 instead from the default partition 4.

If you want to change the default bootargs for kernel, you can do 'setenv *othbootargs* <your_new_settings>' in U-Boot prompt to append extra bootargs option, then do '*saveenv; boot*' to boot distro.

LSDK userland

LSDK supports different types of distro userland in various scale to adapt to a variety of use cases, Ubuntu-based rich OS userland and Yocto-based tiny userland are supported by default.

To boot large distro from default storage device under U-Boot:

```
=> boot
```

To boot large distro from specified USB/SATA/SD storage device under U-Boot:

```
=> run bootcmd_usb0 (or run bootcmd_mmc0, run bootcmd_mmc1, run bootcmd_scsi0, etc)
```

To boot Tiny distro under U-Boot:

```
=> run sd_bootcmd (or run nor_bootcmd or run qspi_bootcmd or run xspi_bootcmd for various boot type)
```

The default LSDK main userland is an Ubuntu 18.04 based hybrid userland with NXP's packages/components and system configurations. You can select the appropriate distro userland as per your need, the various userlands are showed in the following table.

LSDK Userland	Userland tarball Name	Size	Commands for build	Description
Ubuntu-based **main** userland	rootfs_lsdk2004_ubuntu_main_arm64.tgz	~700 M	$ flex-builder -i mkrfs -r ubuntu:main	Include Ubuntu 18.04 main packages and full NXP's packages for Layerscape platforms.
Ubuntu-based **lite** userland	rootfs_lsdk2004_ubuntu_lite_arm64.tgz	~180 M	$ flex-builder -i mkrfs -r ubuntu:lite	Include Ubuntu 18.04 base packages and part of NXP's packages (restool, aiop_tool, tsntool, fmc, net-tools, flex-installer, ccsr, etc).

Table continues on the next page...

Table continued from the previous page...

LSDK Userland	Userland tarball Name	Size	Commands for build	Description
Ubuntu-based **mate** userland	rootfs_lsdk2004_ubuntu_mate_arm64.tgz	~1.7G	$ flex-builder -i mkrfs -r ubuntu:mate	Include Ubuntu mate packages and part of NXP's packages (wayland, weston, libdrm, gpulib, etc), applicable to platforms integrating GPU (e.g. LS1028A, i.MX).
Ubuntu-based **devel** userland	rootfs_lsdk2004_ubuntu_devel_arm64.tgz	~830 M	$ flex-builder -i mkrfs -r ubuntu:devel	Include Ubuntu 18.04 main & universe packages and full NXP's packages for Layerscape platforms.
Yocto-based **tiny** userland	rootfs_lsdk2004_yocto_tiny_arm64.tgz	~20M	$ flex-builder -i mkrfs -r yocto:tiny	Include Yocto basic packages and part of NXP's packages (restool, aiop_tool, tsntool, fmc, net-tools, flex-installer, ccsr, etc).
Yocto-based **devel** userland	rootfs_lsdk2004_yocto_devel_arm64.tgz	~370 M	$ flex-builder -i mkrfs -r yocto:devel	Include Yocto basic & development packages and part of NXP's packages (dpdk, ovs-dpdk, openssl, restool, aiop_tool, tsntool, fmc, net-tools, flex-installer, ccsr, etc).
CentOS-based userland	rootfs_lsdk2004_centos_7.7.1908_arm64.tgz	~970 M	$ flex-builder -i mkrfs -r centos	Include CentOS packages and NXP's packages.

If you want to build specific userland from source, please refer to the section "How to build LSDK with Flexbuild" -> "How to build various userland with custom packages" for the detailed steps to build various userland.

All the apt packages in the prebuilt LSDK main userland are from Ubuntu main repository which are legally reviewed as trusted origin by NXP. You can install more apt packages by sudo apt install <package-name> command by yourself. NXP will not undertake legal liability if you publically distribute distro which contains packages from untrusted origin. Some helpful packages (e.g. gstream, linuxptp, etc) from Ubuntu non-main repo are listed in /usr/local/bin/post-install-pkg.sh to facilitate automation installation by running 'post-install-pkg.sh' if needed. You can use the following commands to check LSDK userland version, build infomation and default prebuilt packages:

```
root@localhost:~# $ cat /etc/issue
NXP LSDK 2004 main

$ cat /etc/buildinfo
 NXP LSDK 2004 (based on ubuntu) arm64 main
 Build: 2020-02-24 19:09:01
 Bootloader Version: U-Boot 2019.10-gca8f2380a2

$ cat /etc/packages.list
NXP LSDK App Component Package List:
restool flib fmlib fmc spc cst openssl dpdk ovs_dpdk pktgen_dpdk aiopsl ceetm dce eth_config
gpp_aioptool qbman_userspace crconf iperf cjson tsntool wayland wayland_protocols gpulib libdrm
weston docker_ce
APT Packages List:
Package  Version         Download-Size   APT-Sources
libfile-listing-perl 6.04-1 9,774 B <http://us.ports.ubuntu.com/ubuntu-ports bionic/main>
acl 2.2.52-3build1 35.8 kB <http://us.ports.ubuntu.com/ubuntu-ports bionic/main>
adduser 3.116ubuntu1 163 kB <http://us.ports.ubuntu.com/ubuntu-ports bionic/main>
apt 1.6.12 1,165 kB <http://us.ports.ubuntu.com/ubuntu-ports bionic-updates/main>
```

```
apt-utils 1.6.12 199 kB <http://us.ports.ubuntu.com/ubuntu-ports bionic-updates/main>
```

4.3 How to build LSDK with Flexbuild

Users can directly deploy the prebuilt LSDK distro images with `flex-installer`. If users want to build LSDK from source to customize LSDK images, `flex-builder` can be used to modify source code of components or default configurations to generate custom distro images.

Flexbuild is a component-oriented build framework and integrated platform with capabilities of flexible, easy-to-use, scalable system build and distro installation. With flex-builder CLI tool, users can build various components (linux, u-boot, uefi, rcw, TF-A and miscellaneous custom userspace applications) and distro userland to generate composite firmware, hybrid rootfs with customable userland. The following are Flexbuild's main features:

- Automatically build Linux, bootloader, miscellaneous user-space components and various Root File Systems (based on Ubuntu, Debian, CentOS, Yocto, Buildroot, etc).
- Generate machine-specific composite firmware for various boot types: SD/QSPI/XSPI/NOR/NAND normal boot and secure boot based on U-Boot or UEFI as bootloader.
- Support repo integrated management with commands of repo-fetch, repo-branch, repo-commit, repo-tag, repo-update for all components.
- Support cross build on x86 Ubuntu 18.04 host machine for aarch64/armhf target.
- Support native build on aarch64/armhf machine for Arm arch target.
- Support creating an Ubuntu docker container and building LSDK inside it when the host machine is using CentOS, RHEL, Fedora, SUSE, Debian, non-18.04 Ubuntu, etc.
- Scalability of integrating various components of both system firmware and user space applications.
- Capability of generating custom aarch64/armhf NXP LSDK userland integrated configurable packages and proprietary components.

Flexbuild can separately build each component or automatically build all components, it generates the composite firmware (containing RCW, U-Boot/UEFI, PHY firmware, kernel image, dtb, initrd) and NXP LSDK userland (containing the specified packages and application components).

NOTE

Since LSDK-18.06, upgrading of toolchain is required for U-Boot v2018.03 or later, if your host machine is not an Ubuntu 18.04 system, there are two ways to upgrade as below:

- Run 'sudo do-release-upgrade' command to upgrade existing Ubuntu 16.04 to Ubuntu 18.04
- Run 'flex-builder docker' command on the existing non Ubuntu 18.04 host to create a ubuntu 18.04 docker container in which GCC 7.4.0 is available, then build LSDK in docker.

This section introduces detailed steps to build LSDK with Flexbuild.

How to download Flexbuild

Go to Downloads tab at www.nxp.com/lsdk. Download Layerscape Software Development Kit - <version>. Enter login details, accept the agreement to download the flexbuild source tarball in the name format flexbuild_<version>.tgz

```
$ tar xvzf flexbuild_<version>.tgz
$ cd flexbuild_<verison>
$ source setup.env
$ flex-builder -h
```

How to automatically build LSDK

Generally, users can directly deploy the prebuilt LSDK composite firmware and distro userland to storage device on target board by *flex-installer*, in case you want to build custom images with different configurations instead of the default settings, for example, you can specify different rcw_<boottype> in <flexbuild_dir>/configs/board/<machine>/manifest to replace the default RCW, you can modify source code of various components (RCW, U-Boot, ATF, linux, app components, etc) or choose different branch/tag of components by setting <component>_repo_branch or <component>_repo_tag in <flexbuild_dir>/configs/build_lsdk.cfg if necessary, finally, you can run the following command to automatically build LSDK in single command.

```
- To automatically build all images (generating LSDK composite firmware, Linux kernel, app
components, bootpartition, rootfs, etc) for specific machine
  Usage:   flex-builder -m <machine>
           the <machine> can be: ls1012ardb, ls1012afrwy, ls1021atwr, ls1028ardb, ls1043ardb,
ls1046ardb, ls1046afrwy, ls1088ardb_pb, ls2088ardb, ls2160ardb, etc.
  Example: flex-builder -m ls1046ardb

- To automatically build all images for all Layerscale machines in <arch> architecture
  Usage:   flex-builder -i auto -a <arch>
           the <arch> can be: arm32, arm64

- To automatically build all images for both arm32 and arm64 all Layerscale machines
  Usage:   flex-builder all

Optionally, users can change the default build options in <flexbuild-dir>/configs/build_lsdk.cfg to
enable/disable some build features.
For example, you can enable/disable some app components by setting CONFIG_APP_<component_name>=y/n
on demand.
```

How to generate LSDK composite firmware

LSDK composite firmware consists of RCW/PBL, ATF, Bootloader(U-Boot or UEFI), secure headers, Ethernet MAC/PHY firmware, dtb, kernel and tiny initrd RFS. The composite firmware can be programmed at offset 0x0 in flash device or at offset block# 8 in SD/eMMC card.

```
Usage:
$ flex-builder -i mkfw -m <machine> -b <boottype> [-B <bootloader>] [-s]

Examples:
$ flex-builder -i mkfw -m ls1043ardb -b sd
  firmware_ls1043ardb_uboot_sdboot.img will be generated.

$ flex-builder -i mkfw -m lx2160ardb -b xspi -s
  firmware_lx2160ardb_uboot_xspiboot_secure.img will be generated.

$ flex-builder -i mkfw -m ls1046ardb -b qspi -B uefi
  firmware_ls1046ardb_uefi_qspiboot.img will be generated.

$ flex-builder -i mkfw -m ls2088ardb -b nor
  firmware_ls2088ardb_uboot_norboot.img will be generated.

$ flex-builder -i mkfw -m ls2088ardb -b nor -s
  firmware_ls2088ardb_uboot_norboot_secure.img will be generated for secure boot.

$ flex-builder -i mkfw -m lx2160ardb_rev2 -b xspi
  firmware_lx2160ardb_rev2_uboot_xspiboot.img will be generated.
```

How to build TF-A with RCW and U-Boot/UEFI

Layerscape platforms support TF-A (Trusted Firmware-A) which provides a reference implementation of secure world software for Armv7-A and Armv8-A.

`flex-builder` can automatically build the dependent RCW, U-Boot/UEFI, OPTEE, and CST to generate TF-A binaries, `bl2.pbl` and `fip.bin` images for Layerscape platforms..

Use the commands below to build ATF with RCW and U-Boot/UEFI in Flexbuild.

```
Usage: flex-builder -c atf -m <machine> -b <boottype> [-s]
Example:
$ flex-builder -c atf -m ls1043ardb -b sd          (build uboot-based ATF image for SD boot)
$ flex-builder -c atf -m ls1046ardb -b qspi -s     (build uboot-based ATF image for QSPI-NOR
secure boot)
$ flex-builder -c atf -m lx2160ardb -b xspi        (build uboot-based ATF image for FlexSPI-NOR boot)
$ flex-builder -c atf -m ls2088ardb -b nor -B uefi (build uefi-based ATF image for IFC-NOR boot)
```

NOTE

If you want to use different RCW instead of the default one, you can reconfigure `rcw_<boottype>` variable in `<flexbuild>/configs/board/<machine>/manifest`, then run `flex-builder -i clean-firmware; flex-builder -c atf -m <machine> -b <boottype>` to generate new ATF image with the specified RCW, if you modified U-Boot, RCW or ATF source code, flex-builder can automatically recompile them with the modified source.

NOTE

The '-s' option is used for secure boot, OPTEE and FUSE_PROVISIONING are not enabled by default, change CONFIG_BUILD_OPTEE=n to y and/or change CONFIG_FUSE_PROVISIONING=n to y in configs/build_lsdk.cfg to enable it if necessary.

How to build Linux kernel with flex-builder

Besides building LSDK kernel in stand-alone way (see Configuring and building), it is easy to automatically build LSDK kernel with flex-builder.

To build kernel using the default tree/branch/tag configurations specified in configs/build_lsdk.cfg:

```
$ flex-builder -c linux -a arm64  (for all Layerscale arm64 platforms)
$ flex-builder -c linux -a arm32  (for arm32 platform, e.g. ls1021atwr)
```

To build kernel with specified tree/branch/tag and additional fragment config:

```
Usage:  flex-builder -c linux:<kernel-repo>:<branch|tag> [ -a arm64 -B fragment:<custom>.config ]
Example:
$ flex-builder -c linux:dash-lts:linux-5.4 -a arm64 -B fragment:lttng.config
$ flex-builder -c linux:linux:LSDK-20.04-V4.14 -a arm32
$ flex-builder -c linux:linux:LSDK-20.04-V5.4 -a arm64
```

User can put a custom kernel fragment config file (given named test.config) in flexbuild/packages/linux/<kernel-repo>/arch/arm64/configs directory, then run the command below to compile kernel as per the default defconfig, lsdk.config and the additional test.config.

```
$ flex-builder -c linux -a arm64 -B fragment:test.config
```

To build kernel with custom kernel options in interactive menu:

```
Step1: Use 'custom' option to customize kernel .config in interactive menu
$ flex-builder -c linux:custom -a arm64

Step2: Continue to build kernel with the customized .config generated in Step1
$ flex-builder -c linux -a arm64
```

Platform	Command for building Linux

Armv8 64-bit
LS1012ARDB
LS1012AFRWY
LS1028ARDB
LS1043ARDB
LS1046ARDB
LS1046AFRWY
LS1088ARDB-PB
LS2088ARDB
LX2160ARDB
	$ flex-builder -c linux:custom (optional, customize kernel .config in interactive menu)
	$ flex-builder -c linux
	Optionally, you can specify kernel repo name and specific branch/tag name as below:
	$ flex-builder -c linux:<kernel-repo>:<branch|tag> -B fragment:<custom>.config
	Example:
	$ flex-builder -c linux:linux:LSDK-20.04-V5.4
	(if '-a <arch>' is not specified, arm64 arch is used by default)

Armv7 32-bit LS1021ATWR	$ flex-builder -c linux:custom -a arm32 (optional, customize kernel config in interactive menu) $ flex-builder -c linux -a arm32

How to build linux itb based on custom kernel and various distro

1. Optionally, you can modify kernel source in `<flexbuild_dir>/packages/linux/linux` or change the default branch/tag, then build custom kernel as below:

```
$ flex-builder -c linux -a arm64
```

2. Optionally, the prebuilt `rootfs_<lsdk_version>_yocto_tiny_arm64.cpio.gz` is used for generating itb image by default, you can refer to section "How to build LSDK with Flexbuild" -> "How to build various userland with custom packages" to customize your userland.
3. Run the following commands to generate linux itb.

```
$ flex-builder -i mkitb -r <distro_type>:<distro_scale> -a <arch>
   For example:
   $ flex-builder -i mkitb -r yocto:tiny  -a arm64
   $ flex-builder -i mkitb -r yocto:devel -a arm32
   $ flex-builder -i mkitb -r ubuntu:lite -a arm64
   $ flex-builder -i mkitb -r ubuntu:main -a arm64
```

4. Load the generated itb to the RAM on the target board and boot the board.

```
=> tftp $load_addr <itb_img>
=> bootm $load_addr#<board_name>
```

How to generate LSDK boot partition tarball

The boot partition includes kernel image, DTB, distro boot script, secure boot headers, tiny initrd etc. flex-builder automatically builds the dependent images if they are not present, after modifying kernel source or config, you can run the command as below to generate bootpartition_LS_arm64_lts_<version>.tgz tarball to be used for LSDK deployment.

```
$ flex-builder -i mkbootpartition -a arm64  (for normal boot)
or
$ flex-builder -i mkbootpartition -a arm32  (for normal boot)
or
$ flex-builder -i mkbootpartition -a arm64 -s (for secure boot)
```

```
or
$ flex-builder -i mkbootpartition -a arm32 -s (for secure boot)
or
$ flex-builder -i mkbootpartition -a arm64 -s -t (for secure boot with IMA-EVM)
or
$ flex-builder -i mkbootpartition -a arm32 -s -t (for secure boot with IMA-EVM)
```

How to build application components in Flexbuild

The following commands are some examples of building application components.

```
Usage:  flex-builder -c <component-name> -a <arch>
Example:
$ flex-builder -c apps               # build all arm64 apps components against Ubuntu-based main
userland by default
$ flex-builder -c apps -r yocto:devel # build all arm64 apps components against Yocto-based
devel userland
$ flex-builder -c edgescale     # build EdgeScale client components for arm64 arch
$ flex-builder -c dpdk          # build DPDK component for Layerscape platforms
$ flex-builder -c ovs_dpdk      # build OVS-DPDK component
$ flex-builder -c pktgen_dpdk   # build PKTGEN-DPDK component
$ flex-builder -c vpp           # build VPP component
$ flex-builder -c fmc -a arm32  # build FMC component for arm32 arch
$ flex-builder -c fmc -a arm64  # build FMC component for arm64 arch
$ flex-builder -c restool       # build RESTOOL component for arm64 arch,
$ flex-builder -c tsntool       # build tsntool component
(arm64 is the default arch if -a <arch> is not specified)
```

To add new application component in Flexbuild, follow the steps below:

1. Add new <component> to apps_repo_list and set CONFIG_BUILD_<component>=y in configs/build_xx.cfg.
2. Configure url/branch/tag/commit info for new <component_name>in configs/build_xx.cfg, default remote. Component git repository is specified by GIT_REPOSITORY_URL by default if <component>_url is not specified, user also can directly create the new component git repository in packages/apps directory.
3. Add build support of new component in packages/apps/Makefile..
4. Run flex-builder -c <component-name> -a <arch>' to build the new component.
5. Run flex-builder -i merge-component -a <arch> to merge the new component package into target distro userland.

How to replace the default Linux kernel with custom kernel on target board

You can customize LSDK kernel and quickly replace the existing kernel with your custom kernel on SD card on target Arm board in case of non secure boot according to the steps below.

Step1: Optionally, run 'flex-builder -i repo-fetch -B linux' to download linux source, then modify Linux kernel source code in <flexbuild_dir>/packages/linux/<kernel-repo>

Step2: Optionaly, customize kernel options in interactive menu by command "*flex-builder -c linux:custom -a arm64*"

Step3: Build new kernel by command "*flex-builder -c linux -a arm64*"

Step4: Generate new linux tarball by command "*flex-builder -i mkbootpartition -a arm64*"

The new kernel tarball <flexbuild-dir>/build/images/linux_5.4_LS_arm64_<timestamp>.tgz will be generated.

Step5: Login LSDK Linux system on target board and replace the existing kernel as below:

```
root@localhost:/# dhclient -i <port_name>
root@localhost:/# wget <webserver_path>/linux_5.4_LS_arm64_<timestamp>.tgz (or by scp command)
```

```
root@localhost:/# tar xfmv linux_5.4_LS_arm64_<timestamp>.tgz -C /
root@localhost:/# reboot
```

System will reboot and automatically boot to LSDK Linux system with the newly custom kernel.

How to deploy new images after modifying the source code of NXP components locally

Step1: Clean the old apps images as below

```
$ flex-builder -i clean-apps -a arm64
$ make clean -C packages/apps/<component_name>
```

Step2: Modify component source code in directory packages/apps/<component-name> on demand

Step3: Build the component and generate the compressed app component tarball

```
$ flex_builder -c <component-name> -a arm64 (or run 'flex_builder -c apps' for building
all components)
$ flex-builder -i packapps -a arm64
```

Step4: Login LSDK Linux system on target board, download app_components_LS_arm64.tgz and replace the existing app component as below

```
root@localhost:/# wget <webserver_path>/app_components_LS_arm64.tgz (or by scp command)
root@localhost:~# tar xfm app_components_LS_arm64.tgz -C /
root@localhost:~# reboot
```

How to add new app component in Flexbuild

1. Add a new `CONFIG_APP_<component>=y` and configure `<component>_repo_url` and `<component>_repo_branch` in `configs/build_lsdk.cfg`. Or, you can directly create the new component git repository in `packages/apps/<category>/<component>`.
2. Add make object in `packages/apps/<category>/<category>.mk`, this is applicable to component, which uses either Make build system or non Make build system (For example, cmake, meson, ninja).
3. Run `flex-builder -c <component> -a <arch>` to build new component.
4. Run `flex-builder -i merge-component -a <arch>` to merge new component package into distro userland.
5. Run `flex-builder -i packrfs -a <arch>` to pack the target distro userland for deployment.

> **NOTE**
>
> `-r <distro_type>:<distro_scale>` can be specified if needed, `-r ubuntu:main`, by default. In case you just need to integrate a few simple source files which are not in a git repository, you can put them under `packages/apps/generic` directory and add make object in `packages/apps/generic/generic.mk`.

How to build various userland with custom packages

LSDK supports different types of distro userland in various scale to adapt a variety of use cases, you can select the appropriate distro userland as per your need.

- **LSDK Ubuntu-based Main Userland**

The LSDK default main userland consists of Ubuntu main packages and NXP's packages, which can be generated by the following steps:

a. Optionally, you can add new package or remove package to/from "additional_main_packages_list" in <flexbuild_dir>/configs/ubuntu/additional_packages_list, flex-builder can install these packages specified by additional_main_packages_list into target arm64/arm32 userland.

```
$ flex-builder -i clean-rfs  (optionally, clean previously generated build/rfs/
rootfs_lsdk2004_ubuntu_main_arm64 userland)
```

You can change the default FETCH_PREBUILT_LSDK_RFS=y to n in <flexbuild_dir>/configs/build_lsdk.cfg to build main userland from scratch instead of fetching the prebuilt userland.

b. Run the following commands to build main userland and bootpartition

```
$ flex-builder -i mkrfs           (generate build/rfs/rootfs_lsdk2004_ubuntu_main_arm64 userland)
$ flex-builder -c apps            (build app components against main userland)
$ flex-builder -i merge-component (merge app components to main userland)
$ flex-builder -i packrfs         (pack target userland
as rootfs_lsdk2004_ubuntu_main_arm64.tgz,~700M)
$ flex-builder -i mkbootpartition (generate bootpartition_LS_arm64_lts_5.4.tgz)
```

c. Plug an SD card or USB/SATA disk onto your host machine or Arm board and install main userland and bootpartition tarballs as below:

```
$ flex-installer -b bootpartition_LS_arm64_lts_5.4.tgz -r rootfs_lsdk2004_ubuntu_main_arm64.tgz -
d /dev/sdx
```

- **LSDK Ubuntu-based Lite Userland**

The LSDK Ubuntu-based lite userland consists of Ubuntu basic packages and a few NXP's packages, which can be generated by the following steps:

a. Optionally, you can add new package name to "additional_lite_packages_list" in <flexbuild_dir>/configs/ubuntu/additional_packages_list

```
$ flex-builder -i clean-rfs -r ubuntu:lite      (clean old
build/rfs/rootfs_lsdk2004_ubuntu_lite_arm64)
```

b. Run the following commands to build target userland

```
$ flex-builder -i mkrfs -r ubuntu:lite           (generate rootfs_lsdk2004_ubuntu_lite_arm64
target userland)
$ flex-builder -i mkbootpartition                (generate bootpartition_LS_arm64_lts_5.4.tgz)
$ flex-builder -i merge-component -r ubuntu:lite (merge app components to lite userland)
$ flex-builder -i packrfs -r ubuntu:lite         (pack userland
as rootfs_lsdk2004_ubuntu_lite_arm64.tgz,~180M)
```

c. Plug an SD card or USB/SATA disk onto your host machine or Arm board, then install Lite userland as below:

```
$ flex-installer -b bootpartition_LS_arm64_lts_5.4.tgz -r rootfs_lsdk2004_ubuntu_lite_arm64.tgz -
d /dev/sdx
```

- **LSDK Ubuntu-based Mate Desktop Userland**

The LSDK Ubuntu-based Mate desktop userland consists of Ubuntu Mate packages and some NXP's packages for platforms with GPU (e.g. LS1028A, i.MX), which can be generated and deployed by the following steps:

a. Run the following commands to generate mate userland

```
$ flex-builder -i mkrfs -r ubuntu:mate           (generate rootfs_lsdk2004_ubuntu_mate_arm64 userland)
$ flex-builder -c apps -r ubuntu:mate            (build app components against mate userland)
```

```
$ flex-builder -i merge-component -r ubuntu:mate (merge app components to ubuntu mate userland)
$ flex-builder -i packrfs -r ubuntu:mate         (pack userland
as rootfs_lsdk2004_ubuntu_mate_arm64.tgz,~1.9G)
$ flex-builder -i mkbootpartition                (generate bootpartition_LS_arm64_lts_5.4.tgz)
```

b. Install LSDK Mate userland to SD card or USB/SATA disk

SD card Class 10 (or higher speed) or USB 3.0 disk is recommended to install Mate userland for better user experience.

```
$ flex-installer -b bootpartition_LS_arm64_lts_5.4.tgz -r rootfs_lsdk2004_ubuntu_mate_arm64.tgz -
d /dev/sdx
```

-**LSDK Yocto-based Tiny and Devel Userland**

The LSDK tiny userland consists of basic packages (curl, devmem, scp, wget, parted, arp, udhcpc, etc) and part of NXP's packages (flex-installer, restool, aiop_tool, tsntool, fmc, cjson, ccsr, etc), which can be generated and deployed by the following steps:

a. Optionally, you can add new packages or remove native packages to/from "IMAGE_INSTALL_append" in <flexbuild-dir>/configs/yocto/local_arm64_tiny.conf on demand, you can add recipes for custom package in <flexbuild_dir>/packages/rfs/misc/yocto/recipes-support directory, or you can add your own app component in <flexbuild_dir>/packages/apps/Makefile to integrate it into Yocto userland according to your need.

b. Run the following commands to generate tiny userland and boot partition tarball:

```
$ flex-builder -i clean-rfs -r yocto       (clean obsolete cache data, this step is needed in case
source/config is changed)
$ flex-builder -i mkrfs -r yocto:tiny      (generate rootfs_lsdk2004_yocto_tiny_arm64.cpio.gz,~22M)
$ flex-builder -i mklinux -r yocto:tiny    (generate lsdk2004_yocto_tiny_LS_arm64.itb)
$ flex-builder -i mkfw -m ls1046ardb -b sd (generate firmware_ls1046ardb_uboot_sdboot.img,for example)
$ flex-builder -i mkbootpartition          (generate bootpartition_LS_arm64_lts_5.4.tgz)
```

c. Plug an SD card or USB/SATA disk onto your host machine or Arm board and install tiny userland as below

```
$ flex-installer -b bootpartition_LS_arm64_lts_5.4.tgz -r rootfs_lsdk2004_yocto_tiny_arm64.tgz -f
firmware_ls1046ardb_uboot_sdboot.img -d /dev/sdx
```

You can quickly load lsdk_linux_arm64_LS_tiny.itb under U-Boot prompt and boot it on target board as below:

```
=> tftp $load_addr <tftp_path>/lsdk_linux_arm64_LS_tiny.itb
=> bootm $load_addr#<machine_name>
here <machine_name> can be ls1012ardb, ls1012afrwy, ls1028ardb, ls43ardb, ls1046ardb, ls1046afrwy,
ls1088ardb, ls2088ardb, lx2160ardb, etc
```

If you want to build a larger Yocto-based userland with more packages for development, you can select '**devel**' as below:

```
$ flex-builder -i mkrfs -r yocto:devel -a arm64
(generate rootfs_lsdk2004_yocto_devel_arm64.cpio.gz,~370M)
$ flex-builder -i mklinux -r yocto:devel -a arm64 (generate lsdk_linux_arm64_LS_devel.itb)
```

- **LSDK CentOS-based Userland** (optional)

The LSDK CentOS-based userland consists of CentOS packages and some NXP's packages, which can be generated by the following steps:

a. Optionally, clean obsolete image build/rfs/rootfs_lsdk2004_centos_7.7.1908_arm64

```
$ flex-builder -i clean-rfs -r centos
```

b. Run the following commands to build target CentOS userland

```
$ flex-builder -i mkrfs -r centos -a arm64       (generate rootfs_lsdk2004_centos_7.7.1908_arm64
target userland)
$ flex-builder -i mkbootpartition -a arm64       (generate bootpartition_LS_arm64_lts_5.4.tgz)
$ flex-builder -i merge-component -r centos      (merge app components to CentOS userland)
$ flex-builder -i packrfs -r centos -a arm64     (pack userland
as rootfs_lsdk2004_centos_7.7.1908_arm64.tgz,~970M)
```

c. Plug an SD card or USB/SATA disk onto your host machine or ARM reference board, then install target userland as below:

```
$ flex-installer -b bootpartition_LS_arm64_lts_5.4.tgz -r rootfs_lsdk2004_centos_7.7.1908_arm64.tgz
-d /dev/sdx
```

4.4 How to upgrade the existing LSDK distro with Flexbuild on host

To only update bootpartition (with customized kernel and modules) on SD card connected to host machine or target ARM board:

```
$ flex-installer -b bootpartition_LS_arm64_lts_5.4.tgz -d /dev/mmcblk0 (or /dev/sdx)
```

To only update rootfs tarball or apps tarball (with customized packages) on SD card connected to host machine or target ARM board:

```
$ flex-installer -r rootfs_<sdk_version>_ubuntu_arm64.tgz -d /dev/mmcblk0 (or /dev/sdx)
or
$ flex-installer -r app_components_LS_arm64_ubuntu.tgz -d /dev/mmcblk0 (or /dev/sdx)
```

To update both bootpartition and rootfs on SD card connected to host machine or target ARM board:

```
$ flex-installer -b <bootpartition> -r <rootfs> -d /dev/mmcblk0 (or /dev/sdx)
```

As some of LSDK components are updated monthly after a formal LSDK release, users can upgrade the existing LSDK with the steps below to simplify the procedure of building and deploying the updated version of LSDK from scratch.

Step 1: Download and extract the newly updated flexbuild tarball to the existing flexbuild_<lsdk_version> directory

```
$ tar xvzf flexbuild_<version>_update_<date>.tgz --strip-components 1 -
C <existing_flexbuild_directory>
$ cd <existing_flexbuild_directory>
$ source setup.env
$ flex-builder -i repo-tag      # automatically switch to new tags of components
```

Step 2: Build LSDK with the updated flexbuild

```
$ flex-build -i clean           # clean obsolete images if needed
$ flex-build -m <machine>       # automatically build all images for specific <machine>
or
$ flex-build -i mkfw -m <machine> -b <boottype>  # only build composite firmware
or
flex-build -c apps              # only build all apps components
or
flex-build -c <component>       # only build single <component>
or
flex-build -c linux             # only build linux kernel
```

Step 3: Push the newly generated images to remote target board

1. Boot the existing LSDK distro on target ARM board and configure IP address by static address or DHCP

2. Run commands below on host to generate new image and push it to target board
   a. To upgrade kernel and modules

```
$ flex-builder connect <IP_address>
$ flex-builder -i clean-linux                      # clean obsolete kernel image
if necessary
$ flex-builder -c linux                            # build kernel, or '-c
linux:<kernel_repo>:<tag|branch> -a <arch>' to specify version
$ flex-builder push kernel <IP_address>         # push kernel and modules to target board
$ flex-builder disconnect <IP_address>          # disconnect the connection from
target board
```

   b. To upgrade single or multiple app component(s)

```
$ flex-builder connect <IP_address>
$ flex-builder -c <component>                      # build the specific component
$ flex-builder push app <IP_address>               # push app component to target board
$ flex-builder disconnect <IP_address>             # disconnect the connection from
target board
```

3. Reboot the target board to boot distro with the updated images.

If you want to upgrade composite firmware, follow the steps below:

1. For SD boot, first generate composite firmware by commmand 'flex-builder -i mkfw -m -b sd', then program it into SD card under U-Boot prompt, or program it by command 'flex-installer -f -d /dev/sdx' under Linux prompt.
2. For non SD boot, first generate composite firmware by commmand 'flex-builder -i mkfw -m -b nor|qspi|xspi', then program it into NOR|QSPI|FlexSPI flash device under U-Boot prompt.

Chapter 5
Bootloaders

5.1 Boot flow for hardware boards

5.1.1 General boot flow

NXP SoC Booting Principles

The high-level boot flow of an ARMv8-A SoC is:

1. SoC comes out of reset and reads RCW/PBL image from a boot source, such as a NOR flash, SD card, or eMMC flash. The RCW/PBL image contains configuration bits that control:
   - Pin muxing and the protocol selected for SerDes pins.
   - Clock parameters and PLL multipliers.
   - Device containing the first software (not in an internal Boot ROM) to run.
2. Code in the internal Boot ROM starts running and configures low-level aspects of the SoC.
3. The Boot ROM must then load the first external software to run from a boot device, such as NOR flash or SD/eMMC.
4. From LSDK 18.12 onwards, a new boot flow is introducted where a new software component, TF-A is introduced as a bootloader.
5. The Boot ROM transfers control to TF-A.

NOTE

For more details about TF- A, see Boot flow with TF-A.

6. TF-A loads and starts bootloader from NOR flash or SD/eMMC.
7. Usually, the bootloader must also load peripheral firmware, firmware required to make peripherals, such as Ethernet controllers work. The details of this differ from SoC to SoC.
8. When the bootloader finishes initialization, its job is to locate a Linux kernel image and a Linux device tree image. The device tree is a description of the board and SoC hardware that Linux uses, for example, to know which peripherals are available for use and to associate drivers with them. Often, bootloaders do some on-the-fly “fixups” to the device tree to pass information to Linux.

   NOTE

   For example, if you want to use PCIe device such as INTERL e1000 card in U-Boot or Linux, you can use command "pci enum" at the U-Boot prompt.

9. In summary, the bootloader reads kernel and device tree images from memory or mass storage device. Because bootloaders have many drivers, there are many possible choices for the location of the images.
   - NOR flash (serial QSPI or parallel)
   - NAND flash
   - SD card/eMMC flash
   - USB mass storage devices of all types
   - SATA drives of all types
   - Ethernet, normally via TFTP

10. After the bootloader loads the kernel and device tree and does fixups, it puts kernel boot parameters and the device tree into DDR where the kernel can find them and passes control to the kernel. One of the key kernel parameters is “root=”. It tells the Linux kernel what device contains the user space file set (user land). U-Boot stores kernel parameters in environment variable `bootargs`.
11. Because the Linux kernel supports even more device drivers than bootloaders support, the array of choices for the userland device is even larger.
    - NOR flash (serial QSPI or parallel)
    - NAND flash (using special file systems)
    - SD card/eMMC flash
    - USB mass storage devices of all types.
    - SATA drives of all types.
    - Ethernet, normally via NFS.
    - RAM disks (which the boot loader populates)
    - Third-party PCIe-based mass storage devices and controllers
        a. SATA controllers
        b. SAS controllers
        c. Fibre Channel Host Bus Adaptors
        d. NVMe cards
        e. And more.

Once the kernel is up, it starts userland, starting with `systemd`. The startup process is part of the Ubuntu file set and conforms to normal Ubuntu procedures.

Notes on General Boot Principles

- Secure boot does not change the overall sequence. The significant difference is that secure boot involves each component (starting with the Boot ROM) validating the images it loads and starts. This sequence of image validations is called the “chain of trust”.

Linux often resets peripherals and reloads their firmware. This process is specific to the SoCs.

5.1.2 Boot flow with PPA

Once the Boot ROM passes control to the first external software, following steps are followed in the boot flow with PPA:

1. In PPA boot flow, the first external software is either U-Boot or UEFI. For XIP (Execute in Place) boot devices, such as NOR flash, the bootloader runs directly from the XIP memory. However, for SD/eMMC, the bootloader is first loaded to OCRAM via Boot ROM or Hardware PBL block.
2. The Boot ROM transfers control to the bootloader.
3. The bootloader performs additional system configuration including:
    - DDR initialization
    - Platform interconnect settings
    - Any other configuration required in EL3/secure world
4. The bootloader then loads and starts the PPA image from NOR flash or SD/ eMMC.
5. PPA is a special resident firmware that runs at the highest ARMv8A privilege level EL3. It provides services to both bootloader and operating system. These services include controlling core power state and bringing additional cores out of reset.

6. PPA further loads and executes OPTEE (Trusted OS) if present and passes back control to bootloader which now runs in non-secure world.
7. U-Boot/UEFI is responsible to load and pass control to the kernel.

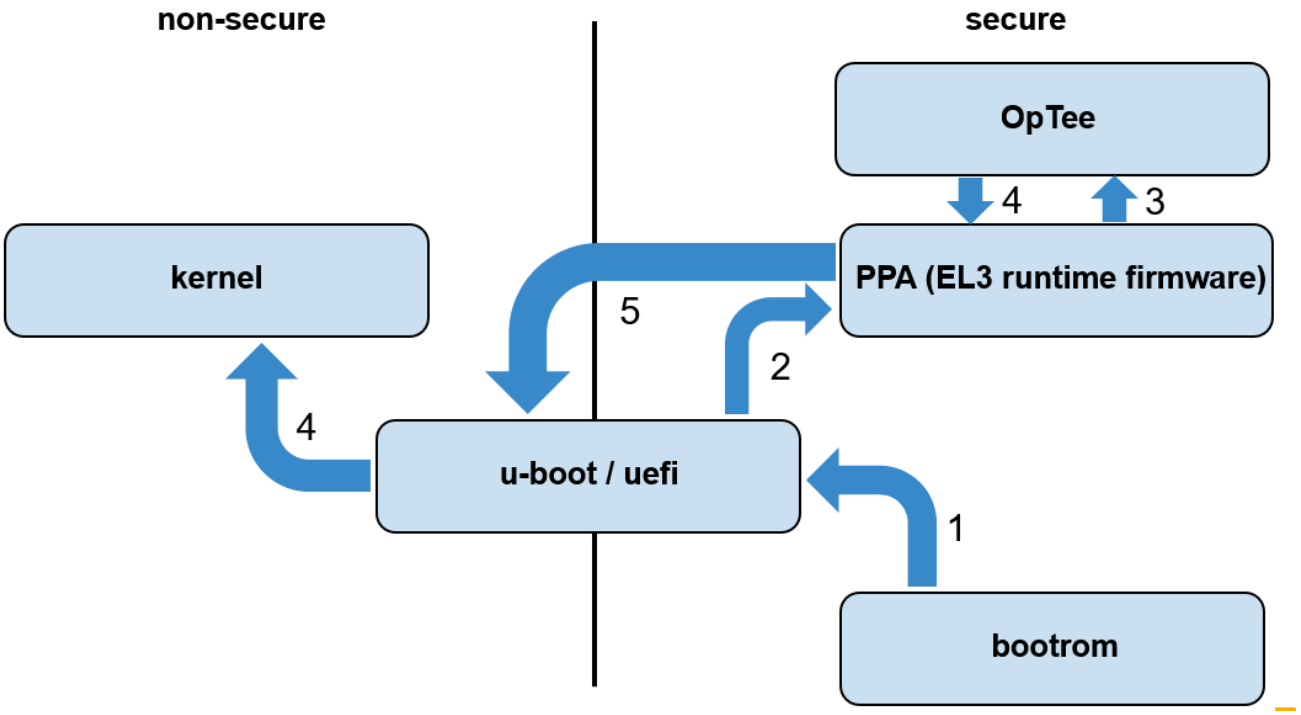

Figure 1. Boot flow with PPA

5.1.3 Boot flow with TF-A

Trusted Firmware (TF-A) is an implementation of secure world software for Armv8-A. TF-A provides trusted code base complying with the Arm specifications. The TF-A boot flow consists of 5 individual boot stages running at different exception levels, as explained in the following table.

Boot stage	Exception level	Description
BL1	EL3	Boot ROM firmware **NOTE** BL1 is embedded in hardware (Boot ROM + PBL commands)
BL2	EL3	Platform initialization firmware
BL31	EL3	Resident runtime firmware
BL32	EL1S	[Optional] Trusted operating system. For example, OP-TEE

Table continues on the next page...

Table continued from the previous page...

BL33	EL2	Normal world bootloader. For example, U-Boot, UEFI

The following table explains the TF-A and PPA boot flow for different hardware boards.

S.No	SoC	Boot flow	
		TF-A boot flow	PPA boot flow
1	LS1012A	Boot ROM -> BL2 -> BL31 ->U-boot/UEFI -> Linux	Boot ROM > U-Boot/UEFI> PPA > U-Boot/UEFI > Linux
2	LS1043A		
3	LS1046A		
4	LS1088A		
5	LS2088A		
6	LX2160A		NA

1. **Boot ROM (BL1)**
    a. When the CPU is released from reset, hardware executes PBL commands that copy the BL2 binary (`bl2.bin`) for platform initialization to OCRAM. The PBI commands also populate the BOOTLOC ptr to the location where `bl2.bin` is copied.
    b. Upon successful execution of the PBI commands, Boot ROM passes control to the BL2 image at EL3.
2. **BL2**
    a. BL2 initializes the DRAM, configures TZASC
    b. BL2 validates BL31, BL32, and BL33 images to the DDR memory after validating these images. BL31, BL32, and BL33 images form FIP image, `fip.bin`.
    c. Post validation of all the components of the FIP image, BL2 passes execution control to the EL3 runtime firmware image named as “BL31”,
3. **BL31**
    a. Sets up exception vector table at EL3
    b. Configures security related settings (TZPC)
    c. Provides services to both bootloader and operating system, such as controlling core power state and bringing additional cores out of reset
    d. [Optional] Passes execution control to Trusted OS (OP-TEE) image, BL32, if BL32 image is present.
4. **BL32**
    a. [Optional] After initialization, BL32 returns control to BL31.
5. **BL31**
    a. Passes execution control to bootloader U-Boot/UEFI, BL33 at EL2
6. **BL33**
    a. Loads and starts the kernel and other firmware (if any) images.

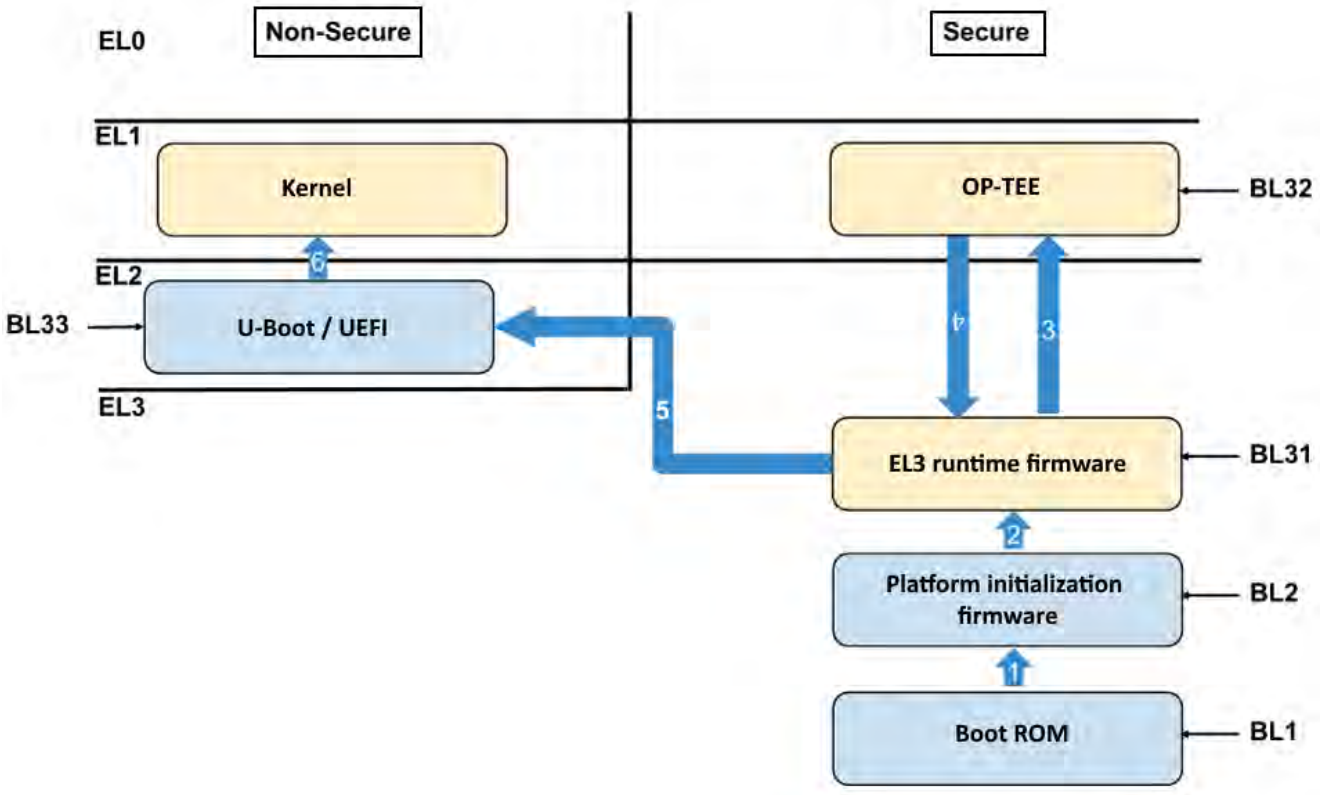

Figure 2. TF-A boot flow - stages

5.1.3.1 Secure boot with TF-A

Secure boot image validation is done using CSF headers for the images, generated using the Code signing tool. For details related to secure boot, refer to the section Secure boot. This section describes the TF-A based secure boot flow.

1. When SOC comes out of reset, control is transferred to BL1, which is responsible for validation of BL2 image using its CSF header added with the BL2 image itself. BL1 reads the BOOTLOC pointer value to locate the BL2 image CSF header and validates the image there after.
2. If the BL2 image is validated successfully, control is passed for its execution. BL2 image further validates the components of FIP image using their respective CSF headers. FIP image constitutes of following images:
   - CSF Header BL31 + BL31 image
   - CSF Header BL32 + BL32 image
   - CSF Header BL33 + BL33 image
3. BL33 (U-Boot/UEFI) is responsible to perform the validation of the next level firmware to establish the chain of trust.

NOTE

TF-A also support TBBR based secure boot validation. To enable this approach, refer to readme in ATF repository. Readme is located at: ~/atf/plat/nxp/README.TRUSTED_BOOT

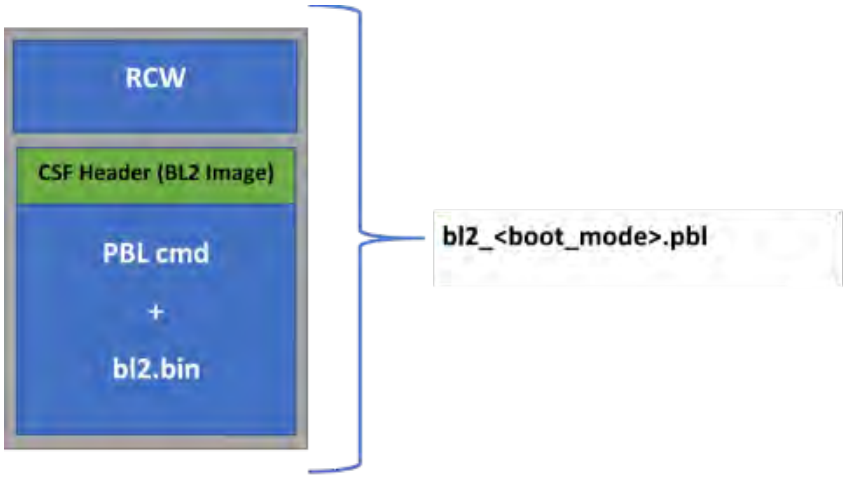

Figure 3. Secure boot bl2.pbl image

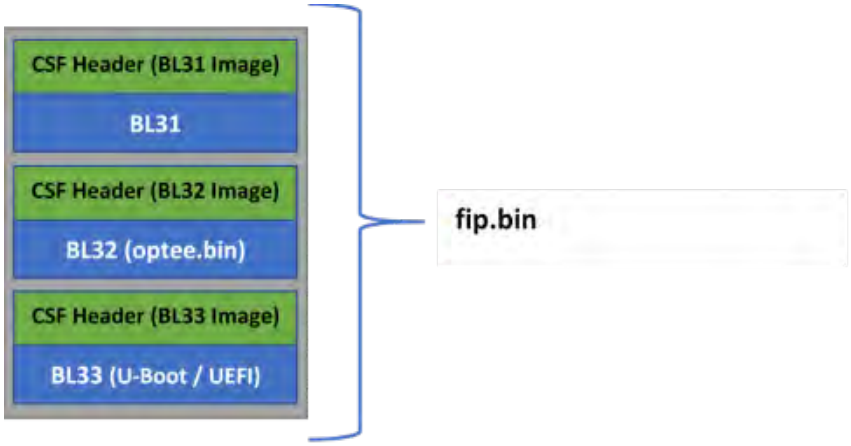

Figure 4. Secure boot fip.bin image

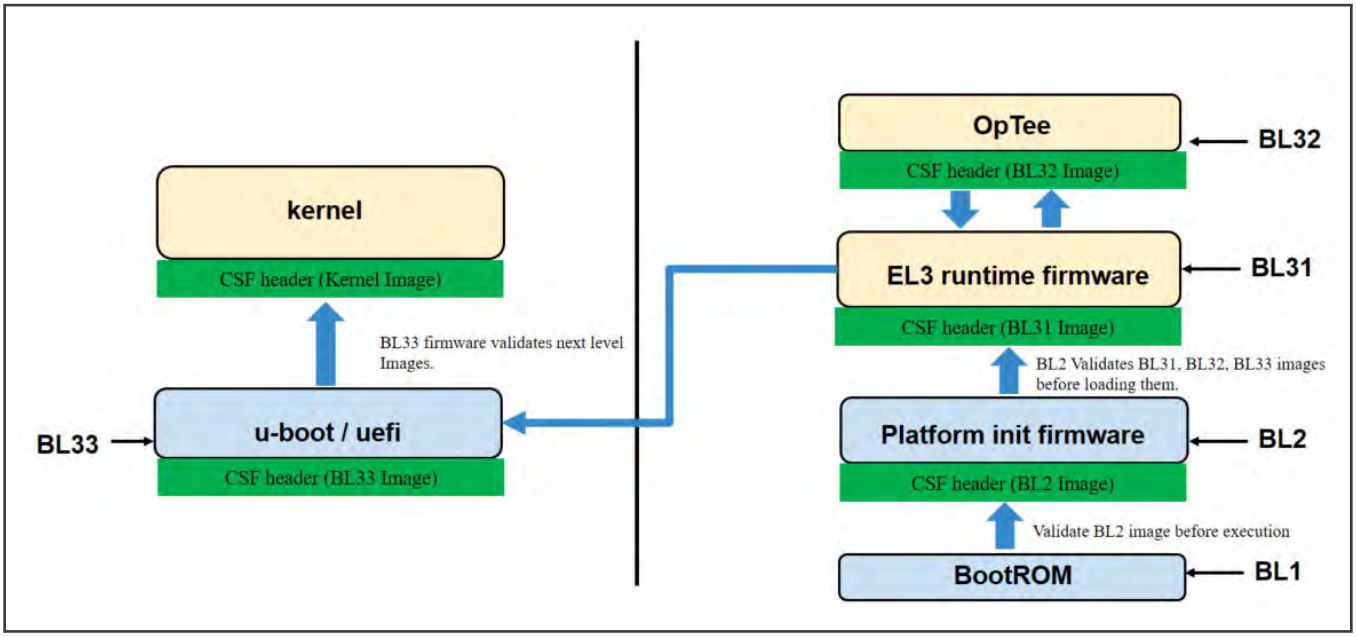

5.2 TF-A

5.2.1 Changes in flash layout

The following figure shows the flash layout for boot flow with PPA .

Definition	Max Size	NOR/QSPI/NAND	SD Card
RCW+PBI	1MB	0x00000000	0x00008
Boot firmware (U-Boot or UEFI)	2MB	0x00100000	0x00800
Boot firmware Environment	1MB	0x00300000	0x01800
PPA firmware	2MB	0x00400000	0x02000
Secure boot headers	3MB	0x00600000	0x03000

Figure 5. Flash layout for boot flow with PPA

The following figure shows the flash layout for boot flow with TF-A.

Changed definition	Max size	NOR/QSPI/NAND	SD card
bl2.pbl RCW+PBI+BL2	1MB	0x00000000	0x00008
FIP image (fip.bin) BL31+BL32(optee.bin)+BL33(U-Boot/UEFI) +headers for secure boot	4MB	0x00100000	0x00800
Boot firmware environment	1MB	0x00500000	0x02800
Secure boot headers	3MB	0x00600000	0x03000

Figure 6. Flash layout for boot flow with TF-A

NOTE

For details about memory layout of various firmware stored in NOR/NAND/QSPI flash device or SD card on all QorIQ Reference Design Boards, see LSDK memory layout and Userland.

5.2.2 Changes in U-Boot

- In the TF-A boot flow, DDR initialization is not required in U-Boot. DDR initialization is a part of TF-A.

  DDR init code can be added to `<atf_dir>/plat/nxp/soc-<soc-name>/<soc-name>ardb/ddr_init.c`

  For example, for LX2160ARDB, the DDR init code can be added to `<atf_dir>/plat/nxp/soc-lx2160/lx2160ardb/ddr_init.c`

  The DDR drivers for various controllers can be found at `<atf_dir>/plat/nxp/drivers/ddr`
- Any changes in the interconnect initialization can be added to the `soc.c` file at `<atf_dir>/plat/nxp/soc-<soc-name>/`
- A single defconfig is created for all the boot sources, `<platform>_tfa_defconfig`. For example, for LX2160ARDB, defconfig needs to be used is `lx2160ardb_tfa_defconfig`
- The TF-A defconfig is created with following considerations:
  - PPA support is disabled
  - Environment support is enabled for all the boot sources, such as FlexSPI, SD boot
- Other changes:
  - Boot command changes done to support Flexbuild Linux autoboot. This is similar to changes required for Flexbuild support. Following variables are defined:
    - XSPI_NOR_BOOTCOMMAND
    - SD_BOOTCOMMAND
  - MC init command changes done to provide the MC init command as per boot source:
    - XSPI_MC_INIT_CMD
    - SD_MC_INIT_CMD

5.2.3 Changes in DDR initialization

DDR initialization has been moved to TF-A from U-Boot for below platforms:

SoC	DDR Init	
	TF-A boot flow	PPA boot flow
LS1012A	Boot ROM -> BL2 **(DDR Init)** -> BL31 ->U-boot/UEFI -> Linux	Boot ROM -> U-Boot/UEFI **(DDR init)** -> PPA > U-Boot/UEFI -> Linux
LS1043A		
LS1046A		
LS1088A		
LS2088A		
LX2160A		NA

Each platform needs to define a function `_init_ddr` which is in a board specific file, for instance `plat/nxp/soc-ls1043/ls1043ardb/ddr_init.c`.

The `_init_ddr` function calls `dram_init` which calls the NXP DDR drivers initialization routine.

The NXP DDR driver supports the following board level applications for DDR:

- **DIMM**: Driver reads SPD for DDR configuration the timing parameters
- **Mock DIMM**: Hardcoded timing in place of reading SPD
- **Discrete DDR**: Driver requires a static DDR configuration to be added

DIMM support

When a board design uses DIMM modules for its dynamic memory, the below function and macros, `_init_ddr` needs to be defined in the board specific files. The parameters which define the number of controllers and number of DIMM per controller, and address are placed here. This information is passed to NXP DDR driver to be used to read the attached SPD and configures the DDR controller.

This function can also be used to apply DDR errata which needs to be applied post DDR configuration.

For example, in the platform specific directory `/packages/firmware/atf/plat/nxp/soc-ls1088/ls1088ardb/`

File: `platform_def.h`

```
#define NXP_DDRCLK_FREQ         100000000

#define NUM_OF_DDRC          2
#define DDRC_NUM_DIMM           2
```

File: `ddr_init.c`

```
long long _init_ddr(void)
{
        struct ddr_info info;
        struct sysinfo sys;
        long long dram_size;

        zeromem(&sys, sizeof(sys));
        get_clocks(&sys);
        debug("platform clock %lu\n", sys.freq_platform);
        debug("DDR PLL1 %lu\n", sys.freq_ddr_pll0);
        debug("DDR PLL2 %lu\n", sys.freq_ddr_pll1);

        zeromem(&info, sizeof(struct ddr_info));
        info.num_ctlrs = NUM_OF_DDRC;        <= Specifies number of DDR
controllers
        info.dimm_on_ctlr = DDRC_NUM_DIMM;   <= Specifies number of
DIMM
        info.clk = get_ddr_freq(&sys, 0);
        info.ddr[0] = (void *)NXP_DDR_ADDR;  <= Specifies the address of DDR
controller

        dram_size = dram_init(&info);

        if (dram_size < 0)
                ERROR("DDR init failed\n");

        erratum_a008850_post();

        return dram_size;
}
```

Mock DIMM support

When a board design uses fixed or discrete DDR, hardcoded or static timings can be used for configuring the DDR timing parameters, a flag named `CONFIG_DDR_NODIMM` needs to be defined in `platform_def.h` file to enable it. The below function (`ddr_get_ddr_params`) will also need to be defined in board specific file. This function uses the structure `dimm_params` which is populated with specific DDR timings.

For example, in the file `platform_def.h`

```
#define NXP_DDRCLK_FREQ         100000000

#define NUM_OF_DDRC             2
#define DDRC_NUM_DIMM           2
#define CONFIG_DDR_NODIMM
```

In the file: `ddr_init.c`

```
struct dimm_params ddr_raw_timing = {
        .n_ranks = 2,
        .rank_density = 4294967296u,
        .capacity = 8589934592u,
        .primary_sdram_width = 64,
        .ec_sdram_width = 8,
        .device_width = 8,
        .die_density = 0x4,
        .rdimm = 0,
        .mirrored_dimm = 1,
        .n_row_addr = 15,
        .n_col_addr = 10,
        .bank_addr_bits = 0,
        .bank_group_bits = 2,
        .edc_config = 2,
        .burst_lengths_bitmask = 0x0c,
        .tckmin_x_ps = 750,
        .tckmax_ps = 1600,
        .caslat_x = 0x00FFFC00,
        .taa_ps = 13750,
        .trcd_ps = 13750,
        .trp_ps = 13750,
        .tras_ps = 32000,
        .trc_ps = 457500,
        .twr_ps = 15000,
        .trfc1_ps = 260000,
        .trfc2_ps = 160000,
        .trfc4_ps = 110000,
        .tfaw_ps = 21000,
        .trrds_ps = 3000,
        .trrdl_ps = 4900,
        .tccdl_ps = 5000,
        .refresh_rate_ps = 7800000,
};

int ddr_get_ddr_params(struct dimm_params *pdimm,
                               struct ddr_conf *conf)
{
        static const char dimm_model[] = "Fixed DDR on board";

        conf->dimm_in_use[0] = 1;       /* Modify accordingly */
        memcpy(pdimm, &ddr_raw_timing, sizeof(struct dimm_params));
        memcpy(pdimm->mpart, dimm_model, sizeof(dimm_model) - 1);
```

```
        /* valid DIMM mask, change accordingly, together with dimm_on_ctlr. */
        return 0x5;
```

Discrete DDR support

When a board design uses fixed or discrete DDR, a flag named `CONFIG_STATIC_DDR` needs to be defined in `platform_def.h` file to enable discrete DDR timings. The below function (`board_static_ddr`) will also need to be defined in a board specific file. This function uses the structure `ddr_cfg_regs` which is populated with specific DDR register configurations.

For Example, the static_1600 structure shown below is used for 1600MT/s.

In the file: `platform_def.h`

```
#define NXP_DDRCLK_FREQ         100000000

#define NUM_OF_DDRC             2
#define DDRC_NUM_DIMM           2
#define CONFIG_STATIC_DDR
```

In the file: `ddr_init.c`

```
#ifdef CONFIG_STATIC_DDR
const struct ddr_cfg_regs static_1600 = {
        .cs[0].config = 0x80040322,
        .cs[0].bnds = 0x7F,
        .sdram_cfg[0] = 0xC50C0000,
        .sdram_cfg[1] = 0x401100,
        .timing_cfg[0] = 0x91550018,
        .timing_cfg[1] = 0xBBB48C42,
        .timing_cfg[2] = 0x48C111,
        .timing_cfg[3] = 0x10C1000,
        .timing_cfg[4] = 0x2,
        .timing_cfg[5] = 0x3401400,
        .timing_cfg[7] = 0x13300000,
        .timing_cfg[8] = 0x2115600,
        .sdram_mode[0] = 0x3010210,
        .sdram_mode[9] = 0x4000000,
        .sdram_mode[8] = 0x500,
        .sdram_mode[2] = 0x10210,
        .sdram_mode[10] = 0x400,
        .sdram_mode[11] = 0x4000000,
        .sdram_mode[4] = 0x10210,
        .sdram_mode[12] = 0x400,
       .sdram_mode[13] = 0x4000000,
        .sdram_mode[6] = 0x10210,
        .sdram_mode[14] = 0x400,
        .sdram_mode[15] = 0x4000000,
        .interval = 0x18600618,
        .zq_cntl = 0x8A090705,
        .clk_cntl = 0x3000000,
        .cdr[0] = 0x80040000,
        .cdr[1] = 0xA181,
        .wrlvl_cntl[0] = 0x8675F607,
        .wrlvl_cntl[1] = 0x7090807,
        .wrlvl_cntl[2] = 0x7070707,
        .debug[28] = 0x00700046,
};

long long board_static_ddr(struct ddr_info *priv)
{
```

```
        memcpy(&priv->ddr_reg, &static_1600, sizeof(static_1600));    <= used 1600 MT/s settings

        return 0x80000000;        <= hardcoded DDR size  2GB
}
```

For LX platforms additional information is required, this is used by the PHY driver to identify DDR parameters.

In the file: `ddr_init.c`

```
const struct dimm_params static_dimm = {
        .rdimm = 0,                     <= selects RDIMM or
not RDIMM
        .primary_sdram_width = 64,      <= selects data bus width
        .ec_sdram_width = 8,            <= selects number of DQ bits in ECC byte
        .n_ranks = 2,                   <= selects number of ranks
        .device_width = 8,              <= selects DQ number in DRAM
        .mirrored_dimm = 1,             <= select if C/A mirroring, all UDIMM with
                                           two ranks are mirrored
};
```

Ones these parameters are correct, rebuild the atf components and the changes will be available in the `bl2.pbl` files which combine the board's RCW/PBL and the bl2 binary.

5.2.4 Deploying TF-A binaries

To migrate to the TF-A boot flow from the old boot flow (with PPA), you need to compile the TF-A binaries, `bl2_<boot_mode>.pbl` and `fip.bin`, and flash these binaries on the specific boot medium on the board.

The following table lists the new flash images in the boot flow with TF-A.

TF-A binary name	Components
`bl2_<boot_mode>.pbl`	BL2 binary: `<platform>` initialization binary
	RCW binary for <boot_mode>
`fip.bin`	BL31: Secure runtime firmware
	BL32: Trusted OS, for example, OP-TEE (optional)
	BL33: U-Boot/UEFI image

NOTE

- **<**`platform`**> =** `ls1012ardb | ls1012afrdm | ls1012afrwy | ls1043ardb | ls1046ardb | ls1088ardb | ls2088ardb | lx2160ardb`
- **<**`boot_mode`**> =** `nor, nand, sd, emmc, qspi, flexspi_nor`

Table 22. Supported boot modes for each platform

Platforms	Boot modes					
	SD	QSPI	NOR	NAND	eMMC	Flexspi-NOR
LS1012ARDB		Yes				
FRDM-LS1012A		Yes				

Table continues on the next page...

Table 22. Supported boot modes for each platform (continued)

FRWY-LS1012A		Yes				
FRWY-LS1012A (512MB)		Yes				
LS1043ARDB	Yes		Yes	Yes		
LS1046ARDB	Yes	Yes			Yes	
LS1088ARDB	Yes	Yes				
LS2088ARDB		Yes	Yes			
LX2160ARDB	Yes				Yes	Yes

Follow these steps to compile and deploy TF-A binaries (`bl2_<boot_mode>.pbl` and `fip.bin`) on the required boot mode.

1. Compile PBL binary from RCW source file
2. Compile U-Boot binary
3. [Optional] Compile OP-TEE binary
4. Compile TF-A binaries (`bl2_<boot_mode>.pbl` and `fip.bin`)
5. Program TF-A binaries on specific boot mode

5.2.4.1 How to compile PBL binary from RCW source file

You need to compile the `rcw_<boot_mode>.bin` binary to build the `bl2_<boot_mode>.pbl` binary.

Clone the `rcw` repository and compile the PBL binary.

1. $ `git clone https://source.codeaurora.org/external/qoriq/qoriq-components/rcw`
2. $ `cd rcw`
3. $ `git checkout -b <new branch name> <LSDK tag>`. For example, $ `git checkout -b LSDK-19.03 LSDK-19.03`
4. $ `cd <platform>`
5. If required, make changes to the rcw files.
6. $ `make`

This procedure builds the compiled PBL binary for all the boot modes, available for the selected platform.

For example: The compiled PBL binary for QSPI NOR flash on LS1088ARDB-PB, `rcw_1600_qspi.bin`, is available at `rcw/ls1088ardb/FCQQQQQQQQ_PPP_H_0x1d_0x0d/`.

To build the `bl2_<boot_mode>.pbl` binary, see How to compile BL2 binary

NOTE

See the `rcw/<platform>/README` file for an explanation of the naming convention for the directories that contain the RCW source and binary files.

5.2.4.2 How to compile U-Boot binary

You need to compile the `u-boot.bin` binary to build the `fip.bin` binary.

Clone the `u-boot` repository and compile the U-Boot binary for TF-A.

1. `$ git clone https://source.codeaurora.org/external/qoriq/qoriq-components/u-boot.git`

2. `$ cd u-boot`
3. `$ git checkout -b <new branch name> LSDK-<LSDK version>`. For example, `$ git checkout -b LSDK-20.04 LSDK-20.04`
4. `$ export ARCH=arm64`
5. `$ export CROSS_COMPILE=aarch64-linux-gnu-`
6. `$ make distclean`
7. `$ make <platform>_tfa_defconfig`

   NOTE

   A single defconfig is created for all the boot sources, `<platform>_tfa_defconfig`. For example, for LS1088ARDB, defconfig needs to be used is `ls1088ardb_tfa_defconfig`.

8. `$ make`

   NOTE

   If the make command shows the error "`*** Your GCC is older than 6.0 and is not supported`", ensure that you are using Ubuntu 18.04 64-bit version for building LSDK 20.04 U-Boot binary.

The compiled U-Boot image, `u-boot.bin`, is available at `u-boot/`.

5.2.4.3 [Optional] How to compile OP-TEE binary

You need to compile the `tee.bin` binary to build `fip.bin` with OP-TEE. However, OP-TEE is optional, you can skip the procedure to compile OP-TEE if you want to build the FIP binary without OP-TEE.

Clone the `optee_os` repository and build the OP-TEE binary.

1. `$ git clone https://source.codeaurora.org/external/qoriq/qoriq-components/optee_os`
2. `$ cd optee_os`
3. `$ git checkout -b <new branch name> LSDK-<LSDK version>`. For example, `$ git checkout -b LSDK-20.04 LSDK-20.04`
4. `$ export ARCH=arm`
5. `$ export CROSS_COMPILE64=aarch64-linux-gnu-`
6. `$ make CFG_ARM64_core=y PLATFORM=ls-<platform>`. For example, `$ make CFG_ARM64_core=y PLATFORM=ls-ls1088ardb`
7. `$ aarch64-linux-gnu-objcopy -v -O binary out/arm-plat-ls/core/tee.elf out/arm-plat-ls/core/tee.bin`

The compiled OP-TEE image, `tee.bin`, is available at `optee_os/out/arm-plat-ls/core/`.

5.2.4.4 How to compile TF-A binaries

Clone the `atf` repository and compile the TF-A binaries, `bl2_<boot_mode>.pbl` and `fip.bin`.

1. `$ git clone https://source.codeaurora.org/external/qoriq/qoriq-components/atf`
2. `$ cd atf`
3. `$ git checkout -b <new branch name> LSDK-<LSDK version>`. For example, `$ git checkout -b LSDK-20.04 LSDK-20.04`
4. `$ export ARCH=arm64`
5. `$ export CROSS_COMPILE=aarch64-linux-gnu-`

Follow the steps mentioned in How to compile BL2 binary (`bl2_<boot_mode>.pbl`) and How to compile FIP binary (`fip.bin`) to compile both TF-A binaries.

5.2.4.4.1 How to compile BL2 binary

To build BL2 binary with OPTEE, run this command:

```
$ make PLAT=<platform> bl2 SPD=opteed BOOT_MODE=<boot_mode> BL32=<optee_binary> pbl
RCW=<path_to_rcw_binary>/<rcw_binary_for_specific_boot_mode>
```

The compiled BL2 binaries, `bl2.bin` and `bl2_<boot_mode>.pbl` are available at `atf/build/<platform>/release/`. For any update in the BL2 source code or RCW binary, the `bl2_<boot_mode>.pbl` binary needs to be recompiled.

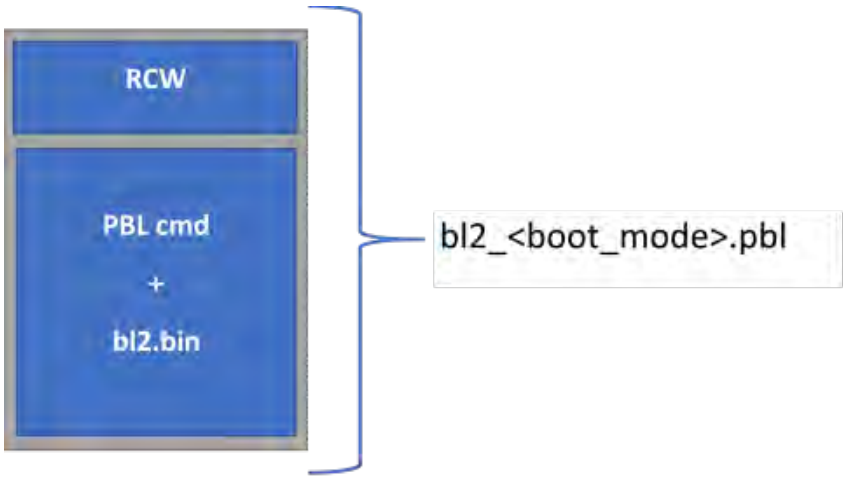

Figure 7. bl2.pbl

NOTE

To compile the BL2 binary without OPTEE:

```
make PLAT=<platform> bl2 BOOT_MODE=<boot_mode> pbl
RCW=<path_to_rcw_binary>/<rcw_binary_for_specific_boot_mode>
```

5.2.4.4.2 How to compile FIP binary

To build FIP binary with OPTEE and without trusted board boot, run this command:

```
$ make PLAT=<platform> fip BL33=<path_to_u-boot_binary>/u-boot.bin SPD=opteed
BL32=<path_to_optee_binary>/tee.bin
```

The compiled BL31 and FIP binaries, `bl31.bin`, `fip.bin`, are available at `atf/build/<platform>/release/`. For any update in the BL31, BL32, or BL33 binaries, the `fip.bin` binary needs to be recompiled.

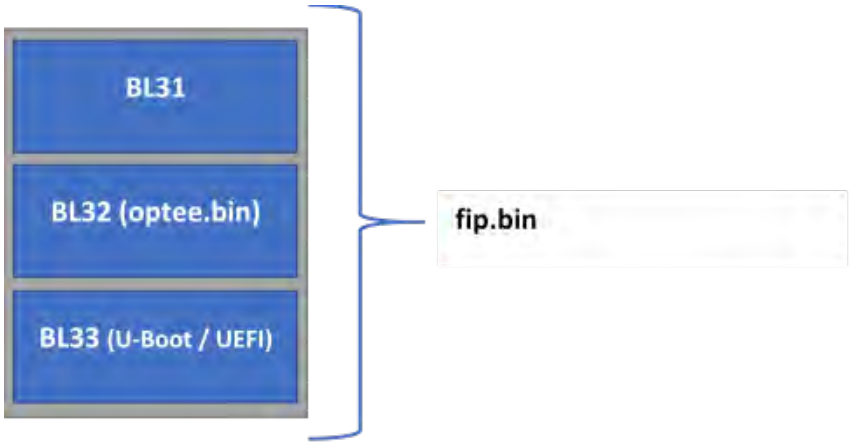

Figure 8. fip.bin

NOTE

To compile the FIP binary without OPTEE and without trusted board boot:

```
make PLAT=<platform> fip BL33=<path_to_u-boot_binary>/u-boot.bin
```

NOTE

To compile the FIP binary with trusted board boot, refer the read me at `<tfa_repo>/plat/nxp/README.TRUSTED_BOOT`.

5.2.4.5 How to program TF-A binaries on specific boot mode

- **QSPI NOR Flash**
  1. Boot from QSPI NOR flash0
  2. Program QSPI NOR flash1: => `sf probe 0:1`
  3. Flash bl2_qspi.pbl:

     ```
     => tftp 0xa0000000 bl2_qspi.pbl
     => sf erase 0x0 +$filesize && sf write 0xa0000000 0x0 $filesize
     ```

  4. Flash fip.bin:

     ```
     => tftp 0xa0000000 fip.bin
     => sf erase 0x100000 +$filesize && sf write 0xa0000000 0x100000 $filesize
     ```

  5. Boot from QSPI NOR flash1. The board will boot with TF-A
- **SD Card**
  1. Boot from QSPI NOR flash0.
  2. Flash bl2_sd.pbl on SD card:

     ```
     => tftp 82000000 bl2_sd.pbl
     => mmc write 82000000 8 <blk_cnt>
     ```

Here, blk_cnt refers to number of blocks in SD card that need to be written as per the file size. For example, when you load bl2_sd.pbl from the TFTP server, if the bytes transferred is 82809 (14379 hex), then blk_cnt is calculated as 82809/512 = 161 (A1 hex). For this example, mmc write command will be: `=> mmc write 82000000 8 A1`.

3. Flash fip.bin on SD card:

```
=> tftp 82000000 fip.bin
=> mmc write 82000000 800 <blk_cnt>
```

Here, blk_cnt refers to number of blocks in SD card that need to be written as per the file size. For example, when you load fip.bin from the TFTP server, if the bytes transferred is 1077157 (106fa5 hex) , then blk_cnt is calculated as1077157/512 = 2103 (837 hex) . For this example, mmc write command will be: `=> mmc write 82000000 800 837`.

4. Boot from SD card. The board will boot with TF-A

- **NOR Flash**
  1. Boot from default bank.
  2. Flash bl2_nor.pbl on alternate bank:

```
=> tftp 82000000 $path/bl2_nor.pbl;
=> pro off all;erase 64000000 +$filesize;cp.b 82000000 64000000 $filesize
```

  3. Flash fip.bin on alternate bank:

```
=> tftp 82000000 $path/fip.bin;
=> pro off all;erase 64100000 +$filesize;cp.b 82000000 64100000 $filesize
```

  4. Boot the board from alternate bank. The board will boot with TF-A.

- **NAND Flash**
  1. Flash bl2_nand.pbl:

```
=> tftp 82000000 $path/bl2_nand.pbl
=> nand erase 0x0 $filesize;nand write 0x82000000 0x0 $filesize;
```

  2. Flash fip.bin:

```
=> tftp 82000000  $path/fip.bin
=> nand erase 0x100000 $filesize;nand write 0x82000000 0x100000 $filesize;
```

  3. Then boot from NAND flash. The board will boot with TF-A.

NOTE

For details about the boot modes supported by a hardware board and booting commands, see the LSDK Quick Start.

5.2.4.6 How to compile DDR FIP image (only required for LX2160A)

A pre-built FIP image is already provided in the release. To regenerate the DDR fip image for LX2160, perform the following steps:

1. $ `cd atf/tools/fiptool`
2. $ Download DDR PHY binaries: `git clone https://github.com/NXP/ddr-phy-binary.git`
3. $ `make`
4. $ `./fiptool create --ddr-immem-udimm-1d ddr-phy-binary/lx2160a/ddr4_pmu_train_imem.bin --ddr-immem-udimm-2d ddr-phy-binary/lx2160a/ddr4_2d_pmu_train_imem.bin`

```
--ddr-dmmem-udimm-1d ddr-phy-binary/lx2160a/ddr4_pmu_train_dmem.bin --ddr-dmmem-
udimm-2d ddr-phy-binary/lx2160a/ddr4_2d_pmu_train_dmem.bin --ddr-immem-rdimm-1d
ddr-phy-binary/lx2160a/ddr4_rdimm_pmu_train_imem.bin --ddr-immem-rdimm-2d ddr-phy-
binary/lx2160a/ddr4_rdimm2d_pmu_train_imem.bin --ddr-dmmem-rdimm-1d ddr-phy-binary/
lx2160a/ddr4_rdimm_pmu_train_dmem.bin --ddr-dmmem-rdimm-2d ddr-phy-binary/lx2160a/
ddr4_rdimm2d_pmu_train_dmem.bin fip_ddr_all.bin
```

The DDR fip image, `fip_ddr_all.bin`, is generated at `atf/tools/fiptool`

List of DDR PHY binaries for each option:

- ***--ddr-immem-udimm-1d*** *<ddr4_pmu_train_imem.bin>*
- ***--ddr-immem-udimm-2d*** *<ddr4_2d_pmu_train_imem.bin>*
- ***--ddr-dmmem-udimm-1d*** *<ddr4_pmu_train_dmem.bin>*
- ***--ddr-dmmem-udimm-2d*** *<ddr4_2d_pmu_train_dmem.bin>*
- ***--ddr-immem-rdimm-1d*** *<ddr4_rdimm_pmu_train_imem.bin>*
- ***--ddr-immem-rdimm-2d*** *<ddr4_rdimm2d_pmu_train_imem.bin>*
- ***--ddr-dmmem-rdimm-1d*** *<ddr4_rdimm_pmu_train_dmem.bin>*
- ***--ddr-dmmem-rdimm-2d*** *<ddr4_rdimm2d_pmu_train_dmem.bin>*

5.3 U-Boot

5.3.1 LSDK U-Boot uses distro boot feature

As in previous versions of the NXP SDK, the U-Boot variable `bootcmd` contains commands that represent the default boot process. LSDK is different in that it uses a standard U-Boot feature called `distro boot` to make automatic booting more flexible. In distro boot, `bootcmd` runs additional commands in the variable `distro_bootcmd`. These commands are the heart of the distro boot process.

Distro boot sequential examines partitions on mass storage devices looking for a script file. When U-Boot finds one, it loads and executes it to initiate the boot process.

The mass storage devices to be searched are defined in the U-Boot environment variable `boot_targets`. Set it to control which mass storage devices are searched and the order in which they are searched. For example,

```
=> printenv boot_targets
boot_targets=usb0 mmc0 scsi0 dhcp
```

The command above shows the search order USB device 0, MMC (or SD) device 0, SCSI (SATA) device 0, followed by DHCP.

The process of searching involves a number of U-Boot variables. It ends with the variables shown below in an example from an LS2088ARDB.

```
=> printenv scan_dev_for_scripts
scan_dev_for_scripts=for script in ${boot_scripts}; do if test -e ${devtype} ${devnum}:$
{distro_bootpart} ${prefix}${script}; then echo Found U-Boot script ${prefix}${script};
run boot_a_script; echo SCRIPT FAILED: continuing...; fi; done => printenv boot_scripts
boot_scripts=ls2088ardb_boot.scr => printenv boot_a_script boot_a_script=load ${devtype} $
{devnum}:${distro_bootpart} ${scriptaddr} ${prefix}${script}; env exists secureboot && load $
{devtype} ${devnum}:${distro_bootpart} ${scripthdraddr} ${prefix}${boot_script_hdr} && esbc_validate
${scripthdraddr};source ${scriptaddr}
```

The process searches for a script named by the variable `boot_scripts`. In this example, the search is for a script named `ls2088ardb_boot.scr`. When this script is located, it is loaded into RAM using the `load` command and run using the `source` command. This causes Linux to boot.

LSDK puts boot scripts into a file system on the second partition of a mass storage device. U-Boot can display files in a file system. Continuing the example, the following U-Boot commands list the files in the second partition of USB device 0 (do a `usb start` first):

```
=> ls usb 0:2
          174096 config-4.19.68-00020-g5256accac243
         1030533 firmware_ls1012afrwy_uboot_qspiboot.img
        45346968 firmware_ls1012ardb_uboot_qspiboot.img
        45346968 firmware_ls1028ardb_uboot_xspiboot.img
        45346968 firmware_ls1043ardb_uboot_norboot.img
        45346968 firmware_ls1046afrwy_uboot_qspiboot.img
        45346968 firmware_ls1046ardb_uboot_qspiboot.img
        45346968 firmware_ls1088ardb_pb_uboot_qspiboot.img
        45346968 firmware_ls2088ardb_uboot_norboot.img
        45346968 firmware_ls2088ardb_uboot_qspiboot.img
        45346968 firmware_lx2160ardb_uboot_xspiboot.img
<DIR>       4096 flash_images
           20846 flash_images.scr
           14243 fsl-ls1012a-2g5rdb.dtb
           15257 fsl-ls1012a-frdm.dtb
           15267 fsl-ls1012a-frwy.dtb
           15923 fsl-ls1012a-qds.dtb
           14290 fsl-ls1012a-rdb.dtb
           20767 fsl-ls1028a-qds.dtb
           19986 fsl-ls1028a-rdb-dpdk.dtb
           20121 fsl-ls1028a-rdb.dtb
           32939 fsl-ls1043a-qds.dtb
           34451 fsl-ls1043a-qds-sdk.dtb
           30627 fsl-ls1043a-rdb.dtb
           40956 fsl-ls1043a-rdb-sdk.dtb
           33614 fsl-ls1043a-rdb-usdpaa.dtb
           29843 fsl-ls1046a-frwy.dtb
           31519 fsl-ls1046a-frwy-sdk.dtb
           32754 fsl-ls1046a-frwy-usdpaa.dtb
           32709 fsl-ls1046a-qds.dtb
           34269 fsl-ls1046a-qds-sdk.dtb
           29945 fsl-ls1046a-rdb.dtb
           40270 fsl-ls1046a-rdb-sdk.dtb
           32956 fsl-ls1046a-rdb-usdpaa.dtb
           18608 fsl-ls1088a-qds.dtb
           19175 fsl-ls1088a-rdb.dtb
           23524 fsl-ls2080a-qds.dtb
           23082 fsl-ls2080a-rdb.dtb
           21961 fsl-ls2081a-rdb.dtb
           23428 fsl-ls2088a-qds.dtb
           29733 fsl-ls2088a-rdb.dtb
           27720 fsl-lx2160a-qds.dtb
           32280 fsl-lx2160a-rdb.dtb
<DIR>       4096 grub
            2176 hdr_ls1012afrwy_bs.out
            2176 hdr_ls1012ardb_bs.out
            2176 hdr_ls1028ardb_bs.out
            2176 hdr_ls1043ardb_bs.out
            2176 hdr_ls1046afrwy_bs.out
            2176 hdr_ls1046ardb_bs.out
            2176 hdr_ls1088ardb_bs.out
            2176 hdr_ls2088ardb_bs.out
            2176 hdr_lx2160ardb_bs.out
        24852992 Image
        10814630 Image.gz
             964 ls1012afrwy_boot.scr
```

```
             962 ls1012ardb_boot.scr
            1038 ls1028ardb_boot.scr
             965 ls1043ardb_boot.scr
             968 ls1046afrwy_boot.scr
             965 ls1046ardb_boot.scr
             961 ls1088ardb_boot.scr
             961 ls2088ardb_boot.scr
        28569752 lsdk_linux_arm64_LS_tiny.itb
             980 lx2160ardb_boot.scr
        17462941 rootfs_yocto_arm64_tiny.cpio.gz
<DIR>       4096 secboot_hdrs
             992 srk_hash.txt
        10814630 vmlinuz-4.19.68-00020-g5256accac243
```

It shows that this USB drive contains scripts (and necessary images) to boot any of the boards LS1043ARDB, LS1046ARDB, LS1088ARDB, and LS2088ARDB. For example, the LS2088ARDB boot script is `ls2088ardb_boot.scr`. The script files are binary. But one can boot Linux and look at them. LSDK mounts the boot partition containing the scripts at mount point `/boot`.

```
root@localhost:~# ls /boot
Image                                   firmware_ls2088ardb_uboot_norboot.img   fsl-
ls1028a-qds.dtb          fsl-ls1046a-frwy.dtb        fsl-ls2081a-rdb.dtb
hdr_ls1046afrwy_bs.out  ls1046afrwy_boot.scr
Image.gz                                firmware_ls2088ardb_uboot_qspiboot.img  fsl-
ls1028a-rdb-dpdk.dtb     fsl-ls1046a-qds-sdk.dtb     fsl-ls2088a-qds.dtb
hdr_ls1046ardb_bs.out   ls1046ardb_boot.scr
config-4.19.68-00020-g5256accac243      firmware_lx2160ardb_uboot_xspiboot.img  fsl-
ls1028a-rdb.dtb          fsl-ls1046a-qds.dtb         fsl-ls2088a-rdb.dtb
hdr_ls1088ardb_bs.out   ls1088ardb_boot.scr
firmware_ls1012afrwy_uboot_qspiboot.img    flash_images                            fsl-
ls1043a-qds-sdk.dtb      fsl-ls1046a-rdb-sdk.dtb     fsl-lx2160a-qds.dtb
hdr_ls2088ardb_bs.out   ls2088ardb_boot.scr
firmware_ls1012ardb_uboot_qspiboot.img     flash_images.scr                        fsl-
ls1043a-qds.dtb          fsl-ls1046a-rdb-usdpaa.dtb  fsl-lx2160a-rdb.dtb
hdr_lx2160ardb_bs.out   lsdk_linux_arm64_LS_tiny.itb
firmware_ls1028ardb_uboot_xspiboot.img     fsl-ls1012a-2g5rdb.dtb                  fsl-
ls1043a-rdb-sdk.dtb      fsl-ls1046a-rdb.dtb         grub
lost+found              lx2160ardb_boot.scr
firmware_ls1043ardb_uboot_norboot.img      fsl-ls1012a-frdm.dtb                    fsl-
ls1043a-rdb-usdpaa.dtb   fsl-ls1088a-qds.dtb         hdr_ls1012afrwy_bs.out
ls1012afrwy_boot.scr    rootfs_yocto_arm64_tiny.cpio.gz
firmware_ls1046afrwy_uboot_qspiboot.img    fsl-ls1012a-frwy.dtb                    fsl-
ls1043a-rdb.dtb          fsl-ls1088a-rdb.dtb         hdr_ls1012ardb_bs.out
ls1012ardb_boot.scr     secboot_hdrs
firmware_ls1046ardb_uboot_qspiboot.img     fsl-ls1012a-qds.dtb                     fsl-ls1046a-frwy-
sdk.dtb     fsl-ls2080a-qds.dtb         hdr_ls1028ardb_bs.out   ls1028ardb_boot.scr     srk_hash.txt
firmware_ls1088ardb_pb_uboot_qspiboot.img  fsl-ls1012a-rdb.dtb                     fsl-
ls1046a-frwy-usdpaa.dtb  fsl-ls2080a-rdb.dtb         hdr_ls1043ardb_bs.out
ls1043ardb_boot.scr     vmlinuz-4.19.68-00020-g5256accac243
```

The boot scripts are sophisticated due to secure boot. Ignore secure boot, and the key steps in a boot script are:

```
part uuid $devtype $devnum:3 partuuid3
setenv bootargs console=ttyS1,115200 earlycon=uart8250,mmio,0x21c0600 root=PARTUUID=$partuuid3 rw
rootwait $othbootargs default_hugepagesz=2m hugepagesz=2m hugepages=256 load $devtype $devnum:2
$kernel_addr_r /Image; load $devtype $devnum:2 $fdt_addr_r /fsl-ls2088a-rdb.dtb; booti $kernel_addr_r
- $fdt_addr_r
```

The distro boot search process sets the variables `devtype` and `devnum`. In this example, they would be "`usb`" and "`0`".

The U-Boot `part` command sets variable `partuuid3` to the partition universal unique identifier of partition 3 of USB device 0. This value is used in `bootargs` to identify the root partition to the Linux kernel. This method is better than using a device name (like `/dev/sda3`) because it is not dependent on probe order.

The next steps are to load the kernel image (`vmlinuz`) and device tree (`fsl-ls2088a-rdb.dtb`) into RAM and then boot Linux using `booti`.

In summary (and ignoring secure boot), the distro boot processes searches for a partition with a file system containing a boot script. It loads and runs the boot script. The boot script does the five steps above to boot Linux.

To boot your own kernel, replace the kernel and device tree images in `/boot` and reboot your system. But also install any needed kernel modules first.

There are two types of userland in LSDK: 1) Large standard distro (LSDK rootfs) deployed on external SD/USB/SATA media storage. 2) Prebuilt tiny ramdisk rootfs(currently non-customizable) deployed in flash media onboard for arm32/arm64 target.

If U-Boot is used as boot loader, after LSDK is installed by flex-installer and reboots the target board, U-Boot will first automatically search for boot script `<platform>_boot.scr` from SD/eMMC/USB/SATA storage media, if a valid `<platform>_boot.scr` is found, U-Boot will boot the external distro (Ubuntu as default) deployed on SD/USB/SATA media storage, otherwise U-Boot will fall back to boot the tiny distro deployed on flash media onboard.

In case of booting LSDK tiny rootfs from flash media:

The default U-Boot environment `bootargs` is used and user can directly modify bootargs for custom kernel ondemand.

In case of booting LSDK distro from external SD/USB/SATA storage disk:

The default U-Boot environment '`bootargs`' is NOT used by external distro, `bootargs` is preset in `<platform>_boot.scr`, users can indirectly modify othbootargs ondemand, for example, `setenv othbootargs fsl_fm_max_frm=9600` in U-Boot prompt.

5.3.2 LSDK U-Boot flash image feature

In case user needs to flash different image (e.g. atf bl2, atf bl3 fip, dtb, kernel, etc) to current or other bank to evaluate certain feature on Layerscape board, for example, to evaluate TDM feature with the non-default rcw_1600_qetdm.bin on LS1043ARDB:

```
1. change default rcw_1600.bin to rcw_1600_qetdm.bin for rcw_nor variable in configs/board/ls1043ardb/
manifest in Flexbuild.
2. clean the obsolete atf images
   $ rm -rf build/firmware/atf/ls1043ardb
3. re-generate ATF image with new RCW specified by step 1
   $ flex-builder -c atf -m ls1043ardb -b nor
4. copy the new BL2 image build/firmware/atf/ls1043ardb/bl2_nor.pbl to flash_images/ls1043ardb
directory of bootpartition on SD card
5. run the following commands in uboot prompt on ls1043ardb
   => setenv board ls1043ardb
   => setenv bd_type mmc
   => setenv bd_part 0:2
   => setenv bank other
   => ls $bd_type $bd_part flash_images/ls1043ardb
   # to update RCW in BL2
   => setenv img bl2
   => setenv bl2_img flash_images/ls1043ardb/bl2_nor.pbl
   => load $bd_type $bd_part $load_addr flash_images.scr
   => source $load_addr

   # similarly, to update dtb
   => setenv img dtb
   => setenv dtb_img fsl-ls1043a-rdb-usdpaa.dtb
   => source $load_addr
```

- To flash all images to current or other bank, set environment variable img to all by executing commands 'setenv img all' and 'source $load_addr'.

- To flash single image, set environment variable img to one of following: bl2, fip, mcfw, mcdpc, mcdpl, fman, qe, pfe, phy, dtb or kernel
- If needed, you can override the default setting of variable bd_part, flash_type, bl2_img, fip_img, dtb_img, kernel_itb, qe_img, fman_img, phy_img, mcfw_img, mcdpl_img, mcdpc_img before running 'source $load_addr'.

5.4 UEFI

Release description

This section provides information about the LSDK UEFI release on QorIQ LS boards. The following features are supported in this release:

- DUART
- I2C
- DSPI
- SATA
- SD, FAT32 filesystem
- GPIO Support
- RTC, Watchdog
- TF-A Integration
- PCIe – e1000 NIC card support
- DPAA 1.x support - XFI, RGMII, and SGMI
- DPAA2.x support - XFI
- SMP Linux boot via EFI_STUB on SD card
- PXE boot via PCIe and DPAA interfaces
- Ubuntu Distro boot support
- KASLR Support in UEFI
- QSPI boot
- USB 3.0
- Prefetch configuration support
- MC High Mem Support
- RTC Support for LS1043A x2 board

Feature summary

Table 23. Feature summary

Features\Board	LS1043ARDB	LS2088ARDB	LS1046ARDB	LX2160ARDB
UART	Yes	Yes	Yes	Yes
I2C	Yes	Yes	Yes	Yes
DSPI	Yes	Yes	No	No
SATA	N/A	Yes	Yes	Yes

Table continues on the next page...

Table 23. Feature summary (continued)

SD,FAT32 filesystem	Yes	Yes	Yes	Yes
GPIO	Yes	No	Yes	No
IFC-NAND	Yes	Yes	No	N/A
IFC-NoR	Yes	Yes	N/A	N/A
RTC	Yes	Yes	Yes	Yes
Watchdog	Yes	Yes	Yes	Yes
TF-A Integration	Yes	Yes	Yes	Yes
PCIe – e1000 NIC	Yes	Yes	Yes (PCIe Using legacy interrupt)	Yes
DPAA 1.x	Yes	N/A	Yes	N/A
DPAA 2.x	N/A	Yes	N/A	Yes
SMP Linux boot via EFI_STUB on SD card	Yes	Yes	Yes	Yes
PXE boot via PCIe and DPAA interfaces	Yes	Yes	Yes	Yes
Ubuntu Distro boot support	Yes	Yes	Yes	Yes
KASLR Support in UEFI	Yes	Yes	Yes	Yes
QSPI boot	No	No	Yes	Yes (FSPI)
USB 3.0	No	Yes	No	Yes
Prefetch Config support	No	Yes	No	No
MC High Mem Support	N/A	Yes	N/A	Yes
ACPI	No	No	No	No
Silicon Rev	1.0/1.1	1.0	1.0	1.0/2.0

Tool chain

- `gcc-linaro-4.9-2016.02-x86_64_aarch64-linux-gnu-` Used to compile UEFI firmware (can be downloaded from `https://releases.linaro.org/components/toolchain/binaries/4.9-2016.02/aarch64-linux-gnu/gcc-linaro-4.9-2016.02-x86_64_aarch64-linux-gnu.tar.xz`)

Known issues

QUEFI-780: ls1043ardb_uefi reconnect hang

Limitation

Only NOR boot is supported with UEFI. SD boot is not supported with UEFI. SD card as storage device is supported, but the firmware images have to be kept in NOR flash.

On LS1046ARDB, QSPI flash is disabled during device tree fix-up and Linux will not be able to use QSPI flash as UEFI run time services will be using it for variables storage.

On LX2160ARDB, FlexSPI flash is disabled during device tree fix-up and Linux will not be able to use FlexSPI flash as UEFI run time services will be using it for variables storage.

On LX2160A eSDHC1 for SD card, when eSDHC operates at 3.3 V, damage can accumulate in an internal level shifter at a higher than expected rate. The faster the interface runs the more damage accumulates. The recommended hardware workaround is to use an onboard level shifter that is 1.8 V on the SoC side and 3.3 V on the SD card side. For current LX2160ARDB boards without hardware workaround, PCD `PcdSdxcIOReliabilityErratum` could be enabled ensuring 1.8 V IO voltage and disabling eSDHC if no card. This option assumes no hotplug, and UEFI has to make all the way to Linux to use 1.8 V UHS-I speed mode if has card. If user does not want the workaround, user can choose not to select it, running eSDHC in unsafe mode.

5.4.1 Introduction

Purpose

This section describes how to use the accompanying LSDK release on the QorIQ Layerscape platforms and how to boot LSDK distro with UEFI. The section covers UEFI enablement on QorIQ Layerscape platforms and does not describe UEFI specifications in detail.

References

- Unified Extensible Firmware Interface Specification
- QorIQ LS1043A Reference Manual
- QorIQ LS1046A Reference Manual
- QorIQ LS2088A Reference Manual
- QorIQ LX2160A Reference Manual

5.4.2 UEFI overview

UEFI (Unified Extensible Firmware Interface) describes an interface between the operating system (OS) and the platform firmware. The interface consists of data tables that contain platform-related information, plus boot and runtime service calls that are available to the operating system and its loader. Together, these provide a standard, modern environment for booting an operating system and running pre-boot applications.

UEFI implementations are governed by the UEFI specifications, which are designed as a pure interface specification. As such, the specification defines the set of interfaces and structures that platform firmware must implement.

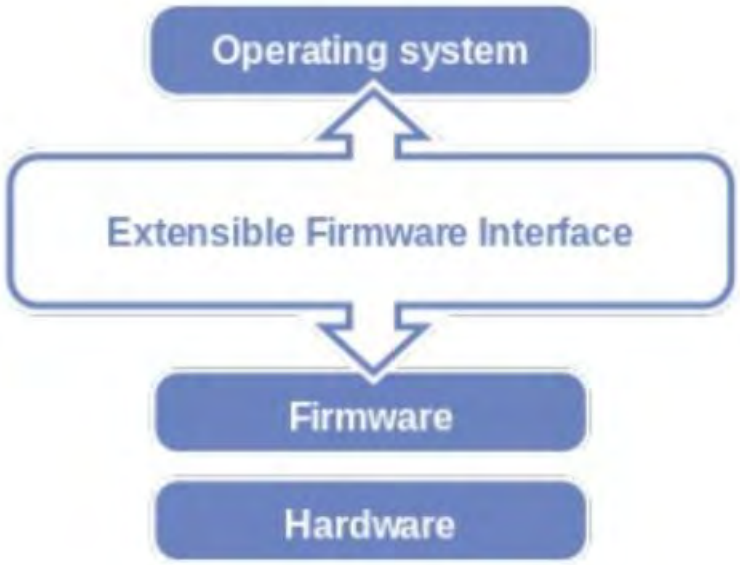

Figure 9. UEFI

For the latest version of UEFI, refer bellow references:

References

- Unified Extensible Firmware Interface Specification
- QorIQ LS1043A Reference Manual
- QorIQ LS1046A Reference Manual
- LS2088A Reference Manual

UEFI Bootflow

The following is the Boot Execution Order on QorIQ LS boards:

- Execution begins in the PBI State Machine when the SoC comes out of reset
- After PBI, execution starts with SP boot core which gives control to GPP Boot core
- GPP boot core gives control to TFA.
- TF-A starts with BL2 image and load BL33 (UEFI image)
- TF-A jumps control to UEFI in EL2 mode.
- UEFI starts with DXE phase followed by BDS phase
- In BDS phase, UEFI loads OS (Linux) or OS loader (such as Grub)
- Linux starts in EL1 mode
- Linux Kernel invokes PSCI (cpu_on) to release secondary core.

Here, the TF-A firmware is the platform and runtime security firmware which allows configuring and enforcing platform specific security policies.

Environment requirements

Hardware requirements

- Host PC: Ubuntu (64-bit variant with at least 2 GB RAM) host is preferred to compile/build the UEFI firmware.
- Board: QorIQ Layerscape, with UART cable.
- SD Card: Preferably from well-known vendors like SanDisk.

Software requirements

- To build the UEFI firmware on the Ubuntu host, install uuid-dev.

```
$ sudo apt-get install uuid-dev
```

- To build the UEFI firmware on the ubuntu Host, Install Linaro GCC-4.9 toolchain on your Host machine using the following commands.

```
$ wget https://releases.linaro.org/components/toolchain/binaries/4.9-2016.02/aarch64-linux-
gnu/gcc-linaro-4.9-2016.02-x86_64_aarch64-linux-gnu.tar.xz
$ tar -xvf gcc-linaro-4.9-2016.02-x86_64_aarch64-linux-gnu.tar.xz
```

  Add path of these toolchains to the PATH environment variable:

```
$ export PATH=/home/user/linaro_4.9_2016/gcc-linaro-4.9-2016.02-x86_64_aarch64-linux-gnu/bin:$PATH
```

- Ensure that Python (2.7 or higher) is installed on the build machine, for successful compilation.

```
 $ python –version
 Python 2.7.12
```

- Ensure DTC compiler version is 1.4.3 or later. Below are the steps to Check and Update DTC tool version

```
$ dtc --version
Version: DTC 1.4.0
$ mkdir ~/dtc
$ cd ~/dtc
$ git clone https://git.kernel.org/pub/scm/utils/dtc/dtc.git
$ cd dtc/
$ git checkout -b v1.4.7 tags/v1.4.7
$ cd ../
$ make -C dtc DESTDIR=$(pwd) install
$ export PATH = $(pwd)/$HOME/bin:$PATH
$ dtc --version
Version: DTC 1.4.7
```

5.4.3 LSDK distro boot with UEFI

Boot up Image Requirements

The following images are required for UEFI boot.

- BL2 and BL33 (UEFI Image)
- FMAN (Frame Manager) Micro Code - Required for DPAA1 (Data Path Acceleration Architecture) interfaces, applicable for LS1043ARDB board.
- Mc Firmware, DPL and DPC binaries for DPAA2 Interfaces, applicable for LS2088ARDB/LX2160ARDB board.
- Phy Firmware (for Cortina Phy), applicable for LS2088ARDB board.

UEFI Boot Order

The UEFI boot manager will try to boot from all entries as they appear in the UEFI boot menu. Boot entries can be divided into the following three categories.

- Boot entries for Block devices
- Boot entries for Network Boot (PXE boot)
- Boot entry for UEFI Shell

For block devices, the UEFI boot manager will look for an EFI application with a predefined name (`BOOT{machine type short name}.EFI`) in `/EFI/BOOT`. If found, the boot manager will automatically run the EFI application. In our case (AArch64 Arm platforms), the application should be named as `BOOTAA64.EFI`.

Linux Boot Storage Media Layout

Table 24. Media Layout

Region 1 (4 KB) MBR/GPT	Region 2 (64 MB) Loaders & FW UEFI TF-A firmware FMan or MC firmware lsdk_linux_arm64_tiny.itb	Region 3 (20 MB) Partition 1 (FAT 16/32) LABEL: EFI BOOTAA64.EFI grub.cfg	Region 4 (1GB) Partition 2 (EXT4) LABEL: boot Kernel DTB lsdk_linux_arm64_tiny.itb distro boot scripts other	Region 5 (left space of disk) Partition 3 (EXT4) LABEL: rootfs Ubuntu or Ubuntu-Core or CenOS or Debian

In the Linux environment, fdisk utility can be used to partition and format the target as per the table above and then copy the required images (Kernel image, Rootfs) to the target.

For LSDK, `flex-builder` & `flex-installer` utility can be used to partition and install required images to target as per above layout. For more information on how to build and install LSDK using flex-builder and flex-installer, refer to Layerscape SDK user guide.

Image name	Partition
BOOTAA64.EFI, grub.cfg	EFI partition
Kernel image	boot partition
Root file system	rootfs partition

NOTE

- The `Kernel Image` should be the standard (uncompresses) kernel images build as `arch/arm64/boot/Image` (for arm64).
- The device tree has to be stored in flash at a fixed offset (board specific) as per the LSDK flash layout. For e.g. for LS1043ARDB NOR flash, default value is (`0x60F00000` to `0x60FFFFFF`). Update '`PcdFdtAddress`' PCD in platform description file (.dsc) for a different flash layout.

Sample files

- **BOOTAA64.EFI**

  Represents grub boot loader. It will load the `grub.cfg` kept in the same directory and provides grub menu to the user. The user can select the required menu entry. Follow '**Generate BOOTAA64.EFI**' for compilation steps.

- **grub.cfg**

  `grub.cfg` provides boot options to user. For example, the `grub.cfg` can be used for booting the LSDK distro.

```
set default="1"
set timeout=10

menuentry 'LSDK on QorIQ ARM64 ls1043ardb' {
    search --no-floppy --file /42013eab-02 --set root
    linux /Image console=ttyS0,115200 root=PARTUUID=42013eab-03 rootwait
rw earlycon=uart8250,mmio,0x21c0600
}
```

NOTE

The example above uses a LSDK distribution. Specific kernel boot arguments could vary per distribution.

The table below represents the configurable parameters in `grub.cfg`.

• Option	Explanation	Comments
• *search --no-floppy --file / <FileName> --set root*	Search all partitions for the given file name. First Partition containing the specified file is set at root so that Grub will look for required image (kernel image) in this partition.	For example, for LSDK, `flex-installer` will update the FileName as PARTUUID of the partition containing Kernel image. This removes the ambiguity of finding a specific partition based on UUID/LABEL when multiple devices are connected.
• *root=PARTUUID=XXXXXXXX-YY*	It represents the PARTUUID of the partition containing rootfs This is passed as boot argument to kernel.	For example, for LSDK, `flex-installer` will update it with PARTUUID of the partition containing rootfs. This make sure that correct rootfs is passed to kernel and removes the ambiguity of finding the correct rootfs based on UUID/LABEL when multiple devices are connected.
• *set timeout=N*	If defined, GRUB will wait 'N' Seconds, before booting the default menu entry.If not defined, user always has to select the required menu entry.	Adjust the timeout value as per requirement.

LSDK Distro Bootflow with UEFI

- All required files (BL2, BL33 (fip) fman and UEFI images) are stored in NOR flash.
- UEFI Boot starts from DDR
- When prompted, Press ESCAPE to select a Boot Option (UEFI SHELL/PXE Boot) OR else UEFI Boot Manager tries to boot from all boot entries starting from ‘Removable Media’ followed by ‘Network Boot’ and ‘UEFI SHELL’
- If a Removable Media (e.g. SD card) has a FAT formatted partition with */EFI/BOOT/BOOT{machine type short name}.EFI* (Ex: BOOTAA64.EFI for arm64), it will be executed by UEFI Boot Manager.
- BOOTAA64.EFI will load ‘grub.cfg’.
- grub.cfg contains menu entry for distro along with required parameter to identify kernel image and pass ‘rootfs’ path to kernel as boot argument.

Flow diagram

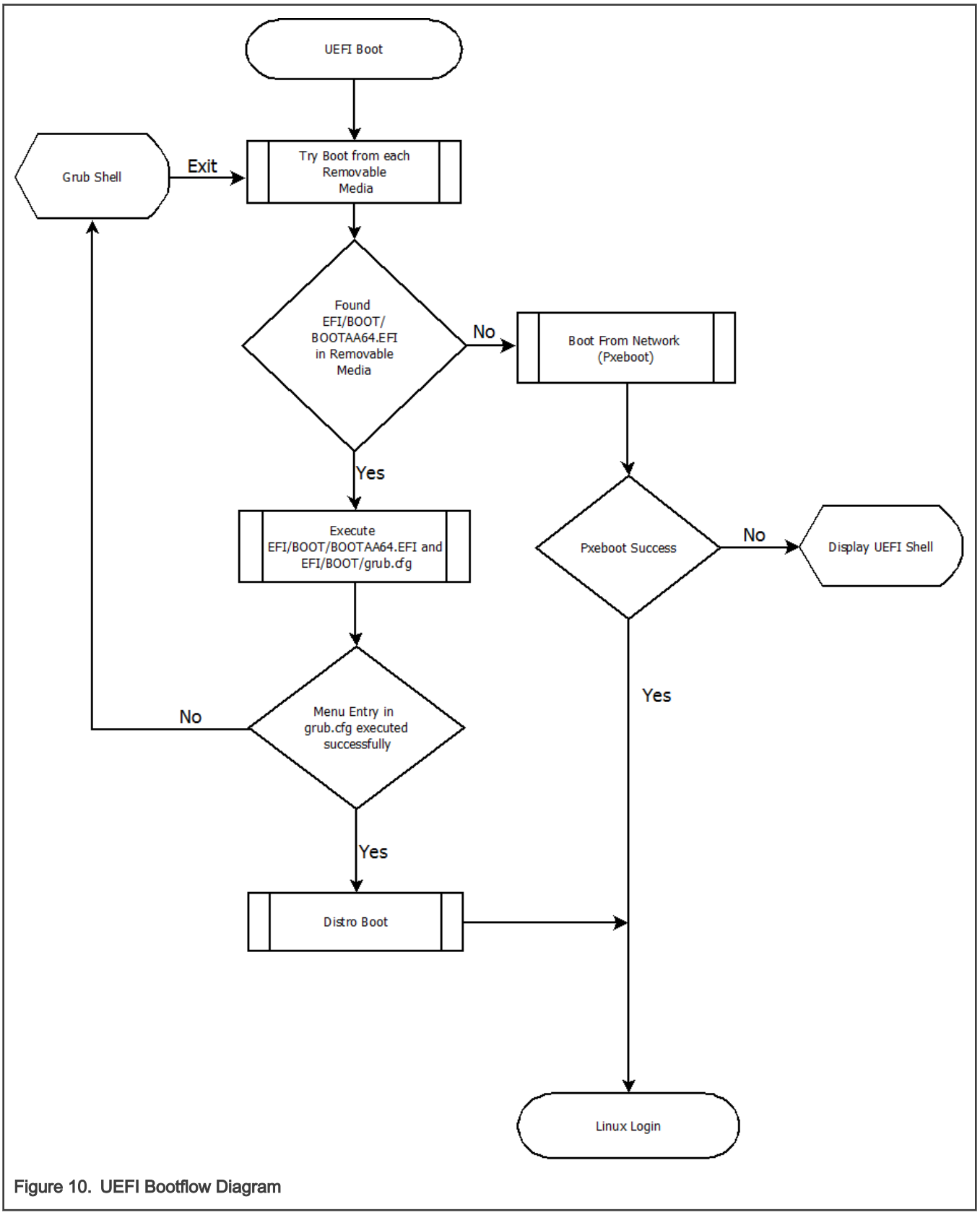

Figure 10. UEFI Bootflow Diagram

Generate BOOTAA64.EFI

Follow the steps below to compile the grub source code to generate `BOOTAA64.EFI`. In general, `BOOTAA64.EFI` is provided by the distribution like LSDK provides prebuild `BOOTAA64.EFI`.

- Get the grub source code and install the prerequisites as mentioned in INSTALL file.

```
$ git clone git://git.savannah.gnu.org/grub.git;
$ cd grub
```

- Use grub-2.02 tag.

```
$ git checkout tags/grub-2.02
```

- Set the toolchain path and set CROSS_COMPILE environment variable. See the Software Requirements section to download and install the toolchain.

```
$ export PATH=/home/user/gcc-linaro-4.9-2016.02-x86_64_aarch64-linux-gnu/bin:$PATH
$ export CROSS_COMPILE=aarch64-linux-gnu-
```

- Configure and compile source code for target (arm64)

```
$ ./autogen.sh
$ ./configure --target=aarch64-linux-gnu CPPFLAGS=-Wno-error=unused-value
$ make
```

- Create standalone GRUB image.

```
$ echo 'configfile ${cmdpath}/grub.cfg' > grub.cfg
$ grub-mkstandalone --directory=./grub-core -O arm64-efi -o BOOTAA64.EFI --modules "part_gpt
part_msdos" /boot/grub/grub.cfg=./grub.cfg
```

NOTE

- GRUB standalone application has all the modules embedded in application itself and capability to recognize different file system (ext2, ext4, and so on), thus removing the need for having a separate directory populated with all of the GRUB UEFI modules and other related files.
- 'configfile ${cmdpath}/grub.cfg' instruct GRUB EFI (BOOTAA64.EFI) to use `grub.cfg` placed in same directory. Thus, making them portable.
- Option *–modules="part_gpt part_msdos"* (with the quotes) is necessary for *${cmdpath}* feature to work properly and to recognize MBR and GPT partitioning.

Conventions for UEFI and U-Boot compatibility

UEFI needs the following firmware:

- Firmware (RCW, TF-A, Fman/MC ucode, boot loader, and so on) is in NOR flash
- Kernel image is on /boot on a mass storage device
- Root file system is in a mass storage device (/)

U-Boot must boot Linux with the dtb in NOR (not in a kernel itb) but the kernel image (not itb form) is stored in /boot. This means that U-Boot `boot.scr` must extload a kernel image but not the dtb. It is consistent with what the LSDK specification says about using `booti`.

5.4.4 Product Execution

5.4.4.1 LX2160ARDB

By default (per board switch settings), the boot loader (U-Boot) image located in FlexSPI NOR flash DEV#0 runs on power on. Press any key while U-Boot is counting down to stop U-Boot from automatically running the `bootcmd` variable and booting Linux.

As the U-Boot boots to its prompt, users can use the commands listed below to deploy new images onto the RDB.

```
$i2c mw 66 50 20; sf probe 0:0;
$tftp a0000000 <path>/fip_ddr_all.bin; sf erase 0x800000 +40000; sf write 0xa0000000 0x800000 0x40000;
$tftp a0000000 <path>/bl2_flexspi_nor.pbl; sf erase 0 +0x40000; sf write 0xa0000000 0x0 0x40000;
$tftp a0000000 <path>/fip.bin; sf erase 0x100000 +400000; sf write 0xa0000000 0x100000 0x400000;
$tftp c0000000 <path>/mc.itb; sf erase a00000 +200000;sf write c0000000 a00000 200000;
$tftp d0000000 <path>/dpl-eth.19.dtb; sf erase d00000 +c0000;sf write d0000000 d00000 c0000;
$tftp e0000000 <path>/dpc-warn.dtb; sf erase e00000 +c0000;sf write e0000000 e00000 c0000;
$tftp a0000000 <path>/fsl-lx2160a-rdb.dtb; sf erase f00000 +c0000;sf write a0000000 f00000 c0000;

Once images are flashed, reset the board to boot from device#1
$qixis_reset altbank
```

This will start booting the UEFI, UEFI boot manager can be preempted by pressing ‘esc’ key. Or UEFI will start booting as defined in boot-manager, it will start booting from PXE interfaces first.

Booting Linux

Follow below steps to boot Linux using EFI_STUB:

1. `echo "Image initrd=fsl-image-core-lx2160ardb.ext2.gz console=ttyAMA0,115200 root=/dev/ram0 earlycon=pl011,mmio32,0x21c0000 ramdisk_size=0x2000000 default_hugepagesz=1024m hugepagesz=1024m hugepages=2 pci=pcie_bus_perf" > boot.nsh`
2. Copy kernel (Image), rootfs (fsl-image-core-lx2160ardb.ext2.gz and boot.nsh to FAT32 formatted SD card and insert it into your LX2160 RDB board. You can also tftp these images on SD card from UEFI shell using either XFI/RGMII interface of DPAA or PCIe.
3. Start UEFI and goto UEFI Shell (follow above mentioned steps).
4. Go to the SD card filesystem on Shell (e.g. FS0 in attached snapshot), by inputting FS0.
5. Run `boot.nsh`

```
UEFI Interactive Shell v2.2
EDK II
UEFI v2.70 (EDK II, 0x00010000)
Mapping table
      FS0: Alias(s):HD0b:;BLK1:
          VenHw(7948A4CA-2F2E-41CA-90A2-D4420CECBBCF)/HD(1,GPT,728F8E16-5C99-784
D-B263-7E1778D03A20,0x800,0x1CE97DF)
     BLK0: Alias(s):
          VenHw(7948A4CA-2F2E-41CA-90A2-D4420CECBBCF)
Press ESC in 4 seconds to skip startup.nsh or any other key to continue.
Shell> fs0:
FS0:\> ls
Directory of: FS0:\
08/31/2018  20:50          18,616,832  Image
08/31/2018  18:25                 262  boot.nsh
09/05/2018  10:15          45,134,721  fsl-image-core-lx2160ardb.ext2.gz
          3 File(s)  63,751,815 bytes
          0 Dir(s)
FS0:\>
```

5.4.4.2 LS1043ARDB

By default (per board switch settings), the boot loader (U-Boot) image located in IFC NOR flash vbank 0 runs on power on. Press any key while U-Boot is counting down to stop U-Boot from automatically running the "`bootcmd`" variable and booting Linux.

As the U-Boot boots to its prompt, users can use the commands listed below to deploy new images onto the RDB.

```
=>  tftp 0x80000000 <path>/bl2_nor.pbl; erase 0x64000000 +$filesize; cp.b 0x80000000 0x64000000
$filesize

=> tftp 0x80000000 <path>/fip.bin; erase 0x64100000 +$filesize; cp.b 0x80000000 0x64100000 $filesize

=> tftp 0x80000000 <path>/fsl_fman_ucode_ls1043_r1.1_108_4_9.bin; protect off 0x64900000 +$filesize;
erase 0x64900000 +$filesize; cp.b 0x80000000 0x64900000 $filesize; protect on 0x64900000 +$filesize

=> tftp 0x80000000 <path>/fsl-ls1043a-rdb.dtb; protect off 0x64f00000 +$filesize; erase 0x64f00000
+$filesize; cp.b 0x80000000 0x64f00000 $filesize
```

Once images are flashed, reset the board to boot from alternate bank i.e. vbank4.

```
$cpld reset altbank
```

This will start booting the UEFI, UEFI boot manager can be preempted by pressing ‘esc’ key.

Or UEFI will start booting as defined in boot-manager, it will start booting from PXE interfaces first.

Booting Linux

Please follow below steps to boot Linux using EFI_STUB:

1. `echo "Image initrd=ramdisk_rootfs_arm64.ext4.gz console=ttyS0,115200 root=/dev/ram0 earlycon=uart8250,mmio,0x21c0500 mtdparts=60000000.nor:2m@0x100000(nor_bank0_uboot),40m@0x1100000(nor_bank0_fit),7m(nor_bank0_user), 2m@0x4100000(nor_bank4_uboot),40m@0x5100000(nor_bank4_fit),-`

```
(nor_bank4_user);7e800000.flash:1m(nand_uboot),1m(nand_uboot_env),20m(nand_fit);spi0.0:1m(uboot),5
m(kernel),1m(dtb),9m(file_system)" > boot.nsh
```

2. Copy kernel (Image), rootfs (ramdisk_rootfs_arm64.ext4.gz) and boot.nsh to FAT32 formatted SD card and insert it into your LS1043 RDB board. You can also tftp these images on SD card from UEFI shell using either XFI/RGMII/SGMII interface of DPAA or PCIe.
3. Start UEFI and goto UEFI Shell (follow above mentioned steps).
4. Go to the SD card filesystem on Shell (e.g. FS0 in attached snapshot), by inputting FS0. 4. Run `boot.nsh`

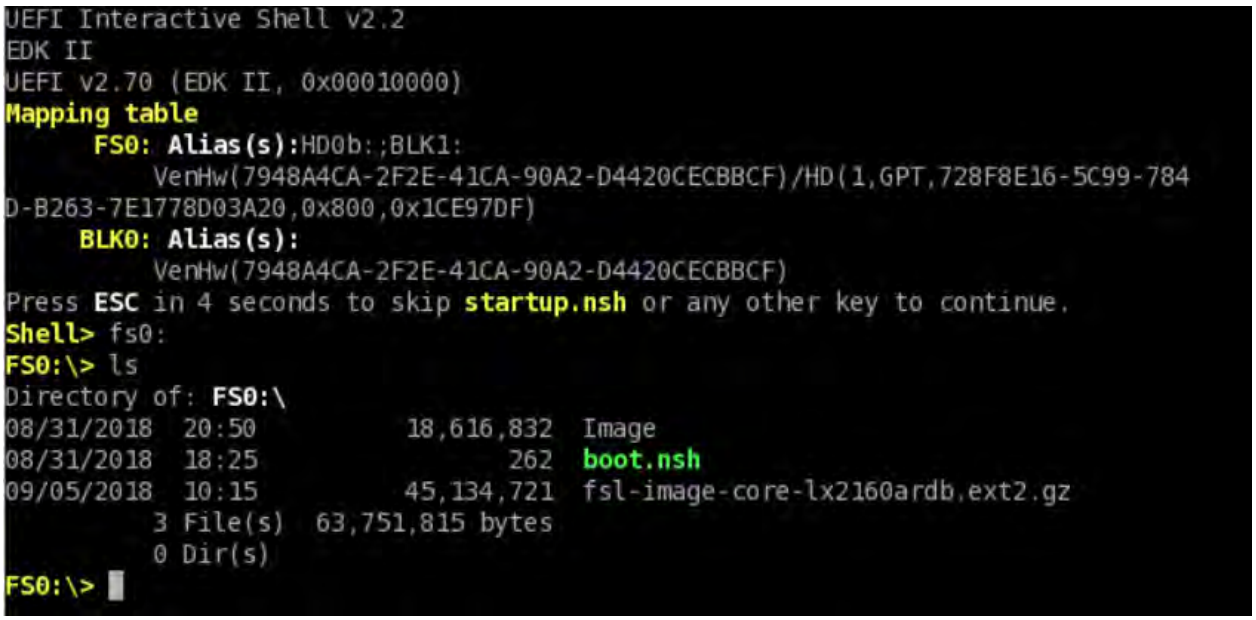

Figure 11. Booting Linux using EFI_STUB

5.4.4.3 LS1046ARDB

Booting LS1046A-RDB to UEFI prompt (via QSPI BOOT)

LS1046A QSPI flash map

Base address for Primary Bank (VBank0 (Bank 0) 64MB) is 0x40000000 and Base address for Secondary Bank (VBank4 (Bank 4) 64MB) is 0x44000000.

Flashing UEFI images on QSPI flash bank 4 (alternate QSPI flash bank)

Boot to u-boot prompt from QSPI flash primary bank (Bank 0).

• Setup serial port connection on host machine to capture logs from the target LS1046A RDB board.

• Reset the board to boot u-boot on bank 0, make sure that there is a valid u-boot image flashed there

Copy Images to QSPI flash alternate bank using following commands:

```
=> sf probe 0:1
=> setenv bl2 'tftpboot 0x82000000 bl2_qspi.pbl; sf erase 0 +$filesize && sf write 0x82000000
0 $filesize'
=> run bl2
=> setenv fip 'tftpboot 0x82000000 fip.bin; sf erase 100000 +$filesize && sf write 0x82000000
100000 $filesize'
=> run fip
=>setenv fman 'tftpboot 0x82000000 fsl_fman_ucode_ls1046_r1.0_108_4_9.bin; sf erase 900000 +$filesize
&& sf write 0x82000000 900000 $filesize'
```

```
=> run fman
=>setenv dtb 'tftpboot 0x82000000 fsl-ls1046a-rdb.dtb; sf erase f00000 +$filesize && sf write
0x82000000 f00000 $filesize'
=> run dtb

=>setenv uefi_nv 'tftpboot 0x82000000 LS1046ARDBNV_EFI.fd; sf erase 500000 +$filesize && sf write
0x82000000 500000 $filesize'
=> run uefi_nv (This is optional, needed if first fast boot needed)
```

Once images are flashed, reset the board to boot from alternate bank.

```
$cpld reset altbank
```

This will start booting the UEFI, UEFI boot manager can be preempted by pressing ‘esc’ key.

Or UEFI will start booting as defined in boot-manager, it will start booting from PXE interfaces first.

5.4.4.4 LS2088ARDB

By default (per board switch settings), the boot loader (U-Boot) image located in IFC NOR flash BANK#0 runs on power on. Press any key while U-Boot is counting down to stop U-Boot from automatically running the "`bootcmd`" variable and booting Linux.

As the U-Boot boots to its prompt, users can use the commands listed below to deploy new images onto the RDB.

```
$tftp a0000000 <path>/ bl2_nor.pbl;erase 0x584000000 +$filesize; cp.b 0xa0000000
0x584000000 $filesize';
$tftp a0000000 <path>/ fip.bin; erase 0x584100000 +$filesize; cp.b 0xa0000000 0x584100000 $filesize'
$tftp a0000000 <path>/ LS2088ARDBNV_EFI.fd; erase 0x584500000 +$filesize; cp.b 0xa0000000 0x585100000
$filesize' <If fast first boot is needed>
$tftp 0xa0000000 <path>/mc.itb ; erase 0x584A00000 0x584EFFFFF; cp.b 0xa0000000
0x584A00000 $filesize ;
$ tftp 0xa0000000 <path>/dpc.0x2A_0x41.dtb ; cp.b 0xa0000000 0x584E00000 $filesize ;
$ tftp 0xa0000000 <path>/dpl-eth.0x2A_0x41.dtb ;cp.b 0xa0000000 0x584D00000 $filesize
$ 'tftp 0x80000000 cs4315-cs4340-PHY-ucode.txt; erase 0x584980000 0x5849BFFFF ; cp.b 0x80000000
0x584980000 $filesize' <If needed flash cortina phy firmware>
$tftp 0xa0000000 <path>/fsl-ls2088a-rdb.dtb ; erase 0x584F00000 0x584FFFFFF; cp.b 0xa0000000
0x584F00000 $filesize ;
```

Once images are flashed, reset the board to boot from bank#1

```
$qixis_reset altbank
```

This will start booting the UEFI, UEFI boot manager can be preempted by pressing ‘esc’ key.

Or UEFI will start booting as defined in boot-manager, it will start booting from PXE interfaces first.

Booting Linux

Please follow below steps to boot Linux using EFI_STUB:

1. `echo "Image initrd=fsl-image-core-ls2088ardb.ext.gz console=ttyS1,115200 root=/dev/ram0 earlycon=uart8250,mmio,0x21c0600 ramdisk_size=0x2000000 default_hugepagesz=2m hugepagesz=2m hugepages=256" > boot.nsh`
2. Copy kernel (Image), rootfs (fsl-image-core-ls2088ardb.ext.gz and boot.nsh to FAT32 formatted SD card and insert it into your LS2088 RDB board. You can also tftp these images on SD card from UEFI shell using either DPAA interface or PCIe.
3. Start UEFI and goto UEFI Shell (follow above mentioned steps).
4. Go to the SD card filesystem on Shell (e.g. FS0 or FS1 in attached snapshot), by inputting FS0.

5. 4. Run `boot.nsh`

```
UEFI v2.70 (EDK II, 0x00010000)
Mapping table
      FS0: Alias(s):HD0b0b:;BLK1:
          VenHw(0D51905B-B77E-452A-A2C0-ECA0CC8D514A,000010030000000000)/USB(0x1
,0x0)/HD(1,MBR,0xC094289C,0x20000,0xA001)
      FS1: Alias(s):HD3b:;BLK7:
          VenHw(7948A4CA-2F2E-41CA-90A2-D4420CECBBCF)/HD(1,MBR,0xD55D926A,0x800,
0x1DAC400)
     BLK5: Alias(s):
          VenHw(616FE8D8-F4AA-42E0-A393-B332BDB2D3C1)
     BLK8: Alias(s):
          VenHw(DA2406B3-FEEB-455B-AF1F-C45E34888524)
     BLK6: Alias(s):
          VenHw(7948A4CA-2F2E-41CA-90A2-D4420CECBBCF)
     BLK0: Alias(s):
          VenHw(0D51905B-B77E-452A-A2C0-ECA0CC8D514A,000010030000000000)/USB(0x1
,0x0)
     BLK2: Alias(s):
          VenHw(0D51905B-B77E-452A-A2C0-ECA0CC8D514A,000010030000000000)/USB(0x1
,0x0)/HD(2,MBR,0xC094289C,0x2A001,0x200001)
     BLK3: Alias(s):
          VenHw(0D51905B-B77E-452A-A2C0-ECA0CC8D514A,000010030000000000)/USB(0x1
,0x0)/HD(3,MBR,0xC094289C,0x22A002,0x71B5FFE)
     BLK4: Alias(s):
          VenHw(0D51905B-B77E-452A-A2C0-ECA0CC8D514A,000011030000000000)/USB(0x1
,0x0)
Press ESC in 5 seconds to skip startup.nsh or any other key to continue.
Shell> fs)l
'fs)l' is not recognized as an internal or external command, operable program, o
r script file.
Shell> fs0:
FS0:\> ls
ls: File Not Found - 'FS0:\'
FS0:\> fs1:
FS1:\> ls
Directory of: FS1:\
10/24/2018  12:34          21,318,144  vmlinuz-4.14.67
10/24/2018  12:34          20,298,240  vmlinuz-4.9.124
10/24/2018  12:35          11,079,672  ramdisk_rootfs_arm64.ext4.gz
10/24/2018  12:36                 208  startup.nsh
10/24/2018  12:37          37,035,440  firmware_ls2088ardb_uboot_norboot.img
10/26/2018  05:11              26,710  fsl-ls2088a-rdb-uboot.dts
10/26/2018  05:11              20,809  fsl-ls2088a-rdb-uboot.dtb
10/26/2018  05:24                 196  boot.nsh
               8 File(s)  89,779,419 bytes
               0 Dir(s)
FS1:\> cat boot.nsh
vmlinuz-4.14.67 initrd=ramdisk_rootfs_arm64.ext4.gz console=ttyS1,115200 root=/d
ev/ram0 earlycon=uart8250,mmio,0x21c0600 ramdisk_size=0x2000000 default_hugepage
sz=2m hu[gepagesz[=2m hugepages=256

FS1:\>
```

5.4.5 LSDK Distro Boot Logs

Below steps are given to build source code, this is not necessary to build all source code. Needed source code can be build using below steps UEFI build is supported with GCC49 and GCC54, download toolchain from linaro web https://releases.linaro.org/components/toolchain/binaries/4.9-2017.01/.

1. **RCW:**

   git clone the rcw repository.

Fetch repository for RCW as:

```
$ git clone https://source.codeaurora.org/external/qoriq/qoriq-components/rcw
$ cd rcw
$ git checkout -b integration remotes/origin/integration
```

Compile RCW as:

```
$make
```

2. **Linux**:

   git clone the linux repository and prepare the cross-compile environment to build linux (install toolchain provided with Yocto).

   Fetch repository for RCW as:

```
$git clone https://source.codeaurora.org/external/qoriq/qoriq-components/linux
$ cd linux
$ git checkout -b linux-4.14.y git.kernel.org/linux-stable/linux-4.14.y
```

   Compile Linux as:

```
$source toolchain_path/environment-setup-aarch64-fsl-linux
$export LDFLAGS="--hash-style=gnu"
$make distclean
$ ./scripts/kconfig/merge_config.sh arch/arm64/configs/defconfig arch/arm64/configs/lsdk.config
$make -j4 all
```

3. **UEFI:**

   git clone the uefi repository and prepare the cross-compile environment to build uefi (install toolchain gcc-linaro-4.9-2016.02-x86_64_aarch64-linux-gnu).

   Fetch repository for RCW as:

   a. Get the edk2

```
$git clone https://source.codeaurora.org/external/qoriq/qoriq-components/uefi
$git checkout -b master remotes/origin/master
$cd edk2
TAG: LSDK-20.04
```

   b. Get the edk2-platforms

```
$git clone https://source.codeaurora.org/external/qoriq/qoriq-components/edk2-platforms
$git checkout -b edk2_upstream_re_arch remotes/origin/edk2_upstream_re_arch
TAG: LSDK-20.04
```

   Compile UEFI as:

```
$ cd edk2
$ source edksetup.sh
$ cd edk2-platforms/Platform/NXP
$ source Env.cshrc

$ Build base tools (This is one-time activity, Italic Bold text below)
// remove following files if exists
$ rm –rf (Base_dir)/edk2/Conf/build_rule.txt
$ rm –rf (Base_dir)/edk2/Conf/tools_def.txt
$ rm –rf (Base_dir)/edk2/Conf/target.txt
```

```
$ make -C (Base_dir)/edk2/BaseTools/Source/C

$ ./build.sh <SOC> <BOARD> RELEASE clean
$ ./build.sh <SOC> <BOARD> RELEASE
```

Where SoC could be LX2160, LS2088, LS1043 or LS1046

BOARD value will be RDB e.g for LS1046 build (`./build.sh LS1046 RDB RELEASE`)

Compilation will generate two files `<SOC>ARDB_EFI.fd` and `<SOC>ARDBNV_EFI.fd in edk2/Build/<SOC>aRdbPkg/RELEASE_GCC49/FV` directory.

(e.g `LS1046ARDB_EFI.fd and LS1046ARDBNV_EFI.fd` in `edk2/Build/LS1046aRdbPkg/RELEASE_GCC49/FV` directory)

If fast boot is needed, then `<SOC>ARDBNV_EFI.fd` should be flashed at 5MB offset in flash. If not flashed, UEFI will create this file on first boot, subsequent boot will be fast except first.

4. **ATF:**

This section is added for completeness, see ATF documentation and release to be in sync with latest development.

git clone the atf repository from ATF and checkout branch dev03, prepare the cross compile environment to build atf (install toolchain `gcc-linaro-7.3.1-2018.05-x86_64_aarch64-linux-gnu`).

```
$cd atf
```

Copy UEFI <SOC>ARDB_EFI.fd image and RCW into ATF folder.

NOTE

UEFI and RCW images can be taken from pre-build images.

```
$ export CROSS_COMPILE= aarch64-linux-gnu-
```

LX2160 build

```
$ make PLAT=lx2160ardb bl2 pbl BOOT_MODE=flexspi_nor RCW=rcw_2000_700_2400_19_5_2.bin
$ make PLAT=lx2160ardb bl31

Above two steps will create bl2_flexspi_nor.pbl in atf/build/lx2160ardb/release/ directory

$make PLAT=lx2160ardb fip BL33=LX2160ARDB_EFI.fd
It will create fip.bin in atf/build/lx2160ardb/release/ directory

$ tools/fiptool/fiptool create --ddr-immem-udimm-1d ddr4_pmu_train_imem.bin --ddr-immem-udimm-2d
ddr4_2d_pmu_train_imem.bin --ddr-dmmem-udimm-1d ddr4_pmu_train_dmem.bin --ddr-dmmem-udimm-2d
ddr4_2d_pmu_train_dmem.bin --ddr-immem-rdimm-1d ddr4_rdimm_pmu_train_imem.bin --ddr-immem-
rdimm-2d ddr4_rdimm2d_pmu_train_imem.bin --ddr-dmmem-rdimm-1d ddr4_rdimm_pmu_train_dmem.bin --
ddr-dmmem-rdimm-2d ddr4_rdimm2d_pmu_train_dmem.bin fip_ddr_all.bin

It will create fip_ddr_all.bin in atf directory
```

LS1043 build

```
make PLAT=ls1043ardb pbl bl2 BOOT_MODE=nor RCW=rcw_uefi_1500.bin
make PLAT=ls1043ardb fip BL33=LS1043ARDB_EFI.fd

This will create fip.bin and bl2_nor.pbl in /build/ ls1043ardb/release/ folder
```

LS1046 build

```
make PLAT=ls1046ardb bl2 pbl BOOT_MODE=qspi RCW=rcw_1600_qspiboot.bin
make PLAT=ls1046ardb fip BL33=LS1046ARDB_EFI.fd

This will create fip.bin and bl2_qspi.pbl in /build/ls1046ardb/release/ folder
```

LS2088 build

```
make PLAT=ls2088ardb pbl bl2 BOOT_MODE=nor RCW=rcw_2100.bin
make PLAT=ls2088ardb fip BL33=LS2088ARDB_EFI.fd

This will create fip.bin and bl2_qspi.pbl in build/ls2088ardb/release/ folder
```

5.4.6 PXE Boot

This section describes the steps required to boot the Linux kernel using PXE boot. UEFI is the primary bootloader. It loads the `GRUB2` bootloader image. PXE boot is used to load the kernel and root file system images .

Hardware Requirements

- **Host PC**: Ubuntu (64-bit variant with at least 2GB RAM) host is preferred to compile/build the UEFI firmware.
- **Board**: QorIQ Layerscape reference development board (RDB) with a UART cable.

Software Requirements

- To build the UEFI firmware on the Ubuntu Host, install `uuid-dev`. Run the following command:

  ```
  $ sudo apt-get install uuid-dev
  ```

- Ensure that Python (2.7 or higher) is installed on the build machine.
- DHCP server: isc-dhcp-server Version 4.2.4 or higher.
- Tftp Server: Any of below tftp server should be installed on host machine.
  - tftpd-hpa
  - atftpd
  - dnsmasq
- To build the grub bootloader on the ubuntu Host, Install Linaro GCC-4.9 toolchain on your Host machine using the following commands:

  ```
  $ wget https://releases.linaro.org/components/toolchain/binaries/4.9-2016.02/aarch64-linux-
  gnu/gcc-linaro-4.9-2016.02-x86_64_aarch64-linux-gnu.tar.xz
  $ tar -xvf gcc-linaro-4.9-2016.02-x86_64_aarch64-linux-gnu.tar.xz
  $ export PATH=/home/user/linaro_4.9_2016/gcc-linaro-4.9-2016.02-x86_64_aarch64-linux-gnu/bin:$PATH
  ```

5.4.6.1 Creating the PXE Boot Setup

Setting up DHCP server for PXE boot

1. Open `/etc/dhcp/dhcpd.conf` with write permissions on the server machine.
2. Add a configuration block for PXE boot to the file.

   ```
   host ls1043rdbboard15 {
       hardware ethernet 26:5E:3D:21:00:02;
   ```

```
    fixed-address 192.168.3.41;
    next-server 192.168.3.161;
    filename "grub.efi"
}
```

NOTE

Use the MAC address for which PXE boot entry is created.

3. Restart the dhcp server (The command below is for Ubuntu. It may change for a different Host)

```
sudo service isc-dhcp-server restart
```

4. Place the following files in the tftp server root directory with execute permission.

- `ramdisk_rootfs_arm64.ext4.gz` (Root file system) : It can be fetched using flex-builder.

  Run `flex-builder -i repo-fetch` to download the Root File System.

  Path: `packages/installer/ramdiskrfs/ramdisk_rootfs_arm64.ext4.gz`.

  See Layerscape SDK user guide for more information about flex-builder usage.

- Image (Kernel Image) : It can be generated using flex-builder.

  Run `flex-builder -c linux -a arm64` to generate kernel image (Image).

  See Layerscape SDK user guide for more information about flex-builder usage.

NOTE

Image is the standard kernel image generated at `arch/arm64/boot/Image`.

- `grub.cfg` : Below is the sample `grub.cfg` for LS1043ARDB.

```
set default="0"
function load_video {
if [ x$feature_all_video_module = xy ]; then
insmod all_video
else
insmod efi_gop
insmod efi_uga
insmod ieee1275_fb
insmod vbe
insmod vga
insmod video_bochs
insmod video_cirrus
fi
}
load_video
set gfxpayload=keep
set timeout=10
menuentry 'LSDK 1706 on QorIQ ARM64' --class red --class gnu-linux --class gnu --class os {
linux /Image console=ttyS0,115200 root=/dev/ram0 rw earlycon=uart8250,mmio,0x21c0500
ramdisk_size=500000 default_hugepagesz=2m hugepagesz=2m hugepages=256
initrd /ramdisk_rootfs_arm64.ext4.gz
}
```

NOTE

This is a sample grub configuration file for LS1043ARDB. Kernel boot arguments may change for different QorIQ LS board.

5. `grub.efi`: Grub bootloader image. The following steps can be followed to generate `grub.efi`.

```
git clone git://git.savannah.gnu.org/grub.git;cd grub
git checkout tags/grub-2.02
export PATH=/home/user/gcc-linaro-4.9-2016.02-x86_64_aarch64-linux-gnu/bin:$PATH
export CROSS_COMPILE=aarch64-linux-gnu-
./autogen.sh
./configure --target=aarch64-linux-gnu CPPFLAGS=-Wno-error=unused-value
Make
echo ' set root=(tftp)' > grub.cfg
echo 'configfile /grub.cfg' >> grub.cfg
grub-mkstandalone --directory=./grub-core -O arm64-efi -o grub.efi --modules "tftp net efinet
gzio linux efifwsetup part_gpt part_msdos font gfxterm all_video" /boot/grub/grub.cfg=./grub.cfg
```

NOTE

Please note that these steps have been validated on Ubuntu 16.04 and 18.04.

5.4.6.2 Installing the Kernel

- Boot UEFI to prompt using NOR Flash.
- Press Esc when prompted to enter the Boot Menu.
- Enter the Boot Manager

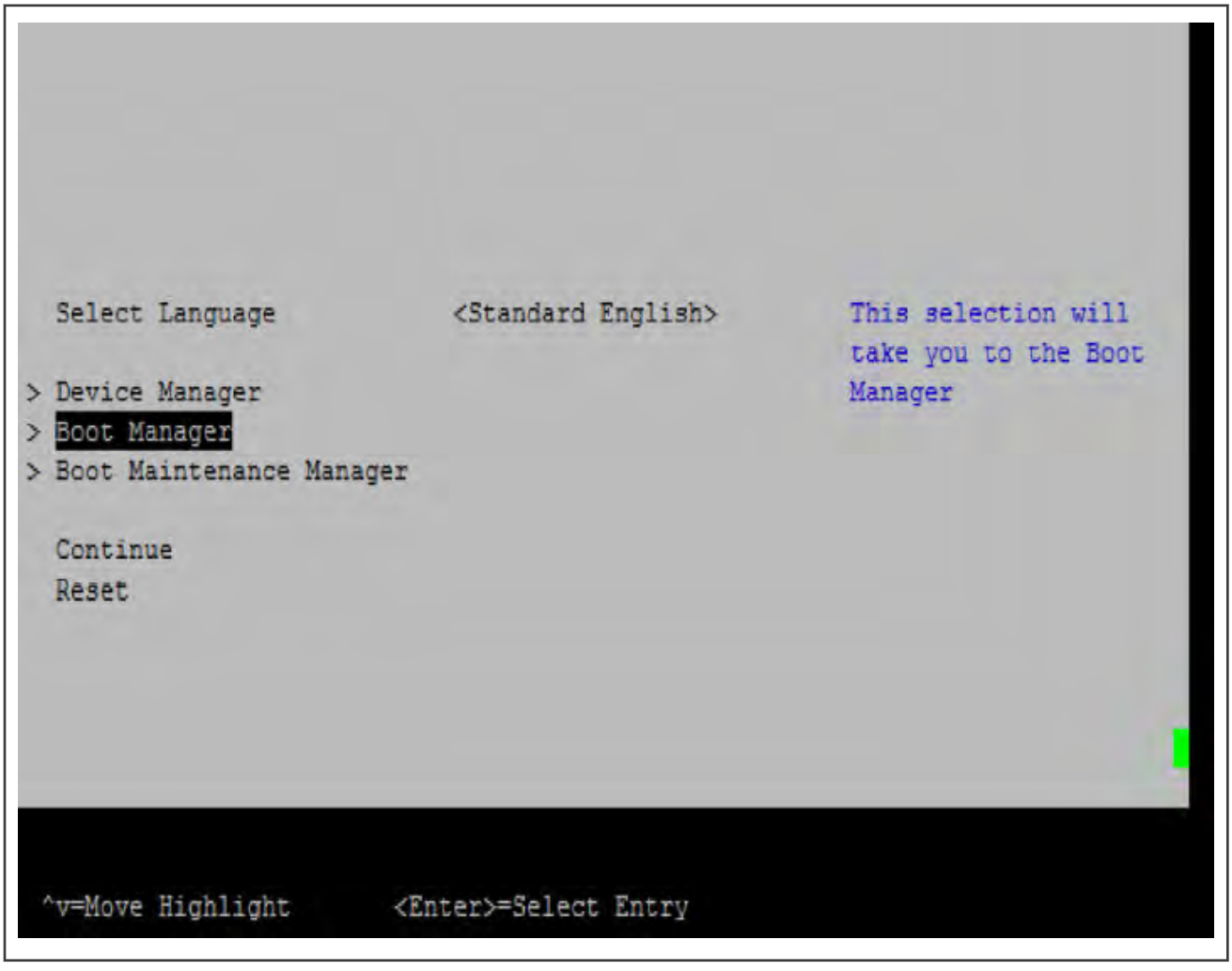

- Choose PXE boot option. Make sure that connectivity to dhcp server is fine and dhcp server is set up for PXE boot.

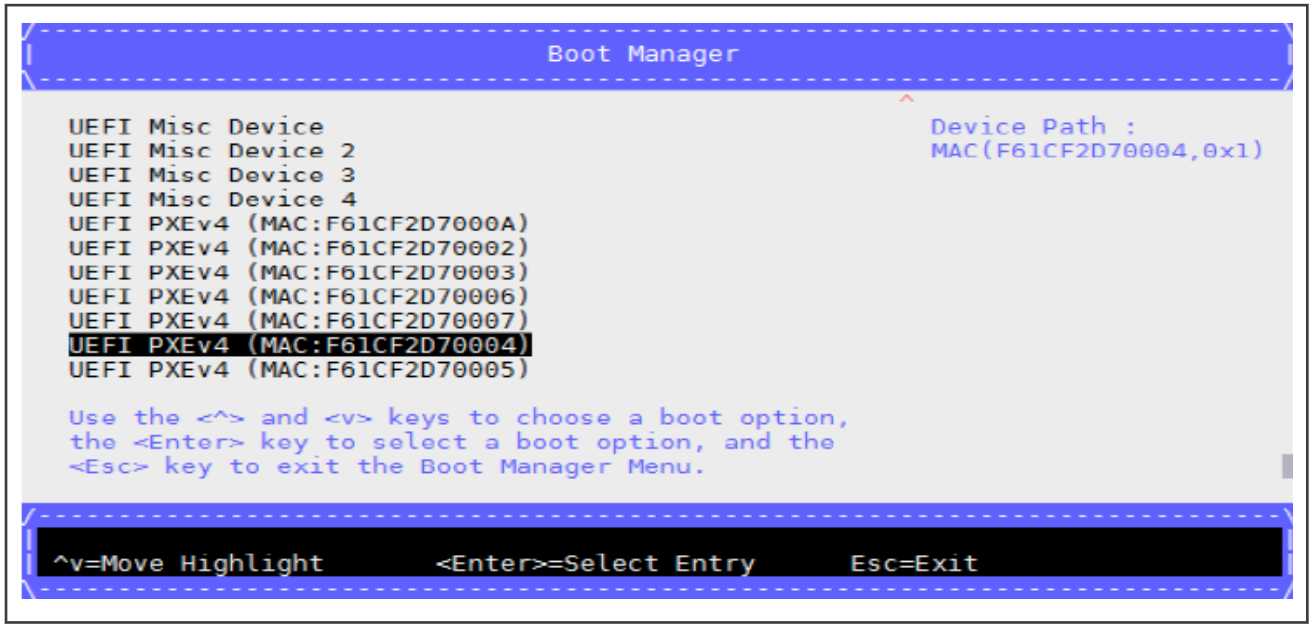

- From grub menu select the option to install linux kernel.

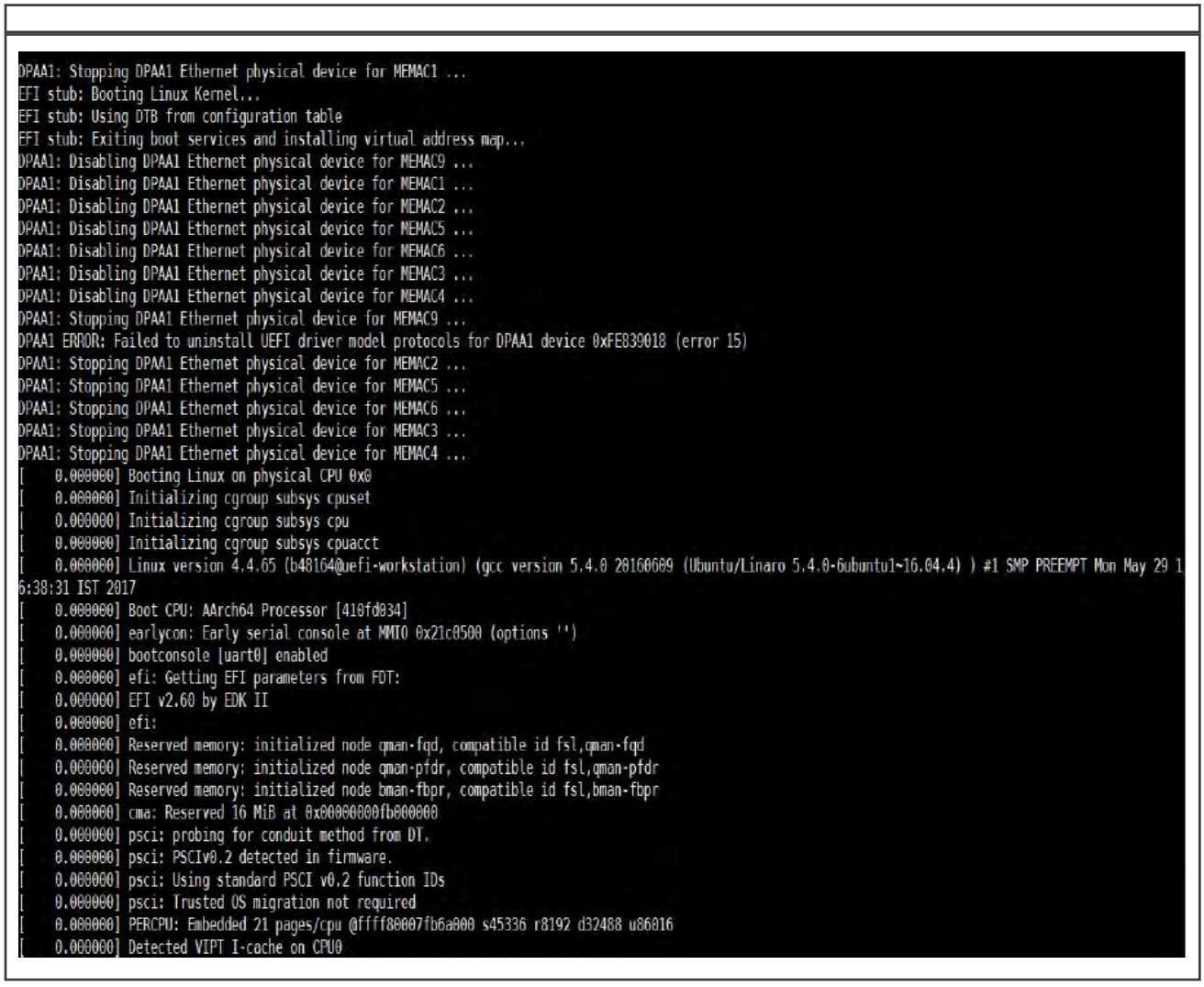

- Login after successful installation.

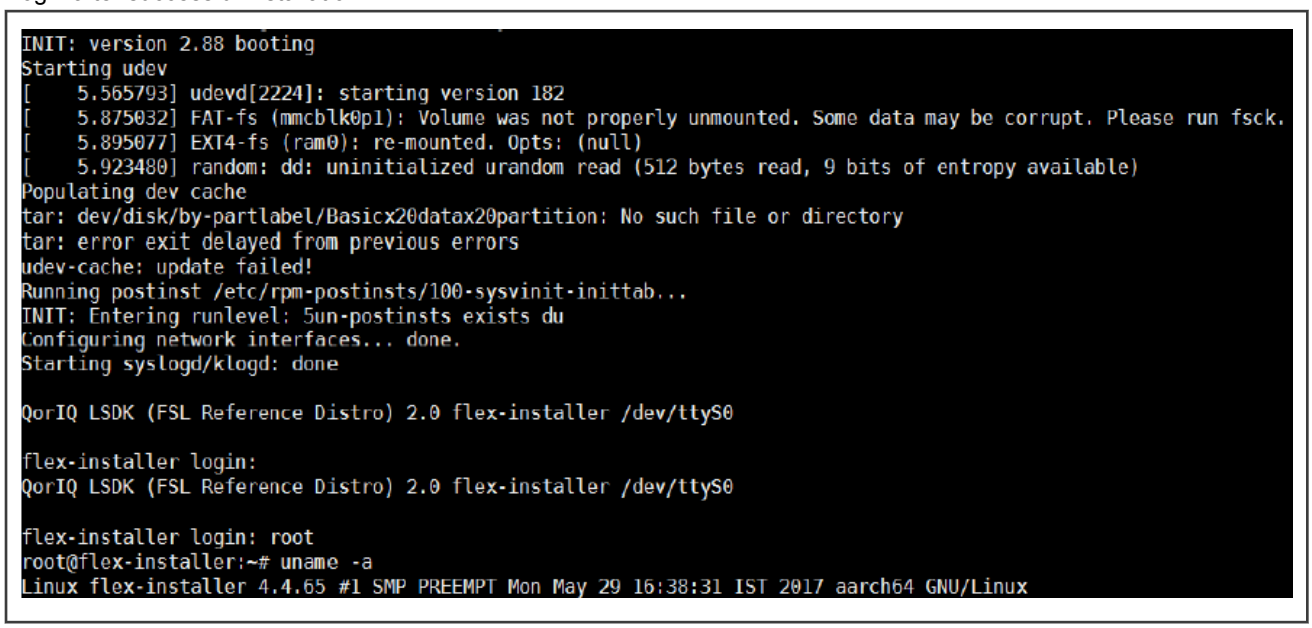

Chapter 6
Security

6.1 Secure boot

Secure boot tends to the process or mechanism for ensuring the integrity of an application running on a platform. Secure boot establishes a trust relationship among the firmware and the application running on a platform. After enabling secure boot, firmware and application signed with an approved key, only be allowed to run on that particular platform. Conversely, an application signed with blacklisted keys are disallowed from executing. In this way, a system can guard against malicious attacks, rootkits and unauthorized application updates that could happen prior to the OS launching.

Secure boot mechanism relies on public/private key pairs to verify the digital signature of all firmware and application before execution.

Refer General boot flow for information about general boot flow of an ARMv8 SoC.

Note:

Secure boot does not change the overall boot sequence. The significant difference is that secure boot involves each component (starting with the BootROM) validating the images it loads and starts. This sequence of image validations is called the “Chain of Trust (CoT)”.

Platform types:

1. Hardware Pre-Boot Loader (PBL) based
2. Service Processor (SP) based

6.1.1 Hardware Pre-Boot Loader (PBL) based platforms

6.1.1.1 Introduction

This section is intended to demonstrate the boot images validation process, to end-users. This process divided into different stages, where each stage performs a specific task and validates the subsequent stage before passing control to that stage, known as Chain of Trust (CoT).

Chain of Trust:

Chain of Trust (CoT) starts from implicit trusted components (BL1 - BootROM).

The following boot component are included in the CoT. Kindly refer Boot flow with TF-A for brief information about these components:

- BL1
- BL2
- BL31
- BL32
- BL33
- Linux

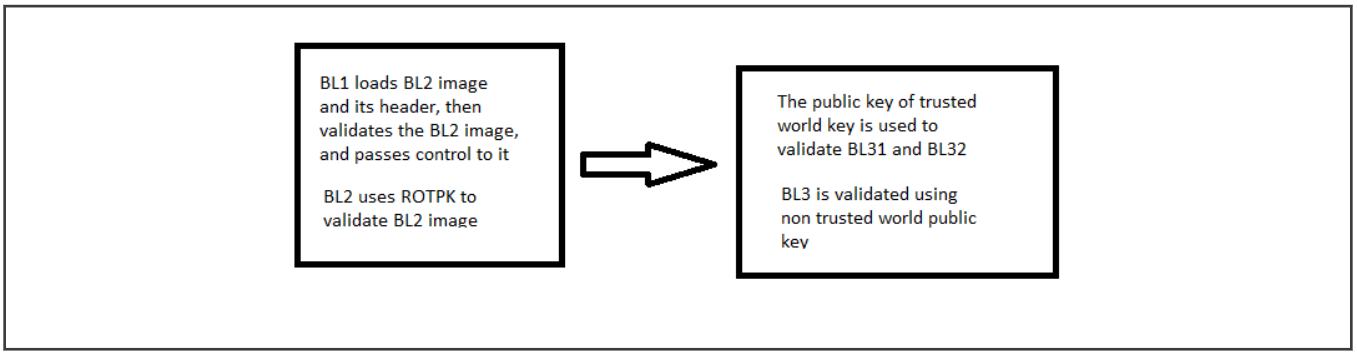

For more details on the CoT refer trusted-board-boot.rst in the TF-A repository

6.1.1.2 Secure boot process

Secure boot process uses a digital signature validation routine, already present in Internal BootROM. This routine performs,

1. Calculate the hash (SHA-256) over the given ISBC header (refer section 6.1.1.9), next level boot Image, public key/SRK table.

2. Decrypt the signature to obtain stored hash using public key and compare it with freshly calculated hash value.

If the comparison passes, the image can be considered as authentic otherwise core will go into the spin loop.

The complete process can be broken down into following phases:

- Pre-Boot Phase
    1. PBL
    2. SFP
- ISBC
- ESBC

The complete secure boot process is shown in the figure below.

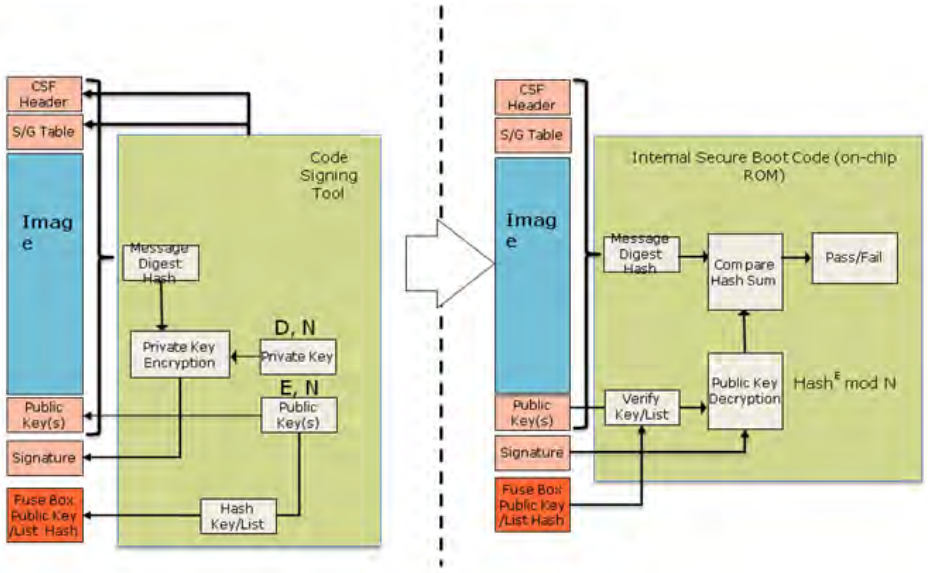

Figure 12. Secure boot process

6.1.1.3 Pre-boot phase

When the SoC is powered on, reset control logic blocks all other device activities (including scan and debug activity), until fuse values sensed accurately. The most important fuse value at this stage of operation is the ITS (Intent To Secure) bit. If you sets the ITS bit, then system operates in a secure and trusted manner.

Main components involved during this process are:

1. The Security Fuse Processor (SFP) has two roles. First, is to blow, one time programable security fuse processor registers (SFRs) during fuse provisioning (refer section 6.4). Second, is to read these provisioned values to enforce security policy in the pre-boot phase and to securely pass provisioned keys and other secret values to other hardware blocks when the system is in a trusted/secure state.

2. Pre-Boot Loader (PBL) is the micro-sequencer that can simplify system boot by configuring the DDR controllers to more optimal settings and copying code and data from low speed memory into DDR. This allows subsequent phases of boot to operate at higher speed. The value of ITS bit will determine where the PBL is allowed to read and write. PBL is mandatory when performing secure boot. At a minimum, the PBL must read a command file from a location determined by the Reset Configuration Word (RCW) and store it to the ESBC Pointer Register within the SoC. If the PBL does not perform this operation (or sets the ESBC pointer to the wrong value), the ISBC will fail to validate the ESBC. Once the PBL has completed any operations defined by its command file, the PBL is disabled until the next Power on Reset and the Boot Phase begins.

The ISBC is capable of reading from NOR flash connected to the local bus, on-chip memory configured as SRAM or main memory. Unless the ESBC is stored in NOR flash, the developer is required to create a PBL Image that copies the image to be validated from NVRAM to main memory or internal SRAM prior to writing the SCRATCHRW1 Register and executing the ISBC code.

To assist with the creation of PBL Images (for both normal and Trust systems), NXP offers a PBL Image Tool.

Note

It is possible for an attacker to perform malicious activity on board, to re-direct the PBL to the wrong non-volatile memory interface, or change the PBL Image and CSF Header pointer, however this will result in a secure boot failure and the system remaining in an idle loop indefinitely.

6.1.1.4 ISBC phase

6.1.1.4.1 ISBC code flow

As the SoC powered on, initially PBL is disabled and all external masters blocked by the PAMUs, CPU0 is released from boot hold-off and begins executing instructions from a hardwired location within the Internal BootROM. The instructions inside the Internal BootROM are NXP developed code known as the Internal Secure Boot Code (ISBC). The ISBC leads CPU0 to perform the following actions:

1. **Who am I check?** - First step is to ensure that, Master core (CPU0) comes out of reset, after POR (Power on Reset), by reading processor ID register. On failure it enters into a spin loop.
2. **Sec_Mon check** - CPU0 confirms that the Sec_Mon is in the Check state. If not, it writes ‘fail’ bit in Sec_Mon control register, which leads to a state transition.
3. **ESBC pointer read** - CPU0 reads the ESBC (External Secure Boot Code) Pointer Register, and then reads the word at the indicated address, which is the first word of the Command Sequence File Header which precedes the ESBC itself. If the contents of the word do not match a hard coded preamble value, the ISBC takes this to mean it has not found a valid CSF and cannot proceed. This leads to a fail, as described in #2 above.
4. **CSF header parsing and public key check** - If CPU0 finds a valid CSF header, it parses the CSF header to locate the public key, to be used to validate the code. There can be a single public key or a table of 4 public keys present in the header. The Secure Fuse Processor does not actually store a public key, it stores a SHA-256 hash of the public key/table of 4 keys. This is done to allow support for up to 4096b keys without an excessively large fuse block. Failure of the comparison between SRK(super root key) hash stored in SFP registers and runtime calculated hash over the public key/table, leads secure boot failure.
5. **Signature validation** - With the validated public key, CPU0 decrypts the digital signature stored with the CSF header. The ISBC then uses the ESBC lengths and pointer fields in the CSF header to calculate a hash over the code. The ISBC checks that the CSF header is included in the address range to be hashed. Option flags in the CSF header tell the ISBC whether the NXP Unique ID and the OEM Unique ID (in the Secure Fuse Processor) are included in the hash calculation. Including these IDs allows the image to be bound to a single platform. If the decrypted hash and generated hash do not match, secure boot fails.
6. **ESBC First Instruction Pointer check** - One final check is performed by the ISBC. This check confirms that the First Instruction Pointer in the CSF header falls within the range of the addresses included in the previous hash. If the pointer is valid, the ISBC writes a ‘PASS’ bit in a Sec_Mon command register, the state machine transitions to ‘Trusted’, and the OTPMK is made available to the SEC.
7. In case of failure, for Trust v2.0 devices , secondary flag is checked in the CSF header. If set, ISBC reads the CSF header pointer form SCRATCHRW3 location and repeats from step 4.

There are many reasons the ISBC could fail to validate the ESBC. Error code will be written in the SCRATCHRW2, technicians with debug access can check the SCRATCHRW2 Register to obtain an error code. For a list of error codes, refer ISBC Validation Error Codes.

6.1.1.4.2 Super Root Keys (SRKs) and signing keys

These are RSA public and private key pairs. Private keys are used to sign the boot images and public keys are used to validate these images during ISBC and ESBC phase.

Public keys are embedded in the header and the calculated hash value of SRK table is blown into SRK hash registers of SFP.

These are Hardware Bound Keys, once the hash is fused the public private key pair cannot be modified as the content of SFP registers are non-modifiable.

Keys of sizes 1k, 2k, and 4k are supported in NXP Secure boot Process.

It is the user's responsibility to tightly control access to the RSA private signature key. If this key is ever exposed, attackers will be able to generate alternate images that will pass secure boot.

If this key is lost, the user will be unable to update the images.

6.1.1.4.3 Key revocation

Trust Architecture 2.x introduces support for revoking the RSA public keys used by the ISBC to verify the ESBC. The RSA public keys used for this purpose are called Super Root Keys (SRK's).

User can use either a single key or a list of upto 4 SRK's in the Trust Arch v2.x devices.

In the NXP Code Signing Tool (CST), the user defines whether the device uses a single SRK, or offers a list of SRK's. If using a single SRK, a new flag bit in the CSF header will indicate “Key”, otherwise the flag will indicate “Key List”. Assuming key list, the user can populate a list of up to 4 SRK's for trust arch v2.x onwards platforms and can calculate a SHA-256 hash over the list. This hash is written to the SRK hash registers in the SFP.

As part of code signing, the user defines which key in the key list is to be used for validating the image. This key number is included as a new field in the CSF header.

During secure boot, the ISBC determines whether a key list is in use. If the key list is valid, the ISBC checks the key number indicated in the CSF header against the revocation fuses in the SFP’s OEM Security Policy Register (SFP_OSPR). If the key is revoked, the image validation fails.

NOTE

In order to prevent unauthorized revocation of keys, SFP provides a bit (Write Disable). If the bit is set, the Key revocation bits cannot be written to.

In regular operation, the ESBC (early Trusted S/W) needs to set the SFP Write Disable bit. When circumstances call for revoking a key, the user will use an ESBC image with “Write Disable” bit not set. So, the SFP will be in a state in which key revocation fuses can be set.

Logically after revoking the required key(s), the user would then load a new signed ESBC image with code to set the "Write Disable" bit, with new CSF header indicating which of the remaining non-revoked key to use.

So, only the possessor of a legitimate RSA private key can enable key revocation.

One possible motivation for an user to revoke an SRK is the loss of the associated RSA private key to an attacker. If the attacker has gained access to a legitimate RSA private key, and the attacker can turn on power to the fuse programming circuitry, then the attacker could maliciously revoke keys. To prevent this from being used to permanently disable the system, one SRK does not have an associated revocation fuse.

6.1.1.4.4 Alternate image support

Trust 2.0 onwards will support a primary and alternate image, where failure to find a valid image at the primary location will cause the ISBC to check a configured alternate location.

To execute, the alternate image must be validated using a non-revoked public key as defined by its CSF Header. A valid alternate image has same rights and privileges as a valid primary image.

This feature helps to reduce risk of corrupting single valid image during firmware update or as a result of flash block wear-out.

To enable this feature, create PBI with pointers for both primary and alternate images (HW PBL uses SCRATCHRW1 & SCRATCHRW3).

6.1.1.4.5 ESBC with CSF header

ESBC is the generic name for the code that the ISBC validates. A few ESBC scenarios are described in later sections.

The figure below provides an example of an ESBC with CSF (Command Sequence File) header. The CSF header includes lengths and offset which allow the ISBC to locate the operands used in ESBC image validation, as well as describe the size and location of the ESBC image itself.

Note: CSF header and ESBC header may be used synonymously in this and other NXP Trust Architecture documentation.

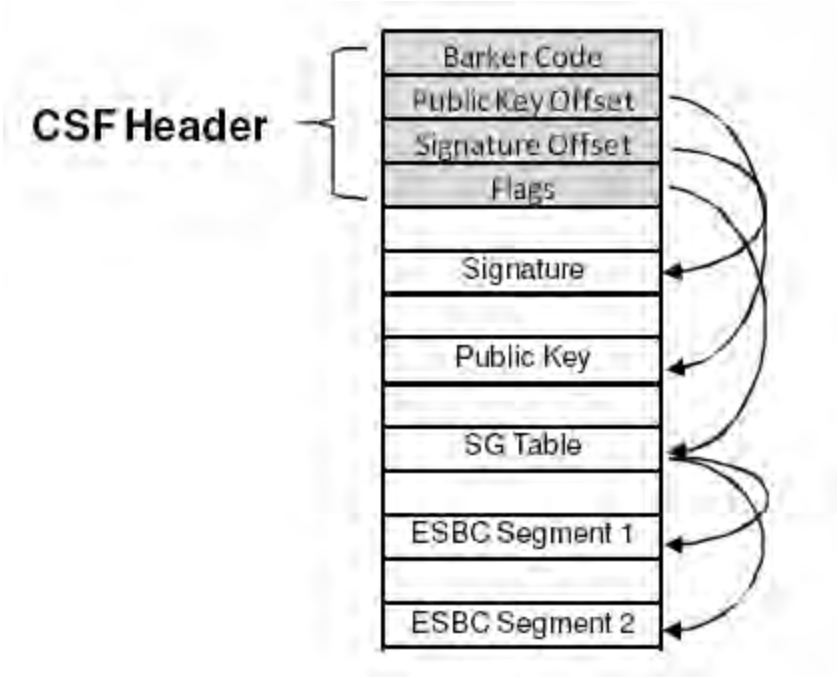

Figure 13. ESBC with CSF header

6.1.1.5 ESBC phase

Unlike ISBC, which is an internal ROM and unchangeable, ESBC is NXP – supplied reference code, and can be changed by user. ESBC is the BL2 image, which is signed using private key. BL2 loads a FIP image that includes, BL31 (EL3 runtime software) , BL32 (optional image for platform storage) and BL33 (U-Boot) and their respective ESBC headers into the DDR, then performs validation of these images.

BL33 (U-Boot) reserves a small space for storing environment variables. Typically, This space is reserved one sector above or below the U-Boot and is stored on persistent storage devices like NOR flash if macro CONFIG_ENV_IS_IN_FLASH is used. In case of secure boot, macro CONFIG_ENV_IS_NOWHERE is used. Hence, environment is compiled in BL33 (U-Boot) image and is called default environment. This default environment cannot be stored on flash devices. User won't be able to edit this environment also as cannot reach to U-Boot prompt in case of secure boot. There is default boot command for secure boot in this default environment which executes on autoboot.

ESBC validates a file called boot script and on successful validation, execute the commands in the boot script.

There are many reasons ESBC could fail to validate Client images or boot script. The error status message along with the code is printed on the U-Boot console. For a list of error codes, refer ESBC Validation Error Codes.

Users are free to use NXP ESBC as it is provided or to use it as reference to modify their own secure boot system.

NOTE

On SoC's with ARMv8 core (For example, LS1043, LS1046, and LS1012), during ISBC phase in internal BootROM, SMMU (which by default is in by-pass mode) is configured to allow only secure transactions from CAAM.

The security policy with respect to the SMMU in ESBC phase must be decided by the user/customer. So, currently in ESBC (U-Boot), SMMU is configured back to by-pass mode allowing all transactions (secure as well as non-secure).

6.1.1.5.1 Boot script

Boot script contain U-Boot commands. ESBC would validate this boot script before executing these commands.

NOTE

1. Boot script can have any commands which U-Boot supports. No checking on the allowed commands in boot script. Since it is validated image, assumption is that commands in boot script would be correct.
2. If some basic scripting error done in boot script (like unknown command, missing arguments), the required usage of that command and core is put in infinite loop.
3. After execution of commands in boot script, if control reaches back in U-Boot, error message would be printed on U-Boot console and core would be put in spin loop by command esbc_halt.
4. Scatter gather images are not supported with validate command.
5. If ITS fuse is blown, any error in verification of the image would result in system reset. The error would be printed on console before system goes for a reset.

6.1.1.5.1.1 Where to place the boot script?

NXP's ESBC U-Boot expects the boot script to be loaded in flash as specified in address map. ESBC U-Boot code assumes that the public/private key pair used to sign the boot script is same as that was used while signing the U-Boot image. If user uses different key pair to sign the image, hash of the N and E component of the key pair should be defined in macro:

- CONFIG_BOOTSCRIPT_KEY_HASH.

Note: The hash defined should be hex value, 256 bits long.

Both the above macros can be defined or changed in the configuration file secure_boot.h at the following location in U-Boot code:

```
u-boot/arch/arm/include/asm/fsl_secure_boot.h
```

Two new commands called esbc_validate and esbc_halt have been added in NXP ESBC U-Boot.

Two more commands are present, 'blob enc' and 'blob dec' for running Chain of Trust with confidentiality.

6.1.1.5.1.2 Chain of Trust

Boot script contains information about the next level of images, For example, Linux, HV, and so on. ESBC validates these images as per their public keys and then executes bootm command to pass-on the control to next image.

Users are free to use NXP ESBC as it is provided or to use it as reference to modify their own secure boot system.

The following figure shows the Chain of Trust established for validation with this ESBC U-Boot.

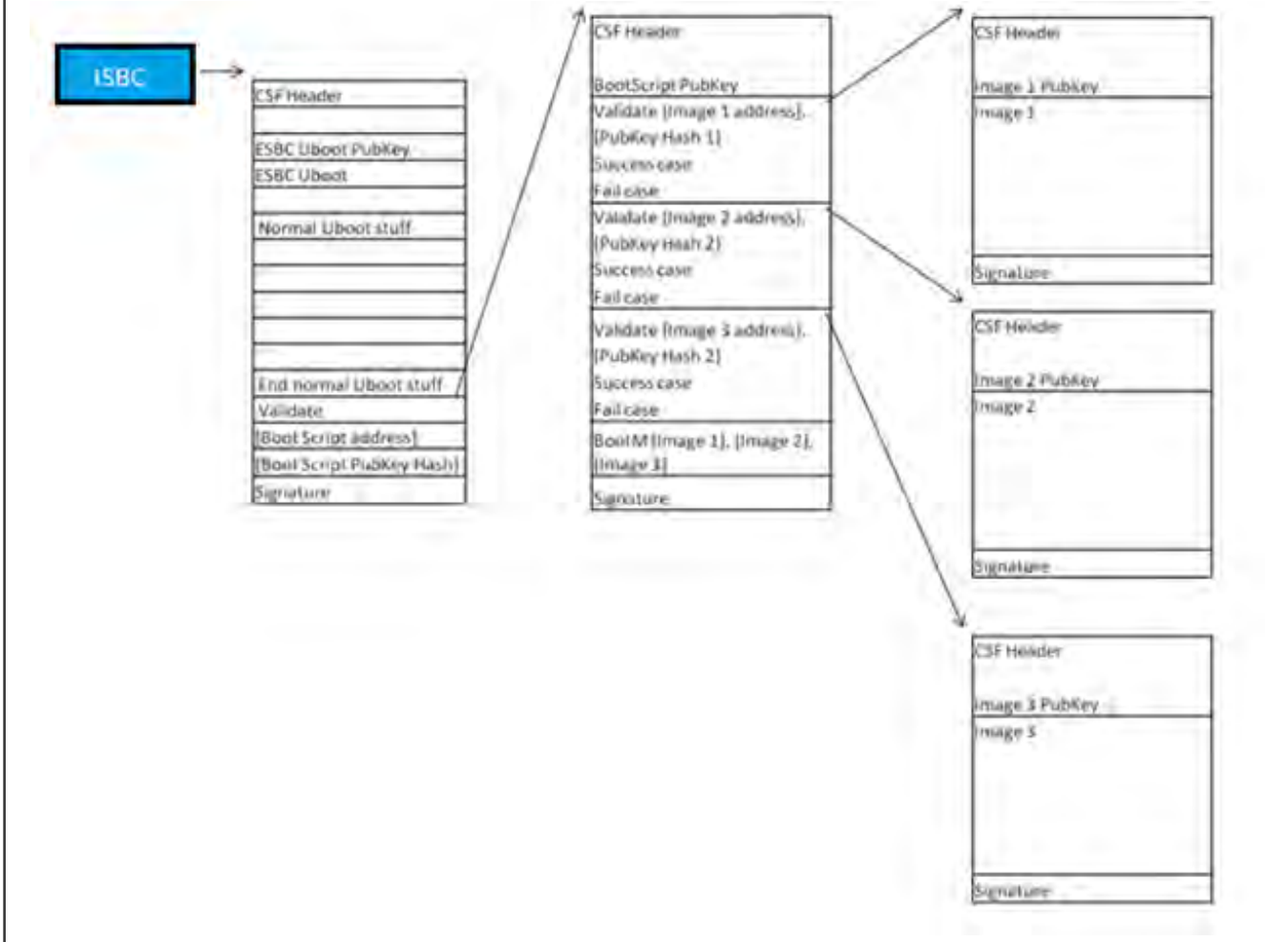

Figure 14. Secure boot flow (Chain of Trust)

6.1.1.5.1.2.1 Sample boot script

A sample boot script would look like:

```
...
esbc_validate <Img1 header addr> <pub_key hash>
esbc_validate <Img2 header addr> <pub_key hash>
esbc_validate <Img3 header addr> <pub_key hash>
...
bootm <img1 addr> <img2 addr> <img3 addr>
```

6.1.1.5.1.2.1.1 esbc_validate command

esbc_validate img_hdr [pub_key_hash]

Input arguments:

1. `img_hdr` - Location of CSF header of the image to be validated

2. `pub_key_hash` - hash of the public key used to verify the image. This is an optional parameter. If not provided, code makes the assumption that the key pair used to sign the image is same as that used with ISBC. So the hash of the key in the header is checked against the hash available in SRK fuse for verification.

Description:

The command would do the following:

- Perform CSF header validation on the address passed in the image header. During parsing of the header, image address is stored in an environment variable which is later used in source command in default secure boot command.
- Signature checks on the image

6.1.1.5.1.2.1.2 esbc_halt command

esbc_halt (no arguments)

Description:

The command would do the following:

1. This command puts core in spin loop.

After successful validation of images, bootm command in bootscript should execute and control should never reach back to U-Boot. If somehow, control reaches back to U-Boot (for example, bootm not present in bootscript), core will go in spin loop.

6.1.1.5.1.3 Chain of Trust with confidentiality

To establish Chain of Trust with confidentiality, cryptographic blob mechanism is used. In Chain of Trust with confidentiality, validated image is allowed to use the One Time Programmable Master Key (OTPMK) to decrypt system secrets.

Two boot scripts are needed to perform CoT with confidentiality.

1. **encap**
2. **decap**

encap creates a blob of the Linux images and saves them. After that, the system is booted after replacing the encap bootscript with decap bootscript which decapsulates the blobs and boot the Linux with the images.

The following figures show the Chain of Trust with confidentiality (Encapsulation and Decapsulation).

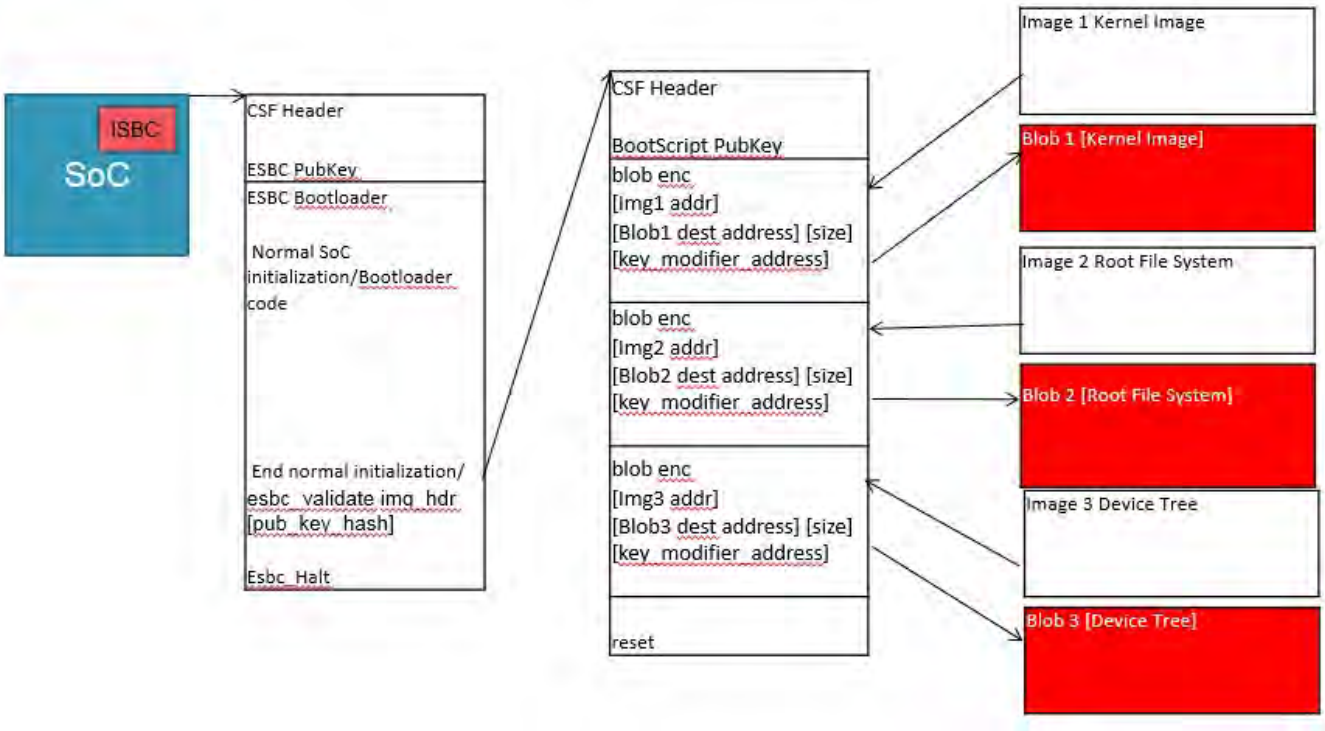

Figure 15. Chain of Trust with confidentiality (Encapsulation)

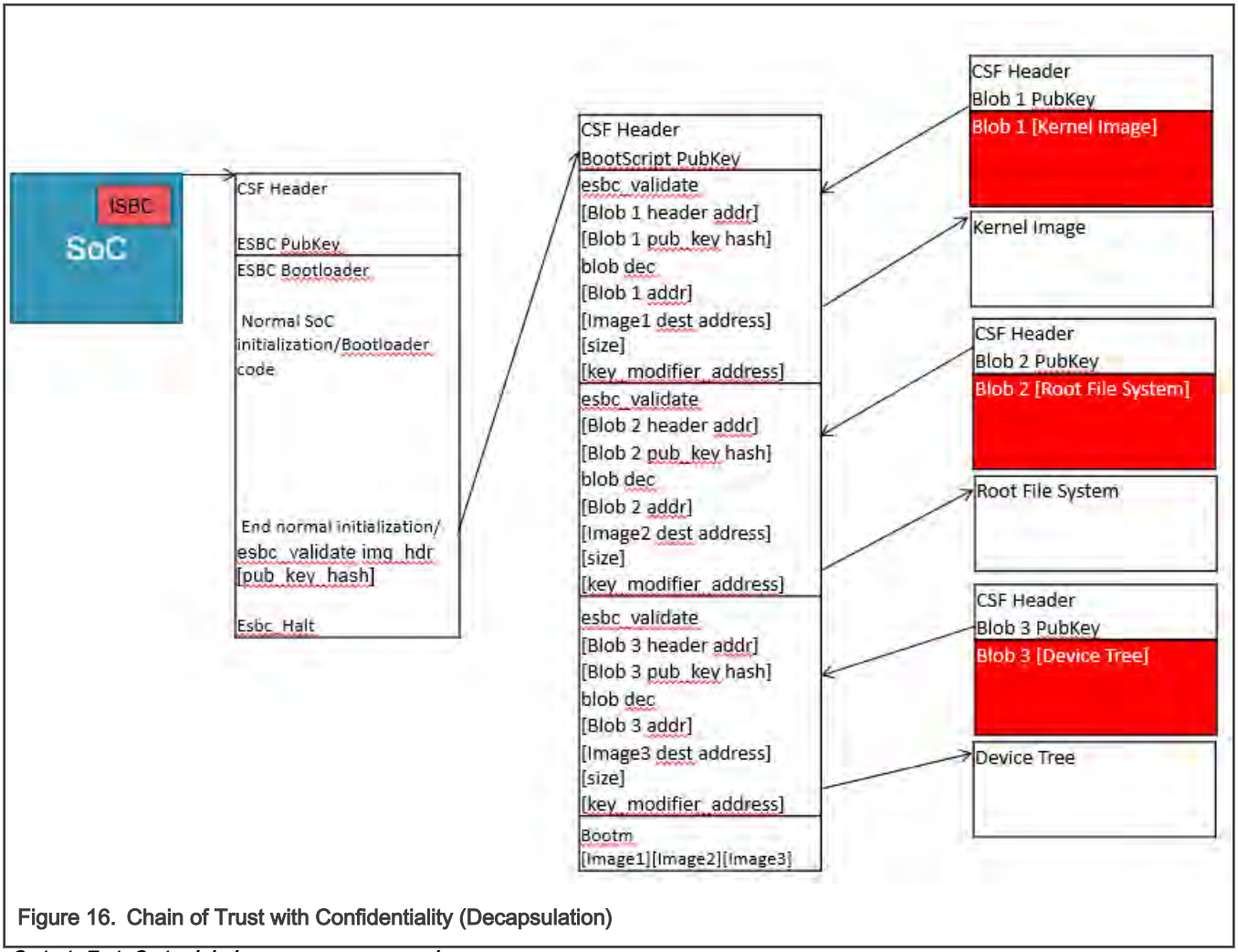

Figure 16. Chain of Trust with Confidentiality (Decapsulation)

6.1.1.5.1.3.1 blob enc command

blob enc <src location> <dst location> <length> <key_modifier address>

Input arguments:

1. `src location` - Address of the image to be encapsulated
2. `dst location` - Address where the blob will be created
3. `length` - Size of the image to be encapsulated
4. `key_modifier address` - Address where a random number 16 bytes long(key modifier) is placed

Description:

The command would do the following:

- Create a cryptographic blob of the image placed at src location and place the blob at dst location.

6.1.1.5.1.3.1.1 Sample encap boot script

A sample encap boot script would look like:

```
...
blob enc <Img1 addr> <Img1 dest addr> <Img1 size> <key_modifier address>
erase <encap Img1 addr> +<encap Imag1 size>
cp.b <Img1 dest addr> <encap Img1 addr> <encap Imag1 size>
```

```
blob enc <Img2 addr> <Img2 dest addr> <Img2 size> <key_modifier address>
erase <encap Img2 addr> +<encap Imag2 size>
cp.b <Img2 dest addr> <encap Img2 addr> <encap Imag2 size>

blob enc <Img3 addr> <Img3 dest addr> <Img3 size> <key_modifier address>
erase <encap Img3 addr> +<encap Imag3 size>
cp.b <Img3 dest addr> <encap Img3 addr> <encap Img3 size>

...
```

6.1.1.5.1.3.2 blob dec command

blob dec <src location> <dst location> <length> <key_modifier address>

Input arguments:

1. `src location` - Address of the image blob to be decapsulated
2. `dst location` - Address where the decapsulated image will be placed
3. `length` - Expected Size of the image after decapsulation.
4. `key_modifier address` - Address where key modifier (Same as that used for Encapsulation) is placed

Description:

The command would do the following:

- Decapsulate the blob placed at src location and place the decapsulated data of expected size at dst location.

6.1.1.5.1.3.2.1 Sample Decap Boot Script

A sample decap boot script would look like:

```
...
blob dec <Img1 blob addr> <Img1 dest addr> <expected Img1 size> <key_modifier address>
blob dec <Img2 blob addr> <Img2 dest addr> <expected Img2 size> <key_modifier address>
blob dec <Img3 blob addr> <Img3 dest addr> <expected Img3 size> <key_modifier address>
...
bootm <Img1 dest addr> <Img2 dest addr> <Img3 dest addr>
```

6.1.1.6 Next executable (Linux phase)

The bootloader finishes the platform initialization and passes control to the Linux. The boot-chain can be further extended to be able to sign application which would be running on Linux prompt. Further, integrate RTIC, verifies memory regions use by Security Engine (SEC), during run time.

Chain of Trust

To execute Chain of Trust, follow the steps below:

Instruction on demo:

1. Make sure that the ISBC code validate the BL2 code.
2. BL2 loads fip.bin (BL31 (Secure Firmware) + BL32 (Optional) + BL33 (U-Boot)) into the DDR and perform validation.
3. On successful validation, BL31 and BL32 passes for necessary configurations.
4. After configuration, U-Boot code runs and validates the boot script.
5. On successful validation of boot script, U-Boot code executes the commands mentioned in boot scripts.
6. Boot script also contains commands to validate next level images, such as rootfs, Linux uImage, and device tree.
7. After boot script validating all the images, U-Boot executes the **`bootm`** command to pass control to Linux.

*Rest of the content in the topic remains the same.

Chain Of trust with confidentiality

Step 1: Creating blob

1. Make sure that the ISBC code validate the BL2 code.
2. BL2 loads fip.bin (BL31 (Secure Firmware) + BL32 (Optional) + BL33 (U-Boot)) into the DDR and perform validation.
3. On successful validation, BL31 and BL32 passes for necessary configurations.
4. After configuration, U-Boot code runs and validates the boot script.
5. On successful validation of boot script, U-Boot code executes the commands mentioned in boot scripts
6. The boot script contains commands that encapsulates next level images, such as linux uImage and device tree.

Step 2: Decrypting blob and booting

1. Make sure that the ISBC code validate the BL2 code.
2. BL2 loads fip.bin (BL31 (Secure Firmware) + BL32 (Optional) + BL33 (U-Boot)) into the DDR and perform validation.
3. On successful validation, BL31 and BL32 passes for necessary configurations.
4. After configuration, U-Boot code runs and validates the boot script.
5. On successful validation of boot script, U-Boot code executes the commands mentioned in boot scripts
6. The boot script contains commands that decapsulates or decrypt next level images, such as rootfs, linux uImage and device tree.After decryption, U-Boot code executes the `bootm` command in boot script to pass control to Linux.

*Rest of the content in the topic remains the same.

Running Secure Boot (Chain Of Trust)

Change wherever ESBC U-Boot is used

6.1.1.7 Application execution

This section presents the steps need to be followed in order to properly running the software applicaiton according to its intended use and functionalities.

6.1.1.7.1 Introduction

Chain of Trust

This section presents the steps need to be followed in order to execute Chain of Trust.

Steps in the demo would be:

1. ISBC code would validate the BL2 image code.
2. On successful validation, BL2 code would run, which would then validate the BL31, BL32, BL33 images.
3. On successful validation of boot script by BL33 image, commands in boot script would be executed.
4. Boot script contains commands to validate next level images, that is, rootfs, Linux uImage, and device tree.
5. Once all the images are validated, bootm command in boot script would be executed which would pass control to Linux.

Running Secure boot (Chain of Trust)

1. Setup the board for secure boot flow. You can choose any if the flows mentioned below.
    a. **Flow A (Trusted Manufacturing Process)**

    Program the ITS fuse at the same time or after provisioning all other fuses in the SoC. See the Trust Architecture User Guide for details on the suggested Trusted Manufacturing Process.

    b. **Flow B (Prototyping)**

For prototyping phase, don't blow the ITS fuse, but use rcw with SB_EN = 1.

Blow other required fuses on the board. (OTPMK and SRK hash[1]) For more details regarding fuse blowing, CCS and Boot Hold Off, refer to Platform reference manual and Trust Architecture User Guide.

NOTE

SRK hash in the fuse should be same as the hash of the key pair being used to sign the ESBC U-Boot.

For testing purpose, the SRK Hash can be written in the mirror registers.

gen_otpmk_drbg utility in cst can be used to generate otpmk key.

2. Flash all the generated images at locations as described in the address map.
   a. **Flow A** - All the images would have to be flashed at the current bank addresses. Once ITS fuse is blown, the control would automatically shift to ISBC on power on.
   b. If you are using **Flow B**, you can use alternate bank for demo purpose. This would mean flashing the images on alternate bank addresses from Bank0 and then switching to Bank4.
3. Give a power on cycle to the board.
   a. For **Flow A** and **Flow B** (*Secure boot Images flashed on default Bank*)
      - On power on, ISBC code would get control, validate the ESBC image.
      - ESBC image would further validate the signed Linux, rootfs and dtb images
      - Linux would come up.
   b. **Flow B** (*Secure boot Images flashed on alternate Bank*)
      - On power on cycle, U-Boot prompt on bank 0 would come up.
      - On switching to alternate bank, the secure boot flow would be as mentioned in above section a, gets execute.

Two additional features are provided in secure boot:

1. Chain of Trust with confidentiality
2. ISBC Key Extension

6.1.1.7.2 Chain of Trust with confidentiality

This section presents the steps need to be followed to execute Chain of Trust with confidentiality.

The demo is divided into two parts:

1. Creating or encrypting images (uImage, Linux, dtb) in blob form
2. Decrypt the images, and boot from decrypted images.

Steps in the demo are:

Step 1: Creating blobs

1. ISBC code would validate the ESBC code.
2. On successful validation, ESBC code would run, which would then validate the boot script.
3. On successful validation of boot script, commands in boot script would be executed.

[1] Blowing of **OTPMK**is essential to run secure boot for both Production (Flow A) and Prototyping/Development (Flow B).

For **SRK Hash**,in Development Mode (Flow B), there is a workaround to avoid blowing fuses. For this use RCW with BOOT_HO = 1. This will put the core in Boot Hold off stage. Then a CCS can be connected via JTAG.

Write the SRK Hash value in SFP mirror registers and then release the core out of Boot Hold off by writing to Core Release Register in DCFG.

4. The boot script contains commands to encapsulate next level images, that is rootfs, Linux uImage and device tree

blob encapsulation command:

blob enc <src> <dst> <len> <km> - Encapsulate and create blob of data

1. **src** - The address where image to be encapsulated is present.
2. **dst** - The address where encapsulated image is stored.
3. **len** - Number of bytes to be encapsulated
4. **km** - The address where the key modifier is stored. The modifier is required and used as key for cryptographic operation. Key modifier should be 16 bytes long.

Step 2: Decrypting blob and booting

1. ISBC code would validate the ESBC code.
2. On successful validation, ESBC code would run, which would then validate the boot script.
3. On successful validation of boot script, commands in boot script would be executed.
4. The boot script contains commands to decapsulate or decrypt next level images, that is rootfs, Linux uImage, and device tree.
5. After decryption, bootm command would be executed in boot script to pass control to Linux.

blob decapsulation command:

blob dec <src> <dst> <len> <km> - Decapsulate the image and recover the data

1. **src** - The address where image to be encapsulated is present.
2. **dst** - The address where encapsulated image is stored.
3. **len** - Number of bytes to be encapsulated
4. **km** - The address where the key modifier is stored. The modifier is required and used as key for cryptographic operation. Key modifier should be 16 bytes long.

Note:

1. Blowing of **OTPMK**is essential to run secure boot for both Production (Flow A) and Prototyping/Development (Flow B).
2. For **SRK Hash**,in Development Mode (Flow B), there is a workaround to avoid blowing fuses. For this use RCW with BOOT_HO = 1. This will put the core in Boot Hold off stage. Then a CCS can be connected via JTAG.Write the SRK Hash value in SFP mirror registers and then release the core out of Boot Hold off by writing to Core Release Register in DCFG.

6.1.1.7.2.1 Other images required for the demo

Apart from SDK images described above, the following images are also required:

1. **Encap boot scrip**

```
load \$devtype \$devnum:2 \$kernelheader_addr_r /secboot_hdrs/ls1046ardb/hdr_linux.out;
esbc_validate \$kernelheader_addr_r;
load \$devtype \$devnum:2 \$fdtheader_addr_r /secboot_hdrs/ls1046ardb/hdr_dtb.out; esbc_validate
\$fdtheader_addr_r;
size \$devtype \$devnum:2 /vmlinuz; echo Encapsulating linux image;setenv key_addr 0x87000000;
mw \$key_addr $key_id_1;
setexpr \$key_addr \$key_addr + 0x4; mw \$key_addr $key_id_2;setexpr \$key_addr \$key_addr +
0x4; mw \$key_addr $key_id_3;setexpr \$key_addr \$key_addr + 0x4; mw \$key_addr $key_id_4;
blob enc \$kernel_addr_r \$load_addr \$filesize \$key_addr; setexpr blobsize \$filesize +
0x30;echo Saving encrypted linux ;save \$devtype \$devnum:2 \$load_addr /vmlinuz \$blobsize;size
\$devtype \$devnum:2 /fsl-ls1046a-rdb-sdk.dtb;
echo Encapsulating dtb image; blob enc \$fdt_addr_r \$load_addr \$filesize \$key_addr; setexpr
```

```
blobsize \$filesize + 0x30;echo Saving encrypted dtb; save \$devtype \$devnum:2 \$load_addr /fsl-
ls1046a-rdb-sdk.dtb \$blobsize; size \$devtype \$devnum:2 /ls1046ardb_dec_boot.scr;
load \$devtype \$devnum:2 \$load_addr /ls1046ardb_dec_boot.scr;
echo replacing Bootscript; save \$devtype \$devnum:2 \$load_addr /ls1046ardb_boot.scr \
$filesize;size \$devtype \$devnum:2 /secboot_hdrs/ls1046ardb/hdr_ls1046ardb_bs_dec.out;
load \$devtype \$devnum:2 \$load_addr /secboot_hdrs/ls1046ardb/hdr_ls1046ardb_bs_dec.out ;echo
Replacing bootscript header; save \$devtype \$devnum:2 \$load_addr /hdr_ls1046ardb_bs.out
\$filesize;reset;'
```

2. **Decap boot script**

```
size \$devtype \$devnum:2 /vmlinuz;setexpr imgsize \$filesize - 0x30 ;
echo Decapsulating linux image; setenv key_addr 0x87000000; mw \$key_addr $key_id_1;setexpr \
$key_addr \$key_addr + 0x4; mw \$key_addr $key_id_2;setexpr \$key_addr \$key_addr + 0x4; mw \
$key_addr key_id_3;setexpr \$key_addr \$key_addr + 0x4; mw \$key_addr $key_id_4;
 blob dec \$kernel_addr_r \$load_addr \$imgsize \$key_addr; cp.b \$load_addr \$kernel_addr_r \
$filesize ;size \$devtype \$devnum:2 /fsl-ls1046a-rdb-sdk.dtb;setexpr imgsize \$filesize - 0x30 ;
echo Decapsulating dtb image; blob dec \$fdt_addr_r \$load_addr \$imgsize \$key_addr; cp.b \
$load_addr \$fdt_addr_r \$filesize ;
```

6.1.1.7.2.2 Running secure boot (Chain of Trust with confidentiality)

1. Setup the board for secure boot flow. You can choose any of the flows mentioned below.
   a. **Flow A (Trusted Manufacturing Process)**

      Program the ITS fuse at the same time or after provisioning all other fuses in the SoC. See the Trust Architecture User Guide for details on the suggested Trusted Manufacturing Process

   b. **Flow B (Prototyping)**

      For prototyping phase, do not blow the ITS fuse, instead use rcw with SB_EN = 1.
2. Blow other required fuses on the board. (OTPMK and SRK hash)[2]) For more details regarding fuse blowing, CCS and Boot Hold Off, refer to Platform Reference Manual and Trust Architecture User Guide.

   NOTE

   SRK hash in the fuse should be same as the hash of the key pair being used to sign the ESBC U-Boot.

   For testing purpose, the SRK hash can be written in the mirror registers.

   gen_otpmk_drbg utility in cst can be used to generate otpmk key.
3. Flash all the generated images at described location in the address map.
   a. **Flow A** - All the images would have to be flashed at the current bank addresses. Once ITS fuse is blown, the control would automatically shift to ISBC on power-on.
   b. **Flow B** - You can use alternate bank for demo purpose. This would mean flashing the images on alternate bank addresses from Bank0 and then switching to Bank4.
4. Give a power on cycle to the board.
   a. For **Flow A** and **Flow B** (*Secure boot images flashed on default bank*)
      - On power-on, ISBC code would get control, validate the ESBC image.

[2] Blowing of **OTPMK**is essential to run secure boot for both Production (Flow A) and Prototyping/Development (Flow B).

For **SRK Hash**, in Development Mode (Flow B), there is a workaround to avoid blowing fuses. For this use RCW with BOOT_HO = 1. This will put the core in Boot Hold off stage. Then a CCS can be connected via JTAG.

Write the SRK Hash value in SFP mirror registers and then release the core out of Boot Hold off by writing to Core Release Register in DCFG.

- **First Boot: encapsulation Step (Should happen in OEM's premises)**
    i. By default the encap and decap boot scripts will be installed in the boot partition.
    ii. When the board boots up for the first time after all images have been generated, encap boot script will execute. This boot script:
        i. Authenticates and encapsulates Linux and dtb images and replaces the unencrypted Linux and dtb images with newly encapsulated Linux and dtb.
        ii. Replace the encap boot script and header with the decap boot script and it's header, already present in the boot partition.
        iii. Issues reset

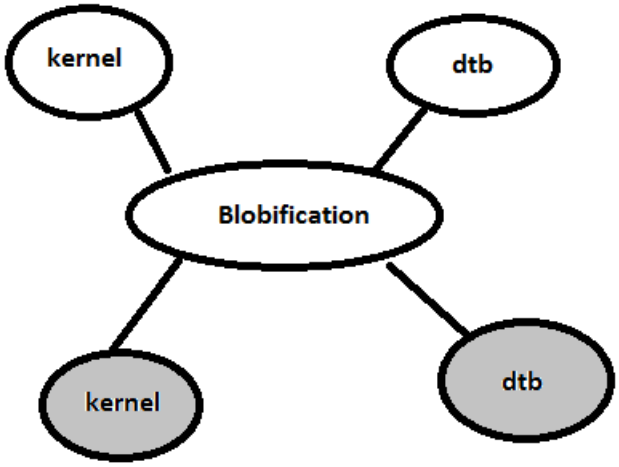

- **Subsequent Boot** .
    i. U-Boot would execute script with decap commands
        i. De-blobify Linux and dtb image in DDR.
        ii. Pass control to these images.

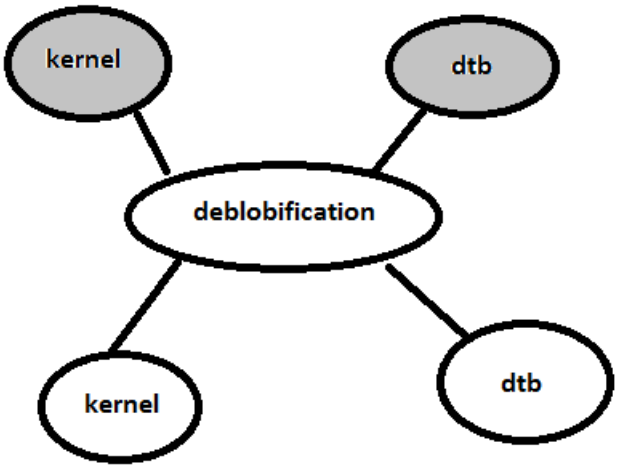

b. **Flow B** (*Secure boot images flashed on alternate bank*)

- On power-on cycle, U-Boot prompt on bank0 would come up.
- On switching to alternate bank, the secure boot flow as mentioned above would execute.

6.1.1.8 Troubleshooting

Table 25. Troubleshooting

	Symptoms	Reasons and/or Recommended actions
1.	No print on UART console.	• Check the status register of Sec_Mon block (location 0xfe314014). Refer to the details of the register from the Reference Manual. Bits OTPMK_ZERO, OTPMK_SYNDROME and PE should be 0 otherwise there is some error in the OTPMK fuse blown by you. • If OTMPK fuse is correct (see Step 1), check the SCRATCHRW2 register for errors. Depending on the execution phase, refer to ISBC Validation Error Codes and ESBC Validation Error Codes for error codes. • If **Error code = 0** then check the Security Monitor state in HPSR register of Sec_Mon. **Sec_Mon in Check State (0x9)** If ITS fuse = 1, then it means ISBC code has reset the board. This may be due to the following reasons: 1. Hash of the public key used to sign the ESBC U-Boot does not match with the value in SRK hash fuse 2. Signature verification of the image failed **Sec_Mon in Trusted State (0xd) or Non-Secure State (0xb)** 1. Check the entry point field in the ESBC header. It should be 0xcfffffffc for the demo described in Next executable (Linux phase).

Table continues on the next page...

Table 25. Troubleshooting (continued)

	Symptoms	Reasons and/or Recommended actions
		2. If entry point is correct, ensure that U-Boot image has been compiled with the required secure boot configuration.
2.	Instead of Linux prompt, you get a U-Boot command prompt instead of Linux prompt.	You have not booted in secure boot mode. You never get a U-Boot prompt in secure boot flow. You would reach this stage if ITS = 0 and you are using rcw where sben0 is present in its name.
3	U-Boot hangs or board resets	Some validation failure occurred in ESBC U-Boot. Error code and description would be printed on U-Boot console.

6.1.1.9 CSF Header Data Structure

The CSF Header provides the ISBC with most of the information required to validate the image.

LS1 Platform

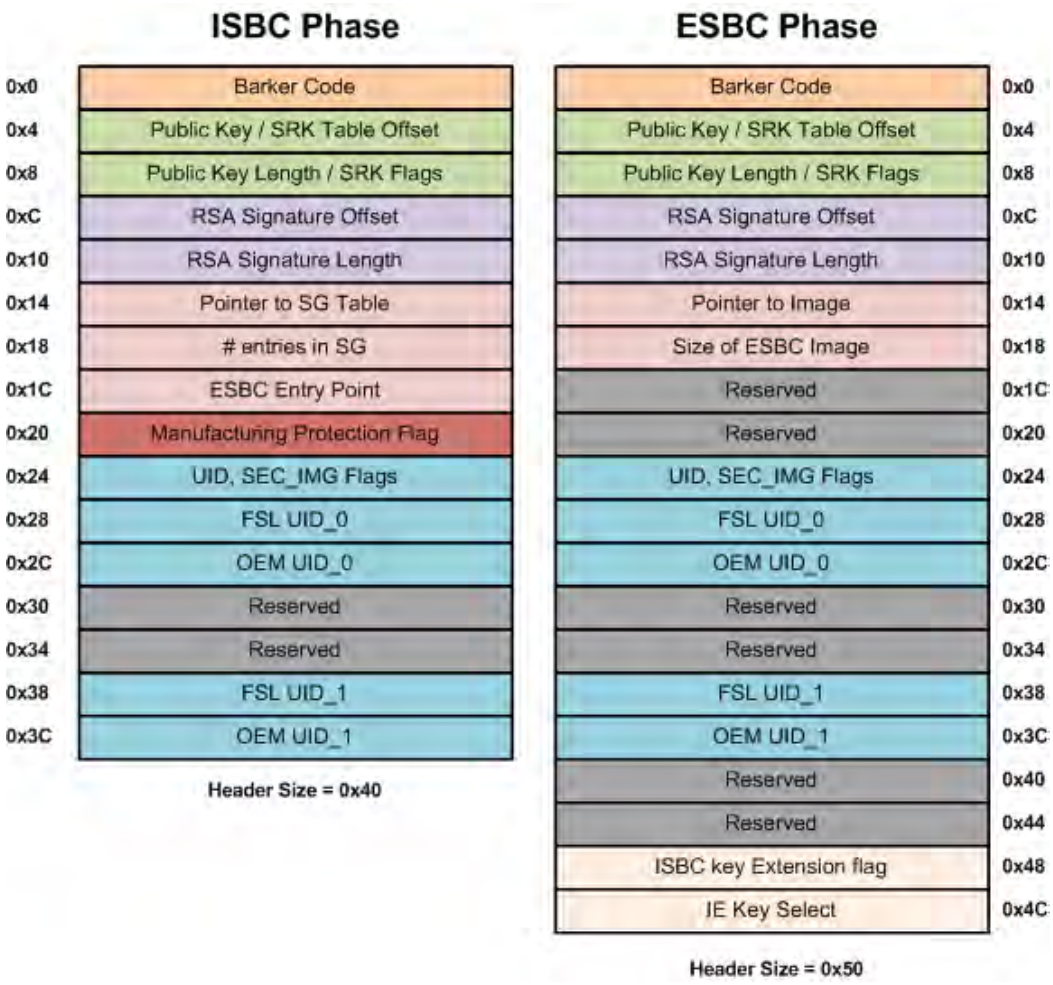

Figure 17. CSF Header for LS1 (ISBC and ESBC Phase)

Table 26. CSF Header Format (LS1 Platform)

Offset	Data Bits [0:31]
0x00-0x03	**Barker code**. This location should contain the value: 0x68392781. The ISBC code searches for this Barker code. If the value in this location does not match the Barker code, the ISBC stops execution and reports error.
0x07-0x04	If the srk_table_flag is not set: • **Public key offset**: This location contains an address which is the offset of the public key from the start of CSF header. Using this offset and the public key length, the public key is read. If srk_table_flag is set: • **SRK table offset**: This location contains an address which is the offset of the SRK table from the start of CSF header. Using this offset and the number of entries is SRK Table, the SRK table is read.
0x08	**SRK table flag**. This flag indicates whether hash burnt in SRK fuse is of a single key or of SRK table.
0x0b-0x09	If the srk_table_flag is not set: • **0x0b-0x9** -- **Public key length**: This location contains the length of the public key in bytes. If srk_table_flag is set: • **0x09** – **Key Number from SRK table** which is to be used for verification. • **0x0b-0x0a** – **Number of entries in SRK table**. Minimum number of entries in table = 1, Maximum = 4.
0x0f-0x0c	**RSA Signature offset**. This location contains an offset(in bytes) of the RSA signature from the start of CSF header. Using this offset and the Signature length, the RSA signature is read. The RSA signature is calculated over CSF Header, Scatter Gather table and ESBC images.
0x13-0x10	**RSA Signature length** in bytes.
0x17-0x14	**For ISBC Phase**: **SG Table offset** This location contains an address which is the offset of the SG table from the start of CSF header. Using this offset and the number of entries is SG Table, the SG table is read. **For ESBC Phase**: Address of the image to be validated.
0x1b-0x18	**For ISBC Phase**: **Number of entries in SG Table** (Earlier, based on the Scatter gather flag in CSF Header, this location can either be treated as number of entries in SG table or ESBC image size in bytes.). **For ESBC Phase** **Size of image** to be validated

Table continues on the next page...

Table 26. CSF Header Format (LS1 Platform) (continued)

Offset	Data Bits [0:31]
0x1f-0x1c	**For ISBC Phase**: **ESBC entry point**. ISBC transfers control to this location upon successful validation of ESBC image(s). **For ESBC Phase**: Reserved
0x21-0x20	**Manufacturing Protection Flag** Indicates if manufacturing protection has to be enabled or not in ISBC.
0x23-0x22	**Reserved**. (Earlier this field was SG Flag. SG flag is always assumed to be 1 in unified implementation.)
0x24	For ISBC Phase: Reserved For ESBC Phase: Reserved
0x25	**For ISBC Phase** **Secondary Image flag** Indicates if user has a secondary image available in case of failures in validating primary image. Valid in case of primary image Header. **For ESBC Phase**: Reserved
0x27-0x26	**Unique ID Usage** This location contains a flag which specifies one of these possibilities • 0x00 - No UID's present • 0x01 - FSL UID and OEM UID are present • 0x02 - Only FSL UID is present • 0x04 - Only OEM UID is present
0x2b-0x28	**NXP unique ID 0** Upper 32 bits of a unique 64-bit value, which is specific to NXP. This value is compared with the FSL ID 1 in Secure Fuse Processor 's FSL-ID registers
0x2f-0x2c	**OEM unique ID 0** Upper 32 bits of a unique 64-bit value, which is specific to OEM. This value is compared with the OEM ID 0 in Secure Fuse Processor 's OEM-ID registers
0x37-0x30	Reserved
0x3b-0x38	**NXP unique ID 1** Lower 32 bits of a unique 64-bit value, which is specific to NXP. This value is compared with the FSL ID 1 in Secure Fuse Processor 's FSL-ID registers
0x3f-0x3c	**OEM unique ID 1**

Table continues on the next page...

Table 26. CSF Header Format (LS1 Platform) (continued)

Offset	Data Bits [0:31]
	Lower 32 bits of a unique 32-bit value, which is specific to OEM. This value is compared with the OEM ID 1 in Secure Fuse Processor 's OEM-ID registers
0x40-0x47	For ISBC Phase: Not Applicable For ESBC Phase: Reserved
0x48-0x4b	**For ISBC Phase**: Not Applicable **For ESBC Phase**: **ISBC key Extension flag** If this flag is set, key to be used for validation needs to be picked up from IE Key table.
0x4c-0x4f	**For ISBC Phase**: Not Applicable **For ESBC Phase**: **IE Key Select** Key Number to be used from the IE Key Table if IE flag is set.

Table 27. Scatter Gather Table Format (LS1 Platform)

Offset	Data Bits [0:31]
0x00-0x03	Length. This location specifies the length in bytes of the ESBC image 1.
0x04-0x07	Target where the ESBC Image 1 can be found. This field is ignored in case of PBL-based SoCs.
0x08-0x0b	Source Address of ESBC Image 1
0x0c-0x0f	Destination Address of ESBC Image 1 If the target address is 0xffffffff, the image is not copied to the target. This field is ignored in case of PBL-based SoCs.
0x10-0x13	Length. This location specifies the length in bytes of the ESBC image 2.
0x14-0x17	Target where the ESBC Image 2 can be found. This field is ignored in case of PBL-based SoCs.
0x18-0x1b	Source Address of ESBC Image 2
0x1c-0x1f	Destination Address of ESBC Image 2 If the target address is 0xffffffff, the image is not copied to the target. This field is ignored in case of PBL-based SoCs.

Table 28. Signature (LS1 Platform)

Offset	Data Bits [0:31]
0x00-size	The RSA signature calculated over CSF Header, Scatter Gather table and ESBC image(s).

Table 29. Public key (LS1 Platform)

Offset	Data Bits [0:31]
0x00-size	Public Key Value. The hash of this public key is compared with the hash stored in Secure Fuse Processor SRK hash registers.

Table 30. SRK Table (LS1 Platform)

Offset	Data Bits [0:31]
0x00-0x03	Key 1 length
0x04-0x403	Key 1 value. (Remaining bytes will be padded with zero)
0x404-0x407	Key 2 length
0x408-0x807	Key 2 value. (Remaining bytes will be padded with zero)
0x808-0x80b	Key 3 length
0x80c-0xb0b	Key 3 value. (Remaining bytes will be padded with zero)
0xb0c-0xb0f	Key 4 length
0xb10-0xe10	Key 4 value. (Remaining bytes will be padded with zero)

LS1043/LS1046/LS1012 Platforms

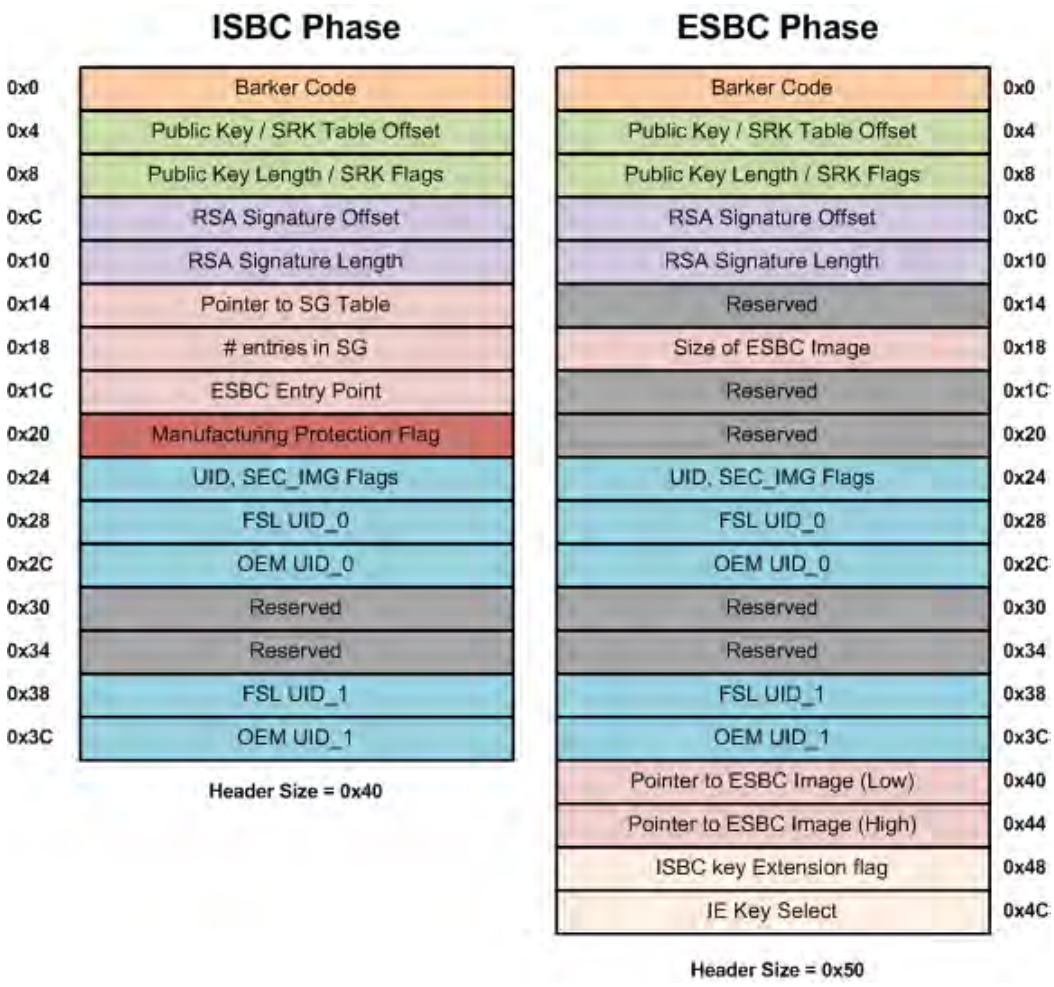

Figure 18. CSF Header for LS1043/LS1046//LS1012 (ISBC and ESBC Phase)

Table 31. CSF Header Format (LS1043/LS1046/LS1012 Platforms)

Offset	Data Bits [0:31]
0x00-0x03	**Barker code**. This location should contain the value: 0x68392781. The ISBC code searches for this Barker code. If the value in this location does not match the Barker code, the ISBC stops execution and reports error.
0x07-0x04	If the srk_table_flag is not set : • **Public key offset**: This location contains an address which is the offset of the public key from the start of CSF header. Using this offset and the public key length, the public key is read. If srk_table_flag is set: • **Srk table offset**: This location contains an address which is the offset of the SRK table from the start of CSF header. Using this offset and the number of entries is SRK Table, the SRK table is read.

Table continues on the next page...

Table 31. CSF Header Format (LS1043/LS1046/LS1012 Platforms) (continued)

Offset	Data Bits [0:31]
0x08	**SRK table flag**. This flag indicates whether hash burnt in SRK fuse is of a single key or of SRK table.
0x0b-0x09	If the srk_table_flag is not set: • **0x0b-0x9** -- **Public key length**: This location contains the length of the public key in bytes. If srk_table_flag is set: • **0x09** – **Key Number from SRK table** which is to be used for verification. • **0x0b-0x0a** – **Number of entries in SRK table**. Minimum number of entries in table = 1, Maximum = 4.
0x0f-0x0c	**RSA Signature offset**. This location contains an offset(in bytes) of the RSA signature from the start of CSF header. Using this offset and the Signature length, the RSA signature is read. The RSA signature is calculated over CSF Header, Scatter Gather table and ESBC images.
0x13-0x10	**RSA Signature length** in bytes.
0x17-0x14	**For ISBC Phase**: **SG Table offset** This location contains an address which is the offset of the SG table from the start of CSF header. Using this offset and the number of entries is SG Table, the SG table is read. **For ESBC Phase**: Reserved
0x1b-0x18	**For ISBC Phase**: **Number of entries in SG Table** (Earlier, based on the Scatter gather flag in CSF Header, this location can either be treated as number of entries in SG table or ESBC image size in bytes). **For ESBC Phase** **Size of image** to be validated
0x1f-0x1c	**For ISBC Phase**: **ESBC entry point**. ISBC transfers control to this location upon successful validation of ESBC image(s). **For ESBC Phase**: Reserved
0x21-0x20	**Manufacturing Protection Flag** Indicates if manufacturing protection has to be enabled or not in ISBC.
0x23-0x22	**Reserved**. (Earlier this field was SG Flag. SG flag is always assumed to be 1 in unified implementation.)
0x24	For ISBC Phase: Reserved

Table continues on the next page...

Table 31. CSF Header Format (LS1043/LS1046/LS1012 Platforms) (continued)

Offset	Data Bits [0:31]
	For ESBC Phase: Reserved
0x25	**For ISBC Phase** **Secondary Image flag** Indicates if user has a secondary image available in case of failures in validating primary image. Valid in case of primary Images's Header. **For ESBC Phase**: Reserved
0x27-0x26	**Unique ID Usage** This location contains a flag which specifies one of these possibilities • 0x00 - No UID's present • 0x01 - FSL UID and OEM UID are present • 0x02 - Only FSL UID is present • 0x04 - Only OEM UID is present
0x2b-0x28	**NXP unique ID 0** Upper 32 bits of a unique 64-bit value, which is specific to NXP. This value is compared with the FSL ID 1 in Secure Fuse Processor 's FSL-ID registers
0x2f-0x2c	**OEM unique ID 0** Upper 32 bits of a unique 64-bit value, which is specific to OEM. This value is compared with the OEM ID 0 in Secure Fuse Processor 's OEM-ID registers
0x37-0x30	Reserved
0x3b-0x38	**NXP unique ID 1** Lower 32 bits of a unique 64-bit value, which is specific to NXP. This value is compared with the FSL ID 1 in Secure Fuse Processor 's FSL-ID registers
0x3f-0x3c	**OEM unique ID 1** Lower 32 bits of a unique 32-bit value, which is specific to OEM. This value is compared with the OEM ID 1 in Secure Fuse Processor 's OEM-ID registers
0x40-0x47	**For ISBC Phase**: Not Applicable **For ESBC Phase**: 64-bit pointer to ESBC image
0x48-0x4b	**For ISBC Phase**: Not Applicable **For ESBC Phase**: **ISBC key Extension flag** If this flag is set, key to be used for validation needs to be picked up from IE Key table.
0x4c-0x4f	**For ISBC Phase**: Not Applicable

Table continues on the next page...

Table 31. CSF Header Format (LS1043/LS1046/LS1012 Platforms) (continued)

Offset	Data Bits [0:31]
	For ESBC Phase: IE Key Select Key Number to be used from the IE Key Table if IE flag is set.

Table 32. Scatter Gather Table Format (LS1043/LS1046/LS1012 Platforms)

Offset	Data Bits [0:31]
0x00-0x03	Length. This location specifies the length in bytes of the ESBC image 1.
0x04-0x07	Target where the ESBC Image 1 can be found. This field is ignored in case of PBL-based SoCs.
0x08-0x0b	Source Address of ESBC Image 1
0x0c-0x0f	Destination Address of ESBC Image 1 If the target address is 0xffffffff, the image is not copied to the target. This field is ignored in case of PBL-based SoCs.
0x10-0x13	Length. This location specifies the length in bytes of the ESBC image 2.
0x14-0x17	Target where the ESBC Image 2 can be found. This field is ignored in case of PBL-based SoCs.
0x18-0x1b	Source Address of ESBC Image 2
0x1c-0x1f	Destination Address of ESBC Image 2 If the target address is 0xffffffff, the image is not copied to the target. This field is ignored in case of PBL-based SoCs.

Table 33. Signature (LS1043/LS1046/LS1012 Platforms)

Offset	Data Bits [0:31]
0x00-size	The RSA signature calculated over CSF Header, Scatter Gather table and ESBC image(s).

Table 34. Public key (LS1043/LS1046/LS1012 Platforms)

Offset	Data Bits [0:31]
0x00-size	Public Key Value. The hash of this public key is compared with the hash stored in Secure Fuse Processor SRK hash registers.

Table 35. SRK Table (LS1043/LS1046/LS1012 Platforms)

Offset	Data Bits [0:31]
0x00-0x03	Key 1 length
0x04-0x403	Key 1 value. (Remaining bytes will be padded with zero)
0x404-0x407	Key 2 length
0x408-0x807	Key 2 value. (Remaining bytes will be padded with zero)
0x808-0x80b	Key 3 length
0x80c-0xb0b	Key 3 value. (Remaining bytes will be padded with zero)
0xb0c-0xb0f	Key 4 length
0xb10-0xe10	Key 4 value. (Remaining bytes will be padded with zero)

6.1.1.10 ISBC Validation Error Codes

LS1/LS1043/LS1046/LS1012 platforms

Errors in the system can be of following types:

1. Core Exceptions
2. System State Failures
3. Header Checking Failures
    a. General Failures
    b. Key/Signature/UID related errors
4. Verification Failures
5. SEC/PAMU errors

Table 36. Core Exceptions (LS1 platform)

Value	Code	Definition
0x1	ERROR_UNDEFINED_INSTRUCTION	Occurs if neither the processor nor any attached coprocessor recognizes the currently executing instruction.
0x2	ERROR_SWI	Software Interrupt is a user-defined interrupt instruction. It allows a program running in User mode, for example, to request privileged operations that run in Supervisor mode.
0x3	ERROR_PREFETCH_ABORT	Occurs when the processor attempts to execute an instruction that has been prefetched from an illegal address.
0x4	ERROR_DATA_ABORT	Occurs when a data transfer instruction attempts to load or store data at an illegal address.
0x5	ERROR_IRQ	Occurs when the processor external interrupt request pin is asserted (LOW) and IRQ interrupts are enabled.

Table continues on the next page...

Table 36. Core Exceptions (LS1 platform) (continued)

Value	Code	Definition
0x6	ERROR_FIQ	Occurs when the processor external fast interrupt request pin is asserted (LOW) and FIQ interrupts are enabled.

Table 37. Core Exceptions (LS1043/LS1046/LS1012 platforms)

Error Code	Value
Current EL with SP0	
ERROR_EXCEPTION_SYNC_SP0	0x01
ERROR_EXCEPTION_IRQ_SP0	0x02
ERROR_EXCEPTION_FIQ_SP0	0x03
ERROR_EXCEPTION_SERROR_SP0	0x04
Current EL with SPx	
ERROR_EXCEPTION_SYNC_SPX	0x05
ERROR_EXCEPTION_IRQ_SPX	0x06
ERROR_EXCEPTION_FIQ_SPX	0x07
ERROR_EXCEPTION_SERROR_SPX	0x08
Lower EL using AArch64	
ERROR_EXCEPTION_SYNC_L64	0x11
ERROR_EXCEPTION_IRQ_L64	0x12
ERROR_EXCEPTION_FIQ_L64	0x13
ERROR_EXCEPTION_SERROR_L64	0x14
Lower EL using AArch32	
ERROR_EXCEPTION_SYNC_L32	0x15
ERROR_EXCEPTION_IRQ_L32	0x16
ERROR_EXCEPTION_FIQ_L32	0x17
ERROR_EXCEPTION_SERROR_L32	0x18

Table 38. System State Failures (LS1/LS1043/LS1046/LS1012 platforms)

Value	Code	Definition
0x100	ERROR_CORE_NON_ZERO	ISBC is not running on CPU0
0x101	ERROR_STATE_NOT_CHECK	Sec_Mon State Machine not in CHECK state at start of ISBC. Some Security violation could have occurred.
0x102	ERROR2_STATE_NOT_CHECK	Sec_Mon State Machine not in CHECK state, when trying to transition it to Trusted/Non Secure/Soft Fail state
0x103	ERROR_SSM_TRUSTSTS	Sec_Mon State Machine not in TRUSTED state at end of ISBC.

Table 39. General Header Checking Failures (LS1/LS1043/LS1046/LS1012 platforms)

Value	Code	Definition
0x301	ERROR_ESBC_HDR_LOC	ESBC header location is not in 3.5G space
0x302	ERROR_ESBC_HEADER_BARKER	Barker code in the header is incorrect.
0x303	ERROR_ESBC_HEADER_SG_ENTRIES_NOT_IN_3_5G	SG table/ESBC image address (header address + image offset in sg table) is beyond 3.5G
0x303	ERROR_ESBC_HEADER_SG_ENTRIES_ON_OCRAM	One Entry in the SG table is on OCRAM
0x304	ERROR_ESBC_HEADER_SG_ESBC_EP	ESBC entry point in header not within ESBC address range
0x305	ERROR_SGL_ENTIRES_NOT_SUPPORTED	Number of entries in SG table exceeds maximum limit i.e 8
0x306	ERROR_ESBC_HEADER_HKAREA_LEN_ZERO	House keeping area not provided in header
0x307	ERROR_ESBC_HEADER_HKAREA_NOT_IN_3_5G	House keeping area not in 3.5G boundary
0x308	ERROR_ESBC_HEADER_HKAREA_LEN_INSUFFICIENT	Housekeeping area length provided is not sufficient.
0x309	ERROR_SG_TABLE_NOT_IN_3_5	SG Table is not in 3.5G boundary
0x309	ERROR_SG_TABLE_ON_OCRAM	SG table is on OCRAM
0x310	ERROR_ESBC_HEADER_HKAREA_NOT_4K_ALIGNED	House keeping area is not aligned to 4K boundary
0x311	ERROR_SGL_ENTRIES_SIZE_ZERO	SG table has entry with size zero.

Table 40. Key/Signature/UID related errors (LS1/LS1043/LS1046/LS1012 platforms)

Value	Code	Definition
0x320	ERROR_ESBC_HEADER_KEY_LEN	Length of public key in header is not one of the supported values.
0x321	ERROR_ESBC_HEADER_KEY_LEN_NOT_TWICE_SIG_LEN	Public key is not twice the length of the RSA signature
0x322	ERROR_ESBC_HEADER_KEY_MOD_1	Most significant bit of modulus in header is zero.
0x323	ERROR_ESBC_HEADER_KEY_MOD_2	Modulus in header is even number
0x324	ERROR_ESBC_HEADER_SIG_KEY_MOD	Signature value is greater than modulus in header
0x325	ERROR_FSL_UID	FSL_UID in ESBC Header did not match the FSL_UID in SFP if fsl uid flag Is 1
0x326	ERROR_OEM_UID	OEM_UID in ESBC Header did not match the OEM_UID in SFP if oem uid flag is 1.
0x327	ERROR_INVALID_SRK_NUM_ENTRY	Number of entries field in CSF Header is > 4 (This is when SRK_flag in header is 1)

Table continues on the next page...

Table 40. Key/Signature/UID related errors (LS1/LS1043/LS1046/LS1012 platforms) (continued)

Value	Code	Definition
0x328	ERROR_INVALID_KEY_NUM	Key number to be used from SRK table is not present in table. (This is when SRK_flag in header is 1)
0x329	ERROR_KEY_REVOKED	Key selected from SRK table has been revoked (This is when SRK_flag in header is 1)
0x32a	ERROR_INVALID_SRK_ENTRY_KEYLEN	Key length specified in one of the entries in SRK table is not one of the supported values (This is when SRK_flag in header is 1)
0x32b	ERROR_SRK_TBL_NOT_IN_3_5	SRK Table is not in 3.5G boundary (This is when SRK_flag in header is 1)
0x32b	ERROR_SRK_TBL_ON_OCRAM	SRK Table is on OCRAM
0x32c	ERROR_KEY_NOT_IN_3_5G	Key is not in 3.5G boundary
0x32c	ERROR_KEY_ON_OCRAM	Key on OCRAM

Table 41. Verification Failures (LS1/LS1043/LS1046/LS1012 platforms)

Value	Code	Definition
0x340	ERROR_HASH_COMPARE_KEY	Super Root Key Hash Comparison failure. Mismatch in the hash of the public key/SRK table as present in the header with the value in the SRK hash fuse.
0x341	ERROR_HASH_COMPARE_EM	RSA signature check failure. Signature provided by you in the header doesn’t match with the signature of the ESBC image generated by ISBC. The ESBC image loaded by you may be different than the image used while generating the signature(using CST)

Table 42. SEC/PAMU Failures (LS1/LS1043/LS1046/LS1012 platforms)

Value	Code	Definition
0x700	ERROR_SEC_ENQ	Error when enqueuing to SEC
0x701	ERROR_SEC_DEQ	Sec Block returned some error when dequeuing from it.
0x702	ERROR_SEC_DEQ_TO	Timeout when trying to deq from SEC
0x800	ERROR_PAMU	Error while programming PAACT/SPAACT tables in PAMU (For PowerPC platforms only)

6.1.1.11 ESBC Validation Error Codes

For trust arch version 1.x and 2.x.

Table 43. ESBC Validation Failures

Value	Code	Definition
0x0	ERROR_ESBC_CLIENT_MAX	NULL

Table continues on the next page...

Table 43. ESBC Validation Failures (continued)

Value	Code	Definition
0x4	ERROR_ESBC_CLIENT_HEADER_BARKER	Wrong barker code in header
0x8	ERROR_ESBC_CLIENT_HEADER_KEY_LEN	Wrong public key length in header
0x10	ERROR_ESBC_CLIENT_HEADER_SIG_LEN	Wrong signature length in header
0x11	ERROR_ESBC_CLIENT_HEADER_KEY_REVOKED	Key used to sign the image revoked
0x12	ERROR_ESBC_CLIENT_HEADER_INVALID_SRK_NUM_ENTRY	Wrong key entry
0x13	ERROR_ESBC_CLIENT_HEADER_INVALID_KEY_NUM	Selected key no. not in SRK table
0x14	ERROR_ESBC_CLIENT_HEADER_INV_SRK_ENTRY_KEYLEN	Unsupported key length of key in SRK table
0x15	ERROR_ESBC_CLIENT_HEADER_IE_KEY_REVOKED	Selected key in IE key table revoked
0x16	ERROR_ESBC_CLIENT_HEADER_INVALID_IE_NUM_ENTRY	Wrong IE Key entry
0x17	ERROR_ESBC_CLIENT_HEADER_INVALID_IE_KEY_NUM	Selected key no. not in IE Key table
0x18	ERROR_ESBC_CLIENT_HEADER_INV_IE_ENTRY_KEYLEN	Unsupported key length of key in IE Key table
0x19	ERROR_IE_TABLE_NOT_FOUND	information about IE table missing
0x20	ERROR_ESBC_CLIENT_HEADER_KEY_LEN_NOT_TWICE_SIG_LEN	Public key length not twice of signature length
0x21	ERROR_KEY_TABLE_NOT_FOUND	SRK Key/key table not found
0x40	ERROR_ESBC_CLIENT_HEADER_KEY_MOD_1	Public key Modulus most significant bit not set
0x80	ERROR_ESBC_CLIENT_HEADER_KEY_MOD_2	Public key Modulus in header not odd
0x100	ERROR_ESBC_CLIENT_HEADER_SIG_KEY_MOD	Signature not less than modulus
0x200	ERROR_ESBC_CLIENT_HEADER_SG_ESBC_EP	Entry Point error
0x400	ERROR_ESBC_CLIENT_HASH_COMPARE_KEY	Public key hash comparison failed

Table continues on the next page...

Table 43. ESBC Validation Failures (continued)

Value	Code	Definition
0x800	ERROR_ESBC_CLIENT_HASH_COMPARE_EM	RSA verification failed
0x1000	ERROR_ESBC_CLIENT_SSM_TRUSTSTS	SNVS not in TRUSTED state
0x2000	ERROR_ESBC_CLIENT_BAD_ADDRESS	Bad address error
0x4000	ERROR_ESBC_CLIENT_MISC	miscellaneous error
0x8000	ERROR_ESBC_CLIENT_HEADER_SG_ENTIRES_BAD	Incorrect entries in SG table
0x10000	ERROR_ESBC_CLIENT_HEADER_SG	No SG support
0x20000	ERROR_ESBC_CLIENT_HEADER_IMG_SIZE	Invalid Image size
0x40000	ERROR_ESBC_WRONG_CMD	Failure in command/Unknown command/Wrong arguments of boot script.
0x80000	ERROR_ESBC_MISSING_BOOTM	Bootm command missing from boot script.

6.1.1.12 Trust Architecture and SFP Information

SoC	Trust Arch. Version	SFP Version	POVDD	DRVR		OTPMK		SNVS/SFP Register to check Hamming Error
				Algo (CST)	Register to check Hamming Error	Algo (CST)	Register to check Hamming Error	
LS1020A	2.1	3.3	1.89 V	A	SFP	2	SFP	
LS1043A	2.1	3.3	1.89 V	A	SFP	2	SFP	
LS1046A	2.1	3.3	1.89 V	A	SFP	2	SFP	
LS1012	2.1	3.3	1.89 V	A	SFP	2	SFP	

6.1.2 Service Processor (SP) Based Platforms

6.1.2.1 Secure boot Introduction

There are three steps in the boot flow:

1. **Service Processor (SP) BootROM**

   SP provides pre-boot initialization and secure boot capabilities. The on-chip SP BootROM offers read-only, non-volatile storage for the BootROM code, including the internal secure boot code (ISBC) sub-routine for image validation. This BootROM is an integral part in the booting of the SOC in non-secure and secure boot modes.

2. **General Purpose Processor (GPP) BootROM**

   The on-chip GPP BootROM executes when the GPP cores are released from reset and is responsible for passing control to next step in the boot flow i.e. the boot-loader validated by the SP.

3. **Boot-loader**

   The boot-loader might further contain the External Secure Boot Code (ESBC) sub-routine, for validation of next level images.

This section is intended for end-users to demonstrate the image validation process which happens in ISBC and ESBC phases.

This section is intended to demonstrate the boot images validation process, to end-users. This process divided into different stages, where each stage performs a specific task and validates the subsequent stage before passing control to that stage, known as Chain of Trust (CoT).

The Root of Trust is already established in the ISBC code residing in the BootROM which validates the BL1(Boot-loader 1).

BL1 performs minimal SoC configuration before validating the Next Executable(s) which is/are known as ESBC image(s).

The flow includes validation of all ESBC images, by a previously validated image before its execution to form a **Chain of Trust.** The reference ESBC code also contains the functionality to form a **Chain of Trust with confidentiality** where the next level images are kept on flash after encryption.

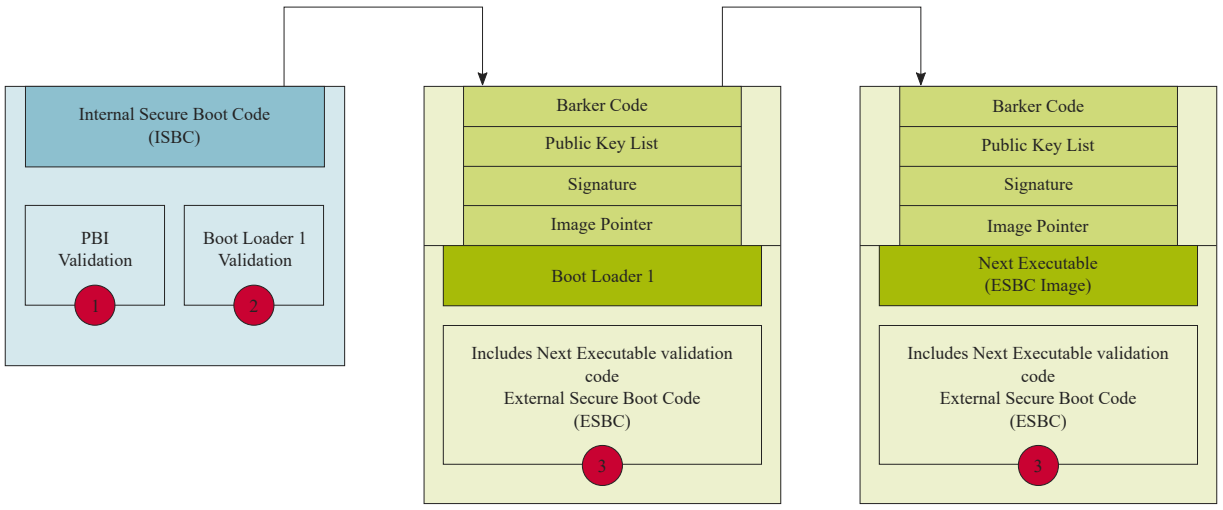

Figure 19. Chain of Trust

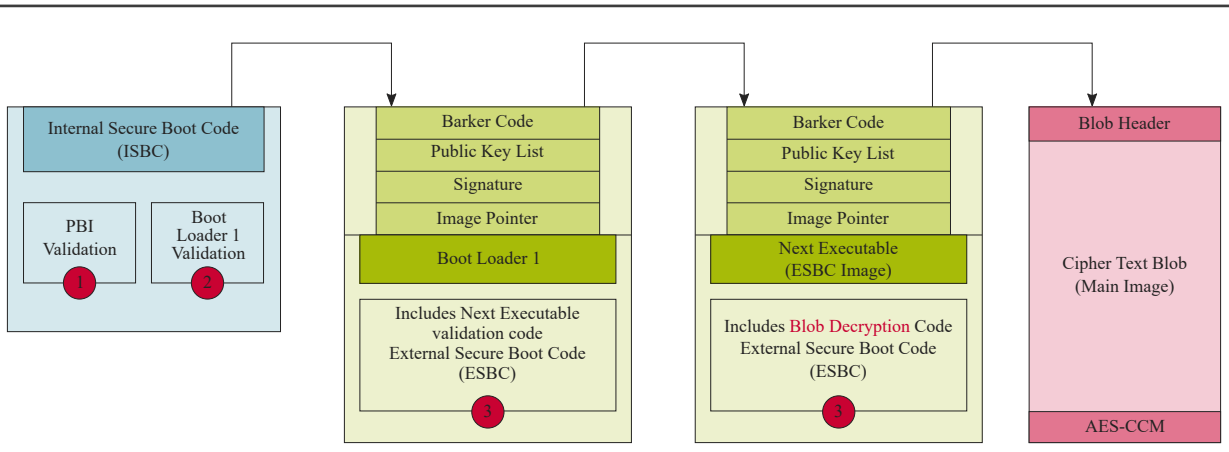

Figure 20. Chain of Trust with confidentiality

The validated ESBC image is allowed to use the One Time Programmable Master Key (OTPMK) to decrypt system secrets. Cryptographic blob mechanism is used to establish Chain of Trust with confidentiality.

CoT with confidentiality will be discussed in subsequent section later.

As depicted in figure(s) above, there are three types of images which need to be validated as part of Secure Boot.

1. PBI image by ISBC.
2. BL1 (including ESBC) image by ISBC.
3. Next level image(s) by ESBC.

Typically ESBC images would include:

Multi-stage boot-loader	In case boot-loader is split into multiple stages (typical example, in case of NAND, SD Boot in which there is a mini-boot (first stage) loader, loaded on OCRAM which is BL1 verified by ISBC. BL2 is loaded on DDR by BL1, which must be validated by the BL1 before coping into the DDR.
MC/AIOP images	Management Complex images.
Linux	The operating system to be executed on the SoC.

6.1.2.1.1 Secure boot process

Secure boot process uses a digital signature validation routine, already present in ISBC resides in SP BootROM. This routine performs,

1. Calculate the hash (SHA-256) over the given ISBC header (refer section 6.1.1.9), next level boot Image, public key/SRK table.

2. Decrypt the signature to obtain stored hash using public key and compare it with freshly calculated hash value.

If the comparison passes, the image can be considered as authentic otherwise core will go into the spin loop.

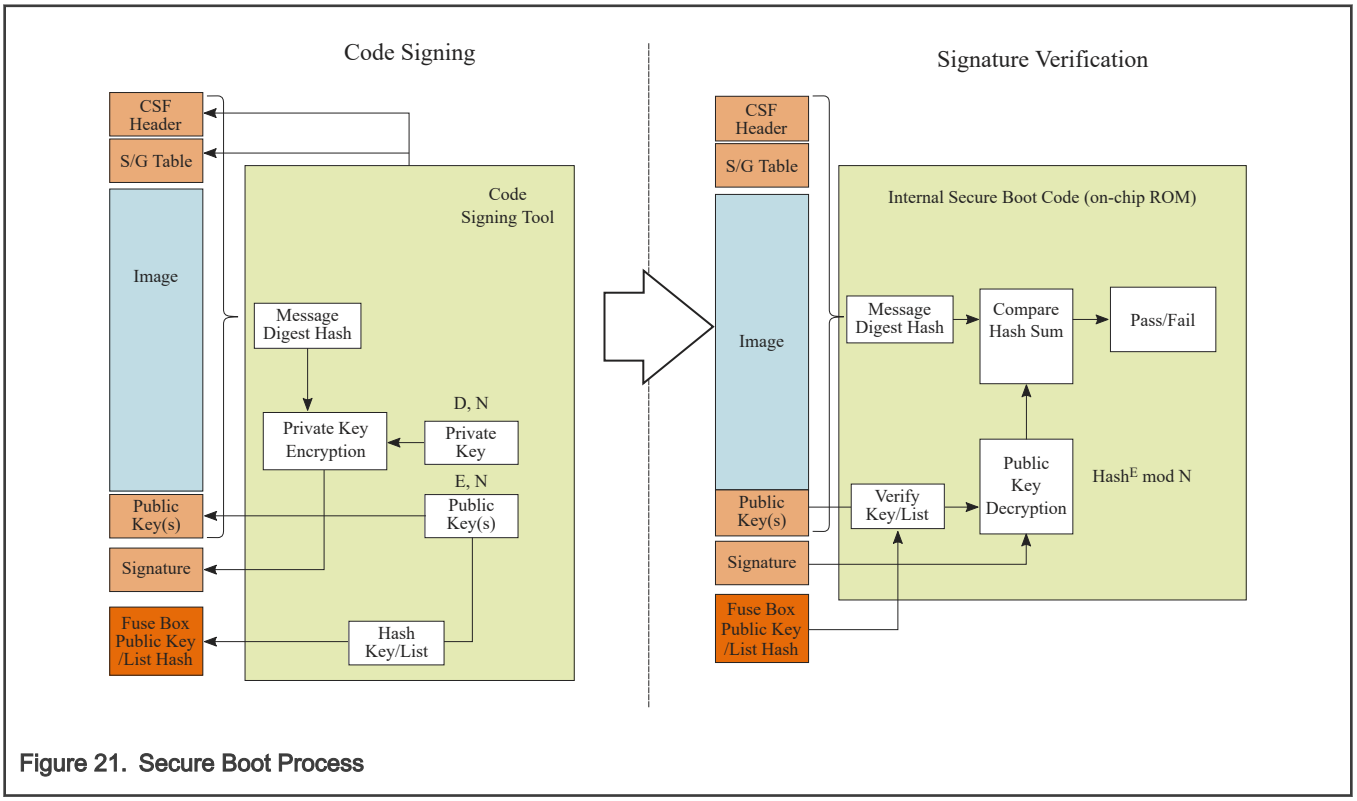

Figure 21. Secure Boot Process

As shown in the left side of the figure, the Code Signing Tool (CST) adds the following:

CSF Header	Command Sequence File Header This header provides the ISBC with flags, pointers, offsets, and lengths necessary to perform image validation.

S/G Table	Scatter Gather Table Optional (N/A for some stages which support only single image) Allows support for multiple non-contiguous images.
Public Key list	SRK (Super Root Key) Table One or more public keys is appended to the image. The CSF header indicates which of the keys is to be used in signature validation.
Signature	The SHA-256 hash of the CSF header + S/G table + Image + Public Key(s), encrypted with a RSA private key corresponding to one of the public keys in the key list.

As part of the code signing process, the Code Signing Tool (CST) also supports:

Generating RSA public and private key pairs	The RSA private key is exported for the user to store securely The CST also supports using public & private keys input by the user
Hashing the public key or public key list	This hash becomes the Super Root Key Hash which is stored in the SFP hash registers.

At higher level, the secure boot process runs Signature Verification in reverse.

1. The ISBC locates the CSF header and S/G table to further locate the image, public key list, and signature
2. The public key (list) is hashed and compared to the SRKH
3. If the public key is good, it is used to decrypt the signature (recover the hash)
4. The CSF header + S/G table + Image + Public key list are hashed, with the result compared to above. If the two hashes match, image is considered to be authentic.

6.1.2.1.1.1 Super Root Key (SRK)

These are RSA public and private key pairs. Private keys are used to sign the boot images and public keys are used to validate these images during ISBC and ESBC phase.

Public keys are embedded in the header and the calculated hash value of SRK table is blown into SRK hash registers of SFP.

These are Hardware Bound Keys, once the hash is fused the public private key pair cannot be modified as the content of SFP registers are non-modifiable.

Keys of sizes 1k, 2k, and 4k are supported in NXP Secure boot Process.

It is the user's responsibility to tightly control access to the RSA private signature key. If this key is ever exposed, attackers will be able to generate alternate images that will pass secure boot.

If this key is lost, the user will be unable to update the images.

Key Revocation	Trust Architecture provides support for revoking the RSA public keys used by the ISBC to verify the ESBC. The RSA public keys used for this purpose are called super root keys (SRK). The SRK table supports maximum of 8 public keys and user has the option to revoke up to 7 keys. During secure boot, the ISBC checks the key number indicated in the CSF header against the revocation fuses in the SFP's OEM Security Policy Register (SFP_OSPR). If the key is revoked, the image validation fails.

6.1.2.2 ISBC Phase

At reset, Service Processor core is released and begins executing instructions from reset vector address 0x0 which is mapped to Internal Boot ROM. The Internal Boot ROM contains the code known as Internal Secure Boot Code (ISBC). The main steps in ISBC flow are defined below.

6.1.2.2.1 ISBC for PBI validation

1. **Sec_Mon check**: Confirms that the Sec_Mon is in the 'Check' state (OTPMK is blown). If not, it writes a 'fail' bit in a Sec_Mon control register, leads to transition into the 'Non-secure' state and failing secure boot.
2. **PBI command check**: Verify that the first PBI command is 'LOAD SEC HDR'. If not found, an error is raised.
3. **Valid header check**: Check for a valid preamble in the header. If not, an error is raised.
4. **CSF parsing and public key check**; If ISBC finds a valid CSF header, it parses the CSF header to locate the public key from SRK (Super Root Key) table to be used to validate the code. There can be a table of maximum 8 public keys present in the header. The Secure Fuse Processor does not store a public key, it stores a SHA-256 hash calculated over SRK table. If the hash of the SRK table fails to match the stored hash, secure boot fails.
5. **Signature validation**: With the validated public key, ISBC decrypts the digital signature stored with the CSF header. The ISBC then uses the PBI length field in the RCW to calculate a hash over all PBI commands (CSF header is also a part of PBI commands) along with the SRK table. Optional flags in the CSF header tell the ISBC whether the FSL Unique ID and the OEM Unique ID (in the Secure Fuse Processor) are to be checked or not. Including these IDs allows the image to be bound to a single platform. If the decrypted hash and generated hash do not match, secure boot fails.
6. **Sec_Mon Transition**: If ISS (Increment Security State) flag is set in the header, transition the SNVS state from 'Check' to 'Trusted'.

NOTE

1. PBI commands in Secure Boot must have a command '**Load Boot 1 CSF Header Ptr**' to inform the ISBC about location of CSF Header for BL1 image (ESBC).
2. BL1 image and header must be placed on an XIP memory before execution of next phase (ISBC validation of BL1/ESBC). If these images are placed on memories like NAND/SD/eMMC, then they must be copied to an XIP memory like OCRAM, DDR via PBI commands.

6.1.2.2.2 ISBC for BL1 (Boot-loader 1) validation

1. **Valid header check**: Check for a valid preamble in the header. If not, an error is raised.
2. **CSF parsing and public key check**; If ISBC finds a valid CSF header, it parses the CSF header to locate the public key from SRK (Super Root Key) table to be used to validate the code. There can be a table of maximum 8 public keys present in the header. The Secure Fuse Processor does not store a public key, it stores a SHA-256 hash calculated over SRK table. If the hash of the SRK table fails to match the stored hash, secure boot fails.
3. **Signature validation**: With the validated public key, ISBC decrypts the digital signature stored with the CSF header. The ISBC then uses the PBI length field in the RCW to calculate a hash over all PBI commands (CSF header is also a part of PBI commands) along with the SRK table. Optional flags in the CSF header tell the ISBC whether the FSL Unique ID and the OEM Unique ID (in the Secure Fuse Processor) are to be checked or not. Including these IDs allows the image to be bound to a single platform. If the decrypted hash and generated hash do not match, secure boot fails.
4. **Entry Point check**: One final check is performed by the ISBC. This check confirms that the Entry Point to be updated in Boot Location Pointer register (Boot LOC PTR reg), falls within one of the SG entries which have been validated by the ISBC.
5. **Sec_Mon Transition**: If ISS (Increment Security State) flag is set in the header, transition the SNVS state from 'Check' to 'Trusted' or Trusted (if transitioned in PB phase) to Secure.

NOTE

1. After End of ISBC, Entry Point parsed from header is written to Boot LOC PTR register.
2. GPP is woken up.
3. SP goes to sleep.

There are many reasons the ISBC could fail to validate the PBI or BL1. Technicians with debug access can check the SCRATCHRW3 register to obtain an error code. For a list of error codes refer ISBC Validation Error Codes.

6.1.2.3 ESBC Phase

Unlike the ISBC, which is in an internal ROM and therefore unchangeable, the ESBC is reference code, and can be changed by OEMs. The remainder of this section is the description of a reasonable secure boot chain of trust based on NXP's reference software for secure boot. The reference ESBC code is also part of the BL1 image validated by ISBC and would be used to validate further ESBC images such as U-Boot. U-Boot further has reference ESBC code to validate further images such as MC, AIOP, and LINUX and so on.

NXP provided ESBC consists of secure firmaware (BL2, BL31) and standard u-boot which has been signed using a private key. If the Boot Mode is secure, user can't reach to uboot prompt as the environment variable **bootdelay** is defined to 0.

There is default boot command for secure boot in the environment which executes on auto boot. This default **bootcmd** validates a file called boot script and on successful validation execute the commands in the boot script.

There are many reasons ESBC could fail to validate Client images or boot script. The error status message along with the code is printed on the u-boot console. For a list of error codes refer ESBC Validation Error Codes.

Users are free to use NXP ESBC as it is provided or to use it as reference to modify their own secure boot system.

To establish the Secure Boot Chain of Trust, some U-Boot Commands have been added in the ESBC Code which will be discussed in detail in coming sections.

6.1.2.3.1 esbc_validate command

```
esbc_validate img_hdr [pub_key_hash]
```

Input arguments:

img_hdr – Location of CSF header of the image to be validated

pub_key_hash – hash of the public key used to verify the image. This is optional parameter. If not provided, code makes the assumption that the key pair used to sign the image is same as that used with ISBC. So the hash of the key in the header is checked against the hash available in SRK fuse for verification.

Description:

The command would do the following:

Perform CSF header validation on the address passed in the image header. During parsing of the header, image address in stored in an environment variable which is later used in source command in default secure boot command.

Signature checks on the image.

6.1.2.3.2 esbc_halt command

```
esbc_halt (no arguments)
```

Description:

This command puts core in spin loop.

6.1.2.3.3 blob enc command

```
blob enc <src location> <dst location> <length> <key_modifier address>
```

Input Arguments:

src location	Address of the image to be encapsulated
dst location	Address where the blob will be created
length	Size of the image to be encapsulated

key_modifier address	Address where a random number 16 bytes long (key modifier) is placed

Description:

This command would create a cryptographic blob of the image placed at src location and place the blob at dst location.

6.1.2.3.4 blob dec command

```
blob dec <src location> <dst location> <length> <key_modifier address>
```

Input Arguments:

src location	Address of the image blob to be decapsulated
dst location	Address where the decapsulated image will be placed
length	Expected Size of the image after decapsulation
key_modifier address	Address where a random number 16 bytes long(key modifier) is placed

Description:

This command would decapsulate the blob placed at src location and place the decapsulated data of expected size at dst location.

6.1.2.3.5 Boot Script

Boot script is a U-Boot script image which contains u-boot commands. ESBC would validate this boot script before executing commands in it.

1. Boot script can have any commands which u-boot supports. No checking is done on the allowed commands in boot script. Since it is validated image, assumption is that commands in boot script would be correct.
2. If some basic scripting error is done in boot script like unknown command, missing arguments, the required usage of that command and core is put in infinite loop.
3. After execution of commands in boot script, if control reaches back in u-boot, error message would be printed on u-boot console and core would be put in spin loop by command esbc_halt.
4. Scatter gather images are not supported with validate command.
5. If ITS fuse is blown, any error in verification of the image would result in system reset. The error would be printed on console before system goes for a reset.

Where to place the boot script?

ESBC u-boot expects the boot script to be loaded in flash . ESBC u-boot code assumes that the public/private key pair used to sign the boot script is same as that was used while signing the u-boot image. If user used different key pair to sign the image, hash of the N and E component of the key pair should be defined in macro:

```
CONFIG_BOOTSCRIPT_KEY_HASH
```

6.1.2.3.5.1 Chain of Trust

Boot script contains information about the next level images, e.g. MC, LINUX etc. ESBC validates these images as per their public keys. MC is started with validated MC images if required and finally bootm command is executed to pass control to LINUX image.

Users are free to use NXP ESBC as it is provided or to use it as reference to modify their own secure boot system. Figure below shows the Chain of Trust established for validation with this ESBC.

Sample Boot Script

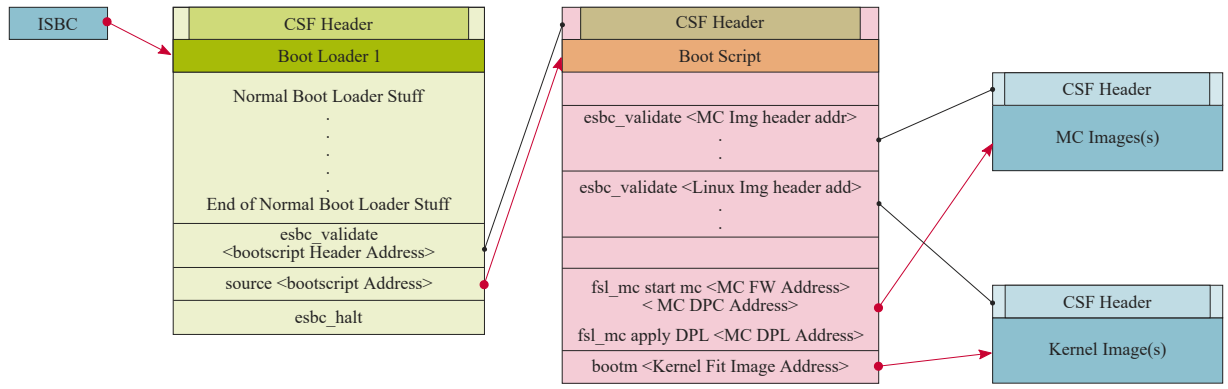

Figure 22. Secure Boot Flow (Chain of Trust)

```
# Get Images and Headers on DDR
.
.
.
# Validate the Images. (<pub_key_hash> is optional)
esbc_validate <Image1 Header Address> <pub_key_hash>
esbc_validate <Image2 Header Address> <pub_key_hash>
.
.
.
# Start MC with validated images
fsl_mc start mc <MC FW Address> < MC DPC Address>
fsl_mc apply DPL <MC DPL Address>

# Boot the Linux
bootm <Kernel Fit Image Address>
```

6.1.2.3.5.2 Chain of Trust with confidentiality

To establish chain of trust with confidentiality, cryptographic blob mechanism can be used. In this chain of trust, validated image is allowed to use the One Time Programmable Master Key to decrypt system secrets. Two bootscripts are to be used. First encap bootscripts is used which creates a blob of the next level images(e.g. MC, LINUX etc.) and saves them on flash. After this the system is booted after replacing the encap bootscript with decap bootscript which decapsulates the blobs and start MC and LINUX.

Sample Encap Boot Script

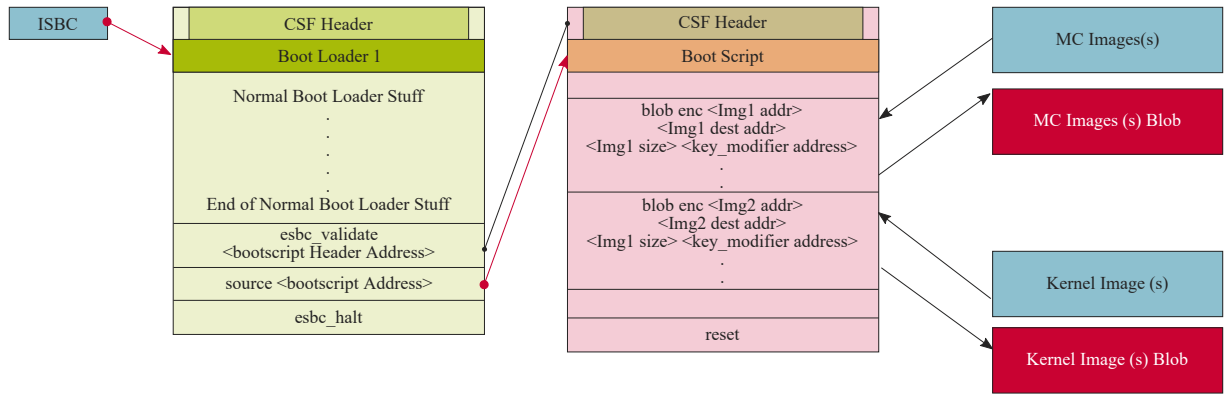

Figure 23. Chain of Trust with Confidentiality (Encapsulation)

```
# Get Images on DDR
.
.
.
# Create the Blobs
blob enc <Img1 addr> <Img1 dest addr> <Img1 size> <key_modifier address>
blob enc <Img2 addr> <Img2 dest addr> <Img2 size> <key_modifier address>
blob enc <Img3 addr> <Img3 dest addr> <Img3 size> <key_modifier address>
.
.
.

Save The Blobs created on Flash
.
.
.

# End of Encap Boot Script (This is one time only and must be replaced with decap Boot Script)
```

Sample Decap Boot Script

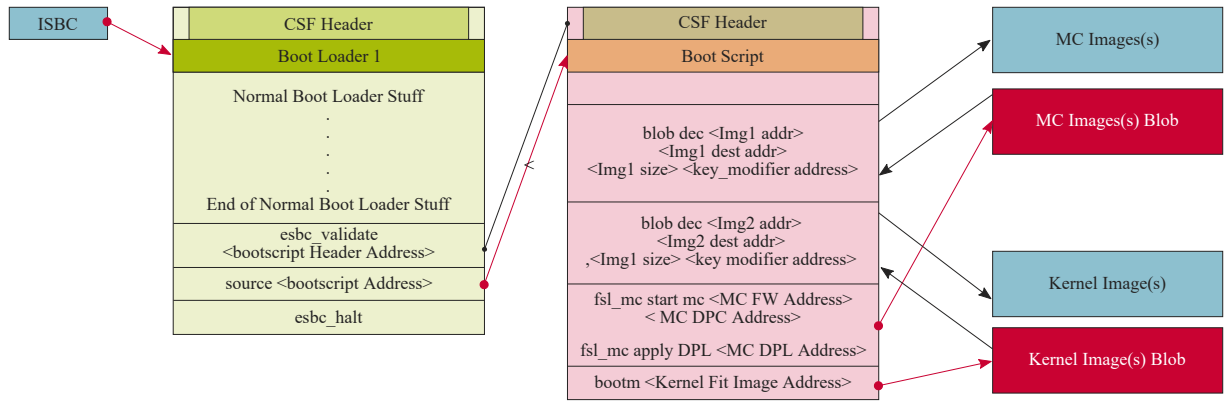

Figure 24. Chain of Trust with Confidentiality (Decapsulation)

```
# Get Images Blobs on DDR
.
.
.
# Decap the Blobs to get the actual images
blob dec <Img1 blob addr> <Img1 dest addr> <expected Img1 size> <key_modifier address>
blob dec <Img2 blob addr> <Img2 dest addr> <expected Img2 size> <key_modifier address>
blob dec <Img3 blob addr> <Img3 dest addr> <expected Img3 size> <key_modifier address>
.
.
.
# Start MC with validated images
fsl_mc start mc <MC FW Address> < MC DPC Address>
fsl_mc apply DPL <MC DPL Address>

# Boot the Linux
bootm <Kernel Fit Image Address>
```

6.1.2.4 Next executable phase

The boot loader (ESBC) finishes the platform initialization and passed control to the Linux image. The boot chain can be further extended to be able to sign application which would be running on Linux prompt. Further RTIC can be integrated to verify memory regions using Security Engine (SEC) during run time.

6.1.2.5 Application Execution

This section presents the minimum steps necessary to demonstrate secure boot into an operating system or application on NXP reference boards.

Steps in the demo would be:

1. ISBC code would validate PBI and Boot Loader 1.
2. On Successful validation, PBI commands would be executed by SP BootROM.
3. Boot Loader 1 (BL2) execution will begin on GPP.
4. The ESBC code in BL2 will authenticate BL31, BL32, BL33 (U-Boot/UEFI). After successful validation BL2 passes control to BL31 which is the resident secure firmware (running in EL3 mode). If BL32 is present, BL31 would load and execute BL32 before passing execution control to BL33.

5. The ESBC code in BL33 would validate and execute bootscript.[3]
6. The boot script would contain the commands to validate and execute next level images as described in Boot Script.

6.1.2.5.1 Introduction

Running secure boot (Chain of Trust

1. Setup the board for secure boot flow. You can choose one of the two flows mentioned below.
   a. **Flow A (Trusted Manufacturing Process)**

      Program the ITS fuse at the same time or after provisioning all other fuses in the SoC. See the Trust Architecture User Guide for details on the suggested Trusted Manufacturing Process.

   b. **Flow B (Prototyping)**

      For protyping phase, do not blow the ITS fuse, secure boot can be enabled by RCW with SB_EN = 1.
2. Blow other required fuses (OTPMK and SRK Hash[4]) in the SFP in silicon. For more details regarding fuse blowing, CCS and Reset Pause, refer to *SoC Specific Reference Manual* and *Trust Architecture User Guide*.

   NOTE

   SRK hash fused into the SoC must be same as the hash of the key pair being used to sign the PBI and U-Boot image.

   For testing purpose, the SRK hash can be written in the mirror registers as described in 6.1.4.

   gen_otpmk_drbg utility in CST can be used to generate otpmk key.
3. Flash all the generated images at locations as described in the address map
   a. **Flow A** - All the images would have to be flashed at the current bank addresses.
   b. If you are using **Flow B**, you can use alternate bank for demo purpose. This would mean flashing the images on alternate bank addresses from Bank0 and then switching to Bank1.

Note:

a. For Flow A and Flow B (If secure boot images flashed on default bank)
   - On power on, ISBC code in SP boot ROM would validate the PBI image followed by validation of BL2 .
   - BL2 would validate BL31, BL32, BL33 image.
   - ESBC code in BL33 image would validates the ESBC images (Boot Script, LINUX, MC, and so on)
   - MC and LINUX would be started.

b. For Flow B (If secure boot images flashed on alternate bank), the user must first set the appropriate board specific switches or CPLD registers for booting from alternate bank and also to enable reset pause.
   - On power on after the correct switch setting, Reset State Machinery will be paused after RCW loading.
   - Write the SRKH to SFP mirror registers and get the system out of Reset Pause via CCS.
   - Secure boot flow as mentioned above executes.

Two additional features are provided in secure boot:

1. Chain of Trust with confidentiality

[3] In case the boot loader is split into two parts, the validation and execution of boot script would happen in the final boot loader i.e Boot Loader2. Boot Loader 1 will validate and transfer control to Boot Loader 2.

[4] Blowing of OTPMK is essential to run secure boot for both Production (Flow A) and Prototyping/ Development (Flow B).

For SRK Hash,in Development Mode (Flow B), there is a workaround to avoid blowing fuses. The SoC can be put in a **Reset Pause** state. This will pause the Reset State Machinery after RCW Loading. Then CCS can be connected via JTAG.

Write the SRK Hash value in SFP mirror registers and then get the system out of Reset Pause State.

2. ISBC Key Extension

6.1.2.5.2 Chain of Trust with confidentiality

This section presents the steps to be followed in order to execute chain of trust with confidentiality.

The demo would be divided into two parts:

1. Creating /encrypting images in form of blobs.
2. Decrypting the images using OTPMK, and booting from decrypted images.

The execution steps remain same as specified above in Application Execution. In first phase the Boot Script would contain the commands to encrypt and create blobs of the images. After that the Boot Script is replaced and in second phase the Boot Script would contain commands to decrypt the blobs to get back the images and boot Linux, AIOP using these images.

6.1.2.5.2.1 Other images required for demo

Apart from SDK images described above, the following images are also required:

1. Encap boot script

   Sample Encap boot script

```
load \$devtype \$devnum:2 \$kernelheader_addr_r /secboot_hdrs/ls2088ardb/hdr_linux.out;
esbc_validate \$kernelheader_addr_r;
load \$devtype \$devnum:2 \$fdtheader_addr_r /secboot_hdrs/ls2088ardb/hdr_dtb.out; esbc_validate
\$fdtheader_addr_r;
size \$devtype \$devnum:2 /vmlinuz; echo Encapsulating linux image;setenv key_addr 0x87000000;
mw \$key_addr $key_id_1;
setexpr \$key_addr \$key_addr + 0x4; mw \$key_addr $key_id_2;setexpr \$key_addr \$key_addr +
0x4; mw \$key_addr $key_id_3;setexpr \$key_addr \$key_addr + 0x4; mw \$key_addr $key_id_4;
blob enc \$kernel_addr_r \$load_addr \$filesize \$key_addr; setexpr blobsize \$filesize +
0x30;echo Saving encrypted linux ;save \$devtype \$devnum:2 \$load_addr /vmlinuz \$blobsize;size
\$devtype \$devnum:2 /fsl-ls1046a-rdb-sdk.dtb;
echo Encapsulating dtb image; blob enc \$fdt_addr_r \$load_addr \$filesize \$key_addr; setexpr
blobsize \$filesize + 0x30;echo Saving encrypted dtb; save \$devtype \$devnum:2 \$load_addr /fsl-
ls1046a-rdb-sdk.dtb \$blobsize; size \$devtype \$devnum:2 /ls1046ardb_dec_boot.scr;
load \$devtype \$devnum:2 \$load_addr /ls2088ardb_dec_boot.scr;
echo replacing Bootscript; save \$devtype \$devnum:2 \$load_addr /ls2088ardb_boot.scr \
$filesize;size \$devtype \$devnum:2 /secboot_hdrs/ls2088ardb/hdr_ls2088ardb_bs_dec.out;
load \$devtype \$devnum:2 \$load_addr /secboot_hdrs/ls2088ardb/hdr_ls2088ardb_bs_dec.out ;echo
Replacing bootscript header; save \$devtype \$devnum:2 \$load_addr /hdr_ls2088ardb_bs.out
\$filesize;reset;'
```

2. Decap boot script

```
size \$devtype \$devnum:2 /vmlinuz;setexpr imgsize \$filesize - 0x30 ;
echo Decapsulating linux image; setenv key_addr 0x87000000; mw \$key_addr $key_id_1;setexpr \
$key_addr \$key_addr + 0x4; mw \$key_addr $key_id_2;setexpr \$key_addr \$key_addr + 0x4; mw \
$key_addr key_id_3;setexpr \$key_addr \$key_addr + 0x4; mw \$key_addr $key_id_4;
 blob dec \$kernel_addr_r \$load_addr \$imgsize \$key_addr; cp.b \$load_addr \$kernel_addr_r \
$filesize ;size \$devtype \$devnum:2 /fsl-ls2088a-rdb.dtb;setexpr imgsize \$filesize - 0x30 ;
echo Decapsulating dtb image; blob dec \$fdt_addr_r \$load_addr \$imgsize \$key_addr; cp.b \
$load_addr \$fdt_addr_r \$filesize ;
```

6.1.2.5.2.2 Running secure boot (Chain of Trust with confidentiality)

1. Setup the board for secure boot flow. You can choose any of the flows mentioned below.
   a. **Flow A (Trusted Manufacturing Process)**

Program the ITS fuse at the same time or after provisioning all other fuses in the SoC. See the Trust Architecture User Guide for details on the suggested Trusted Manufacturing Process.

b. **Flow B (Prototyping)**

For protyping phase, do not blow the ITS fuse, secure boot can be enabled by RCW with SB_EN = 1.

2. Blow other required fuses(OTPMK and SRK hash[5]) in the SFP in silicon. For more details regarding fuse blowing, CCS and Reset Pause, refer to Platform Reference Manual and Trust Architecture User Guide.

NOTE

*SRK hash in the fuse should be same as the hash of the key pair being used to sign the PBI and U-Boot image.

*For testing purpose, the SRK hash can be written in the mirror registers.

*gen_otpmk_drbg utility in CST can be used to generate otpmk key.

3. Flash all the generated images at locations as described in the address map.
   a. **Flow A** - All the images would have to be flashed at the current bank addresses.
   b. If you are using **Flow B**, you can use alternate bank for demo purpose. This would mean flashing the images on alternate bank addresses from Bank0 and then switching to Bank4.
4. Give a power on cycle to the board.
   a. For Flow A and Flow B (If Secure Boot images flashed on default bank)
      - On power on, ISBC code in SP Boot ROM would validate the PBI image followed by validation of Boot Loader1 (U-Boot)
      - First Boot: Encapsulaton Step (Should happen in OEM's premises)
        i. By defult the enacap and decap bootscripts will be installed in the bootpartition.
        ii. When the board boots up for the first time after all images have been generated, Encap bootscript will execute. This bootscript:
            i. Authenticates and encapsulates linux and dtb images and replaces the unencrypted linux and dtb images with newly encapsulated linux and dtb.
            ii. Replaces the encap bootscript and header with the decap bootscript and it's header, already present in the bootpartition.
            iii. Issues reset

[5] Blowing of OTPMK is essential to run secure boot for both Production (Flow A) and Prototyping/ Development (Flow B).

For SRK Hash, in Development Mode (Flow B), there is a workaround to avoid blowing fuses. The SoC can be put in a **Reset Pause** state. This will pause the Reset State Machinery after RCW Loading. Then CCS can be connected via JTAG.

Write the SRK Hash value in SFP mirror registers and then get the system out of Reset Pause State.

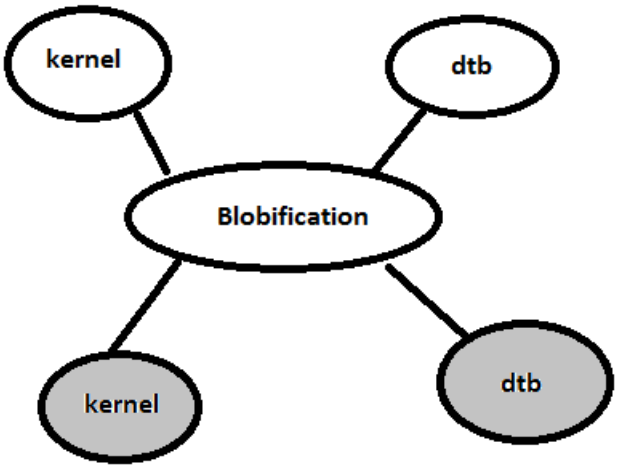

- Subsequent Boot .
    i. Uboot would execute script with decap commands
        i. Un-blobify linux and dtb image in DDR
        ii. Pass control to these images

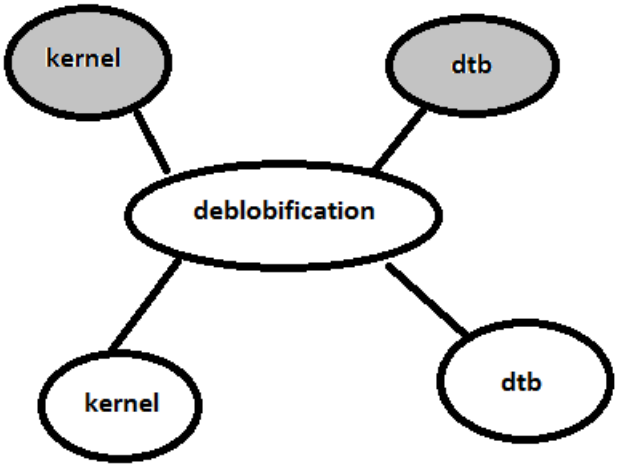

b. For Flow B (If Secure Boot images flashed on alternate bank), the user must first do the switch settings[6] for booting from alternate bank and also to enable Reset Pause.
    - On power on after the correct switch setting, Reset State Machinery will be paused after RCW loading.
    - Write the SRKH to SFP mirror registers and get the system out of reset pause via CCS.
    - Secure Boot flow as mentioned above would execute.

[6] This may also be done via writing to FPGA registers from the U-Boot Prompt of U-Boot runing in Non-Secure Mode on Bank0. Please refer the Platform FPGA guide for the same.

6.1.2.6 PBI structure

The following table shows an overview of the recommended PBI format as generated by LSDK.

	Fields	Offset	Size (In 32-bit word)
RCW	Preamble (RCW)	0x00	1
	Load RCW command	0x04	1
	RCW words	0x08 – 0x87	32
	RCW checksum	0x88	1
PBI commands	Load security header CSF header	0x8c 0x90 – 0xdf	1 20
	Load boot 1CSF header Boot 1 pointer	0xe0 0xe4	1 1
	Other PBI commands	0xe8	N
	STOP command (With/ Without CRC)	0xe8 + (4*N)	2
SRK table	SRK table	0x90 + SRK table offset in CSF header	(No. of keys * Key length)
RSA signature	Signature	0x90 + Sign offset in CSF header	Sign length

RCW

Preamble The preamble is always the first element in a PBI image. It contains a standard pattern that identifies the memory location as the beginning of a valid PBI image. The preamble is a 4-byte pattern defined as “0xaa55aa55”.

Load RCW command The next word is load RCW command. This command loads the 1024-bit Reset Configuration Word (RCW) from the interface specified by Power-on-Reset (POR) configuration strapping pins. It has the following two formats.

1. Load RCW with checksum (0x10): Read Reset Configuration Word performs simple 32-bit checksum, and update RCW registers.
2. Load RCW without checksum (0x11): Read RCW and update RCW registers without performing checksum. The version without the checksum includes padding with zeroes in the place of the checksum value.

RCW words 1024 RCW bits that is 32 words of 32 bits.

RCW checksum It is calculated as a 32-bit unsigned integer summation of the RCW Preamble, the Load RCW with checksum command, and each of the 32 words (32-bit) of the RCW. A simple 32-bit checksum is used for the validation of the command.

```
checksum(RCW_WORD[]){
    unsigned_32 sum = 0xAA55AA55 + 0x80100000 + Load RCW Command;
    for(i=0; i<32; i++)
        sum+=RCW_WORD[i];
```

```
    return (sum);
}
```

NOTE

Checksum will have to be updated by CST tool as the fields like SB_EN, PBI_LEN in the RCW words are changed.

PBI commands	**Load security header**	This command loads information required for authentication of the PBI image. The security header includes pointers to an SRK key table and RSA signatures as well as other flags and IDs. The CSF Header is part of the command. Please refer the CSF header structure in .
	Load boot 1 CSF header	This command loads a pointer to a CSF Header used for authentication of the Boot 1 Secondary Program Loader. This 32-bit value used by the Boot 0 ISBC and is required for secure boot.
	Other PBI commands	Other PBI commands input by user.
	STOP command	This command ends the PBI sequence and has two variants (with and without CRC). The CRC check value covers all commands from the first command after the RCW up to and including this CRC and Stop command, regardless of whether any are skipped by Jump commands during execution. In Stop command without CRC, it ends the PBI sequence immediately. It does not include a CRC value, but it instead has a 32-bit padding with zeroes so that it is the same size as the Stop with CRC command.

NOTE

CST tool updates the PBI commands by adding Load Security Header command and Load Boot 1 Security Header command. So, CRC must also be updated.

SRK table	Table of public keys is used in secure boot validation. It is kept at an offset from the CSF header. The offset is specified in the CSF header.
RSA signature	RSA signature is calculated over all PBI commands and SRK table. It is kept at an offset from the CSF header. The offset is specified in the CSF header.

6.1.2.7 CSF header structure definition

Table 44. Trust architecture and SFP information

SoC	Trust Arch. version	SFP version	POVDD	DRVR		OTPMK	
				Algo (CST)	Register to check Hamming Error	Algo (CST)	Register to check Hamming Error
LS1088A	3.1	3.5	1.89 V	A2	SFP Secret Value Hamming Error Status Register (SFP_SVHESR)	2	SFP secret Value Hamming Error Status Register (SFP_SVHESR)
LS2088A (LS2 Rev2)	3.1	3.5	1.89 V	A2		2	

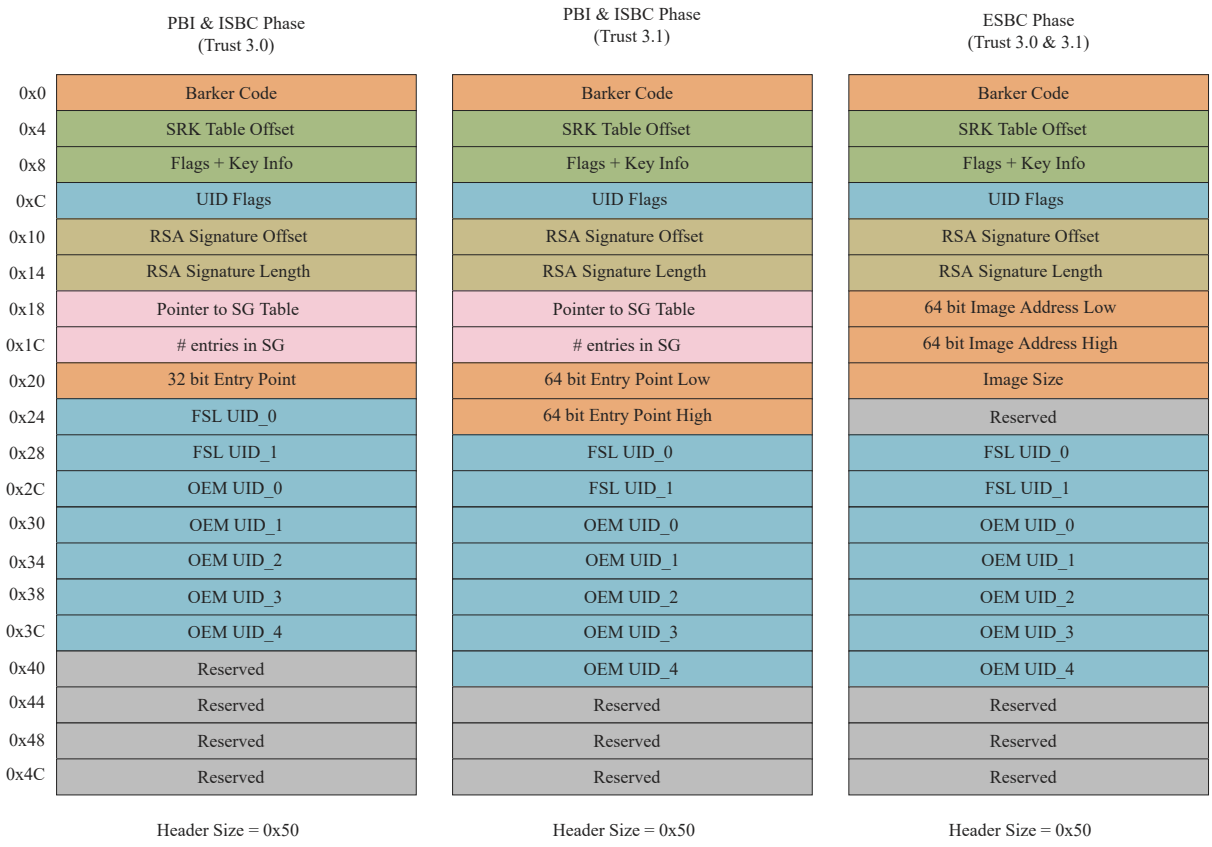

Figure 25. CSF header structure

Table 45. CSF header structure (ISBC trust 3.0)

Offset		Description
0x00		**Barker Code** Fixed value which the ISBC uses to confirm it has located the start of a CSF header. (12_19_20_01) 0x00 – 0x12 0x01 – 0x19 0x02 – 0x20 0x03 – 0x01 It is numeric encoding of LSTA (LS Series Trust Architecture)
0x04		**SRK table offset** This location contains an address which is the offset of the SRK table from the start of CSF header. Using this offset and the number of entries in SRK table, the SRK table is read. * Description of fields in SRK table is mentioned below.
0x08	0x08	**No. of keys** This field specifies the no. of keys in the SRK table

Table continues on the next page...

Table 45. CSF header structure (ISBC trust 3.0) (continued)

Offset		Description
	0x09	**Key No. for verification** Key # to use for verification; the key in the table which the ISBC uses to attempt signature verification
	0x0a	Field Reserved
	0x0b	**IE :** Reserved **MP :** Execute Manufacturing Protection Routine **ISS :** Increment Security State; indicates whether the ISBC should increment the SNVS SSM upon successful verification **B01 :** Identifies whether this is the CSF header of a boot 0 image (PBI) or a boot 1 image (SPL) **LW :** Leave writable; when set; ISBC does not set the SFP Write Disable
0x0C	0x0C	Reserved
	0x0D	Reserved
	0x0E	Reserved
	0x0F	**OIDx**: when set, the corresponding OEM UID field in the SFP is included in the digital signature verification. For each bit set, the corresponding OUID field is included in the CSF header. **FUID** : when set, the 64b FUID is included in the digital signature verification and the FUID is included in the CSF header Other bits are reserved.
0x10		**RSA signature offset** This location contains an address which is the offset of the RSA signature from the start of CSF header. Using this offset and the signature length, the RSA signature is read. The RSA signature is calculated over CSF header, Scatter Gather table, and ESBC images.
0x14		**RSA signature length** This location contains the length of the RSA signature in bytes.
0x18		**SG table offset** This location contains an address which is the offset of the SG table from the start of CSF header. Using this offset and the number of entries in SG Table, the SG table is read. * Description of fields in SG table is mentioned below.
0x1C		**No. of entries** This field specifies the number of entries present in SG table.
0x20		**Entry point (32 bit)** ISBC transfers control to this location upon successful validation of ESBC image(s).
0x24		FSL UID 0
0x28		FSL UID 1

Table continues on the next page...

Table 45. CSF header structure (ISBC trust 3.0) (continued)

Offset	Description
0x2c	OEM UID 0
0x30	OEM UID 1
0x34	OEM UID 2
0x38	OEM UID 3
0x3c	OEM UID 4
0x40	Reserved
0x44	Reserved
0x48	Reserved
0x4C	Reserved

Table 46. CSF header structure (ISBC trust 3.1)

Offset		Description
0x00		**Barker Code** Fixed value which the ISBC uses to confirm it has located the start of a CSF header. (12_19_20_01) 0x00 – 0x12 0x01 – 0x19 0x02 – 0x20 0x03 – 0x01 It is numeric encoding of LSTA (LS Series Trust Architecture)
0x04		**SRK table offset** This location contains an address which is the offset of the SRK table from the start of CSF header. Using this offset and the number of entries in SRK table, the SRK table is read.
0x08	0x08	**No. of keys** This field specifies the no. of keys in the SRK table
	0x09	**Key No. for verification** Key # to use for verification; the key in the table which the ISBC uses to attempt signature verification
	0x0a	Field Reserved
	0x0b	**IE :** ISBC Extension (Reserved) **MP :** Execute Manufacturing Protection Routine **ISS :** Increment Security State; indicates whether the ISBC should increment the SNVS SSM upon successful verification **B01 :** identifies whether this is the CSF header of a boot 0 image (PBI) or a boot 1 image (SPL) **LW :** Leave writable; when set; ISBC does not set the SFP Write Disable

Table continues on the next page...

Table 46. CSF header structure (ISBC trust 3.1) (continued)

0x0C	0x0C	Reserved
	0x0D	Reserved
	0x0E	Reserved
	0x0F	**OIDx**: when set, the corresponding OEM UID field in the SFP is included in the digital signature verification. For each bit set, the corresponding OUID field is included in the CSF header. **FUID** : when set, the 64b FUID is included in the digital signature verification and the FUID is included in the CSF header Other bits are reserved.
0x10		**RSA signature offset** This location contains an address which is the offset of the RSA signature from the start of CSF header. Using this offset and the signature length, the RSA signature is read. The RSA signature is calculated over CSF header, Scatter Gather table, and ESBC images.
0x14		**RSA signature length** This location contains the length of the RSA signature in bytes.
0x18		**SG table offset** This location contains an address which is the offset of the SG table from the start of CSF header. Using this offset and the number of entries in SG table, the SG table is read.
0x1C		**No. of entries** This field specifies the number of entries present in SG table.
0x20		**Entry point (64 bit)** ISBC transfers control to this location upon successful validation of ESBC image(s).
0x28		FSL UID 0
0x2c		FSL UID 1
0x30		OEM UID 0
0x34		OEM UID 1
0x38		OEM UID 2
0x3c		OEM UID 3
0x40		OEM UID 4
0x44		Reserved
0x48		Reserved
0x4C		Reserved

Table 47. CSF header structure (ESBC trust 3.0 and trust 3.1)

Offset	Description

Table continues on the next page...

Table 47. CSF header structure (ESBC trust 3.0 and trust 3.1) (continued)

0x00		**Barker Code** Fixed value which the ISBC uses to confirm it has located the start of a CSF header. (12_19_20_01) 0x00 – 0x12 0x01 – 0x19 0x02 – 0x20 0x03 – 0x01 It is numeric encoding of LSTA (LS Series Trust Architecture)
0x04		**SRK table offset** This location contains an address which is the offset of the SRK table from the start of CSF header. Using this offset and the number of entries in SRK Table, the SRK table is read.
0x08	0x08	**No. of keys** This field specifies the no. of keys in the SRK table
	0x09	**Key No. for verification** Key # to use for verification; the key in the table which the ISBC uses to attempt signature verification
	0x0a	Field Reserved
	0x0b	**IE :** ISBC Extension Flag
0x0C	0x0C	Reserved
	0x0D	Reserved
	0x0E	Reserved
	0x0F	**OIDx**: when set, the corresponding OEM UID field in the SFP is included in the digital signature verification. For each bit set, the corresponding OUID field is included in the CSF header. **FUID** : when set, the 64b FUID is included in the digital signature verification and the FUID is included in the CSF header Other bits are reserved.
0x10		**RSA signature offset** This location contains an address which is the offset of the RSA signature from the start of CSF header. Using this offset and the signature length, the RSA signature is read. The RSA signature is calculated over CSF header, Scatter Gather table and ESBC images.
0x14		**RSA signature length** This location contains the length of the RSA signature in bytes.
0x18		**Image address (64 bit)**
0x20		**Image size**
0x24		IE Key Select
0x28		FSL UID 0

Table continues on the next page...

Table 47. CSF header structure (ESBC trust 3.0 and trust 3.1) (continued)

0x2c	FSL UID 1
0x30	OEM UID 0
0x34	OEM UID 1
0x38	OEM UID 2
0x3c	OEM UID 3
0x40	OEM UID 4
0x44	Reserved
0x48	Reserved
0x4c	Reserved

Table 48. SRK table structure

Offset	Description
0x00	SRK 0 Length (Length of Modulus or Exponent; Modulus length always equals Exponent length)
0x04	SRK 0 Value (Modulus)
0x04 + K	SRK 0 Value (Exponent)
0x04 + 2K	SRK 0 (Padding; 8Kb - (Exponent+Modulus))
0x04 *1 + (10 * 1)K	SRK 1 Length (Length of Modulus or Exponent; Modulus length always equals Exponent length)
0x04 * 2 + (10 *1) K	SRK 1 Value (Modulus)
0x04 * 2+ (10 * 1) + 1k	SRK 1 Value (Exponent)
0x04 * 2 + (10 * 1) + 2K	SRK 1 (Padding; 8Kb - (Exponent+Modulus))
0x04 * (N-1) + (10 *(N-1))K	SRK N Length (Length of Modulus or Exponent; Modulus length always equals Exponent length)
0x04 * N + (10 *(N-1))K	SRK N Value (Modulus)
0x04 * N + (10 *(N-1)) + 1K	SRK N Value (Exponent)
0x04 * N + (10 *(N-1)) + 2K	SRK N (Padding; 8Kb - (Exponent+Modulus))

Table 49. SG Table Structure

Offset	Description
0x00	Length
0x04	Reserved
0x08	SRC Address Low
0x0C	SRC Address High

6.1.2.8 CSF header structure definition

Table 50. Trust architecture and SFP information

SoC	Trust Arch. version	SFP version	POVDD	DRVR		OTPMK	
				Algo (CST)	Register to check Hamming Error	Algo (CST)	Register to check Hamming Error
LS2080A (LS2 Rev1)	3.0	3.4	1.89 V	A2	SFP Secret Value Hamming Error Status Register (SFP_SVHESR)	2	SFP Secret Value Hamming Error Status Register (SFP_SVHESR)
LS1088A	3.1	3.5	1.89 V	A2		2	
LS2088A (LS2 Rev2)	3.1	3.5	1.89 V	A2		2	

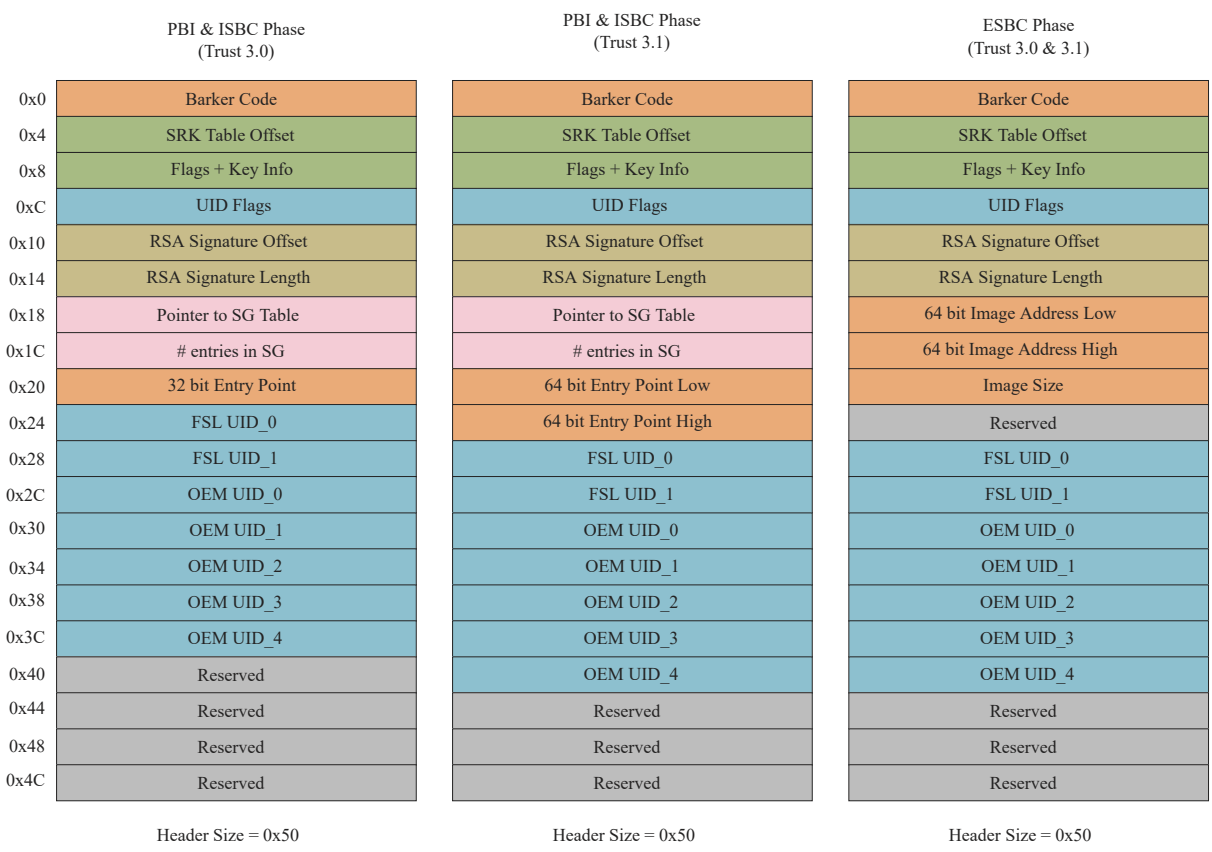

Figure 26. CSF header structure

Table 51. CSF header structure (ISBC trust 3.0)

Offset	Description
0x00	**Barker code**

Table continues on the next page...

Table 51. CSF header structure (ISBC trust 3.0) (continued)

Offset		Description
		Fixed value which the ISBC uses to confirm it has located the start of a CSF header. (12_19_20_01) 0x00 – 0x12 0x01 – 0x19 0x02 – 0x20 0x03 – 0x01 It is numeric encoding of LSTA (LS Series Trust Architecture)
0x04		**SRK table offset** This location contains an address which is the offset of the SRK table from the start of CSF header. Using this offset and the number of entries is SRK table, the SRK table is read.
0x08	0x08	**No. of keys** This field specifies the no. of keys in the SRK table
	0x09	**Key No. for verification** Key # to use for verification; the key in the table which the ISBC uses to attempt signature verification
	0x0a	Field Reserved
	0x0b	**IE :** Reserved **MP :** Execute Manufacturing Protection Routine **ISS :** Increment Security State; indicates whether the ISBC should increment the SNVS SSM upon successful verification **B01 :** Identifies whether this is the CSF header of a boot 0 image (PBI) or a boot 1 image (SPL) **LW :** Leave Writeable; when set, ISBC does not set the SFP Write Disable
0x0C	0x0C	Reserved
	0x0D	Reserved
	0x0E	Reserved
	0x0F	**OIDx**: when set, the corresponding OEM UID field in the SFP is included in the digital signature verification. For each bit set, the corresponding OUID field is included in the CSF header. **FUID** : when set, the 64b FUID is included in the digital signature verification and the FUID is included in the CSF header Other bits are reserved.
0x10		**RSA signature offset** This location contains an address which is the offset of the RSA signature from the start of CSF header. Using this offset and the signature length, the RSA signature is read. The RSA signature is calculated over CSF Header, Scatter Gather table and ESBC images.
0x14		**RSA signature length**

Table continues on the next page...

Table 51. CSF header structure (ISBC trust 3.0) (continued)

Offset	Description
	This location contains the length of the RSA signature in bytes.
0x18	**SG table offset** This location contains an address which is the offset of the SG table from the start of CSF header. Using this offset and the number of entries is SG Table, the SG table is read.
0x1C	**No. of entries** This field specifies the number of entries present in SG table.
0x20	**Entry point (32 bit)** ISBC transfers control to this location upon successful validation of ESBC image(s).
0x24	FSL UID 0
0x28	FSL UID 1
0x2c	OEM UID 0
0x30	OEM UID 1
0x34	OEM UID 2
0x38	OEM UID 3
0x3c	OEM UID 4
0x40	Reserved
0x44	Reserved
0x48	Reserved
0x4C	Reserved

Table 52. CSF header structure (ISBC trust 3.1)

Offset	Description
0x00	**Barker Code** Fixed value which the ISBC uses to confirm it has located the start of a CSF header. (12_19_20_01) 0x00 – 0x12 0x01 – 0x19 0x02 – 0x20 0x03 – 0x01 It is numeric encoding of LSTA (LS Series Trust Architecture)
0x04	**SRK table offset** This location contains an address which is the offset of the SRK table from the start of CSF header. Using this offset and the number of entries is SRK Table, the SRK table is read.

Table continues on the next page...

Table 52. CSF header structure (ISBC trust 3.1) (continued)

0x08	0x08	**No. of keys** This field specifies the no. of keys in the SRK Table
	0x09	**Key No. for verification** Key # to use for verification; the key in the table which the ISBC uses to attempt signature verification
	0x0a	Field Reserved
	0x0b	**IE :** ISBC Extension (Reserved) **MP :** Execute Manufacturing Protection Routine **ISS :** Increment Security State; indicates whether the ISBC should increment the SNVS SSM upon successful verification **B01 :** identifies whether this is the CSF header of a boot 0 image (PBI) or a boot 1 image (SPL) **LW :** Leave Writeable; when set, ISBC does not set the SFP Write Disable
0x0C	0x0C	Reserved
	0x0D	Reserved
	0x0E	Reserved
	0x0F	**OIDx**: when set, the corresponding OEM UID field in the SFP is included in the digital signature verification. For each bit set, the corresponding OUID field is included in the CSF header. **FUID** : when set, the 64b FUID is included in the digital signature verification and the FUID is included in the CSF header Other bits are reserved.
0x10		**RSA signature offset** This location contains an address which is the offset of the RSA signature from the start of CSF header. Using this offset and the signature length, the RSA signature is read. The RSA signature is calculated over CSF header, Scatter Gather table and ESBC images.
0x14		**RSA signature length** This location contains the length of the RSA signature in bytes.
0x18		**SG table offset** This location contains an address which is the offset of the SG table from the start of CSF header. Using this offset and the number of entries in SG Table, the SG table is read.
0x1C		**No. of entries** This field specifies the number of entries present in SG table.
0x20		**Entry point (64 bit)** ISBC transfers control to this location upon successful validation of ESBC image(s).
0x28		FSL UID 0
0x2c		FSL UID 1

Table continues on the next page...

Table 52. CSF header structure (ISBC trust 3.1) (continued)

0x30	OEM UID 0
0x34	OEM UID 1
0x38	OEM UID 2
0x3c	OEM UID 3
0x40	OEM UID 4
0x44	Reserved
0x48	Reserved
0x4C	Reserved

Table 53. CSF header structure (ESBC trust 3.0 and trust 3.1)

Offset		Description
0x00		**Barker code** Fixed value which the ISBC uses to confirm it has located the start of a CSF header. (12_19_20_01) 0x00 – 0x12 0x01 – 0x19 0x02 – 0x20 0x03 – 0x01 It is numeric encoding of LSTA (LS Series Trust Architecture)
0x04		**SRK table offset** This location contains an address which is the offset of the SRK table from the start of CSF header. Using this offset and the number of entries in SRK table, the SRK table is read.
0x08	0x08	**No. of keys** This field specifies the no. of keys in the SRK table
	0x09	**Key No. for verification** Key # to use for verification; the key in the table which the ISBC uses to attempt signature verification
	0x0a	Field Reserved
	0x0b	**IE :** ISBC Extension Flag
0x0C	0x0C	Reserved
	0x0D	Reserved
	0x0E	Reserved
	0x0F	**OIDx**: when set, the corresponding OEM UID field in the SFP is included in the digital signature verification. For each bit set, the corresponding OUID field is included in the CSF header. **FUID** : when set, the 64b FUID is included in the digital signature verification and the FUID is included in the CSF header

Table continues on the next page...

Table 53. CSF header structure (ESBC trust 3.0 and trust 3.1) (continued)

		Other bits are reserved.
0x10		**RSA signature offset** This location contains an address which is the offset of the RSA signature from the start of CSF header. Using this offset and the signature length, the RSA signature is read. The RSA signature is calculated over CSF header, Scatter Gather table and ESBC images.
0x14		**RSA signature length** This location contains the length of the RSA signature in bytes.
0x18		**Image address (64 bit)**
0x20		**Image size**
0x24		IE Key Select
0x28		FSL UID 0
0x2c		FSL UID 1
0x30		OEM UID 0
0x34		OEM UID 1
0x38		OEM UID 2
0x3c		OEM UID 3
0x40		OEM UID 4
0x44		Reserved
0x48		Reserved
0x4c		Reserved

6.1.2.9 Secure boot specific RCW fields

This section describes the various fields in RCW which are relevant to the ISBC code executed in the SP BootROM.

SB_EN Secure Boot enable

Bit(s): 266

- 0 Secure Boot is not enabled[7]
- 1 Secure Boot is enabled

PBI_LENGTH Pre-Boot Initialization Length

Bit(s): 287-276

Size in words of the PBI commands.

SDBGEN Secure Debug Enable

Bit(s): 288

Secure Debug (CoreSight SPIDEN) is enabled after RCW is loaded if this RCW bit is set and the ‘Intent to Secure’ fuse value is cleared.

[7] Secure Boot is enabled if either this RCW bit is set or the Intent to Secure fuse value is set.

- 0 Secure debug is not enabled
- if ITS = 1 and SDBGEN = 1 -> in secure debug

GPIO_LED_EN GPIO LED Enable

Bit(s): 311

If the OEM chooses to implement a LED to indicate secure boot failure, the LED will be connected to a GPIO. The SP BootROM code sequence turns on the LED (if RCW[GPIO_LED_EN] = 1) by configuring one GPIO direction (GPDIR) register bit as an output and writing the corresponding output in a GPIO block data (GPDAT) register.

GPIO_LED_NUM GPIO Number for LED

Bit(s): 310-304

If GPIO_LED_EN is set, these bits specify the GPIO number to which LED is connected.

- 0x1f - 0x00 : GPIO_1
- 0x3f - 0x20 : GPIO_2
- 0x5f - 0x40 : GPIO_3
- 0x7f - 0x60 : GPIO_4

NOTE

The GPIO output assigned to the LED is driven high to whatever VDD voltage is supplied by the integrated device for the chosen GPIO output.Since GPIO pins at the time of SoC reset are initially configured as inputs, and since there will be some indeterminate period of time from the assertion of SoC reset to when the GPIO pin is configured by SP Boot ROM as an output, the GPIO pin chosen must be terminated with a weak pull down to ground.

6.1.2.10 ISBC error codes

Error handling in production environment (ITS = 1)

- Error code would be logged in DCFG SCRATCH register.
- SNVS would be transitioned to **soft fail** state.
- Activate the LED. If the user chooses to implement a LED to indicate secure boot failure, the LED will be connected to a GPIO. The information of GPIO is specified via bits in RCW.

  GPIO_LED_EN Bit(s): 311

  The SP BootROM code sequence turns on the LED (if RCW[GPIO_LED_EN] = 1) by configuring one GPIO direction (GPDIR) register bit as an output and writing the corresponding output in a GPIO block data (GPDAT) register.

  GPIO_LED_NUM Bit(s): 310-304

  If GPIO_LED_EN is set, these bits specify the GPIO number to which LED is connected.

  - 0x1f - 0x00 : GPIO_1
  - 0x3f - 0x20 : GPIO_2
  - 0x5f - 0x40 : GPIO_3
  - 0x7f - 0x60 : GPIO_4

- Soft reset is issued
- Cores then enters in infinite loop (If Reset is disabled)[8]

Error handling in development environment (ITS = 0, SB_EN = 1)

- Error code would be logged in DCFG SCRATCH register.
- SNVS would be transitioned to **non-secure** state.
- Further actions depends on the type of failure

Fatal Errors	Core in infinite Loop
Non-Fatal Error	Application software is allowed to execute

Error codes

The Error codes reported by SP BootROM can be categorized in following sections.

1. Core exceptions
2. Device errors
3. RCW/PBI errors
4. Validation errors

Table 54. ISBC error codes

When error generated	Error code	Value	Description
Core exceptions			
Random	ERROR_UNDEFINED_INSTRUCTION	0x1	Occurs if neither the processor nor any attached co-processor recognizes the currently executing instruction.
Random	ERROR_SWI	0x2	Software Interrupt is a user-defined interrupt instruction. It allows a program running in User mode, for example, to request privileged operations that run in Supervisor mode.
Random	ERROR_PREFETCH_ABORT	0x3	Occurs when the processor attempts to execute an instruction that has been prefetched from an illegal address.
Random	ERROR_DATA_ABORT	0x4	Occurs when a data transfer instruction attempts to load or store data at an illegal address.
Random	ERROR_IRQ	0x5	Occurs when the processor external interrupt request pin is asserted (LOW) and IRQ interrupts are enabled.
Random	ERROR_FIQ	0x6	Occurs when the processor external fast interrupt request pin is asserted (LOW) and FIQ interrupts are enabled.
Device Errors – I2C			
Random	ERROR_I2C_TIMEOUT	0x11	
Random	ERROR_I2C_RESTART	0x12	

Table continues on the next page...

[8] To debug the root cause of failure and view the error code, Reset has to be disabled on the SoC.

Table 54. ISBC error codes (continued)

When error generated	Error code	Value	Description
Random	ERROR_I2C_NODEV	0x13	
Random	ERROR_I2C_NOT_IDLE	0x14	
Random	ERROR_I2C_NOT_BUSY	0x15	
Random	ERROR_I2C_INVALID_OFFSET	0x16	
Random	ERROR_I2C_NO_WAKEUP_INIT	0x17	
Random	ERROR_I2C_NO_WAKEUP_READ	0x18	
Random	ERROR_I2C_NOACK	0x19	
Random	ERROR_READ_TIMEOUT	0x1a	
Random	ERROR_SLAVE_ADDR_TIMEOUT	0x1b	
Random	ERROR_MEM_ADDR_TIMEOUT	0x1c	
Device Errors – ESDHC			
Random	ERROR_ESDHC_CARD_DETECT_FAIL	0x31	
Random	ERROR_ESDHC_UNUSABLE_CARD	0x32	
Random	ERROR_ESDHC_COMMUNICATION_ERROR	0x33	
Random	ERROR_ESDHC_BLOCK_LENGTH	0x34	
Device Errors – QSPI			
Random	ERROR_QSPI_INVALID_OFFSET	0x41	
Phase – “**RCW**”			
RCW Phase	ERROR_PREAMBLE	0x50	Preamble not found.
RCW Phase	ERROR_RCW_CMD_NOT_FOUND	0x51	RCW command not found
RCW Phase	ERROR_RCW_CHECKSUM_MISMATCH	0x52	Checksum mismatch in RCW
RCW Phase	ERROR_RCW_SRC_INVALID	0x58	RCW_SRC is not a valid source
RCW Phase	ERROR_RCW_REQ_NOT_SET	0x59	RCW_REQ bit never set by Reset state machine (RSM)
RCW Phase	ERROR_PBI_REQ_NOT_SET	0x60	PBI_REQ bit never set (by RSM)
Phase = **PBI**			
PBI Phase	ERROR_SEC_CAAM_INIT	0x61	CAAM init failed (Would rarely occur)
PBI Phase	ERROR_SEC_CAAM_NOT_FOUND	0x62	CAAM block not found in case of secure boot
PBI Phase	ERROR_PBI_SRC_NOT_SAME_AS_RCW_SRC	0x64	Mismatch between RCW_SRC and PBI_SRC fields
PBI Phase	ERROR_PBI_LENGTH	0x65	PBI length defined in RCW[PBI_LEN] field is invalid

Table continues on the next page...

Table 54. ISBC error codes (continued)

When error generated	Error code	Value	Description
PBI Phase	ERROR_PBI_LAST _CMD_NOT_STOP	0x66	STOP or CRC&STOP not found at the end of the specified PBI Length.
PBI Phase	ERROR_PBI_ COMMAND_UNKNOWN	0x67	An invalid command parsed by PBI Parser
PBI Phase	ERROR_CAAM_SELF_TEST	0x6a	CAAM self-test failed
PBI Phase	ERROR_PBI_ COPY_INVALID_ SRC_TYPE	0x70	Copy command, src field does not match the RCW_SRC field
PBI Phase	ERROR_PBI_ COPY_INVALID_ DST_ADDR	0x71	Copy command, dest field is not 0x00
PBI Phase	ERROR_PBI_ COPY_INVALID_SRC_ADDR_ SRC_ADDR	0x72	SRC address is invalid (ROM/ OCRAM reserved for SP)
PBI Phase	ERROR_PBI_CCSR_BYTE_COUNT	0x74	Byte count in CCSR Write not valid
PBI Phase	ERROR_PBI_CCSR_4_BYTE_ALLIGNED	0x75	Offset is not 4 byte aligned
PBI Phase	ERROR_PBI_CCSR_OFFSET_INVALID	0x76	Offset is invalid that is less than allowed CCSR Base 0x0100_0000
PBI Phase	ERROR_PBI_ACSR_INVALID_ADDRESS	0x78	Source address in ACSR invalid (invalid addresses - OCRAM or ROM address)
PBI Phase	ERROR_PBI_ACSR_BYTE_COUNT	0x79	Byte count in ACSR write command not valid
PBI Phase	ERROR_PBI_ACSR_WINDOW_NOT_SET	0x7a	ATU Window is not configured
PBI Phase	ERROR_PBI_ACSR_OFFSET_ALLIGNED	0x7b	ACSR offset is invalid and trying to write to Reserved space on OCRAM.
PBI Phase	ERROR_PBI_ALTCFG_WNDW_INVALID	0x7c	ATU Window is invalid
PBI Phase	ERROR_PBI_JUMP_OUT_LENGTH	0x80	Offset specified in JUMP command does not lie in PBI length range
PBI Phase	ERROR_PBI_JUMP_4_BYTE_ALLIGNED	0x81	Offset specified in JUMP command is not 4 byte aligned
PBI Phase	ERROR_PBI_JUMP_OFFSET_0	0x82	Offset specified in JUMP command is 0
PBI Phase	ERROR_PBI_LOADC_4_BYTE_ALLIGNED	0x84	Address specified in LOAD condition command is not 4 byte aligned
PBI Phase	ERROR_PBI_JUMPC_OUT_LENGTH	0x88	Offset specified in JUMP command does not lie in PBI length range
PBI Phase	ERROR_PBI_JUMPC_4_BYTE_ALLIGNED	0x89	Offset specified in JUMP conditional command is not 4 byte aligned
PBI Phase	ERROR_PBI_JUMPC_CONDITION_NOT_SET	0x8a	Jump conditional command encountered before condition is set using Load Condition
PBI Phase	ERROR_PBI_CRC_MISMATCH	0x90	CRC mismatch

Table continues on the next page...

Table 54. ISBC error codes (continued)

When error generated	Error code	Value	Description
PBI Phase	ERROR_PBI_POLL	0x91	Poll timeout
PBI Phase	ERROR_PBI_POLL_4_BYTE_ALLIGNED	0x92	Address being polled is not 4 byte aligned
PBI Phase	ERROR_PBI_BOOT1_CSF_INVALID_ADDR	0x94	Address of CSF header is not valid
PBI Phase	ERROR_PBI_BOOT1_CSF_ALLIGNED	0x95	Address of CSF header is not 4 byte aligned
Phase = **Verify** (System State Errors (Secure boot))			
Before PBI verification	ERROR_STATE_NOT_CHECK	0xf0	SEC_MON State Machine not in CHECK state at start of ISBC in primary flow. Some Security violation could have occurred.
Before PBI verification	ERROR_STATE_NOT_CHECK_TRUSTED	0xf1	SEC_MON State Machine not in CHECK/Trusted state at start of ISBC in secondary flow.
Phase = **Verify** (Secure Boot Fatal errors)			
Verify PBI	ERROR_PBI_COMMANDS_NOT_FOUND	0xf4	Not having PBI commands in RCW is error scenario for secure boot
Verify PBI	ERROR_SEC_HDR_NOT_FOUND	0xf5	Error if security header command not found in RCW. Expected location of Security Header command • After Preamble for hard coded RCW • After preamble and rcw for other RCW sources
Phase = **Verify** (Secure Boot Fatal (Header parsing errors))			
Verify PBI	ERROR_HEADER_LOC	0xf8	Header location is invalid
Verify PBI	ERROR_HEADER_BARKER	0xf9	Barker code in the header is incorrect
Verify PBI	ERROR_HEADER_INVALID	0xfa	Flag B01 in the header identifies this as SPL header
Phase = **Verify** (Secure Boot Non Fatal (Key/UID related errors))			
Verify PBI	ERROR_INVALID_SRK_ENTRY_KEYLEN	0x210	Length of public key specified in one of the entries in srk table is not one of the supported values. (1k, 2k, or 4k)
Verify PBI	ERROR_ KEY_LEN_ NOT_TWICE_SIG_LEN	0x211	Public key is not twice the length of the RSA signature
Verify PBI	ERROR_ KEY_MOD_1	0x212	Most significant bit of modulus in header is zero.
Verify PBI	ERROR_ KEY_MOD_2	0x213	Modulus in header is even number
Verify PBI	ERROR_ SIG_KEY_MOD	0x214	Signature value is greater than modulus in header
Verify PBI	ERROR_ INVALID_SRK_NUM_ENTRY	0x215	Number of entries field in CSF Header is > 8 (This is when srk_flag in header is 1)

Table continues on the next page...

Table 54. ISBC error codes (continued)

When error generated	Error code	Value	Description
Verify PBI	ERROR_ INVALID_KEY_NUM	0x216	Key number to be used from srk table is not present in table. (This is when srk_flag in header is 1)
Verify PBI	ERROR_ KEY_REVOKED	0x217	Key selected from srk table has been revoked (This is when srk_flag in header is 1)
Verify PBI	ERROR_ FSL_UID	0x220	FSL_UID in ESBC header did not match the FSL_UID in SFP if fsl uid flag Is 1
Verify PBI	ERROR_ OEM_UID0	0x221	OEM_UID0 in ESBC header did not match the OEM_UID0 in SFP if oem uid0 flag is 1.
Verify PBI	ERROR_ OEM_UID1	0x222	OEM_UID1 in ESBC header did not match the OEM_UID1 in SFP if oem uid1 flag is 1.
Verify PBI	ERROR_ OEM_UID2	0x223	OEM_UID1 in ESBC header did not match the OEM_UID1 in SFP if oem uid1 flag is 1.
Verify PBI	ERROR_ OEM_UID3	0x224	OEM_UID1 in ESBC header did not match the OEM_UID1 in SFP if oem uid1 flag is 1.
Verify PBI	ERROR_ OEM_UID4	0x225	OEM_UID1 in ESBC header did not match the OEM_UID1 in SFP if oem uid1 flag is 1.
Phase = **Verify** (Header Verification Failure) Secure Boot Non Fatal			
Verify PBI	ERROR_ HASH_COMPARE_KEY	0x240	Super Root Key Hash Comparison failure. Mismatch in the hash of the public key/srk table as present in the header with the value in the SRK HASH fuse.
Verify PBI	ERROR_ HASH_COMPARE_EM	0x241	RSA signature check failure. Signature provided by you in the header does not match with the signature of the ESBC image generated by ISBC. The ESBC image loaded by you may be different than the image used while generating the signature (using CST)
Phase = **Verify** (Secure Boot Fatal (Header parsing errors))			
Verify Boot1	ERROR_HEADER_LOC	0x100f8	Header location is invalid
Verify Boot1	ERROR_HEADER_BARKER	0x100f9	Barker code in the header is incorrect.
Verify Boot1	ERROR_HEADER_INVALID	0x100fa	Flag B01 in the header identifies this as SPL header.
Phase = Verify (Secure Boot Fatal (SG Table related errors))			
Verify Boot1	ERROR_SG_ENTRY_POINT	0x10200	Entry point is not within any of SG entries
Verify Boot1	ERROR_SG_NUM_ENTRY	0x10201	No. of entries in SG table is 0 or >8
Verify Boot1	ERROR_SG_SIZE_ZERO	0x10202	A SG entry has size 0
Phase = **Verify** (Secure Boot Non-Fatal (Key/UID related errors))			

Table continues on the next page...

Table 54. ISBC error codes (continued)

When error generated	Error code	Value	Description
Verify Boot1	ERROR_INVALID_SRK_ENTRY_KEYLEN	0x10210	Length of public key specified in one of the entries in srk table is not one of the supported values. (1k, 2k, or 4k)
Verify Boot1	ERROR_ KEY_LEN_ NOT_TWICE_SIG_LEN	0x10211	Public key is not twice the length of the RSA signature
Verify Boot1	ERROR_ KEY_MOD_1	0x10212	Most significant bit of modulus in header is zero
Verify Boot1	ERROR_ KEY_MOD_2	0x10213	Modulus in header is even number
Verify Boot1	ERROR_ SIG_KEY_MOD	0x10214	Signature value is greater than modulus in header
Verify Boot1	ERROR_ INVALID_SRK_NUM_ENTRY	0x10215	Number of entries field in CSF Header is > 8 (This is when srk_flag in header is 1)
Verify Boot1	ERROR_ INVALID_KEY_NUM	0x10216	Key number to be used from srk table is not present in table. (This is when srk_flag in header is 1)
Verify Boot1	ERROR_ KEY_REVOKED	0x10217	Key selected from srk table has been revoked (This is when srk_flag in header is 1)
Verify Boot1	ERROR_ FSL_UID	0x10220	FSL_UID in ESBC Header did not match the FSL_UID in SFP if fsl uid flag Is 1
Verify Boot1	ERROR_ OEM_UID0	0x10221	OEM_UID0 in ESBC Header did not match the OEM_UID0 in SFP if oem uid0 flag is 1.
Verify Boot1	ERROR_ OEM_UID1	0x10222	OEM_UID1 in ESBC Header did not match the OEM_UID1 in SFP if oem uid1 flag is 1.
Verify Boot1	ERROR_ OEM_UID2	0x10223	OEM_UID1 in ESBC Header did not match the OEM_UID1 in SFP if oem uid1 flag is 1.
Verify Boot1	ERROR_ OEM_UID3	0x10224	OEM_UID1 in ESBC Header did not match the OEM_UID1 in SFP if oem uid1 flag is 1.
Verify Boot1	ERROR_ OEM_UID4	0x10225	OEM_UID1 in ESBC Header did not match the OEM_UID1 in SFP if oem uid1 flag is 1.
Phase = **Verify** (Header Verification Failure) Secure Boot Non-Fatal			
Verify Boot1	ERROR_ HASH_COMPARE_KEY	0x10240	Super Root Key Hash Comparison failure. Mismatch in the hash of the public key/srk table as present in the header with the value in the SRK HASH fuse.
Verify Boot1	ERROR_ HASH_COMPARE_EM	0x10241	RSA signature check failure. Signature provided by you in the header does not match with the signature of the ESBC image generated by ISBC. The ESBC image loaded by you may be different than the image used while generating the signature(using CST)

Table continues on the next page...

Table 54. ISBC error codes (continued)

When error generated	Error code	Value	Description
Verify Boot1	ERROR_PRIVATE_KEY_DERIVATION	0x10250	Error in Private key derivation when enabling Manufacturing Protection.

6.1.2.11 ESBC error codes

Table 55. ESBC validation failures

Value	Code	Definition
0x4	ERROR_ESBC_CLIENT_HEADER_BARKER	Wrong barker code in header
0x8	ERROR_ESBC_CLIENT_HEADER_KEY_LEN	Wrong public key length in header
0x10	ERROR_ESBC_CLIENT_HEADER_SIG_LEN	Wrong signature length in header
0x20	ERROR_ESBC_CLIENT_HEADER_KEY_LEN_NOT_TWICE_SIG_LEN	Public key length not twice of signature length
0x40	ERROR_ESBC_CLIENT_HEADER_KEY_MOD_1	Public key Modulus most significant bit not set
0x80	ERROR_ESBC_CLIENT_HEADER_KEY_MOD_2	Public key Modulus in header not odd
0x100	ERROR_ESBC_CLIENT_HEADER_SIG_KEY_MOD	Signature not less than modulus
0x400	ERROR_ESBC_CLIENT_HASH_COMPARE_KEY	Public key hash comparison failed
0x800	ERROR_ESBC_CLIENT_HASH_COMPARE_EM	RSA verification failed
0x10000	ERROR_ESBC_CLIENT_HEADER_SG	No SG support
0x20000	ERROR_ESBC_WRONG_CMD	Failure in command/Unknown command/Wrong arguments of boot script.
0x40000	ERROR_ESBC_MISSING_BOOTM	Bootm command missing from boot script.

6.1.2.12 Troubleshooting

	Symptoms	Reasons and/or Recommended actions
1.	No print on UART console.	Check the status register of sec mon block. Refer to the details of the register from the Reference Manual. Bits OTPMK_ZERO, OTMPK_SYNDROME and PE should be 0 otherwise there is some error in the OTPMK fuse blown by you. If OTMPK fuse is correct (see Step 1), check the DCFG SCRATCHRW3 register for error code. For a list of error codes, see ISBC error codes If **Error code = 0** then check the Security Monitor state in HPSR register of Sec Mon. Sec Mon in Check State (0x9) If ITS fuse = 1, then it means ISBC code has reset the board. This may be due to the following reasons “ Hash of the public key used to sign the ESBC U-Boot does not match with the value in SRK Hash Fuse Or Signature verification of the image failed Sec Mon in Trusted State (0xd) or Non-Secure State (0xb) Check the entry point field in the CSF header. If entry point is correct, ensure that U-Boot image has been signed with the correct input file.
2.	Instead of Linux prompt, you get a U-Boot command prompt.	You have not booted in secure boot mode. You never get a U-Boot prompt in secure boot flow. You would reach this stage if ITS = 0 and you are running normal U-Boot.
3	U-Boot hangs or board resets	Some validation failure occurred in U-Boot. Error code and description would be printed on U-Boot console. See ESBC error codesfor more details on errors.

6.1.3 Code Signing Tool

To assist with signing of various images and creation of CSF header, NXP offers a Code Signing Tool (CST). It is generally expected that the CST signs images in an offline process

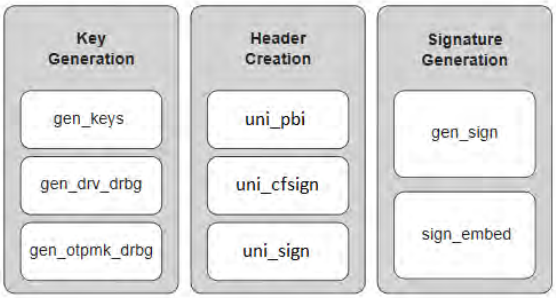

Figure 27. Tool in CST Package

6.1.3.1 Key generation

The CST begins by generating a RSA public and private key pair using OPENSSL APIs. The key pair consists of 3 parts; N, E, and D.

N - Modulus

E - Encryption exponent

D - Decryption exponent

Public Key - It is a combination of E and N components.

Private Key - It is a combination of D and N components.

The application allows the user to feed 3 key sizes for generating keys. The key sizes are 1024 bits, 2048 bits, and 4096 bits.

It is the OEM's responsibility to tightly control access to the RSA private signature key. If this key is ever exposed, attackers will be able to generate alternate images that will pass secure boot. If this key is ever lost, the OEM will be unable to update the image.

6.1.3.1.1 gen_keys

This utility generates a RSA public and private key pair using OPENSSL APIs. The key pair consists of 3 parts; N, E, and D.

N – Modulus

E – Encryption exponent

D – Decryption exponent

Public Key - It is a combination of E and N components.

Private Key - It is a combination of D and N components.

It is the OEM’s responsibility to tightly control access to the RSA private signature key. If this key is ever exposed, attackers will be able to generate alternate images that will pass secure boot. If this key is ever lost, the OEM will be unable to update the image.

Features

- The application allows the user to generate 3 sizes keys. The key sizes are 1024 bits, 2048 bits, and 4096 bits.
- It generates RSA key pairs in PEM format.
- Keys are generated and stored in the files. User can provide file names through command line option.

Usage

./gen_keys [OPTION] SIZE

SIZE refers to size of public key in bits. (Modulus size).

Size supported -- 1024, 2048, 4096. The generated keys would be in PEM format.

Options:

-h,--help Usage of the command

-k,--pubkey File where Public key would be stored in PEM format (default = srk.pub)

-p,--privkey File where Private key would be stored in PEM format (default = srk.priv)

Usage Example

```
$ ./gen_keys 1024

    #------------------------------------------------------#
    #-------         --------     --------        -------#
    #------- CST (Code Signing Tool) Version 2.0  -------#
    #-------         --------     --------        -------#
    #------------------------------------------------------#

==================================================================
This product includes software developed by the OpenSSL Project
for use in the OpenSSL Toolkit (http://www.openssl.org/)
This product includes cryptographic software written by
Eric Young (eay@cryptsoft.com)
==================================================================

Generated SRK pair stored in :
        PUBLIC KEY srk.pub
        PRIVATE KEY srk.pri
```

```
$ ./gen_keys 4096 -k my.pub -p my.pri

    #------------------------------------------------------#
    #-------         --------     --------        -------#
    #------- CST (Code Signing Tool) Version 2.0  -------#
    #-------         --------     --------        -------#
    #------------------------------------------------------#

==================================================================
This product includes software developed by the OpenSSL Project
for use in the OpenSSL Toolkit (http://www.openssl.org/)
This product includes cryptographic software written by
Eric Young (eay@cryptsoft.com)
==================================================================

Generated SRK pair stored in :
```

```
        PUBLIC KEY my.pub
        PRIVATE KEY my.pri
```

6.1.3.1.2 gen_otpmk_drbg

This utility in the Code Signing Tool inserts hamming code in a user defined 256b hexadecimal string, or generate a 256b hexadecimal random number and inserts the hamming code in it which can be used as OTPMK value.

NOTE

For random number generation, Hash_DRBG library is used. The Hash_DRBG is an implementation of the NIST approved DRBG (Deterministic Random Bit Generator), specified in SP800-90A. The entropy source is the Linux /dev/random.

Features:

- Generates random numbers, which can be used if user defined string is not provided, to generate OTPMK value.
- Calculates and embeds the hamming code in the hexadecimal string.

Usage:

./gen_otpmk_drbg -b <bit_order> --s [string]

<bit_order> : (1 or 2) OTPMK Bit Ordering Scheme in SFP

1 : TA1.x

2 : TA2.x, TA3.x

<string> : 32 byte string

In case string is not specified, the utility generates a 32 bytes random number and embeds hamming code in it.

Usage Example:

```
$ gen_otpmk_drbg -b 1

        #------------------------------------------------------#
        #-------         --------     --------        -------#
        #------- CST (Code Signing Tool) Version 2.0  -------#
        #-------         --------     --------        -------#
        #------------------------------------------------------#

Input string not provided
Generating a random string
-----------------------------------------
* Hash_DRBG library invoked
* Seed being taken from /dev/urandom
-----------------------------------------
OTPMK[255:0] is:
d2f63a662f69a1faa4c2406f83eedde7647fbd3c62ac442c67fad2d4cda8b3a0

 NAME    |     BITS     |    VALUE
_________|______________|___________
OTPMKR 0 |  31-  0      |   cda8b3a0
OTPMKR 1 |  63- 32      |   67fad2d4
OTPMKR 2 |  95- 64      |   62ac442c
OTPMKR 3 | 127- 96      |   647fbd3c
OTPMKR 4 | 159-128      |   83eedde7
OTPMKR 5 | 191-160      |   a4c2406f
```

```
OTPMKR 6 | 223-192      |   2f69a1fa
OTPMKR 7 | 255-224      |   d2f63a66
```

```
$ ./gen_otpmk_drbg -b 2 --s 1111111122222222333333334444444455555555666666667777777788888888


        #------------------------------------------------------#
        #-------         --------     --------        -------#
        #------- CST (Code Signing Tool) Version 2.0  -------#
        #-------         --------     --------        -------#
        #------------------------------------------------------#

OTPMK[255:0] is:
1111111122222222333333334444444455555555666666667777777788888888

 NAME    |     BITS     |    VALUE
_________|______________|___________
OTPMKR 0 | 255-224      |   11111111
OTPMKR 1 | 223-192      |   22222222
OTPMKR 2 | 191-160      |   33333333
OTPMKR 3 | 159-128      |   44444444
OTPMKR 4 | 127- 96      |   55555555
OTPMKR 5 |  95- 64      |   66666666
OTPMKR 6 |  63- 32      |   77777777
OTPMKR 7 |  31-  0      |   88888888
```

6.1.3.1.3 gen_drv_drbg

This utility in the Code Signing Tool inserts hamming code in a user defined 64b hexadecimal string, or generate a 64b hexadecimal random number and inserts the hamming code in it which can be used as Debug Response Value.

NOTE

For random number generation, Hash_DRBG library is used. The Hash_DRBG is an implementation of the NIST approved DRBG (Deterministic Random Bit Generator), specified in SP800-90A. The entropy source is the Linux /dev/random.

Features:

- Generates random numbers, which can be used if user defined string is not provided, to generate Debug Response value.
- Calculates and embeds the hamming code in the hexadecimal string.

Usage:

./gen_drv_drbg <Hamming_algo> [string]

Hamming_algo : Platforms

A1 : T10xx, T20xx, T4xxx, P4080rev1, B4xxx

A2 : LSx

B : P10xx, P20xx, P30xx, P4080rev2, P4080rev3, P50xx, BSC913x, C29x

string : 8 byte string

In case string is not specified, the utility generates an 8 byte random number and embeds hamming code in it.

Usage Example:

```
$ ./gen_drv_drbg A2

    #------------------------------------------------------#
```

```
    #-------         --------     --------        -------#
    #------- CST (Code Signing Tool) Version 2.0  -------#
    #-------         --------     --------        -------#
    #-----------------------------------------------------#

Input string not provided
Generating a random string
-----------------------------------------
* Hash_DRBG library invoked
* Seed being taken from /dev/random
-----------------------------------------
Random Key Genearted is:
f4bfc65e16284dbb
DRV[63:0] after Hamming Code is:
f4bfc65f16294daf
 NAME    |     BITS     |    VALUE
_________|______________|___________
DRV 0    |    63 - 32   | f4bfc65f
DRV 1    |    31 - 0    | 16294daf
```

```
$ ./gen_drv_drbg A2 1652afe595631dec

    #-----------------------------------------------------#
    #-------         --------     --------        -------#
    #------- CST (Code Signing Tool) Version 2.0  -------#
    #-------         --------     --------        -------#
    #-----------------------------------------------------#

DRV[63:0] after Hamming Code is:
1652afe495631cea
 NAME    |     BITS     |    VALUE
_________|______________|___________
DRV 0    |    63 - 32   | 1652afe4
DRV 1    |    31 - 0    | 95631cea
```

6.1.3.2 Header creation

6.1.3.2.1 uni_pbi

Following options are available with the uni_pbi command.

```
$ ./uni_pbi
        --verbose    Display header Info after Creation. This option is invalid for TA2 platform
        --hash       Print the SRK(Public key) hash. This option is invalid for TA2 platform
        --img_hash   Header is generated without Signature.
                     Image Hash is stored in a separate file. This option is invalid for TA2 platform
        --help       Show the Help for Tool Usage.
```

The input to this tool will be an input file specifying the platform. Based on that, there are two separate behaviour of the tool.

uni_pbi for TA2.x platforms is used for the following:

- To add boot location pointer and set SB_EN and BOOT_HO value for secure boot
- (optional) To add PBI commands (ACS write commands to add U-Boot spl and its header to OCRAM from Non-XIP memory).
- (optional) To append images (U-Boot, Boot script, and their headers) to RCW file.

Refer Hardware Pre-Boot Loader (PBL) based platforms for TA2.x based platforms

uni_pbi for Service processor based platforms

- uni_pbi tool is used for creating signature and header over PBI commands.

Table 56. Description of fields in input files of both type of platforms (TA2.x and TA3.x)

Field name	Description	Platform supported
PLATFORM	The platform for which tool is being used	TA 2.x and TA 3.x
RCW_PBI_FILENAME	Input image file name. The rcw file which has to be modified.	TA 2.x and TA 3.x
BOOT1_PTR	Address of ISBC (Boot1) CSF Header	TA 2.x and TA 3.x
OUTPUT_RCW_PBI_FILENAME	To identify the platform for which the tool is being used. This field is optional. If not specified, it will take default name.	TA 2.x
BOOT_SRC	Only to be specified in case of **SD boot**	TA 2.x
SB_EN	Field to enable or disable secure boot, by setting SB_EN bit in rcw file to 1	TA 2.x
BOOT_HO	To put core in hold-off state to fuse key hash in case of secure boot, by setting BOOT_HO bit in rcw file to 1	TA 2.x
COPY_CMD	To add ACS write commands to write U-Boot spl and is header to OCRAM. This is an optional field. If not mentioned, won't add the command.	TA 2.x
APPEND_IMAGES	To append U-Boot, Boot script, and their headers to the new rcw generated. It is an optional field. This is an optional field, if not specified, no images will be appended.	TA 2.x
KEY_SELECT	Specify the key to be used in signature generation from the SRK table	TA 3.x
PRI_KEY	Private key file name in PEM format. The maximum keys supported are 8.	TA 3.x
FSL_UID_x	FSL UID(s) to be populated in the header	TA 3.x
OEM_UID_x	OEM UID(s) to be populated in the header	TA 3.x
OUTPUT_HDR_FILENAME	Output file name of the header. An output file name is generated with rcw commands appended with signed PBI commands.	TA 3.x
IMAGE_HASH_FILENAME	used with '--img_hash' option (Name of file in which Image Hash is stored)	TA 3.x
MP_FLAG	Manufacturing Protection Flag	TA 3.x
ISS_FLAG	Increment Security State Flag	TA 3.x
LW_FLAG	Leave Writeable Flag	TA 3.x
VERBOSE	Specify VERBOSE as 1, if you want to display header information. This can also be done with '--verbose' option	TA 3.x
IE_TABLE_ADDR	64-bit address of IE table(to be used in case of IE key extension feature usage)	TA 3.x

Sample input files are present in the CST tool at location: input_files/uni_pbi/<platform>/

For example, input_files/uni_pbi/ls1/input_pbi_sd_secure

NOTE

In TA 3.x, SB_EN and BOOT_HO fields are by default set to 1 to enable secure boot.

NOTE

TA 3.x : LS1088, LS2088. To know platforms under TA 2.x, refer Trust Architecture and SFP Information

6.1.3.2.1.1 Sample Input File

Sample input file for TA2 based platforms

```
/*
 * Copyright 2016 NXP
 */
-------------------------------------------------------------------------------
# For PBI Creation
# Name of RCW + PBI file [Mandatory]
RCW_PBI_FILENAME= u-boot-with-spl-pbl.bin
-------------------------------------------------------------------------------
# Specify the output file name [Optional].
# Default Values chosen in Tool
OUTPUT_RCW_PBI_FILENAME=u-boot-with-spl-pbl-sec.bin
-------------------------------------------------------------------------------
#specify the boot src
BOOT_SRC=SD_BOOT
# Specify the platform
PLATFORM=LS1020
# Specify the RCW Fields. (0 or 1) - [Optional]
SB_EN=1
BOOT_HO=1
BOOT1_PTR=10016000
-------------------------------------------------------------------------------
# Specify the PBI commands - [Optional]
# Argument: COPY_CMD = (src_offset, dest_offset, Image name)
# Split hdr_uboot_spl.out in PBI commads
COPY_CMD={ffffffff,10016000,hdr_uboot_spl.out;}
-------------------------------------------------------------------------------
# Specify the Images to be appended
# Arguments: APPEND_IMAGES=(Image name, Offset from start)
APPEND_IMAGES={u-boot-dtb.bin,00022000;}
APPEND_IMAGES={hdr_uboot.out,00122000;}
APPEND_IMAGES={hdr_bs.out, 00124000;}
APPEND_IMAGES={bootscript,00128000;}
-------------------------------------------------------------------------------
```

Sample input file for SP based platforms

```
-------------------------------------------------
# Specify the platform. [Mandatory]
# Choose Platform -
# TRUST 3.1: LS2088, LS1088
PLATFORM=LS1088
-------------------------------------------------
# Specify the Key Information.
# PUB_KEY [Mandatory] Comma Seperated List
# Usage: <srk1.pub>, <srk2.pub> .....
PUB_KEY=srk.pub
# KEY_SELECT [Mandatory]
# USAGE (for TRUST 3.1): (between 1 to 8)
```

```
KEY_SELECT=1
# PRI_KEY [Mandatory] Comma Seperated List for Signing
# USAGE: <srk.pri>, <srk2.pri>
PRI_KEY=srk.pri
--------------------------------------------------
# For PBI Signing
# Name of RCW + PBI file [Mandatory]
RCW_PBI_FILENAME=rcw.bin
# Address of ISBC (Boot1) CSF Header [Mandatory]
BOOT1_PTR=20c00000
--------------------------------------------------
# Specify OEM AND FSL ID to be populated in header. [Optional]
# e.g FSL_UID_0=11111111
FSL_UID_0=
FSL_UID_1=
OEM_UID_0=
OEM_UID_1=
OEM_UID_2=
OEM_UID_3=
OEM_UID_4=
--------------------------------------------------
# Specify the output file names [Optional].
# Default Values chosen in Tool
OUTPUT_HDR_FILENAME=rcw_sec.bin
IMAGE_HASH_FILENAME=
--------------------------------------------------
# Specify The Flags. (0 or 1) - [Optional]
MP_FLAG=0
ISS_FLAG=1
LW_FLAG=0
--------------------------------------------------
# Specify VERBOSE as 1, if you want to Display Header Information [Optional]
VERBOSE=0
```

6.1.3.2.2 uni_sign

uni_sign tool can be used for the following functions.

- CSF header generation along with signature for both ISBC and ESBC phase
- CSF header generation without signature if private key is not provided

  uni_sign tool (with ESBC = 0 in input file) is used for creating signature and header over Boot1 image to be verified by ISBC

  uni_sign tool (with ESBC = 1 in input file) is used for creating signature and header over images to be verified by ESBC

Following options are available with the uni_sign command.

Usage:

To view usage of tool:

```
./uni_sign
    --verbose    Display header Info after Creation
    --hash       Print the SRK(Public key) hash
    --img_hash   Header is generated without Signature. Image Hash is stored in a separate file
    --out <file>  Header file name
    --in <file>   Input file for signature calculation. This option would override the filename in
IMAGE_1 in input_file if present
    --app <file>  File to be appended to the header
```

```
    --app_off <offset>    Offset at which file will be appended to the header
    --help       Show the Help for Tool Usage
```

For example:

```
./uni_sign --in <inp_file>  --out <op file> --app_off <offset> --app <file> <input_file>
```

NOTE

There are scenarios when a build script using the tool needs to modify the input file name or the output header file name. These command line options provide a way to override the values as specified in the input file.

Table 57. Description of fields

Field	Field description	Platform supported
PLATFORM	To identify the platform/SoC for which CF header needs to be created.	All
ESBC	Do not set this flag when code signing is being performed on the image directly verified by the ISBC. For later images in the chain of trust, set this flag.	TA3.x
ENTRY_POINT	Entry point address or Image start address field in the header.	All
PRI_KEY	Private key file name to be used for signing the image. (File has to be in PEM format) (default = srk.pri generated by gen_keys command) FILE1 [,FILE2, FILE3, FILE4]. Multiple key support for Trust Arch v2.x devices only.	All
PUB_KEY	Public key file name in PEM format. (default = srk.pub generated by gen_keys) FILE1 [,FILE2, FILE3, FILE4]. Multiple key support for Trust Arch v2.x devices only.	All
KEY_SELECT	Specify the key to be used in signature generation when more than one key has been given as input. (Default=1, first key will be selected)	All
IMAGE_1 - IMAGE_8	Create Entries for SG table in the format { IMAGE_NAME, SRC_ADDR, DST_ADDR }	All
OEM_UID_x	OEM UID to be populated in the header.	All
FSL_UID_x	FSL UID to be populated in the header.	All
HK_AREA_POINTER	House Keeping Area Starting Pointer required by Sec (Required for Trust Arch v2.x devices only when esbc option is not provided)	TA2.x
HKAREA_SIZE	House Keeping Area Size (Required for Trust Arch v2.x devices only when esbc option is not provided)	TA2.x
OUTPUT_HDR_FILENAME	Name of the combined header binary to be created by tool	All
SG_TABLE_ADDR	Specify SG_TABLE Address where Scatter Gather table is present for 2041/3041/4080/5020/5040 when ESBC=0.	TA1.x
OUTPUT_SG_BIN	Specify the output file name of sg table.	TA1.x

Table continues on the next page...

Table 57. Description of fields (continued)

Field	Field description	Platform supported
IMAGE_TARGET	Specify the target where image will be loaded. For example,NOR_8B/NOR_16B/ NAND_8B_512/NAND_8B_2K/NAND_8B_4K/ NAND_16B_512/NAND_16B_2K/ NAND_16B_4K/SD/MMC/SPI	All
SEC_IMG	Flag for Secondary Image. Required for Trust Arch v2.x devices only	TA2.x
MP_FLAG	Specify Manufacturing Protection Flag. Available for LS1 only.	All, only needed in ISBC phase
VERBOSE	Specify Verbose option. Contents of header generated will be printed.	All
IMAGE_HASH_FILENAME	used with '--img_hash' option (Name of file in which Image Hash is stored)	TA3.x
ISS_FLAG	Increment Security State Flag	TA3.x, only needed in ISBC phase
LW_FLAG	Leave Writeable Flag	TA3.x, only needed in ISBC phase
ESBC_HDRADDR	32-bit address where header generated will be placed. Used to calculate IE key table address	TA3.x, only to be used in case of IE key extension feature usage
IE_KEY	Comma separated list of files containing public keys(IE Keys)	TA3.x, only to be used in case of IE key extension feature usage
IE_REVOC	Comma separated list of numbers that are to be revoked from IE table	TA3.x, only to be used in case of IE key extension feature usage
IE_KEY_SEL	No. of keys in IE table that is to be used to validate image	TA3.x, only to be used in case of IE key extension feature usage

Sample input files can be referred to, from input_files/uni_sign/I<platform>

For IE keys, you can refer to input_files/uni_sign/I<platform>/ie_ke

TA3.x: LS2088 and LS1088. To know platforms under TA1.x and TA 2.x, refer Trust Architecture and SFP Information

6.1.3.2.2.1 Sample Input File

The input files will not have ESBC field (ESBC=0).

```
--------------------------------------------------
# Specify the platform. [Mandatory]
# Choose Platform -
# TRUST 3.1: LS2088, LS1088
```

```
# TRUST 1.0, 1.1, 2.0, 2.1: 1010/1040/2041/3041/4080/5020/5040/9131/9132/9164/4240/C290/LS1
PLATFORM=LS2088
--------------------------------------------------
# Entry Point/Image start address field in the header.[Mandatory]
# (default=ADDRESS of first file specified in images)
# Address can be 64 bit
ENTRY_POINT=30008000
--------------------------------------------------
# Specify the Key Information.
# PUB_KEY [Mandatory] Comma Seperated List
# Usage: <srk1.pub> <srk2.pub> .....
PUB_KEY=srk.pub
# KEY_SELECT [Mandatory]
# USAGE (for TRUST 3.1): (between 1 to 8)
KEY_SELECT=1
# PRI_KEY [Mandatory] Comma Seperated List for Signing
# USAGE: <srk.pri>, <srk2.pri>
PRI_KEY=srk.pri
--------------------------------------------------
# Specify IMAGE, Max 8 images are possible.
# DST_ADDR is required only for Non-PBL Platform. [Mandatory]
# USAGE : IMAGE_NO = {IMAGE_NAME, SRC_ADDR, DST_ADDR}
# Address can be 64 bit
IMAGE_1={u-boot.bin,30008000,ffffffff}
IMAGE_2={,,}
IMAGE_3={,,}
IMAGE_4={,,}
IMAGE_5={,,}
IMAGE_6={,,}
IMAGE_7={,,}
IMAGE_8={,,}
--------------------------------------------------
# Specify OEM AND FSL ID to be populated in header. [Optional]
# e.g FSL_UID_0=11111111
FSL_UID_0=
FSL_UID_1=
OEM_UID_0=
OEM_UID_1=
OEM_UID_2=
OEM_UID_3=
OEM_UID_4=
--------------------------------------------------
# Specify the output file names [Optional].
# Default Values chosen in Tool
OUTPUT_HDR_FILENAME=hdr_uboot.out
IMAGE_HASH_FILENAME=
RSA_SIGN_FILENAME=

--------------------------------------------------
# Specify The Flags. (0 or 1) - [Optional]
MP_FLAG=0
ISS_FLAG=1
LW_FLAG=0

--------------------------------------------------
# Specify VERBOSE as 1, if you want to Display Header Information [Optional]
VERBOSE=0
--------------------------------------------------
# Following fields are Required for 4240/9164/1040/C290 only
```

```
# Specify House keeping Area
# Required for 42409164/1040/C290 only when ESBC flag is not set. [Mandatory]
HK_AREA_POINTER=
HK_AREA_SIZE=
-------------------------------------------------
# Following field Required for 4240/9164/1040/C290 only
# Specify Secondary Image Flag. (0 or 1) - [Optional]
# (Default is 0)
SEC_IMAGE=
-------------------------------------------------
# Specify SG table address, only for (2041/3041/4080/5020/5040) with ESBC=0 - [Optional]
SG_TABLE_ADDR=
```

6.1.3.3 Signature generation

The tools in this category are provided in case the user does not want to share the Private Key with the CST tool. The **--img_hash** option in Header creation tools provides OEMs with the ability to perform code signing in a secure environment which does not run the NXP Code Signing Tool.

--img_hash option

- Generates hash file in binary format which contains SHA256 hash of the components required for signature.
- Generates output header binary file based on the fields specified in input file.
- Output header binary file does not contain signature.
- Provides flexibility to manually append signature at the end of output header file. Users can use their own custom tool to generate the signature. The signature offset chosen in the header is such that the signature can be appended at the end of the header file.
- This option does not require private key to be provided. But the corresponding public key from the public/ private key pair must be provided to calculate correct SHA256 hash.
- The SHA256 hash generated over CF header (in case of TA1.x platforms)) is then signed using RSA algorithm (OPENSSL APIs) with the private key. This encrypted hash is known as digital signature. This signature is placed at an offset from the CF header, which is later read by IBR.
- The SHA256 hash generated over CSF header, the public Key, the S/G table and the ESBC is also signed using RSA algorithm with the same private key. The signature generated is placed at an offset from the CSF header, which is again later read by IBR.

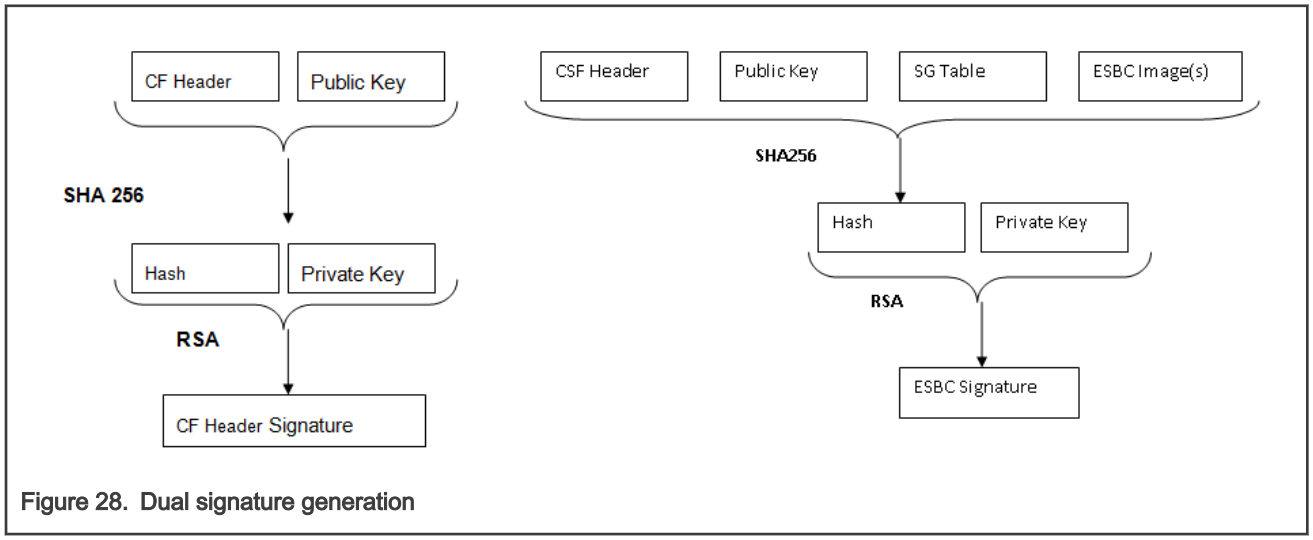

Figure 28. Dual signature generation

Usage example

```
$ ./uni_sign --img_hash --verbose input_files/uni_sign/<platform>/input_uboot_nor_secure


    #-------------------------------------------------------#
    #-------         --------     --------        -------#
    #------- CST (Code Signing Tool) Version 2.0  -------#
    #-------         --------     --------        -------#
    #-------------------------------------------------------#

============================================================
This tool includes software developed by OpenSSL Project
for use in the OpenSSL Toolkit (http://www.openssl.org/)
This product includes cryptographic software written by
Eric Young (eay@cryptsoft.com)
============================================================

Input File is input_files/uni_sign/<platform>/input_uboot_nor_secure

-----------------------------------------------
-    Dumping the Header Fields
-----------------------------------------------
- SRK Information
-     SRK Offset : 200
-     Number of Keys : 1
-     Key Select : 1
-     Key List :
-        Key1 srk.pub(100)
- UID Information
-     UID Flags = 00
-     FSL UID = 00000000_00000000
-     OEM UID0 = 00000000
-     OEM UID1 = 00000000
-     OEM UID2 = 00000000
-     OEM UID3 = 00000000
-     OEM UID4 = 00000000
- FLAGS Information
-     MISC Flags = 60
-         ISS = 1
-         MP = 0
-         LW = 0
-         B01 = 1
- Image Information
-     SG Table Offset : 800
-     Number of entries : 1
-     Entry Point : 30008000
-     Entry 1 : u-boot.bin (Size = 000c0000 SRC = 30008000 DST = ffffffff)
- RSA Signature Information
-     RSA Offset : a00
-     RSA Size : 80
-----------------------------------------------

Image Hash:
8588c174dd92f4a1b114b9029fc647e18cac4aaa46f03a6538ef20531e796e8f

***********************************************
* Image Hash Stored in File: hash.out
* Header File is w/o Signature appended
```

```
***********************************************

Header File Created: hdr_uboot.out

SRK (Public Key) Hash:
7df50d4256c4cbde4ef4ae9931042b1e44ff13aeb5107a7e0e9ee07e0fbfc236
     SFP SRKHR0 = 7df50d42
     SFP SRKHR1 = 56c4cbde
     SFP SRKHR2 = 4ef4ae99
     SFP SRKHR3 = 31042b1e
     SFP SRKHR4 = 44ff13ae
     SFP SRKHR5 = b5107a7e
     SFP SRKHR6 = 0e9ee07e
     SFP SRKHR7 = 0fbfc236
```

The tools are provided to create the signature file and embed the signature at the end of header file.

6.1.3.3.1 gen_sign

This tool is provided for the user to calculate signature for a given hash using CST tool. The tool requires only the hash file and private key file from the user as input. It would generate signature file as output.

It uses RSA_sign API of openssl to calculate signature over hash provided.

Usage

./gen_sign [option] <HASH_FILE> <PRIV_KEY_FILE>

--sign_file SIGN_FILE	Provides file name for signature to be generated as operand. SIGN_FILE is generated containing signature calculated over hash provided through HASH_FILE using private key provided through PRIV_KEY_FILE. With this option, HASH_FILE and PRIV_KEY_FILE are compulsory while SIGN_FILE is optional. The default value of SIGN_FILE is signout.
HASH_FILE	Name of hash file containing hash over signature needs to be calculated.
PRIV_KEY_FILE	Name of key file containing private key.

Usage example

After the hash file has been created as described in Signature generation, the tool can be used as described below.

```
$ ./uni_sign --img_hash input_files/uni_sign/<platform>/input_uboot_nor_secure
.
.
.

***********************************************
* Image Hash Stored in File: hash.out
* Header File is w/o Signature appended
***********************************************

Header File Created: hdr_uboot.out

$ ./gen_sign hash.out srk.pri

    #-----------------------------------------------------#
    #-------         --------     --------        -------#
    #------- CST (Code Signing Tool) Version 2.0  -------#
    #-------         --------     --------        -------#
    #-----------------------------------------------------#
```

```
Signature Length = 80
Hash in hash.out is signed with srk.pri
Signature is stored in file : sign.out
```

6.1.3.3.2 sign_embed

This tool embeds signature in the header file generated using img_hash option which generates header but does not embed signature in the header. This option opens header file and copies signature at the end of the file.

The header file generated with 'img_hash' option has padding added till signature offset, so that signature can be directly embedded to the end of the file.

Usage

./sign_embed <hdr_file> <sign_file>

hdr_file	Name of header file in which signature needs to be embedded
sign_file	Name of sign file containing signature which needs to be embedded

Usage example

```
$ ./sign_embed hdr_uboot.out sign.out

    #------------------------------------------------------#
    #-------          --------     --------         -------#
    #------- CST (Code Signing Tool) Version 2.0  -------#
    #-------          --------     --------         -------#
    #------------------------------------------------------#

hdr_uboot.out is appended with file sign.out (0x80)
```

NOTE

User can generate the complete header along with signature in a single step using uni_sign/uni_pbi tool without any option.

./uni_sign <input_file>

Or

User may wish to do it in three separate steps:

1. ./uni_sign **--img_hash** <input_file> (Create header file without signature and store the hash in a separate file)
2. ./gen_sign[9] [option] <HASH_FILE> <PRIV_KEY_FILE> (Sign the image hash using private key)
3. ./sign_embed <hdr_file> <sign_file> (Embed the signature at the end of header file)

6.1.4 Procedure to enable secure boot

This topic lists the steps to enable secure boot along with links to the related topics.

Step 1: Build cst tool

To build Code Signing Tool (CST):

```
$ flex-builder -c cst
```

[9] This may be done by user's own tool in case he does not want to share the private key with the CST tool.

Step 2: Generate keys in cst folder

For steps to generate keys, see Key generation

Step 3: Generate LSDK composite secure boot firmware

LSDK composite firmware consists of RCW/PBL, ATF, Bootloader(U-Boot or UEFI), secure headers, Ethernet MAC/PHY firmware, dtb, kernel and tiny initrd RFS. The composite firmware can be programmed at offset 0x0 in flash device or at offset block# 8 in SD/eMMC card.

To generate LSDK composite secure boot firmware

```
flex-builder -i mkfw -m <machine> -b <boottype> -s
```

`<machine>` can be ls1012ardb, ls1012afrwy, ls1021atwr, ls1028ardb, ls1043ardb, ls1046ardb, ls1046afrwy, ls1088ardb_pb, ls2088ardb, lx2160ardb

`<boottype>` can be nor, sd, emmc, qspi, xspi, nand.

Step 4: Generate fuse provisioning firmware

For steps to build fuse provisioning firmware, see Build fuse provisioning firmware image

Step 5: Program fuse provisioning firmware on board

For steps to program fuse provisioning firmware on a board, see Deploy firmware image on board

Step 6: Boot board with secure firmware

For steps to boot the board with secure firmware and check if fuse provisioning is successful, see Run firmware image on board

6.1.5 Procedure to run secure boot

This section describes the steps to be followed to run secure boot on a platform, after building the images.

6.1.5.1 Prepare board for Secure Boot

Steps to blow fuses (at minimum the OTPMK must be provisioned):

1. Enable POVDD
    a. LS1021A TWR Board
        - To enable SNVS in check state – J 11
        - POVDD (J8 and J9)
    b. LS1043A RDB Board
        - Put J13 to enable PWR_PROG_SFP
    c. LS1012A RDB
        - Through I2C transactions, write to LDO1CT register to change LDO1EN bit in vr5100
        - i2c mw 0x08 0x6c 0x10
    d. LS1012 AFRWY
        - J37 to enable PROG_SFP
        - Through I2C transactions, write to LDO1CT register to change LDO1EN bit in vr5100
        - i2c mw 0x08 0x6c 0x10
    e. LS1046A RDB Board

- Put J21 to enable PWR_PROG_SFP

f. LS2088A RDB Board

- Put J12 to enable PWR_PROG_SFP

g. LS1088A RDB Board

- Put J10 to enable PWR_PROG_SFP.

h. LX2160A RDB platform

- Put J9 to enable PROG_SFP

2. Write the required values to be fused in the corresponding SFP Registers. Please see the 'Trust Architecture User Guide' for details on the SFP.
3. Write SFP_INGR[INST] with the PROGFB(0x2) instruction to blow the fuses.

Example for blowing the OTPMK fuses

The following example shows typical steps using U-Boot and host side commands to provision the OTPMK. These steps need to be adapted to the SoC used

- Check initial SNVS state

```
md 0x1e90014
88000900
```

The second nibble indicates that the OTPMK is not blown

- Enable POVDD
- Command to generate OTPMK

```
cd cst
./gen_otpmk_drbg -b 2
```

NOTE

For more information on gen_otpmk_drbg, see Code Signing Tool section in Secure Boot User Guide.

- Write OTPMK fuse values on shadow registers:

```
mw.l 1e80234 <OTPMK1>
mw.l 1e80238 <OTPMK2>
mw.l 1e8023c <OTPMK3>
mw.l 1e80240 <OTPMK4>
mw.l 1e80244 <OTPMK5>
mw.l 1e80248 <OTPMK6>
mw.l 1e8024c <OTPMK7>
mw.l 1e80250 <OTPMK8>
```

- Check SNVS state again. There should be no parity errors.

```
md 1e90014
    80 000 900
```

Now you can see '0' in second nibble.

```
md 1e80024
    00000000
```

No parity errors.

Use the below command write to INGR register :

For LS1, LS1043 and LS1046 use :

```
mw 1e80020 0x02000000
```

For LS1088, LS2088, and LX2160 use the below command:

```
mw 1e80020 0x2
```

- Reset and check that SNVS is in Check state

```
md 1e90014
    80 000 900
```

6.1.5.2 Running secure boot on target platforms

6.1.5.2.1 Program SRKH mirror registers in CodeWarrior environment

To successfully execute any of the sequences described below it is important to reconfigure the target boards first so that a reset request from the SoC (HRESET_REQ) will not automatically result in an SoC reset triggered by board logic like a CPLD. The NXP reference boards have jumpers or DIP switches to disable the automatic HRESET_REQ handling and can put the board into a Reset Sequence Pause (RSP). While some examples are given, more details can be found in the board specific documentation on how to enable RSP behavior.

1. **Platforms LS1021, LS1043, LS1046**
    a. After copying images to flash, select the boot source by changing the switch settings, then boot the board.
    b. In platforms LS1021, LS1043, LS1046 flexbuild generated rcw for secure boot has the boot core put in holdoff by setting BOOT_HO = 1 and enabled secure boot by SB_EN=1 (auto set when build with '-s' option in flexbuild).

    After booting the board, core would get stuck at its first instruction. This is done to allow the user to write SRKH in the register. When using pre-built images, use the SRK hash present in srk_hash.txt from github. If SRKH fuse is already blown, then set BOOT_HO = 0 in rcw file in flexbuild, else write the SRK hash value (displayed while signing images) in SFP mirror registers and then release the core out of Boot Hold off by writing to Boot Release Register in DCFG using the below commands:

```
ccs::config_server 0 10000
ccs::config_chain {<platform> dap sap2}
display ccs::get_config_chain
#Check Initial SNVS State and Value in SCRATCH Registers
ccs::display_mem <dap position> 0x1e90014 4 0 4
ccs::display_mem <dap position> 0x1ee0200 4 0 4
#Wrie the SRK Hash Value in Mirror Registers
ccs::write_mem <dap position> 0x1e80254 4 0 <SRKH1>
ccs::write_mem <dap position> 0x1e80258 4 0 <SRKH2>
ccs::write_mem <dap position> 0x1e8025c 4 0 <SRKH3>
ccs::write_mem <dap position> 0x1e80260 4 0 <SRKH4>
ccs::write_mem <dap position> 0x1e80264 4 0 <SRKH5>
ccs::write_mem <dap position> 0x1e80268 4 0 <SRKH6>
ccs::write_mem <dap position> 0x1e8026c 4 0 <SRKH7>
ccs::write_mem <dap position> 0x1e80270 4 0 <SRKH8>
#Get the Core Out of Boot Hold-Off
ccs::write_mem <dap position> 0x1ee00e4 4 0 0x00000001
```

NOTE

- Platform in the above commands to be used are ls1043a for ls1043, ls1046 and ls1012.
- LS1021ATWR board use config command as ccs::config_chain {ls1020a dap {8 1} }

2. **Platforms LS1088, LS2088**

   In these platforms key hash is written into registers by putting the core into RSP, after this, connect to the board and blow SRKH using CCS. When using pre-built images, use the SRK hash present in srk_hash.txt from github.

   If running in production environment (See the note below for more information), i.e if the SRKH fuses are already blown, then no need to put the SoC into RSP, just change the bank/boot-source and boot, else follow the steps below:

   a. **Steps to put SOC in RSP (Reset Sequence Pause)**

      i. LS2088:

      - Rev1 RDB Board Switch (Rev B): SW3.8 – 0. Switch (Rev C to Rev F): SW4.8 – 0. To boot from vbank4, change SW9[3:5] to 100.

      ii. LS1088:

      - U-Boot Command to put SOC in RSP

```
sd secure boot:   i2c mw 66 60 20;i2c mw 66 66 7f;i2c mw 66 10 10;i2c mw 66 10 21
qspi secureboot : i2c mw 66 50 20 ;i2c mw 66 66 7f;i2c mw 66 10 20;i2c mw 66 10 21
```

   b. After putting the SoC into RSP, reset the board. Then use the below commands to write SRKHR in the register.

```
ccs::config_chain {<platform> sap2}
display ccs::get_config_chain
puts "Entry RSP: "
ccs::write_mem 2 0x7 0x001000D0 0x4 0x0 0x800
set ::littleendian(2) 1
ccs::write_mem <sap position> 0x1e80254 4 0 <SRKH1>
ccs::write_mem <sap position> 0x1e80258 4 0 <SRKH2>
ccs::write_mem <sap position> 0x1e8025c 4 0 <SRKH3>
ccs::write_mem <sap position> 0x1e80260 4 0 <SRKH4>
ccs::write_mem <sap position> 0x1e80264 4 0 <SRKH5>
ccs::write_mem <sap position> 0x1e80268 4 0 <SRKH6>
ccs::write_mem <sap position> 0x1e8026c 4 0 <SRKH7>
ccs::write_mem <sap position> 0x1e80270 4 0 <SRKH8>

set ::littleendian(2) 0
puts "Exiting RSP: "
ccs::write_mem 2 0x7 0x001000D0 0x4 0x0 0x400
```

   Note: Board needs to be reset only when RSP is enabled using switch configurations.

3. **Platform LX2160A**

   Below are the steps to put the LX2160 in RSP and write SRKH in SFP mirror registers:

```
ccs::config_chain {lx2160a dap}
jtag::lock
#To Read the Content of TPINSVSR SEL (TPINSVSR) register
jtag::scan_io 0 8 0x92
jtag::scan_io 1 64 0x0  # this will give the content of the register as output
# To write to TAP Configuration Pin Override Control Register (TCPOVCR)
jtag::scan_io 0 8 0x93
##Setting the override bit (bit 0) to 1 and the RSP enable bit (bit 42) to 0.

#Bits 1-9 signifies RCW source. So, change the below command accordingly.
```

```
##Note : Read the value first using command "jtag::scan_io 0 8 0x92" and then set
 # the mentioned above bits with their corresponding value, keeping other  bit values
 # same.

jtag::scan_io 1 64 0x00000103713F001F     # in case of FlexSPI NOR for LX2160ARDB
        #Or
jtag::scan_io 1 64 0x0000010271000011     # in case of RCW SRC as SD (ESDHC1)for LX2160

jtag::unlock
After executing the above steps, do POR , and then run the following commands

ccs::config_chain {lx2160a sap2}
display ccs::get_config_chain
ccs::stop_core 1  # Coreindex of Cortex-A5 to be used.
ccs::write_mem 1 0x1E80254 4 0 <SRKH1>
ccs::write_mem 1 0x1E80258 4 0 <SRKH2>
ccs::write_mem 1 0x1E8025c 4 0 <SRKH3>
ccs::write_mem 1 0x1E80260 4 0 <SRKH4>
ccs::write_mem 1 0x1E80264 4 0 <SRKH5>
ccs::write_mem 1 0x1E80268 4 0 <SRKH6>
ccs::write_mem 1 0x1E8026c 4 0 <SRKH7>
ccs::write_mem 1 0x1E80270 4 0 <SRKH8>
# To get the board out of RSP
ccs::write_mem 1 0x101000D0 0x4 0x0 0x000c0000
ccs::run_core 1
```

4. **Platform LS1028A**

   Below are the steps to put the LS1028A in RSP and write SRKH in SFP mirror registers:

```
ccs::config_chain {ls1028a dap};
display ccs::get_config_chain;

ccs::config_chain testcore;
jtag::lock;
jtag::state_move test_logic_reset;
jtag::scan_out ir 4 3;
jtag::scan_out dr 6 1;
jtag::scan_io ir 8 0x93;
jtag::scan_io dr 64 0x0;
jtag::scan_io ir 8 0x92;
jtag::scan_io dr 64 0x0;
jtag::set_pin 0 0;
after 100;
puts [jtag::scan_io ir 8 0x93];
puts [jtag::scan_io dr 64 0x0000010071FF001F]; // For FlexSPI boot
jtag::set_pin 0 1;
jtag::unlock;

ccs::config_chain {ls1028a dap};
display ccs::get_config_chain;

ccs::write_mem 2 0x7 0x001000D0 4 0 0x00080000
ccs::stop_core 1  #Coreindex of Cortex-A5 to be used.
ccs::write_mem 1 0x1E80254 4 0 SRKH 1;
ccs::write_mem 1 0x1E80258 4 0 SRKH 2;
ccs::write_mem 1 0x1E8025c 4 0 SRKH 3;
ccs::write_mem 1 0x1E80260 4 0 SRKH 4;
ccs::write_mem 1 0x1E80264 4 0 SRKH 5;
```

```
ccs::write_mem 1 0x1E80268 4 0 SRKH 6;
ccs::write_mem 1 0x1E8026c 4 0 SRKH 7;
ccs::write_mem 1 0x1E80270 4 0 SRKH 8;
ccs::run_core 1;
ccs::write_mem 2 0x7 0x001000D0 4 0 0x00040000;
```

After implementing all the steps, the board will boot and user will get the Linux prompt after **successful validation** of all the images.

NOTE

- Platform in the above commands to be used are: ls2085a for ls2088 and ls1080a for ls1088.
- To blow SRKH in production environment follow procedure similar to blowing OTPMK fuses. For more detail on production and development environment refer Flow A and Flow B under Product Execution section in Secure Boot User Guide

6.1.5.2.2 Program SRKH mirror registers in U-Boot environment

When using pre-built images, use the SRK hash present in srk_hash.txt from github.

NOTE

CST generates the SRKH in the same endianness as SFP. To program the SRKH in an ARM core running little endian mode, a byte swap is required.

Table 58. Sample SRKH values

Offset	Register name	Example value	Endianness swap
01E8_0254	SRKH 0 255-224	5390ad44	44ad9053
01E8_0258	SRKH 1 223-192	c39af1da	daf19ac3
01E8_025C	SRKH 2 191-160	41448739	39874441

Follow these steps to program the fuses:

1. From the U-Boot prompt, use the mm (memory modify) command to modify and md (memory display) command to display the SRKH registers.

   NOTE

   For those of you building a U-Boot script, use the mw (memory write) command instead of the mm command.

2. Program the SRKH registers:

```
=> mm 0x01E80254
01e80254: 00000000 ? 44ad9053
01e80258: 00000000 ? daf19ac3
01e8025c: 00000000 ? 39874441
01e80260: 00000000 ? 84f92796
01e80264: 00000000 ? 52aa607f
01e80268: 00000000 ? 145d67a3
01e8026c: 00000000 ? 603404c6
01e80270: 00000000 ? 9f0e972b
01e80274: 00000000 ? .
```

3. Display and verify that the SRKH registers were programmed in the previous step.

```
=> md 0x01E80234
01e80234: 00000000 00000000 00000000 00000000 ................
01e80244: 00000000 00000000 00000000 00000000 ................
01e80254: 44ad9053 daf19ac3 39874441 84f92796 .=J$.\6..?...%_.
```

```
01e80264: 52aa607f 145d67a3 603404c6 9f0e972b .....t....O\....
01e80274: 00000000 00000000 00000000 00000000 ................
01e80284: 00000000 00000000 00000000 00000000 ................
```

If you make a mistake, you can re-execute the U-Boot mm command up until the time when you write the program bit. Make sure that the value is correct. Be aware, as soon as you issue the program fuse block command, you cannot modify or reset the SRKH registers.

6.1.5.3 Steps to run chain of trust with confidentiality

1. Generate all images

```
$ flex-builder -c firmware
$ flex-builder -c linux -a <arch>
```

2. Generate autoboot script with e flag:
   a. With encapsulation flag enabled

```
$ flex-builder -i mkdistroscr -e
```

   or

   b. With encapsulation and key identifier (16 bytes)

```
$ flex-builder -i mkdistroscr -e -k <key_id>
 Eg. Key_id = 0x20000000
```

> **NOTE**
> For more information on key identifier, see section Chain of Trust with confidentiality.

3. Signing all images

```
$ flex-builder -i signimg -m <platform> -b <boottype> -s -e
```

4. Generating firmware image

```
$  flex-builder -i mkfw -m <platform> -b <boottype > -s
```

5. Generating bootpartition

```
$ flex-builder -i mkbootpartition -a <arch> -s
```

6. Writing image to SD card

```
$ flex-installer -b build/images/bootpartition_LS_<arch>_lts_<version>.tgz -r build/rfs/
rootfs_lsdk_<version>_LS_<arch> -f build/images/firmware_<arch>_uboot_sdboot_secure.img -d /dev/
mmcblk0-d /dev/sdx
```

First Boot: Encapsulation step (Should happen in OEM's premises)

1. By default, the encap and decap bootscripts are installed in the bootpartition.
2. When the board boots up for the first time after all images have been generated, Encap bootscript will execute. This bootscript:
   a. authenticates and encapsulates linux and dtb images and replaces the unencrypted linux and dtb images with newly encapsulated linux and dtb.

b. replaces the encap bootscript and header with the decap bootscript and it's header, already present in the bootpartition.

c. issues reset.

Subsequent Boot

1. U-Boot would execute script with decap commands.
   a. Un-blobify linux and dtb image in DDR.
   b. Pass control to these images.

NOTE

Chain of trust with confidentiality is not supported for LS1012A in flexbuild.

6.2 IMA-EVM on LS Trust Architecture SoCs

6.2.1 Introduction

Layerscape trust architecture supports image validation using secure boot feature. Secure boot performs image validation in various stages and kernel image is the last one to get verified in chain of trust. Linux-based IMA-EVM feature helps in extending the chain of trust (COT) until rootfs installed over persistent storage devices.

Integrity Measurement Architecture (IMA): is the linux integrity subsystem used to detect if files have been accidentally or maliciously altered. It appraises a file's measurement against a "good" value stored as an extended attribute (security.ima) and enforces local file integrity checks. The extended attribute (security.ima) of a file is the hash value (SHA-1, SHA-256 or SHA-512) of its content. IMA maintains a list of hash values over all executables and other sensitive system files loaded at runtime into the system.

Extended Verification Module (EVM): protects a file’s extended attributes against integrity attacks. The extended security attribute (security.evm) stores the HMAC value over other extended attributes associated with the file such as security.selinux, security.SMACK64, security.ima.

EVM depends on the kernel key retention system and requires an encrypted key named evm-key for the HMAC operation. The key is loaded onto the root user keyring using keyctl utility. EVM is enabled by setting an enable flag in securityfs/evm file.

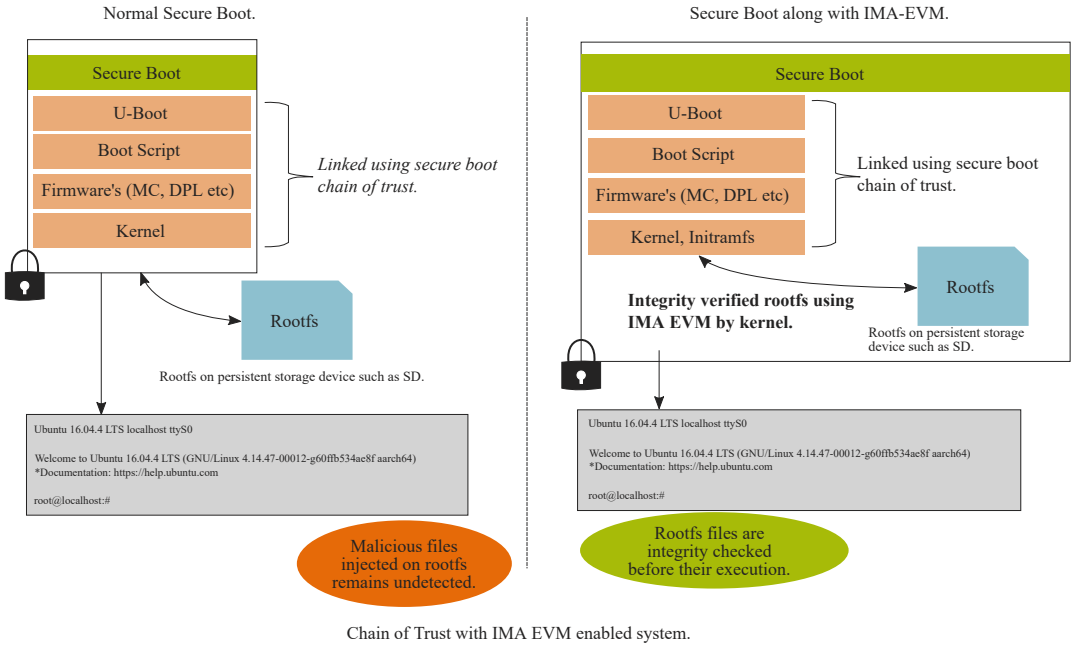

Figure 29. Chain of Trust with IMA EVM enabled system

In normal secure boot process, contents of root file system mounted over persistent storage device are not validated by any mechanism and hence cannot be trusted. Any malicious changes in non-trusted rootfs contents are undetected. IMA EVM is the linux standard mechanism to verify the integrity of the rootfs. Integrity checks over file attributes and its contents are performed by linux IMA EVM module before its execution. IMA EVM depends on encrypted key loaded on user's keyring. Loading keys to root user keyring and enabling EVM is typically done using initramfs image. The initramfs image is validated using secure boot process and becomes the part of chain of trust. Initramfs switches control to main rootfs mounted over storage device, after EVM is successfully enabled on the system.

For secure boot process see Secure boot process.

6.2.2 Secure key and its blob

Secure key is generated using CAAM security engine which constitutes of random bytes. The key contents are stored in kernel space and not visible to user. User space will only be able to see the key blob.

Blobs are special data structures for holding encrypted data, along with an encrypted version of the key used to decrypt the data. Typically, blobs are used to hold data to be stored in external storage (such as flash memory or in an external file system), making the contents of a blob a semi-persistent secret. The secrecy of the blob depends on the device-specific 256-bit master key, which is derived from the OTMPK or ZMK on Layerscape trust architecture-based SoCs.

Secure key is loaded on the user keyring by the kernel keys framework and its blob is stored on the rootfs to be used during next bootup.

6.2.3 EVM Key on user keyrings

The EVM security attribute depends on an encrypted key (named evm-key) loaded on the user keyring. The encrypted key is derived by the kernel using the master key. The master key can be of following types:

- User-Key
- Secure-Key

- Trusted-Key

Secure and trusted keys are derived using a hardware security engine for greater security while the security of user-key depends upon the user-defined mechanisms irrespective of the hardware. The secure-key is derived using the Layerscape's SEC (aka CAAM). The trusted-key can be used on the platforms supporting TPM.

The encrypted key acts as an HMAC key, which is subsequently used to calculate the HMAC value (security.evm) over other security attributes. This key is stored internally by the kernel and user can only see its blob.

6.2.4 Enabling secure key and encrypted key in kernel config

The secure key is dependent on the Layerscape SoCs SEC (also known as: CAAM) hardware. To enable the secure key following SEC related configs needs to be enabled under **Hardware crypto devices** config option. See below spcified hierarchy for the config options:

```
Cryptographic API
 |____Hardware crypto devices
     |______ Freescale CAAM-Multicore platform driver backend
     |______ Freescale CAAM Job Ring driver backend
     |______ Register algorithm implementation with Crypto API
     |______ Queue Interface as Crypto API backend
     |______ Register hash algorithm implementations with Crypto API
     |______ Register CAAM device for hwrng API
```

After configuring basic CAAM options, enable the secure key and the encrypted key under Security options.

```
Security options
    |________ SECURE_KEYS
    |________ ENCRYPTED_KEYS
```

NOTE

1. To enable any option press Y.
2. If any option is enabled by default, there is no need to press Y.

6.2.5 Enabling IMA EVM integrity options in kernel image

Enable IMA EVM integrity options under Security options as shown below:

```
Security options
    |________ Integrity subsystem
    |________ Enables integrity auditing support
    |________ Integrity Measurement architecture (IMA)
    |________ Appraise integrity measurements
    |________ EVM support
    |________ FSUUID (version 2)
```

6.2.6 Modes of operation in IMA EVM

IMA EVM is enabled in two modes: fix mode, enforce mode. To enable a system with IMA EVM, both modes must be implemented in a sequence as described below.

1. First, the system needs to be booted in fix mode with ima_appraise=fix and evm=fix bootargs. After loading the keys on the root keyring, the entire file system is labelled with security attributes. In fix mode any file with INTEGRITY_UNKNOWN is labelled with proper attribute values. This mode must be executed only once while preparing system for field deployment.

2. Second, after the fix mode execution is completed successfully, system needs to be booted IMA EVM in enforce mode. Enforce mode is enabled by setting ima_appraise=enforce bootargs. In enforce mode the files are measured against their “good” values. In case there is a mismatch between calculated security attribute value and stored value, access to that file is denied. While in field the system boot is done in enforce mode only.

6.2.7 IMA EVM feature use cases

IMA EVM prevents system from offline attack

Scenario: If attacker tries to boot the system using the rootfs mounted over persistent storage device for which the files are wrongly labelled or not labelled with security labels (such as security.ima, security.evm).

System behavior: In enforce mode, the IMA EVM labelled kernel stops booting due to mismatch in calculated security attribute values and labelled values.

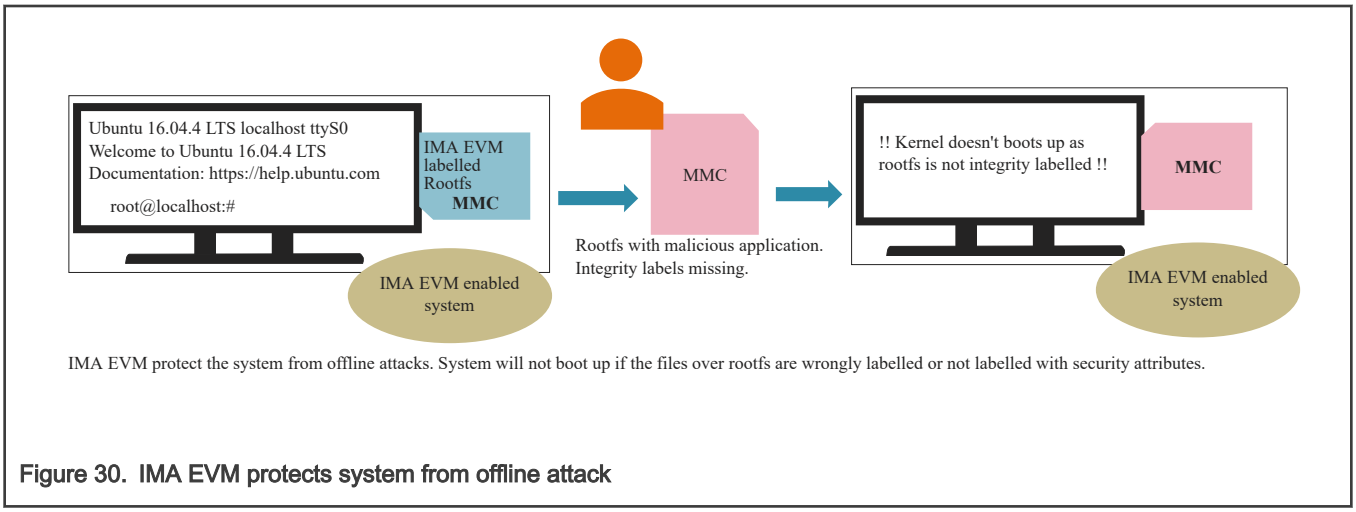

Figure 30. IMA EVM protects system from offline attack

IMA EVM protects system against malicious file changes

Scenario: Any application loaded by the root user is changed maliciously. The labelled attribute values will be different from the calculated values on the next access.

System behavior: On next access, the file will not be accessible due to different security attribute values.

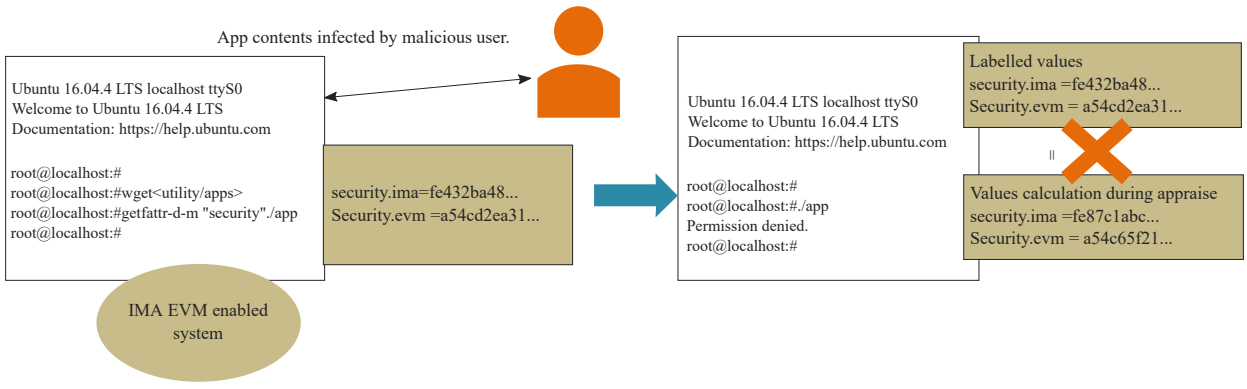

Figure 31. IMA EVM protect system from malicious file changes

NOTE

IMA EVM is independent of rootfs version i.e. it works with LSDK rootfs 16.04 as well as LSDK rootfs 18.04

6.2.8 Appendix A: Steps to enable IMA EVM using flex builder

To boot the SoC with the IMA EVM feature, various boot images can be generated using flex build. Secure boot process is mandatory to run the images generated using flex build.

Steps to generate images for IMA EVM along with secure boot:

1. Execute the commands below to enable configuration options for secure key and IMA-EVM feature in kernel as specified in Enabling secure key and encrypted key in kernel config and Enabling IMA EVM integrity options in kernel image respectively.

```
$ flex-builder -c linux:custom -a <architecture>
$ flex-builder -c linux -a <architecture>
```

2. Prepare initramfs images for arm32 or arm 64 architecture.

```
$ flex-builder -i mkrfs -r buildroot:imaevm -a <architecture>
```

3. Prepare distro boot script images for the desired platform,

```
$ flex-builder -i mkdistroscr -t
```

4. Sign the images (initramfs image, boot scripts and others) for secure boot process.

```
$ flex-builder -i signimg -m <platform> -b <boottype> -t
```

5. Create the firmware image to be used:

```
$ flex-builder -i mkfw -m <platform> -b <boottype> -t
```

6. Build the boot partition tar ball:

```
$ flex-builder -i mkbootpartition -m <platform> -a <architecture> -t
```

7. Use the flex installer to program the boot partition and rootfs on the storage device.
8. System can be booted to run in secure mode.
9. On first boot up system will run IMA EVM in fix mode, during this mode the boot script in boot partition will be replaced with the enforce mode boot script. Upon first successful boot up reboot the system. Now on every bootup system will run in enforce mode.

NOTE

- Platform to be used: LS1012ARDB, LS1012AFRWY, LS1021ATWR, LS1028ARDB, LS1046ARDB, LS1043ARDB, LS1046AFRWY, LS1088ARDB, LS2088ARDB, and LX2160ARDB.

  (LS2088ARDB Rev F does not support SD card.)
- Architecture to be used is: ARM32 or ARM64
- Boot type to be used is: qspi, sd, etc.
- -t flag is specified to indicate trust using IMA EVM.

6.2.9 Appendix B: Standalone steps to enable IMA EVM

To boot the system with IMA EVM, follow the steps below:

1. Clone the kernel (dash-lts) repository and checkout to the latest tag.
2. To compile the kernel set arch and path for cross-compilation:

```
$: export CROSS_COMPILE=<aarch64-toolchain>
$: export ARCH=arm64
```

3. Make the default config:

```
$: make defconfig lsdk.config
```

NOTE

Above command is for ARM64 platform, use the necesaary defconfigs required to build the default config.

4. Enable the config options for secure key and IMA-EVM feature in kernel as mentioned in Enabling secure key and encrypted key in kernel config and Enabling IMA EVM integrity options in kernel image respectively.
5. Build the kernel image using make command:

```
$:make -j<no. of jobs>
```

6. Prepare the SD card, ext4 type partition (say mmcblk0p3) with LSDK rootfs image extracted over it.
7. Boot the board to U-Boot prompt.
8. Prepare the initramfs for specific architecture using flex build as mentioned in step 2 at Appendix A: Steps to enable IMA EVM using flex builder.
9. Using tftp or by some other means, place the initramfs image on DDR (say at location 0xa0000000).
10. Enable the IMA EVM in fix mode by adding the following boot arguments to present bootargs.

    rootwait ima_tcb ima_appraise=fix ima_appraise_tcb evm=fix enforcing=0

```
$: setenv bootargs=” console=ttyS0,115200 root=/dev/mmcblk0p3 rw rootwait ima_tcb
ima_appraise=fix ima_appraise_tcb evm=fix enforcing=0
```

NOTE

a. The default mount partition is 3rd partition over mmc device (mmcblk0p3).

b. Set the mount option accordingly if ROOTFS is not mounted on mmcblk0p3 partition e.g. mount="usb or sata or mmcblkpX"

c. This step to be executed only once while preparing the board in factory for field deployment.

11. Run bootm command:

```
$: bootm <uImage_addr> <initramfs_img_addr> <platform_dtb_img_addr>
```

12. Once the system gets booted up, immediately perform reboot. This ensure the system is ready to be used in enforce mode.
13. To start with enforce mode, boot the system to U-Boot Prompt and repeat the steps 10 and 11.
14. Enable the IMA EVM in enforce mode by adding the following boot arguments to present bootargs.

    “ rootwait ima_tcb ima_appraise=enforce ima_appraise_tcb enforcing=1 ”

```
$: setenv bootargs="console=ttyS0,115200 root=/dev/mmcblk0p3 rw rootwait
ima_tcb ima_appraise=enforce ima_appraise_tcb enforcing=1
```

NOTE

- The default mount partition is 3rd partition over mmc device (mmcblk0p3).
- Set the mount option accordingly if ROOTFS is not mounted on mmcblk0p3 partition e.g. mount="usb or sata or mmcblkpX"

15. Run bootm command

```
$: bootm <uImage_addr> <initramfs_img_addr> <platform_dtb_img_addr>
```

16. System is booted up in enforce mode and ready with IMA EVM feature.

NOTE

Bootargs as mentioned in step 10 and 14 can be set using the boot script along with the secure boot chain.

6.2.10 Appendix C: Steps to verify IMA EVM feature

Perform the following checks to ensure that IMA EVM is successfully enabled in enforce mode.

1. Secure keys and encrypted keys are enabled in kernel image: The Following kernel logs ensures that secure key and encrypted key is successful registered.

```
[    3.887255] Key type secure registered
[    3.892526] Key type encrypted registered
```

2. IMA EVM is enabled in kernel image. The following kernel logs ensures IMA EVM is enabled.

```
[    3.896537] ima: No TPM chip found, activating TPM-bypass! (rc=-19)
[    3.902804] ima: Allocated hash algorithm: sha256
[    3.907542] evm: HMAC attrs: 0x1
```

3. System is up in enforce mode. The following logs from initramfs and kernel ensures enforce mode is enabled.

```
[   31.945199] EXT4-fs (mmcblk0p3): mounted filesystem with ordered data mode. Opts: (null)
Loading blobs
[   31.965094] evm: key initialized
```

4. EVM attributes over a file can be checked using getfattr utility.

```
root@localhost# getfattr -d -m “security” /path/to/file
```

5. Security attribute are appraised successfully upon changing any file contents. Below steps will verify the appraise functionality.

```
root@localhost# vim test_file  // wrtite contents "abc"
root@localhost# getfattr -d -m “security” /path/to/test_file
root@localhost# vim test_file  // write contents "abcd"
root@localhost# getfattr -d -m “security” /path/to/test_file
```

NOTE

Security attributes values fetched in step d will be different from `root@localhost# getfattr -d -m “security” /path/to/file`.

6.2.11 Appendix - D: Points to remember

When preparing a system in fix mode, if labelling of the file system is interrupted (perhaps due to system power failure), remount the rootfs over the SD card partition before running fix mode again.

.

6.3 Trusted Execution (OP-TEE)

6.3.1 Introduction

Trusted Execution Environment (TEE), for Arm-based chips supporting TrustZone technology.

NXP Platforms are enabled with Open Portable TEE (OP-TEE), which is an open source project which contains a full implementation to make up a complete Trusted Execution Environment. This component meets the Global Platform TEE System Architecture specification. It also provides the TEE Internal core API v1.1 as defined by the Global Platform TEE Standard for the development of Trusted Applications.

OP-TEE consists of three components.

- OP-TEE Client, which is the client API running in normal world user space.
- OP-TEE Linux Kernel driver, which is the driver that handles the communication between normal world user space and secure world.
- OP-TEE Trusted OS, which is the Trusted OS running in secure world.

OP-TEE OS is made of 2 main components: the OP-TEE core and a collection of libraries designed for being used by Trusted Applications. While OP-TEE core executes in the Arm CPU privileged level (also referred to as 'kernel land'), the Trusted Applications execute in the non-privileged level (also referred to as the 'userland'). The static libraries provided by the OP-TEE OS enable Trusted Applications to call secure services executing at a more privileged level.

6.3.1.1 Support platform

OP-TEE is supported on following NXP boards:

- LS1046A-RDB
- LS1043A-RDB
- LS2088A-RDB
- LS1088A-RDB
- LS1012A-RDB

- LS1012A-FRWY
- LX2160A-RDB
- LS1028A-RDB

6.3.1.2 Test Sequence

Execute the test sequence specified below on target machine:

On the target NXP board:

- To check if the OP-TEE kernel driver is successfully initialized (after successfully communicating with OP-TEE OS running in OP-TEE), look for the following in Linux boot logs:

```
optee: probing for conduit method from DT.
optee: initialized driver
```

Note: TF-A FIP image must be compiled with OP-TEE binary.

```
 node. Else, an error appears : optee: api uid mismatch
```

- Now, run the tee-supplicant (binary generated from optee_client repo) binary

```
$>: tee-supplicant & (press enter).
```

- Run the **xtest**(binary generated from optee_test repo) app as follows:

```
    $>: xtest -l 15 (press enter and look for the below logs to verify app runs successfully):
             47123 subtests of which 0 failed
             79 test cases of which 0 failed
             0 test case was skipped
             OP-TEE test application done!
```

NOTE

OP-TEE is not enabled by default in flex-builder. To enable flex-builder, set `CFG_APP_OPTEE=y` in `configs/build_lsdk.cfg`

6.4 Fuse Provisioning User Guide

6.4.1 Introduction

NXP SoC's Trust Architecture provides non-volatile secure storage in form of on-chip fuse memory. Following information can be programmed into fuse memory via Security Fuse Processor (SFP):

- One Time Programmable Master Key Registers (OTPMKRs)
- Super Root Key Hash Registers (SRKHRs)
- Debug Challenge and Response Value Registers (DCVRs & DRVRs)
- OEM Security Policy Registers (OSPRs)
- OEM Unique ID/Scratch Pad Registers (OUIDRs)

6.4.2 Fuse Programming Scenarios

Phase		NXP Fuses	OEM Fuses	Software
NXP Manufacturing		FUID, FSV, CSFF, WP (+ On Trust 3.0, DPL) Can set RT & RDPL up to 4x before shipping part)		Fuse programming done on tester, no software involved
OEM Manufacturing (Can be split into two stages if required)	Ship to contract manufacturer			
	Minimal Fuse Provisioning		SRKH, DP, CSFF, ITS Minimal OTPMK & Optional OEM, DRV UIDs, DCV	Fuse Provisioning Tool Doesn't need to pass secure boot to execute, but must set up the system so that the next boot passes secure boot.
	At contract manufacturer or in the field			
	Final Fuse Provisioning		Final OTPMK & DRV, WP Optional OEM UIDs, DCV	Fuse Provisioning Tool pass secure boot.
In field, later in lifecycle				
Lifecycle fuse update			Key Revocation, Monotonic Counter Era, OEM Scratchpad, Field Return	Currently no software utility available. Can be done by custom app.

6.4.2.1 Fuse Provisioning during OEM Manufacturing

This stage may be split into two stages:

Stage 1 (Non-secure boot) – Minimal Fuse Provisioning

The following few fuses (Minimal Fuse File) programmed for secure boot to run:

- SRKH
- DP
- CSFF
- Minimal OTPMK
- ITS.

This stage does not pass secure boot to execute, but must set up the system so that the next boot passes secure boot. If this step happens in a trusted environment, OEM can choose to blow all the fuses in this stage itself.

Stage 2 (Secure Boot) – Final Fuse Provisioning

Rest of the fuses can be programmed after secure boot is up and running. This step ends with OEM WP fuse getting blown which renders most of the fuses as un- writable.

6.4.3 Fuse Provisioning Utility

Secure firmware provides support to do the fuse provisioning. By default, the support is enabled and requires a built in. Steps to do so using flex build are available in Build fuse provisioning firmware image.

The information about the fuse values to be blown to be provided via a fuse file. The fuse file is a binary file with bits to indicate what fuses to be blown and their corresponding values.

CST provides an input file where user can enter the required values. Tool generates a Fuse file which is parsed in BL2 image to do fuse provisioning.

Secure firmware would have the required checks to determine if the provided input values are correct or not.

For example, OTPMK, SRKH etc. cannot be programmed when OEM_WP is already set in SFP fuses.

6.4.3.1 Fuse file structure

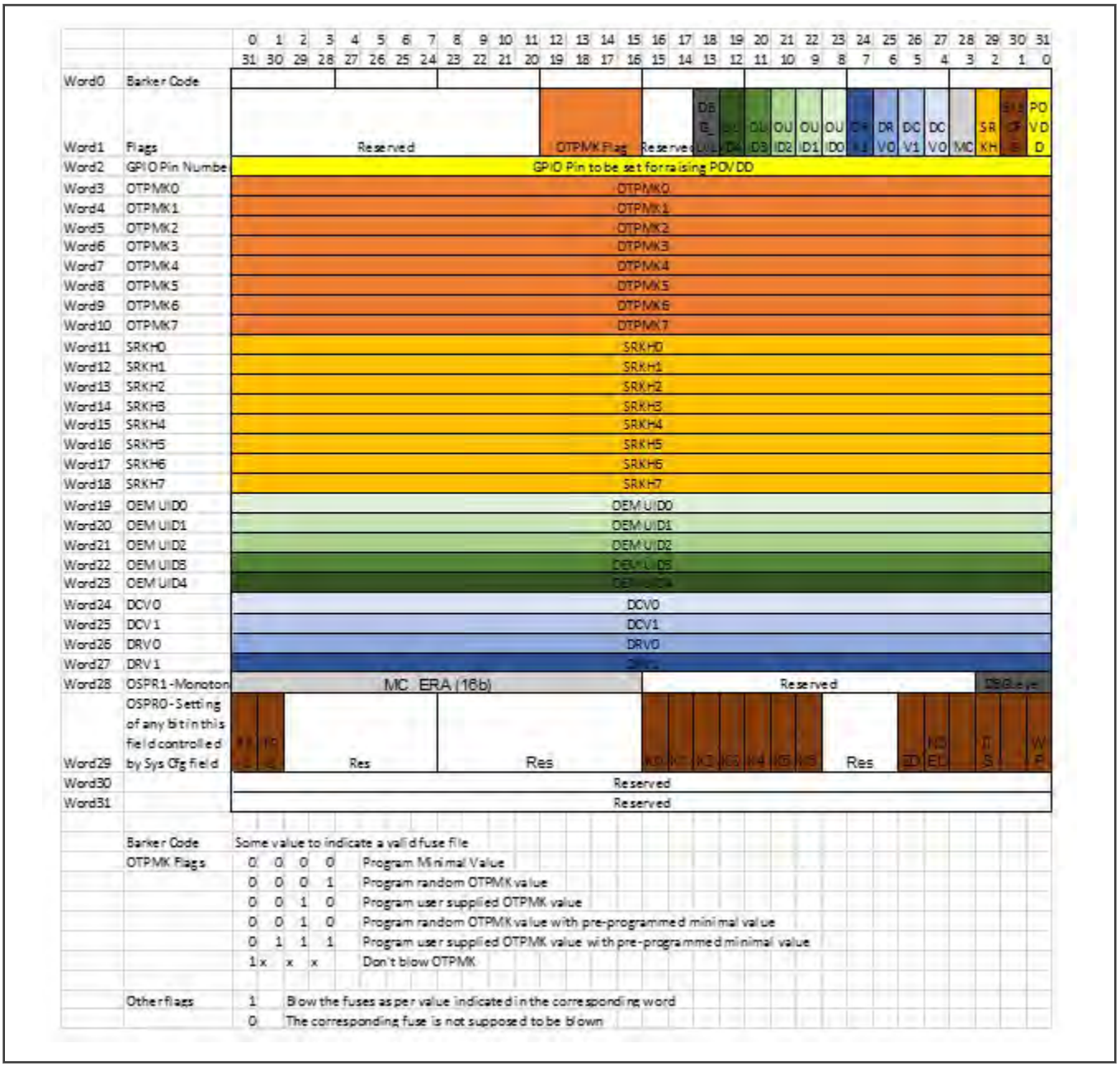

6.4.3.2 Sample input file for fuse provisioning tool

```
-------------------------------------------------
# Specify the platform. [Mandatory]
# Choose Platform - LS1/LS1043/LS1012/LS1046
PLATFORM=LS1046
-------------------------------------------------
# GPIO Pin to be set for raising POVDD [Optional]
POVDD_GPIO=
-------------------------------------------------
# One time programmable master key flags in binary form.[Mandatory]
# 0000 -> Program default minimal OTPMK value
# 0001 -> Program random OTPMK value
```

```
# 0010 -> Program user supplied OTPMK value
# 0101 -> Program random OTPMK value with pre-programmed minimal value
# 0110 -> Program user supplied OTPMK value with pre-programmed minimal value
# 1xxx -> Don't blow OTPMK
OTPMK_FLAGS=0000
# One time programmable master key value.
# [Optional dependent on flags, Mandatory in case OTPMK_FLAGS="0010" or "0110"]
OTPMK_0=
OTPMK_1=
OTPMK_2=
OTPMK_3=
OTPMK_4=
OTPMK_5=
OTPMK_6=
OTPMK_7=
-------------------------------------------------
# Super root key hash [Optional]
SRKH_0=
SRKH_1=
SRKH_2=
SRKH_3=
SRKH_4=
SRKH_5=
SRKH_6=
SRKH_7=
-------------------------------------------------
# Specify OEM UIDs. [Optional]
# e.g OEM_UID_0=11111111
OEM_UID_0=
OEM_UID_1=
OEM_UID_2=
OEM_UID_3=
OEM_UID_4=
-------------------------------------------------
# Specify Debug challenge and response values. [Optional]
# e.g DCV_0=11111111
DCV_0=
DCV_1=
DRV_0=
DRV_1=
-------------------------------------------------
# Specify Debug Level in binary form. [Optional]
# 000 -> Wide open: Debug portals are enabled unconditionally.
# 001 -> Conditionally open via challenge response, without notification.
# 01x -> Conditionally open via challenge response, with notification.
# 1xx -> Closed. All debug portals are disabled.
DBG_LVL=
-------------------------------------------------
# System Configuration register bits in binary form [Optional]
# WP (OEM write protect)
# ITS (Intent to Secure)
# NSEC (Non secure)
# ZD (ZUC Disable)
# K0,K1,K2 (Key revocation bits)
# FR0 (Field return 0)
# FR1 (Field return 1)
WP=
ITS=
NSEC=
ZD=
```

```
K0=
K1=
K2=
FR0=
FR1=
-----------------------------------------------------
# Specify the output fuse provisioning file name. (Default:fuse_scr.bin) [Optional]
OUTPUT_FUSE_FILENAME=fuse_scr.bin
-----------------------------------------------------
```

6.4.4 Build fuse provisioning firmware image

Use following Flexbuild commands to build composite fuse provisioning firmware image. For details about usage of Flexbuild, refer to How to build LSDK with Flexbuild

1. Build Code Signing Tool (CST):

   ```
   $ flex-builder -c cst
   ```

   NOTE

   Before running the following commands, set `CONFIG_FUSE_PROVISIONING=y` in file `flexbuild_<verison>/configs/build_lsdk.cfg` to enable fuse programming.

2. [Optional] Edit input file used for fuse provisioning.

   The input file is available at: `<flexbuild_dir>/packages/apps/cst/input_files/gen_fusescr/<device>/input_fuse_file`

   `<device>` can be `ls2088_1088` or `ls104x_1012`

3. Generate BL31 image (part of fip image) with fuse provisioning support:

   ```
   $ flex-builder -c atf -m <machine> -b <boottype>
   ```

   `<machine>` can be ls1012ardb, ls1012afrwy, ls1021atwr, ls1028ardb, ls1043ardb, ls1046ardb, ls1046afrwy, ls1088ardb_pb, ls2088ardb, lx2160ardb

   `<boottype>` can be nor, sd, emmc, qspi, xspi, nand

4. Generate firmware image for SD boot source:

   ```
   $ flex-builder -i mkfw -m <machine> -b <boottype>
   ```

   `<machine>` can be ls1012ardb, ls1012afrwy, ls1021atwr, ls1028ardb, ls1043ardb, ls1046ardb, ls1046afrwy, ls1088ardb_pb, ls2088ardb, lx2160ardb

   `<boottype>` can be nor, sd, emmc, qspi, xspi, nand

The newly built composite firmware image is available at the following location:

```
flexbuild_<version>/build/images/firmware_<machine>_uboot_<boottype>boot.img
```

`<machine>` can be ls1012ardb, ls1012afrwy, ls1021atwr, ls1028ardb, ls1043ardb, ls1046ardb, ls1046afrwy, ls1088ardb_pb, ls2088ardb, lx2160ardb

`<boottype>` can be nor, sd, emmc, qspi, xspi, nand

6.4.5 Deploy and run fuse provisioning

6.4.5.1 Enable POVDD for SFP

1. LX2160A RDB board
   - Put J9 to enable PWR_PROG_SFP
2. LS2088A RDB Board
   - Put J12 to enable PWR_PROG_SFP
3. LS1088A RDB Board
   - Put J10 to enable PWR_PROG_SFP.
4. LS1046A RDB Board
   - Put J21 to enable PWR_PROG_SFP

For more details to enable POVDD on board, refer to section Prepare board for Secure Boot (point 1 only).

6.4.5.2 Deploy firmware image on board

Program composite firmware image built using Build fuse provisioning firmware image on the required boot medium.

The following example shows commands to flash `firmware_ls1046ardb_uboot_sdboot.img` on the SD card plugged into LS1046ARDB.

```
=> tftp a0000000 firmware_ls1046ardb_uboot_sdboot.img
=> mmc write a0000000 8 1fff8
```

For steps to flash composite firmware on other boards and boot mediums, see board specific LSDK Quick Start Guide.

6.4.5.3 Run firmware image on board

1. Boot the board from required boot medium.

   For example, run the following command to boot LS1046ARDB from SD card.

   ```
   => cpld reset sd
   ```

   For commands to switch to the required boot medium for other boards, see board specific LSDK Quick Start Guide.
2. At the U-Boot prompt, check DCFG scratch 4 register for any Error Codes.

   For example, run the following command for LS1046ARDB to check for error codes.

   ```
   => md 1ee020c 1
   ```

   For addresses for other board, see the device specific SoC Reference Manual.
3. If the `md` command does not show any error, then fuse provisioning is successful.

   ```
   01ee020c: 00000000
   ```

6.4.6 Validation

The procedure specified above is fully validated and verified on LS1046ARDB, LS1088ARDB, and LS2088ARDB platforms.

6.4.7 Error Codes

Table 1: Error Codes

Error Code	Value	Description
ERROR_FUSE_BARKER	0x1	Occurs if fuse script not found.
ERROR_READFB_CMD	0x2	Occurs if SFP Read Fuse Box (READFB) command fails.
ERROR_PROGFB_CMD	0x3	Occurs if SFP Program Fuse Box (PROGFB) command fails.
ERROR_SRKH_ALREADY_BLOWN	0x4	Occurs if SRKH is already blown.
ERROR_SRKH_WRITE	0x5	Occurs if write to SRKH mirror registers fails.
ERROR_OEMUID_ALREADY_BLOWN	0x6	Occurs if OEMUID is already blown.
ERROR_OEMUID_WRITE	0x7	Occurs if write to OEMUID mirror registers fails.
ERROR_DCV_ALREADY_BLOWN	0x8	Occurs if DCV is already blown.
ERROR_DCV_WRITE	0x9	Occurs if write to DCV mirror registers fails.
ERROR_DRV_ALREADY_BLOWN	0xa	Occurs if DRV is already blown.
ERROR_DRV_HAMMING_ERROR	0xb	Occurs if write to DRV mirror registers gives hamming error.
ERROR_OTPMK_ALREADY_BLOWN	0xc	Occurs if OTPMK is already blown.
ERROR_OTPMK_HAMMING_ERROR	0xd	Occurs if write to OTPMK mirror registers gives hamming error.
ERROR_OTPMK_USER_MIN	0xe	Occurs if user supplied OTPMK does not have minimal OTPMK bits set in case where OTPMK flags represents to program user supplied OTPMK value with pre-programmed minimal value.
ERROR_OSPR1_ALREADY_BLOWN	0xf	Occurs if OSPR1 is already blown.
ERROR_OSPR1_WRITE	0x10	Occurs if write to OSPR1 mirror register fails.
ERROR_SC_ALREADY_BLOWN	0x11	Occurs if SysCfg is already blown.
ERROR_SC_WRITE	0x12	Occurs if write to SysCfg mirror register fails.
ERROR_POVDD_GPIO_FAIL	0x13	Occurs if gpio number configured is incorrect.
ERROR_GPIO_SET_FAIL	0x14	Occurs if the gpio bit is not set correctly
ERROR_GPIO_RESET_FAIL	0x15	Occurs if the gpio bit reset is not reset to inital state.

Appendix A Manual steps to build fuse fip image

CST

1. Clone cst from LSDK components.
2. Now make.

```
$:> make
```

3. Default sample input file programs minimal OTPMK values only in fuse memory. Edit "*input_files/gen_fusescr/ls104x_1012/input_fuse_file*" file to select/change values to be programmed in fuses for LS1046 or LS1012. Edit

"*input_files/gen_fusescr/ls2088_1088/input_fuse_file*" file to select/change values to be programmed in fuses for LS1088A and LS2088A.

4. To generate fuse_scr.bin, execute the following command:

```
$:> ./gen_fusescr input_files/gen_fusescr/<platform>/input_fuse_file
platform: ls104x_1012 for LS1046A or LS1012A
platform: ls2088_1088 for LS1088A or LS2088A
```

ATF

1. Clone ATF from LSDK components.
2. Set path for the following:

```
$:> export CROSS_COMPILE=<aarch64-toolchain-path->
```

3. Run the following make command in cloned ATF repository:

```
$:> make realclean; make all fip pbl PLAT=<platform> BOOT_MODE=<boot_mode> RCW=$path/rcw.bin
BL33=$path/uboot.bin fip_fuse FUSE_PROG=1 FUSE_PROV_FILE=$path/fuse_scr.bin
```

NOTE

- <platform> such as ls1046ardb, ls1088ardb, ls2088ardb etc.
- <boot_mode> such as qspi, sd, nor, etc. as per boot mode supported by different platforms.
- Replace $path with the locations of the respective images to be used to build the image.

4. *fuse_fip.bin* will be present at location `./build/release/<platform>/fuse_fip.bin`.

6.5 PKCS#11 and Secure Object Library

6.5.1 Introduction

NXP SoCs such as LS1046A can store keys securely using built-in SoC capabilities - virtual HSM. With such devices, sensitive private keys never leave the device and cryptographic operations are performed on this virtual HSM.

The PKCS#11 is a standard programming interface to communicate with HSMs. This standard specifies an application programming interface (API), called “Cryptoki” to devices which hold cryptographic information and perform cryptographic functions.

Proprietary interfaces using Secure Object Library are provided to interact with the HSM for:

- Generating key pair within the HSM.
- Installing existing key in the HSM.
- Manufacturing Protection key operations. (MPKey)

The private keys are never visible to normal world.

Sensitive Cryptographic operations using these keys can only be done using PKCS#11 cryptographic token standard.

An OpenSSL engine on Secure Object Library is also provided to interface directly with OpenSSL APIs

The PKCS#11 library release is compliant to v2.40. It is targeted for LS1046ARDB and supports

- RSA keys of size 1K and 2K.
- ECDSA keys curve prime256v1 and secp384r1.

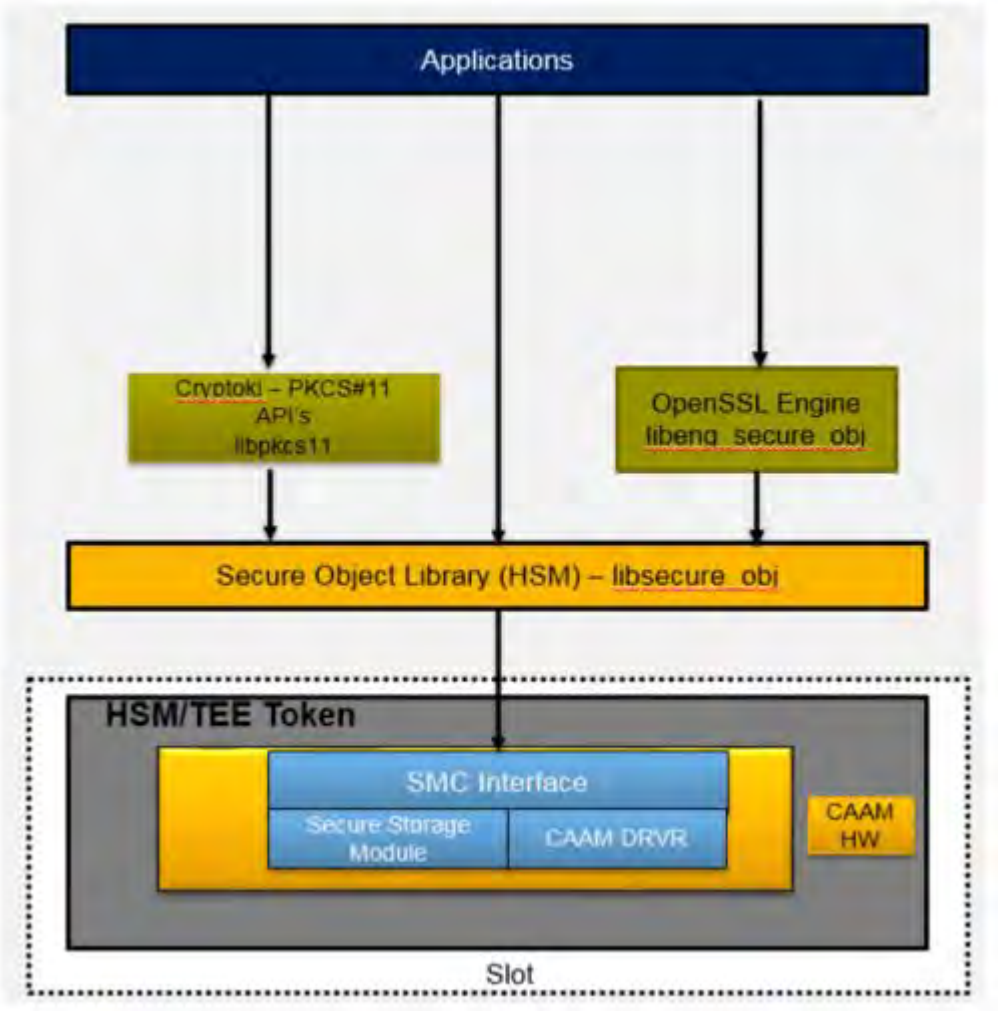

Figure 32. Block Diagram

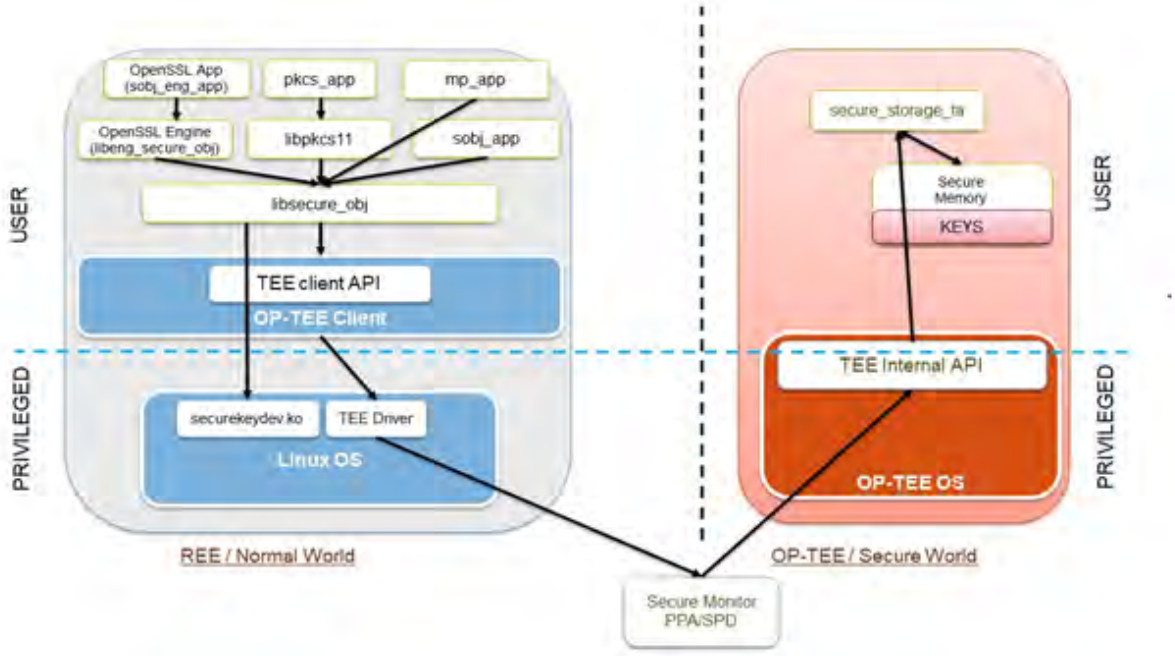

Figure 33. Details of HSM

6.5.2 Supported APIs

6.5.2.1 PKCS#11 Library – libpkcs11.so

The PKCS#11 interfaces are exposed and implemented via a shared library with a name called libpkcs11.so (Cryptoki Library). Any PKCS#11 library has a static CK_FUNCTION_LIST structure, and a pointer to it may be obtained by the C_GetFunctionList() function.

The table below, summarizes the list of supported PKCS#11 interfaces. The return values and API behaviors are compliant with the PKCS#11 standard v2.40. Library expects the caller to use them in a standard way.

API	Description
C_Initialize	Initialize Cryptoki library
C_Finalize	Clean up cryptoki related resources
C_GetFunctionList	Obtains entry points of Cryptoki library functions.
C_GetInfo	Obtains general information about Cryptoki
C_GetSlotInfo	Obtains information about a particular slot
C_GetTokenInfo	Obtains information about a particular token
C_GetSlotList	Obtain list of slots in the system. Only a fixed slot with fixed token is supported. Dynamic slot or token addition is not supported.
C_OpenSession	Opens/Closes a session.

Table continues on the next page...

Table continued from the previous page...

C_CloseSession C_CloseAllSessions	• All types of sessions are supported with Token. • Only Token Objects can be created/destroyed, Session Objects are not supported.
C_Login C_Logout	Logs into a token. Logs out from a token
C_CreateObject	Creates an object (RSA Keys of size up to 2048bits are supported)
C_DestroyObject	Destroys an object
C_FindObjectsInit C_FindObjects C_FindObjectsFinal	Objects search operations. RSA Public and Private key objects of size up to 2048bits are supported. ECDSA Public and Private key objects of size 256 & 384 bits are supported.
C_GetAttributeValue	Obtains the value of one or more attributes of the objects.
C_GetMechanismList	Obtains List of mechanism supported by token.
C_GetMechanismInfo	Obtains the information about a mechanism.
C_GenerateKeyPair	Generates a public-key/private-key pair (RSA Keys of size up to 2048bits are supported)
C_SignInit C_Sign C_SignUpdate C_SignFinal	Initialize a signature operation. Signs single-part data. Continues a multiple-part signature operation. Finishes a multiple-part signature operation. Mechanisms supported: • RSA-based Mechanisms — CKM_RSA_PKCS — CKM_MD5_RSA_PKCS — CKM_SHA1_RSA_PKCS — CKM_SHA256_RSA_PKCS — CKM_SHA384_RSA_PKCS — CKM_SHA512_RSA_PKCS • ECDSA-based Mechanisms (Single Part Only) — CKM_ECDSA — CKM_ECDSA_SHA1
C_DigestInit C_Digest C_DigestUpdate C_DigestFinal	Initializes a message-digesting operation. Digests single-part data. Continues a multiple-part digesting operation. Finishes a multiple-part digesting operation.

Table continues on the next page...

Table continued from the previous page...

	Mechanisms supported: • CKM_MD5 • CKM_SHA1 • CKM_SHA256 • CKM_SHA384 • CKM_SHA512
C_DecryptInit C_Decrypt	Initializes a decryption operation. Decrypts single-part encrypted data. Mechanisms supported: • CKM_RSA_PKCS • CKM_RSA_PKCS_OAEP

6.5.2.2 Secure Object Library – libsecure_obj.so

The following are the details of the supported interfaces to generate/import keys using the Secure Object library.

1. **Import Keys**

   SK_RET_CODE SK_CreateObject(SK_ATTRIBUTE *attr, uint16_t attrCount, SK_OBJECT_HANDLE *phObject);

   The API creates an Object on the HSM, and returns a handle to it. API always succeeds even if an object with same attributes exists in HSM. Duplicate object is created. Application needs to take care that duplicate objects should not be created.

   attr is an array of attributes that the object should be created with. Some of the attributes may be mandatory, such as SK_ATTR_OBJECT_TYPE and SK_ATTR_OBJECT_INDEX (the id of the object), and some are optional.

   Application needs to take care that valid attributes are passed, library does not return any error on receiving inconsistent/ incompatible attributes.

   param[in] attr: The array of attributes to be used in creating the Object.

   param[in] attrCount: The number of attributes in attr

   param[in, out] phObjectIN: A pointer to a handle (must not be NULL);

   OUT: The handle of the created Object

   Return Values:

   SKR_OK Successful execution, phObject filled with created object handle.

   SKR_ERR_BAD_PARAMETERS Invalid function arguments

   SKR_ERR_OUT_OF_MEMORY Memory allocation failed.

   SKR_ERR_NOT_SUPPORTED The function and/or parameters are not supported by the library.

   -- Some internal error code other than mentioned above can be returned. Refer to securekey_api_types.h for error code description.

2. **Generate Key.**

   SK_RET_CODE SK_GenerateKeyPair(SK_MECHANISM_INFO *pMechanism, SK_ATTRIBUTE *attr, uint16_t attrCount, SK_OBJECT_HANDLE *phKey);

This API generates key pair on the HSM, and returns a handle to it. API always succeeds even if an object with same attributes exists in HSM. Duplicate object is created. Application needs to take care that duplicate objects should not be created.

pMechanism is mechanism for key pair generation. For example: SKM_RSA_PKCS_KEY_PAIR_GEN.

attr is an array of attributes that the object should be created with. Some of the attributes may be mandatory, such as SK_ATTR_OBJECT_INDEX (the id of the object), and some are optional.

Application needs to take care that valid attributes are passed, library does not return any error on receiving inconsistent/ incompatible attributes.

param[in] pMechanism Mechanism for key pair generation

param[in] attr The array of attributes to be used in creating the Object.

param[in] attrCount The number of attributes in attr

param[in, out] phKey IN: A pointer to a handle (must not be NULL);

OUT: The handle of the created Object

Return Values:

SKR_OK Successful execution, phObject is filled with created object handle.

SKR_ERR_BAD_PARAMETERS Invalid function arguments

SKR_ERR_OUT_OF_MEMORY Memory allocation failed.

SKR_ERR_NOT_SUPPORTED The function and/or parameters are not supported by the library.

--Some internal error code other than mentioned above can be returned. Refer to securekey_api_types.h for error code description.

3. **Erase Object.**

   SK_RET_CODE SK_EraseObject(SK_OBJECT_HANDLE hObject);

   Erases an object from the HSM. This means that the object with the specified handle can no longer be used.

   param[in] hObject

   The handle of the Object to be erased.

   Return Values:

   SKR_OK Successful execution SKR_ERR_BAD_PARAMETERS Invalid function arguments -- Some internal error code other than mentioned above to be returned. Refer to securekey_api_types.h for error code description.

   Further details of the APIs and its types are available in the files <securekey_api.h> and <securekey_api_types.h> in folder **secure_obj.**

NOTE

1. Maximum of 50 objects can be created/generated as of now.
2. Secure Object Library will not be throwing any error if multiple objects having same attributes are being created. It is applications responsibility to take care of attributes that are passed during creation/generation of objects.

Manufacturing Key APIs:

Following secure boot, the system runs the key generation routine producing an ECC Public and Private Key pair, referred to as Manufacturing Protection Key Pair(MPKey).

Key Generation is performed by BootRom. APIs for getting MP Public key, signing using MP Private key and for getting the MP Tag are described below.

For complete documentation on how to perform the key generation, public key export, and signing with the ECC private key, refer to the Manufacturing-protection chip authentication

process section in the SoC's Security (SEC) Reference Manual 5.6

NOTE: For this feature to work board must be booted in Secure Boot mode, with ITS bit set to 1.

1. **Get MP Public key.**

   enum sk_status_code sk_mp_get_pub_key(struct sk_EC_point *pub_key);

   Get Manufacturing Protection(MP) Public Key (ECC P256 Key).

   param[in,out] pub_key: This is MP Public Key to be returned. Application needs to allocate memory for sk_EC_point. Each of the coordinate x & y needs to allocate sk_EC_point.len memory. sk_EC_point.len can be obtained using **sk_mp_get_pub_key_len()**.

   Return Values:

   SK_SUCCESS on success, error value otherwise.

2. **Sign using MP Private Key**

   enum sk_status_code sk_mp_sign(unsigned char * msg, uint8_t msglen,

   struct sk_EC_sig * sig, uint8_t * digest, uint8_t digest_len)

   Sign the msg using MP Priv Key. While signing MP Message, it will be prepended to message. Message over which signature will be calculated = MP message + msg.

   param[in] msg: Pointer to the message to be signed.

   param[in] msglen: Length of the message to be signed.

   param[in,out] sig: This is Signature calculated. Application needs to allocate memory for sk_EC_sig. Each of the parts r & s needs to be allocated sk_EC_sig.len memory. sk_EC_sig.len can be obtained using sk_mp_get_sig_len().

   param[in, out] digest: Digest(SHA256) of the message to be signed. Digest is calculated by prepending MP Message to the msg.

   param[in] digest_len: Length of digest. Application needs to allocate memory for sk_EC_point. Each of the coordinate x & y needs to allocate sk_EC_point.len memory. sk_EC_point.len can be obtained using sk_mp_get_pub_key_len().

   Return Values:

   SK_SUCCESS on success, error value otherwise.

3. **Get MP Tag.**

   enum sk_status_code sk_mp_get_mp_tag(uint8_t *mp_tag_ptr,uint8_t mp_tag_len);

   Get the MP Message. While signing, MP Message is prepended to message automatically. User can call this function to get MP message tag during verification operation.

   param[in, out] mp_tag_ptr: Pointer to the message to be signed. Application needs to allocate memory of length returned by **sk_mp_get_tag_len().**

   param[in] mp_tag_len: Length of the mp_tag_ptr buffer

   Return Values:

   SK_SUCCESS on success, error value otherwise.

   The API definition can be found in file **securekey_mp.h**. Sample applications have also been provided which demonstrate how to use APIs.

6.5.3 Integrating applications with Secure Object

There are following ways in which applications can interact with Secure Objects stored in HSM/Token.

- Using PKCS#11 APIs.
- Using Secure Object APIs.
- Applications using OpenSSL APIs
  - Secure Object Library based OpenSSL Engine (libeng_secure_obj)
  - PKCS#11 based OpenSSL Engine (Third party OpenSC/libp11)

6.5.3.1 Using PKCS#11 APIs

Applications can directly use the PKCS#11 APIs to interact with the Secure Objects stored in HSM/Token. Currently we support PKCS#11 APIs mentioned in PKCS#11 APIs.

PKCS#11 library can also be used with any OpenSource PKCS#11 application such as p11tool, softhsm2-utils etc.

We have tested this library with p11tool for following operations:

- Listing tokens: **p11tool --list-tokens**
- Initializing token: **p11tool --initialize**
- Initializing User pin: **p11tool --initialize-pin**
- Initializing SO pin: **p11tool --initialize-so-pin**
- Generating RSA Key: **p11tool --generate-rsa**
- Importing RSA Key: **p11tool --write --load-privkey <rsa_key.pem>**

For more information on p11tool commands, please check here

We have also created a reference application pkcs11_app for showing how to use the PKCS#11 APIs for writing your own application.

Commands to run **pkcs11_app** are shown here

6.5.3.2 Using Secure Object APIs

Applications can directly use the Secure Object Library APIs to interact with the Secure Objects stored in HSM/Token. Currently we support APIs mentioned in Secure Object APIs.

We have also created a reference application sobj_app for showing how to use the Secure Object APIs.

Commands to run **sobj_app** are shown here.

6.5.3.3 Applications using OpenSSL APIs

This topic provides examples of usage with OpenSSL. It is recommended that you should familiarize yourself with Open SSL.

Refer to the appropriate documents for Open SSL commands at the following location:

http://www.openssl.org/docs/

Open SSL provides the support of engine (basically hardware devices) to store the keys on hardware devices to make keys more secure.

There are 2 ways in which applications using the OpenSSL APIs can access the Secure Objects stored in HSM/Token.

- Secure Object Library based OpenSSL Engine (libeng_secure_obj).
- PKCS#11 based OpenSSL Engine (Third party OpenSC/libp11).

6.5.3.3.1 Secure Object Library based OpenSSL Engine (libeng_secure_obj)

NXP provides the Secure Object Library based OpenSSL Engine that is used to communicate with underlying HSM.

This engine is based on Secure Object Library, It does following things:

1. RSA Private Encryption.
2. RSA Private Decryption.
3. ECDSA Signing Operation.

All other RSA/ECDSA operations will be done by OpenSSL itself.

This engine does not support generation of RSA Keys. Keys will be generated via another app **sobj_app** and these keys are used in the applications using this OpenSSL Engine.

Refer **Running the sobj_eng_app** section for screenshots of app using OpenSSL engine.

Example Usage with OpenSSL

This topic provides examples of usage with OpenSSL:

- Using the engine from command Line.Change the following in `openssl.cnf` (often in `/etc/ssl/openssl.cnf`).

  This line must be placed at the top, before any sections are defined:

  openssl_conf = conf_section

  Add following section at bottom of file:

```
[conf_section]
engines = engine_section
[engine_section]
secure_obj = sobj_section
[sobj_section]
engine_id = eng_secure_obj
dynamic_path = <path where lib_eng_secure_obj.so is placed>
default_algorithms = RSA
init = 1
```

  Note: This sections shows only RSA examples, same can be done for EC by changing *default_algorithms* in openssl.cnf as shown below:

```
default_algorithms = RSA, EC
```

  Testing the engine operation:

  To verify that the engine is properly operating, you can use the following example:

```
root@Ubuntu:~#
root@Ubuntu:~# openssl engine
(dynamic) Dynamic engine loading support
(eng_secure_obj) secure object OpenSSL Engine.
root@Ubuntu:~#
root@Ubuntu:~#
```

  If you do not update the OpenSSL configuration file, specify the engine configuration explicitly.

```
$: openssl engine -t dynamic -pre SO_PATH:<path-to-libeng_secure_obj.so> -pre ID:eng_secure_obj
-pre LIST_ADD:1 -pre LOAD
```

```
root@Ubuntu:~#
root@Ubuntu:~# openssl engine -t dynamic -pre SO_PATH:/usr/lib/aarch64-linux-gnu/openssl-1.0.0/
engines/libeng_secure_obj.so -pre ID:eng_secure_obj -pre LIST_ADD:1 -pre LOAD
(dynamic) Dynamic engine loading support
[Success] : SO_PATH:/usr/lib/aarch64-linux-gnu/openssl-1.0.0/engines/libeng_secure_obj.SO
[Success] : ID:eng_secure_obj
[Success] : LIST_ADD:1
```

```
[Success] : LOAD
LOADED: (eng_secure_obj) Secure object OpenSSL Engine.
    [available]
root@Ubuntu:~#
```

- Using OpenSSL from the command line.

  Following commands can be used to generate RSA/ECDSA key-pair and use them in signing any data and verifying the signatures generated.

```
$: sobj_app -G -m rsa-pair -s 2048 -l "rsa_gen_2048" -i 1 -w rsa_2048.pem ## Generating RSA key-
pair ##
$: openssl rsa -in rsa_2048.pem -pubout -out rsa_pub_2048.pem  ## Taking out Public Key for
verifying signature ##
$: openssl dgst -sha1 -sign rsa_2048.pem -out sig.data data  ## Generating Signature "sig.data"
of "data" ##
$: openssl dgst -sha1 -verify rsa_pub_2048.pem -signature sig.data data  ## Verifying the
signature using Public Key ##
```

  Same thing can be done for ECDSA keys of prime256v1 by using following commands:

```
$: sobj_app -G -m ec-pair -c prime256v1 -l "ecc_256" -i 2 -w ec256.pem
$: openssl ec -in ec256.pem -pubout -out ec_pub_256.pem
$: openssl dgst -sha1 -sign ec256.pem -out sig.data data
$: openssl dgst -sha1 -verify ec_pub_256.pem -signature sig.data data
```

  For ECDSA secp384r1 curve us following commands:

```
$: sobj_app -G -m ec-pair -c secp384r1 -l "ecc_384" -i 3 -w ec384.pem
$: openssl ec -in ec384.pem -pubout -out ec_pub_384.pem
$: openssl dgst -sha1 -sign ec384.pem -out sig.data data
$: openssl dgst -sha1 -verify ec_pub_384.pem -signature sig.data data
```

- This section describes how to use the command line to create a self-signed certificate for "NXP Semiconductor". The key of the certificate is generated in the Secure Object HSM and will not exportable.

  As per the following examples, generate a private key in the HSM with sobj_app, This will also create a fake PEM file **“dev_key.pem”** having information to get the required key from HSM.

  Following command is generating RSA key-pair.

```
$: sobj_app -G -m rsa-pair -s 2048 -l "Test_Key" -i 1 -w dev_key.pem
```

  ECDSA key-pair can also be generated using following command:

```
$: sobj_app -G -m ec-pair -c prime256v1 -l "ecc_256" -i 30 -w dev_key.pem
```

  To generate a certificate with key in the Secure Object module, the following commands can be used:

```
$ openssl req -new -key dev_key.pem -out req.pem -text -x509 -subj "/CN=NXP Semiconductor"
$ openssl x509 -signkey dev_key.pem -in req.pem -out cert.pem
```

  The first command creates a self-signed Certificate for “NXP Semiconductor". The signing is done using the key specified by the fake PEM file.

  The second command creates a self-signed certificate for the request, the private key used to sign the certificate is the same private key used to create the request.

6.5.3.3.2 PKCS#11 based OpenSSL Engine (Third party OpenSC/libp11)

libp11 is a library implementing a thin layer on top of PKCS#11 API to make using PKCS#11 implementations easier.

You can get library from: https://github.com/OpenSC/libp11 .

This code repository produces two libraries:

- libp11 provides a higher-level (compared to the PKCS#11 library) interface to access PKCS#11 objects. It is designed to integrate with applications that use OpenSSL.
- pkcs11 engine plugin for the OpenSSL library allows accessing PKCS#11 modules in a semi-transparent way.

pkcs11 engine for OpenSSL can be installed on board using command **sudo apt-get install libengine-pkcs11-openssl**

Above command will install the libpkcs11.so (pkcs11 engine) in /usr/lib/aarch64-linux-gnu/engines-1.1/libpkcs11.so and this will be *dynamic_path* in OpenSSL onfiguration file.

For running the PKCS#11 OpenSSL Engine with our PKCS#11 Library add following into your global OpenSSL configuration file (often in /etc/ssl/openssl.cnf). This line must be placed at the top, before any sections are defined:

```
openssl_conf = openssl_init
```

This should be added to the bottom of the file:

```
[openssl_init]
engines=engine_section

[engine_section]
pkcs11 = pkcs11_section

[pkcs11_section]
engine_id = pkcs11
dynamic_path = <path-to-pkcs11-engine>/libpkcs11.so
MODULE_PATH = <path-to-NXP-pkcs11-library>/libpkcs11.so
init = 0
```

The dynamic_path value is the pkcs11 engine plug-in, the MODULE_PATH value is the NXP PKCS#11 library. The engine_id value is an arbitrary identifier for OpenSSL applications to select the engine by the identifier.

Testing the engine operation

To verify that the engine is properly operating you can use the following example.

```
$ openssl engine pkcs11 -t
(pkcs11) pkcs11 engine
[ available ]
```

Using p11tool and OpenSSL from the command line:

This section demonstrates how to use the command line to create a self-signed certificate for "NXP Semiconductor". The key of the certificate will be generated in the token and will not exportable.

p11tool from GnuTLS and this engine with OpenSSL work in combination.

p11tool is a tool that manipulate PKCS #11 tokens. Export/import data from PKCS #11 tokens. To use PKCS #11 tokens with gnutls the configuration file /etc/gnutls/pkcs11.conf must exist and contain number lines of the form "load=<pkcs-library-path>" or this PKCS#11 module can be provided directly as –provider in command line as argument.

p11tool can be installed by running command **sudo apt-get install gnutls-bin**

For more configuration options check: https://www.gnutls.org/manual/html_node/p11tool-Invocation.html.

Check for key which is already created from **sobj_app** via p11tool.

The following commands utilize p11tool for that.

```
$ p11tool --provider <path-to-NXP-PKCS-library>/libpkcs11.so --list-privkeys
```

```
root@localhost:~# p11tool --provider /root/libpkcs11.so --list-privkeys
Object 0:
    URL:
pkcs11:model=;manufacturer=NXP;serial=1;token=TEE_BASED_TOKEN;%01%00%00%00;object=Device_Key3;type=pri
vate
    Type: Private Key
    Label: Device Key3
    Flags: CKA_NEVER_EXTRACTABLE; CKA_SENSITIVE;
    ID: 01:00:00:00
Object 1:
    URL:
pkcs11:model=;manufacturer=NXP;serial=1;token=TEE_BASED_TOKEN;%01%00%00%00;object=Device_Key2;type=pri
vate
    Type: Private Key
    Label: Device Key2
    Flags: CKA_NEVER_EXTRACTABLE; CKA_SENSITIVE;
    ID: 01:00:00:00

Object 0:
    URL:
pkcs11:model=;manufacturer=NXP;serial=1;token=TEE_BASED_TOKEN;%01%00%00%00;object=Device_Key3;type=pri
vate
    Type: Private Key
    Label: Device Key
    Flags: CKA_NEVER_EXTRACTABLE; CKA_SENSITIVE;
    ID: 01:00:00:00
root@localhost:~#
```

Note the PKCS #11 URL shown above and use it in the commands below.

To generate a certificate with its key in the PKCS #11 module, the following command can be used.

Following command creates a self-signed Certificate for "NXP Semiconductor". The signing is done using the key specified by the URL.

```
$ openssl req -engine pkcs11 -new -key
"pkcs11:model=;manufacturer=NXP;serial=1;token=TEE_BASED_TOKEN;id=%01%00%00%00;object=Device_Key3
;type=private" -keyform engine -out req.pem -text -x509 -subj "/CN=NXP Semiconductor"
```

6.5.4 Board Bootup & Running applications

6.5.4.1 Board Bootup

1. Prepare the images using the LSDK documentation and bootup the board with **secure-boot and ITS set to 1.** ITS = 1 is required for bootrom to generate the Manufacturing Protection Private Key.

   For setting ITS bit to 1 run following command after programming SRK Hash and before removing the boot hold-off. The test is performed on LS1046ARDB.

   #To do ITS=1

   ccs::write_mem 32 0x1e80200 4 0 0x00000004

   You can refer here for documentation - https://lsdk.github.io/document.html

2. After booting up the board with LSDK 20.04 images, Check if following images are placed in corresponding places.

Binary	Place in rootfs
b05bcf48-9732-4efa-a9e0-141c7c888c34.ta	/lib/optee_armtz/
libsecure_obj.so	/usr/local/lib
sobj_app	/usr/local/bin
mp_app	/usr/local/bin
mp_verify	/usr/local/bin
libeng_secure_obj.so	/usr/lib/aarch64-linux-gnu/openssl-1.0.0/engines/
sobj_eng_app	/usr/local/bin
securekeydev.ko	This path depends on Linux Kernel Version:
	Linux Kernel 4.9 - /lib/modules/4.9.xx<commit-id>/extra/
	Linux Kernel 4.14 - /lib/modules/4.14.xx<commit-id>/extra/
libpkcs11.so	/usr/local/lib
pkcs11_app	/usr/local/bin
thread_test	/usr/local/bin

For Compilation steps, refer **Appendix Section** at end of this document.

3. Run "**tee-supplicant &**" command from linux prompt.
4. Depending on linux kernel version used **"insmod securekeydev.ko"** from right folder**.**
5. Run the applications as described in Running the applications.

6.5.4.2 Running applications

Two applications are available with the package.

- **sobj_app** - Provides interface to generate/import key objects via Secure Object Library
- **pkcs11_app** – Provides interface to enumerate objects in the HSM and perform cryptographic operations.
- **mp_app** - This application demonstrates how to Get MP Public Key, sign a message using MP Private Key, Get Message tag.
- **mp_verify** - This app uses OpenSSL APIs to verify the signature obtained by using mp_app application.
- **sobj_eng_app** – This app uses OpenSSL APIs to show how to use Secure Object based OpenSSL Engine. This application is loading the private key and then doing cryptographic operations using this key.
- **thread_test** - PKCS#11 application to test multithreading feature of PKCS#11 library.

NOTE: These are reference applications to demonstrate the usage of APIs as described in Supported APIs

6.5.4.2.1 sobj_app

To create/generate objects, run **sobj_app** application.

- **sobj_app** – This command shows help related to sobj_app.

```
root@Ubuntu:~# sobj_app
    Only one of the below options are allowed per execution:-

         -C - Create Object
         -G - Generate Object
         -A - Attributes of the Object
         -L - List Object
         -R - Remove/Erase Object

         Use below Sub options along with Main options:-
                 -o - Object Type (Supported: pair, pub)
                 -k - Key Type (Supported: rsa, ec)
                 -s - RSA Key Size/Length (Supported: 1024, 2048).
                 -c - EC Curve (Supported: prime256v1, secp384r1).
                 -f - File Name (.pem) (Private Key).
                 -l - Object Label
                 -i - Object Id. (In Decimal)
                 -h - Object Handle (In Decimal)
                 -n - Number of Objects (Default = 5)
                 -m - Mechanism Id (Supported: rsa-pair, ec-pair)
                 -w - Fake .pem file.(Optional command while generating/creating RSA, ECDSA key-pair).

        Usage:
                Creation:
                sobj_app -C -f <private.pem> -k <key-type> -o <obj-type> -s <key
                sobj_app -C -f sk_private.pem -k rsa -o pair -s 2048 -l "Device_
                sobj_app -C -f sk_private.pem -k ec -o pair -l "Device_Key" -i 1
                sobj_app -C -f sk_private.pem -k rsa -o pair -s 2048 -l "Device_

                Generation:
                sobj_app -G -m <mechanism-ID> -s <key-size> -l <key-label> -i <k
                sobj_app -G -m rsa-pair -s 2048 -l "Device_Key" -i 1
                sobj_app -G -m ec-pair -c prime256v1 -l "Device_Key" -i 1
                sobj_app -G -m rsa-pair -s 2048 -l "Device_Key" -i 1 -w dev_key.

                Attributes:
                sobj_app -A -h <obj-handle>
                sobj_app -A -h 1

                List:
                sobj_app -L [-n <num-of-obj> -k <key-type> -l <obj-label> -s <ke
                 Objects can be listed based on combination of any above criteri

                Remove
                sobj_app -R -h <obj-handle>
                sobj_app -R -h 1
```

- **Importing an RSA key pair to HSM**

  sobj_app -C -f <private.pem> -k <key-type> -o <obj-type> -s <key-size> -l <obj-label> -i <obj-ID>

  This command helps in importing a key to the HSM. It creates an object in HSM reading key from <private.pem> with object label <obj-label> and object ID <obj-ID>. This private.pem can be generated by openssl using the command below:

  openssl genrsa -out rsa_key_2048.pem 2048

  Handle of the object created in the HSM is printed as an output to the command. This handle can be used for further operations on the created object (for example, delete, printing attributes and so on)

```
root@localhost:~# sobj_app -C -f rsa_key_2048.pem -k rsa -o pair -s 2048 -l "rsa_create_2048" -i 0
Creating the Object.
Import Key from rsa_key_2048.pem
Key Length = 2048
Object created successfully handle = 0
root@localhost:~#
root@localhost:~#
root@localhost:~# sobj_app -C -f rsa_key_2048.pem -k rsa -o pub -s 2048 -l "rsa_create_2048" -i 0
Creating the Object.
Import Key from rsa_key_2048.pem
Key Length = 2048
Object created successfully handle = 1
```

- **Importing an ECDSA key pair to HSM**

  sobj_app -C -f <private.pem> -k <key-type> -o <obj-type> -l <obj-label> -i <obj-ID>

  This command helps in importing a key to the HSM. It will create an object in HSM reading key from <private.pem> with object label <obj-label> and object ID <obj-ID>.

  This private.pem can be generated by openssl using below command:

  openssl ecparam -genkey -name prime256v1 -noout -out ec_key_256.pem

  Handle of the object created in the HSM is printed as an output to the command. This handle can be used for further operations on the created object (eg delete, printing attributes etc)

```
root@localhost:~#
root@localhost:~# sobj_app -C -f ec_key_256.pem -k ec -o pair -l "ecc_create_256" -i 2
Creating the Object.
Object created successfully handle = 2
root@localhost:~#
root@localhost:~# sobj_app -C -f ec_key_256.pem -k ec -o pub -l "ecc_create_256" -i 2
Creating the Object.
Object created successfully handle = 3
root@localhost:~#
```

- **Generating an RSA key pair in HSM**

  sobj_app -G -m <mechanism-ID> -s <key-size> -l <key-label> -i <key-ID>

  This command generates an object of type derived from mechanism-ID of size <key-size> with label <key-label> and ID <key-ID>

  Handle of the object created is printed as an output to the command. This handle can be used for further operations on the created object (for example, delete, printing attributes and so on)

```
root@localhost:~#
root@localhost:~# sobj_app -G -m rsa-pair -s 2048 -l "rsa_gen_2048" -i 1
Generating the Object.
Objects generated successfully handle
Private Key = 4, Public Key = 5
Exiting GenerateKeyPair
root@localhost:~#
root@localhost:~#
```

- **Generating ECDSA key pair in HSM**

  sobj_app -G -m <mechanism-ID> -c <curve> -l <key-label> -i <key-ID>

  This command will generate an object of type derived from mechanism-ID of size <key-size> with label <key-label> and ID <key-ID>

  Handle of the object created is printed as an output to the command. This handle can be used for further operations on the created object (eg delete, printing attributes etc)

```
root@localhost:~#
root@localhost:~# sobj_app -G -m ec-pair -c prime256v1 -l "ecc_gen_256" -i 4
Generating the Object.
Objects generated successfully handle
Private Key = 6, Public Key = 7
Exiting GenerateKeyPair
root@localhost:~#
```

- **Display attributes of an object in the HSM**

  sobj_app -A -h <obj-handle>

  This command shows some attributes related to object created. Pass the object handle <obj-handle> to the command. This <obj-handle> is printed during generation/import of objects to HSM.

```
root@localhost:~# sobj_app -A -h 0
Attributes of Object Handle: 0
  Object Label: rsa_create_2048
  Object Id: 0
  Object Type: KEY_PAIR[0x10000]
  Object Key Type: RSA[0x0]
root@localhost:~#
root@localhost:~#
root@localhost:~# sobj_app -A -h 6
Attributes of Object Handle: 6
  Object Label: ecc_gen_256
  Object Id: 4
  Object Type: KEY_PAIR[0x10000]
  Object Key Type: EC[0x1]
root@localhost:~#
root@localhost:~#
root@localhost:~#
root@localhost:~# sobj_app -A -h 4
Attributes of Object Handle: 4
  Object Label: rsa_gen_2048
  Object Id: 1
  Object Type: KEY_PAIR[0x10000]
  Object Key Type: RSA[0x0]
root@localhost:~#
root@localhost:~#
```

- **List handles of the objects available in the HSM**

  sobj_app -L [-n <num-of-obj> -k <key-type> -l <obj-label> -s <key-size> -i <obj-id>]

  This command lists handles of the objects already created/generated based on some search criteria (if given). User can then use this handle to print the rest of the attributes. (See above command)

```
alhost:~# $obj_app -L -n 20
the search option (-i -o -k -s -l) is provided. Listing all Object.
g objects found:
] handle = 0
] handle = 1
] handle = 2
] handle = 3
] handle = 4
] handle = 5
] handle = 6
] handle = 7
alhost:~#
alhost:~#
alhost:~#
alhost:~# $obj_app -L -l ecc_create_256
Option [-n]. Listing max of 5 objects.
g objects found:
] handle = 2
] handle = 3
alhost:~#
alhost:~#
alhost:~# $obj_app -L -l ecc_create
Option [-n]. Listing max of 5 objects.
t Found.

g objects found:
alhost:~#
alhost:~#
alhost:~# $obj_app -L -s 2048
Option [-n]. Listing max of 5 objects.
g objects found:
] handle = 0
] handle = 1
] handle = 4
] handle = 5
alhost:~#
```

6.5.4.2.2 pkcs11_app

- **pkcs11_app –** This command shows commands available.

```
root@Ubuntu:/greengrass# pkcs11_app
    Only one of the below option is allowed per execution:-

        -I - Library Information.
        -T - Token
        -P - Slot
        -M - Mechanism
        -F - Find
        -S - Sign
        -V - Verify
        -E - Encrypt
        -D - Decrypt

        Use below Sub options along with Main options:-
                -i - Info.
                -l - List.
                -k - Key Type (Supported: rsa, ec)
                -o - Object Type (Supported: pub, prv)
                -b - Object Label.
                -p - Slot Id.
                -n - Number of Object to be Listed (Default n =10).
                -m - Mechanism Id
                Supported Mechanism: rsa, rsa-oaep, md5-rsa, sha1-rsa, sha256-rsa, sha384-rsa, sha512-rsa, ec, sha1-ec
                EC/RSA Sign/Verify: rsa, md5-rsa, sha1-rsa, sha256-rsa, sha384-rsa, sha512-rsa, ec, sha1-ec
                RSA Encrypt/Decrypt: rsa, rsa-oaep
                -d - Plain Data
                -s - Signature Data
                -e - Encrypted Data

        Usage:
               Library Information:
                       pkcs11_app -I

               Slot/Token Commands:
                       pkcs11_app -P -l
                       pkcs11_app -P -i -p <slot-ID>; (pkcs11_app -P -i -p 0)
                       pkcs11_app -T -i -p <slot-ID>; (pkcs11_app -T -i -p 0)

               Mechanism:
                       pkcs11_app -M -l -p <slot-ID>; (pkcs11_app -M -l -p 0)
                       pkcs11_app -M -m <mech-ID> -i -p <slot-ID>; (pkcs11_app -M -m rsa -i -p 0)
                       pkcs11_app -M -i -p <slot-ID>; (pkcs11_app -M -i -p 0)

               Object Search:
                       pkcs11_app -F -p <slot-ID> [-n <num-of-obj> -k <key-type> -b <obj-label> -o <obj-type>]
                       Objects can be listed based on combination of any above criteria.

               Signature Generation
                       pkcs11_app -S -k <key-type> -b <key-label> -d <Data-to-be-signed> -m <mech-ID> -p <slot-ID>
                       pkcs11_app -S -k rsa -b Device_Key -d "PKCS11 TEST DATA" -m md5-rsa -p 0
                       pkcs11_app -S -k ec -b Device_Key -d "PKCS11 TEST DATA" -m sha1-ec -p 0

               Signature Verification
                       pkcs11_app -V -k <key-type> -b <key-label> -d <Data-previously-signed> -s <signature-file> -m <mech-ID> -p <slot-ID>
                       pkcs11_app -V -k rsa -b Device_Key -d "PKCS11 TEST DATA" -s sig.data -m md5-rsa -p 0
                       pkcs11_app -V -k ec -b Device_Key -d "PKCS11 TEST DATA" -s sig.data -m sha1-ec -p 0

               Public Key Encryption (RSA Only)
                       pkcs11_app -E -k <key-type> -b <key-label> -d <Data-to-be-encrypted> -m <mech-ID> -p <slot-ID>
                       pkcs11_app -E -k rsa -b Device_Key -d "PKCS11 TEST DATA" -m rsa -p 0

               Private Key Decryption (RSA Only)
                       pkcs11_app -D -k <key-type> -b <key-label> -e enc.data -m <mech-ID> -p <slot-ID>
                       pkcs11_app -D -k rsa -b Device_Key -e enc.data -m rsa -p 0
```

- **pkcs11_app -I:** Library Information

  pkcs11_app -P -l: List the all available slots

  pkcs11_app -P -i -p <slot-ID> : Provides the information about Slot with <slot-ID>

  pkcs11_app -T -i -p <slot-ID> : Provides the information about Token inserted in Slot <slot-ID>

```
root@Ubuntu:~#
root@Ubuntu:~# pkcs11_app -I
Getting Information about Cryptoki Library
Library Manufacturer = NXP
Library Description = libpkcs11
root@Ubuntu:~#
root@Ubuntu:~#
root@Ubuntu:~# pkcs11_app -P -l
Slot List :
        Slot ID = 0
root@Ubuntu:~#
root@Ubuntu:~# pkcs11_app -P -i -p 0
Slot info of in-use slot with ID = 0 :
        Slot Description:TEE_BASED_SLOT
        Slot Manufacturer = NXP
root@Ubuntu:~#
root@Ubuntu:~#
root@Ubuntu:~# pkcs11_app -T -i -p 0
TokenInfo for Slot Id: 0.
        Token Label = TEE_BASED_TOKEN
        Token Manufacturer = NXP
root@Ubuntu:~#
root@Ubuntu:~#
root@Ubuntu:~# _
```

- **pkcs11_app -M -l -p <slot-ID> :** Lists the Mechanism List supported by token in Slot <slot-ID>

  pkcs11_app -M -m <mech-ID> -i -p <slot-ID> : Gives information about the mechanism with <mech-ID> for Slot <slot-ID>

```
root@Ubuntu:~/new# pkcs11_app -M -l -p 0
Mechanism listing from the Slot Id = 0:
        CKM_MD5 with mechanism ID[528].
        CKM_SHA_1 with mechanism ID[544].
        CKM_SHA256 with mechanism ID[592].
        CKM_SHA384 with mechanism ID[608].
        CKM_SHA512 with mechanism ID[624].
        CKM_RSA_PKCS with mechanism ID[1].
        CKM_MD5_RSA_PKCS with mechanism ID[5].
        CKM_SHA1_RSA_PKCS with mechanism ID[6].
        CKM_SHA256_RSA_PKCS with mechanism ID[64].
        CKM_SHA384_RSA_PKCS with mechanism ID[65].
        CKM_SHA512_RSA_PKCS with mechanism ID[66].
        CKM_ECDSA_SHA1 with mechanism ID[4162].
        CKM_ECDSA with mechanism ID[4161].
        CKM_RSA_PKCS_KEY_PAIR_GEN with mechanism ID[0].
        CKM_EC_KEY_PAIR_GEN with mechanism ID[4160].
        CKM_RSA_PKCS_OAEP with mechanism ID[9].
root@Ubuntu:~/new#
root@Ubuntu:~/new#
root@Ubuntu:~/new# pkcs11_app -M -m rsa -i -p 0
Mechanism Info for CKM_RSA_PKCS with mechanism ID[1].
        Minimum Key Size = 512
        Maximum Key Size = 2048
        Mechanism Capabilties: CKF_DERYPT,  CKF_SIGN,
root@Ubuntu:~/new#
root@Ubuntu:~/new# pkcs11_app -M -m rsa-oaep -i -p 0
Mechanism Info for CKM_RSA_PKCS_OAEP with mechanism ID[9].
        Minimum Key Size = 1024
        Maximum Key Size = 2048
        Mechanism Capabilties: CKF_DERYPT,
root@Ubuntu:~/new#
root@Ubuntu:~/new#
root@Ubuntu:~/new# pkcs11_app -M -m ec -i -p 0
Mechanism Info for CKM_ECDSA with mechanism ID[4161].
        Minimum Key Size = 256
        Maximum Key Size = 384
        Mechanism Capabilties: CKF_SIGN,
root@Ubuntu:~/new#
```

- **pkcs11_app -F -p <slot-ID>:** List all objects associated with token present in slot <slot-ID>

  We have 2 objects already created via the **sobj_app**, which will be shown here through **pkcs11_app** find operation.

```
root@Ubuntu:~# pkcs11_app -F -p 0
None of the search option (-b -o -k) is provided. Listing all Object.
Missing Option [-n]. Listing Object max upto Count = 10.
object[0] = aaab045aba60
        Label: ecc_gen_256
        Class: CKO_PRIVATE_KEY
        Object ID: 0x3
        Key Type: CKK_EC
object[1] = aaab045ab360
        Label: ecc_gen_256
        Class: CKO_PUBLIC_KEY
        Object ID: 0x3
        Key Type: CKK_EC
object[2] = aaab045aa9e0
        Label: rsa_gen_2048
        Class: CKO_PRIVATE_KEY
        Object ID: 0x2
        Key Type: CKK_RSA
object[3] = aaab045aa1e0
        Label: rsa_gen_2048
        Class: CKO_PUBLIC_KEY
        Object ID: 0x2
        Key Type: CKK_RSA
object[4] = aaab045a99d0
        Label: ecc_create_256
        Class: CKO_PRIVATE_KEY
        Object ID: 0x1
        Key Type: CKK_EC
object[5] = aaab045a91f0
        Label: ecc_create_256
        Class: CKO_PUBLIC_KEY
        Object ID: 0x1
        Key Type: CKK_EC
object[6] = aaab045a8870
        Label: rsa_create_2048
        Class: CKO_PRIVATE_KEY
        Object ID: 0x0
        Key Type: CKK_RSA
object[7] = aaab045a7e30
        Label: rsa_create_2048
        Class: CKO_PUBLIC_KEY
        Object ID: 0x0
        Key Type: CKK_RSA
root@Ubuntu:~#
```

- **Currently search can be made based on 3 criteria via this app:**

  -o: Object type (Can be public key, private key, certificates and so on)(For now supports only Public and Private keys)

  -k: Key type (Can be RSA, EC, AES and so on)(For now supports only RSA)

  -b: Object Label associated with object while creating/generating.

  pkcs11_app -F -o <obj-type> -k <key-type> -b <label> -p <slot-ID> : List all objects which are having object type <obj-type> of key type <key-type> and with label < label> on token present in slot <slot-ID>

```
root@Ubuntu:~# pkcs11_app -F -p 0 -o prv
Missing Option [-n]. Listing Object max upto Count = 10.
object[0] = aaaac6933a80
        Label: ecc_gen_256
        Class: CKO_PRIVATE_KEY
        Object ID: 0x3
        Key Type: CKK_EC
object[1] = aaaac6932a00
        Label: rsa_gen_2048
        Class: CKO_PRIVATE_KEY
        Object ID: 0x2
        Key Type: CKK_RSA
object[2] = aaaac69319f0
        Label: ecc_create_256
        Class: CKO_PRIVATE_KEY
        Object ID: 0x1
        Key Type: CKK_EC
object[3] = aaaac6930890
        Label: rsa_create_2048
        Class: CKO_PRIVATE_KEY
        Object ID: 0x0
        Key Type: CKK_RSA
root@Ubuntu:~#
root@Ubuntu:~# pkcs11_app -F -p 0 -k ec
Missing Option [-n]. Listing Object max upto Count = 10.
object[0] = aaaac8a4ba80
        Label: ecc_gen_256
        Class: CKO_PRIVATE_KEY
        Object ID: 0x3
        Key Type: CKK_EC
object[1] = aaaac8a4b380
        Label: ecc_gen_256
        Class: CKO_PUBLIC_KEY
        Object ID: 0x3
        Key Type: CKK_EC
object[2] = aaaac8a499f0
        Label: ecc_create_256
        Class: CKO_PRIVATE_KEY
        Object ID: 0x1
        Key Type: CKK_EC
object[3] = aaaac8a49210
        Label: ecc_create_256
        Class: CKO_PUBLIC_KEY
        Object ID: 0x1
        Key Type: CKK_EC
root@Ubuntu:~#
```

- **pkcs11_app -S -k <key-type> -b <key-label> -d <Data-to-be-signed> -m <mech-ID> -p <slot-ID>**

  This command will sign the <Data> with private key of type <key-type> having label <key-label> using mechanism specified by <mech-ID> with functions provided by token in slot <slot-ID>

After successful signing, the signature will be saved in file “sig.data”

RSA signing:

```
root@Ubuntu:~#
root@Ubuntu:~# pkcs11_app -S -k rsa -b Device_Key -d "PKCS11 TEST DATA" -m md5-rsa -p 0
Signing...
Size of Unsigned data = 16
Signature size: 256
Signature is saved in the file sig.data:
root@Ubuntu:~#
```

ECDSA signing

```
root@Ubuntu:~#
root@Ubuntu:~# pkcs11_app -S -k ec -b ecc_gen_256 -d "PKCS11 TEST DATA" -m sha1-ec -p 0
Signing...
Size of Unsigned data = 16
Signature size: 512
Signature is saved in the file sig.data:
```

- **pkcs11_app -V -k <key-type> -b <key-label> -d <Data-previously-signed> -s <signature-file> -m <mech-ID> -p <slot-ID>**

  This command verifies the signature <signature-file> with public key of type <key-type> having label <key-label> using mechanism specified by <mech-ID> with functions provided by token in slot <slot-ID> by comparing the data recovered from signature to <Data-previously-signed>. This command uses openssl APIs to do the verification. Refer to the application code for more details.

  <mech-ID> passed must match with the <mech-ID> passed during signature otherwise verification fails, as shown in following picture.

RSA Verification:

```
root@Ubuntu:~# pkcs11_app -V -k rsa -b Device_Key -d "PKCS11 TEST DATA" -s sig.data -m md5-rsa -p 0
Verifying...
CKM_MD5_RSA_PKCS verification success
root@Ubuntu:~#
root@Ubuntu:~#
root@Ubuntu:~# pkcs11_app -V -k rsa -b Device_Key -d "PKCS11TEST DATA" -s sig.data -m md5-rsa -p 0
Verifying...
CKM_MD5_RSA_PKCS verification failure
root@Ubuntu:~#
```

ECDSA Verification:

```
root@Ubuntu:~# pkcs11_app -V -k ec -b ecc_gen_256 -d "PKCS11 TEST DAT" -s sig.data -m sha1-ec -p 0
Verifying...
sig_bytes = 64
ret = 0, CKM_ECDSA_SHA1 verification failed
root@Ubuntu:~#
root@Ubuntu:~# pkcs11_app -V -k ec -b ecc_gen_256 -d "PKCS11 TEST DATA" -s sig.data -m sha1-ec -p 0
Verifying...
sig_bytes = 64
CKM_ECDSA_SHA1 verification success
root@Ubuntu:~#
```

- **pkcs11_app -E -k <key-type> -b <key-label> -d <Data> -m <mech-ID> -p <slot-ID>**

  This command will encrypt the <Data> with pulic key of type <key-type> having label <key-label> using mechanism specified by <mech-ID> with functions provided by token in slot <slot-ID>

  After successful signing, the signature will be saved in file “enc.data”

```
root@Ubuntu:~/new#
root@Ubuntu:~/new# pkcs11_app -E -k rsa -b Device_Key -d "PKCS11 TEST DATA" -m rsa -p 0
Encrypting...
Encrypted data saved in enc.data
root@Ubuntu:~/new#
root@Ubuntu:~/new#
```

- **pkcs11_app -D -k <key-type> -b <key-label> -e enc.data -m <mech-ID> -p <slot-ID>**

  This command will decrypt the encrypted data in "enc.data" with private key of type <key-type> having label <key-label> using mechanism specified by <mech-ID> with functions provided by token in slot <slot-ID>

  After successful signing, the signature will be saved in file “enc.data”

```
root@Ubuntu:~/new#
root@Ubuntu:~/new# pkcs11_app -D -k rsa -b Device_Key -e enc.data -m rsa -p 0
Decrypting...
Decrypted Data: PKCS11 TEST DATA
root@Ubuntu:~/new#
root@Ubuntu:~/new#
```

6.5.4.2.3 mp_app

This application demonstrates how to use the following APIs:

- Get MP Public Key.
- Sign a message using MP Private Key.
- Get Message tag.

The application source code at location “**secure_obj/securekey_lib/app/mp_app.c**” can be used as reference for integration of these APIs.

mp_app - This application gives 3 options.

Usage:

- **mp_app -p:** Get the MP Public key and store it in a file "pub_key"
- **mp_app -s <MSG>:** Sign <MSG> with MP Priv key and store signature in file "signature"
- **mp_app -m:** Get the MP Message tag and store it in file "mtag"

```
root@Ubuntu:~#
root@Ubuntu:~# mp_app -p
Generating the MP Public Key
Public key x part = 94d9548963b8fd4f4ebd253320cc8a7ad3342b16288c18eccddc2fd1482a9b0b
Public key y part = e2d4bd22c40a7c2a41a8ca68204c0a346dde9721bb710bc3a5df31a50099c572
Public key in form of x followed by y is saved in pub_key file
root@Ubuntu:~#
root@Ubuntu:~# mp_app -s "HELLO"

Signing message  'HELLO' with MP Priv Key
HELLO in Hex = 48454c4c4f
Generated Hash = 504eb5a99c0ab4a6b27678cb6dd36bd2c365d9d5a666cc16ac5a2fbd5b5049a9
Signature part r = 37a3bac5c27a981f6826c6c3e6841ff687a838e24fc5fb9dd8809b567a5fc194
Signature part s = 2babeea4da0192d2e6363eebc179e49dbcf933865e13a0215eb06acb380a6cdd
Signature in form of r followed by s is saved in signature file
root@Ubuntu:~#
root@Ubuntu:~#
root@Ubuntu:~# mp_app -m

MP Tag = 9bac8c5220dcbec0114d651879e5d5891160fcf14e3d5a4d79403c5a1252ded9
MP Tag is saved in mptag file
root@Ubuntu:~#
root@Ubuntu:~#
```

6.5.4.2.4 mp_verify

This app uses OpenSSL APIs to verify the signature obtained by using **"mp_app"** application. The application source code at location "**secure_obj/securekey_lib/app/mp_verify.c**" can be used as reference.

mp_verify - This application verifies the signature generated by **mp_app -s**.

Usage:

mp_verify -p <pubkeyfile> -s <signaturefile> -m <mtagfile> -M <MSG>

This <MSG> must be same which is used in **mp_app -s <MSG>**

```
root@Ubuntu:~# mp_verify -s signature -p pub_key -m mtag -M "HELLO"
pub key file = pub_key, sign file = signature, mtag file = mtag, Message = HELLO
Pub Key read from file = 94d9548963b8fd4f4ebd253320cc8a7ad3342b16288c18eccddc2fd
1482a9b0be2d4bd22c40a7c2a41a8ca68204c0a346dde9721bb710bc3a5df31a50099c572
Signature read from file = 37a3bac5c27a981f6826c6c3e6841ff687a838e24fc5fb9dd8809
b567a5fc1942babeea4da0192d2e6363eebc179e49dbcf933865e13a0215eb06acb380a6cdd
Mtag read from file = 9bac8c5220dcbec0114d651879e5d5891160fcf14e3d5a4d79403c5a12
52ded9

Generated Hash = 504eb5a99c0ab4a6b27678cb6dd36bd2c365d9d5a666cc16ac5a2fbd5b5049a
9
Verifed EC Signature
Verification successful
root@Ubuntu:~#
```

6.5.4.2.5 sobj_eng_app

This app uses OpenSSL APIs to show how to use Secure Object based OpenSSL Engine.

Code for this app is at **"secure_obj/secure_obj-openssl-engine/app/sobj_eng_app.c ".**

This application is internally loading RSA private key and then doing cryptographic operations using this key.

Private Key operations are offloaded to Secure Object Library via this engine, and Public Key operations are done through OpenSSL itself.

In Following screenshot, see creating a key via **sobj_app**. It will be used by **sobj_eng_app** (using OpenSSL APIs) to do the cryptographic operations.

This **sobj_eng_app** is internally offloading the cryptographic operation to Secure Object Library using the OpenSSL Engine based on Secure Object Library.

```
root@localhost:~# sobj_app -G -m rsa-pair -s 2048 -l "Device_Key" -i 1 -w dev_key.pem
Generating the Object.
Objects generated successfully handle
Private Key = 0, Public Key = 1
Exiting GenerateKeyPair
root@localhost:~#
root@localhost:~# sobj_eng_app dev_key.pem pkcs
Key File = dev_key.pem
Padding Scheme = pkcs
Plain Text = This is test data to be tested
Starting RSA Public Encrypt....
Encryption Complete: Length of Encrypted Data = 256

Starting RSA Private Decryption....
Decryption Complete: Decrypted Text = This is test data to be tested

Starting RSA Private Encryption....
Plain Text = This is test data to be tested
Encryption Complete: Length of Encrypted Data = 256

Starting RSA Public Decryption....
Decryption Complete: Decrypted Text = This is test data to be tested

root@localhost:~#
root@localhost:~# sobj_eng_app dev_key.pem oaep
Key File = dev_key.pem
Padding Scheme = oaep
Plain Text = This is test data to be tested
Starting RSA Public Encrypt....
Encryption Complete: Length of Encrypted Data = 256

Starting RSA Private Decryption....
Decryption Complete: Decrypted Text = This is test data to be tested

root@localhost:~#
```

6.5.4.2.6 thread_test

PKCS#11 based application to test the multithreading support in PKCS#11 Library.

This application will be taking the number of threads to create as an argument, if not given by default it will create 10 threads.

thread_test <num-of-threads>

This application is making threads and each thread is doing the signing operation.

As part of signing operation each thread is doing following operations:

- Opening a R/O session with token.
- Find a RSA Private Key from token.
- Sign data using this RSA Private Key.
- Get the Public part of the RSA Private Key.
- Verify the generated signature using OpenSSL.

All threads try to do this in parallel, but if one of the thread finished its work and “Finalized” the library, all other threads will terminate, because library is not in initialized state now.

NOTE: This sequence of operations are used only for test purpose.

6.5.5 Validation

Above steps are fully validated and verified on LS1046ARDB platform.

6.5.6 Appendix

Appendix A: Steps to build the PKCS#11 Library

PKCS Library is using Secure Object Library. For steps compiling Secure Object Library, see section **Appendix B: Steps to build the Secure Object Library**.

From flexbuild environment:

flex-builder -c libpkcs11 -m ls1046ardb

Standalone Build:

1. Clone the libpkcs11 from: https://source.codeaurora.org/external/qoriq/qoriq-components/libpkcs11
2. Checkout tag **"LSDK-20.04"**.
3. Set path for cross-compile:

```
$:> export CROSS_COMPILE=<aarch64-toolchain>
```

4. Set path for Secure Object:

```
$:> export SECURE_OBJ_PATH=<path-to-secure_obj>/secure_obj/securekey_lib/out/export/
```

5. Set path for OpenSSL:

   Note: For interoperability, we are verifying the signature generated by PKCS Library via OpenSSL, so reference application needs OpenSSL library, so exporting OPENSSL_PATH.

   We have cloned and compiled the OpenSSL in "Steps to build the Secure Object Library", hence only give path of that folder in OPENSSL_PATH.

```
$:> export OPENSSL_PATH=<openssl-folder>
```

6. Run make:

```
$:> make
```

   This compiles the libpkcs11 and reference applications and put it into "images" folder in libpkcs11. Following images are generated:

   - **libpkcs11.so** – PKCS#11 User space library.
   - **pkcs11_app** – PKCS#11 Test App.
   - **thread_test** - PKCS#11 application to test multithreading feature of PKCS#11 library

Appendix B: Steps to build the Secure Object Library

From flexbuild environment:

flex-builder -c secure_obj -m ls1046ardb

Standalone Build:

Order of repo compilation for Secure Object Library.

1. OP-TEE OS
   a. Clone optee_os from: https://source.codeaurora.org/external/qoriq/qoriq-components/optee_os
   b. Checkout tag "**LSDK-20.04**"

c. Set the path for the following:

```
$:> export CROSS_COMPILE64=<aarch64-toolchain>
```

d. Now make.

```
$:> make CFG_ARM64_core=y PLATFORM=ls-ls1046ardb ARCH=arm
```

2. OP-TEE Client
   a. Clone optee_client from: https://source.codeaurora.org/external/qoriq/qoriq-components/optee_client
   b. Checkout tag “**LSDK-20.04**”
   c. Set path for the following:

```
$:> export CROSS_COMPILE=<aarch64-toolchain-path->
```

   d. Now make.

```
$:> make
```

3. OpenSSL:
   a. Clone openssl from: https://source.codeaurora.org/external/qoriq/qoriq-components/openssl
   b. Checkout tag “**LSDK-20.04**”
   c. Set path for the following:

```
$:> export CROSS_COMPILE=<aarch64-toolchain-path->
```

   d. Run configure as follows:

```
$:>. /Configure shared linux-aarch64
```

   e. Run make

```
$:> make
```

4. Secure Object:
   a. Clone secure_obj from: https://source.codeaurora.org/external/qoriq/qoriq-components/secure_obj
   b. Checkout tag “**LSDK-20.04**”.
      - Secure Object Library code - securekey_lib
      - Secure Object Trusted Application code - secure_storage_ta
      - Secure Key Dev Kernel Module - securekeydev
      - Secure Object OpenSSL Engine - secure_obj-openssl-engine

      There is script “compile.sh” which compiles all above components and put all binaries in “images”.
   c. Follow the below compilation steps:
      - export CROSS_COMPILE path:

```
$:> export CROSS_COMPILE= <aarch64-toolchain-path->
```

      - export ARCH path:

```
$:> export ARCH=arm64
```

- Set the paths from OP-TEE OS:

```
$:> export TA_DEV_KIT_DIR=<path-to-optee-os>/optee_os/out/arm-plat-ls/export-ta_arm64/
```

- Set path for OP-TEE Client

```
$:> export OPTEE_CLIENT_EXPORT=<path-to-optee-client>/optee_client/out/export/
```

- Set path for Secure Storage:

```
$:> export SECURE_STORAGE_PATH=<path-to-secure_obj>/secure_obj/secure_storage_ta/ta/
```

- Set path for OpenSSL:

```
$:> export OPENSSL_PATH=<openssl-folder-path>
```

- Set path for Linux Code (Used Flexbuild kernel for this):

```
$:> export KERNEL_SRC=<path-in-flexbuild-containing-kernel-source-code>
For example,
$:> export KERNEL_SRC=/home/b42224/flexbuild_2004/flexbuild/build/linux/linux/arm64/lib/
modules/4.9.62/source
```

- Set path for Linux Build Directory (Used Flexbuild kernel for this):

```
$:> export KERNEL_BUILD=<path-in-flexbuild-containing-kernel-build>
For example,
$:> export KERNEL_BUILD=/home/b42224/flexbuild_2004/flexbuild/build/linux/linux/
arm64/lib/modules/4.9.62/build
```

- Run “./compile.sh” (It will compile TA, library and Kernel Module).

```
$:> ./compile.sh
```

This will compile all the binaries and put them into the images folder in `secure_obj`. After compilation, images folder have the following:

- **b05bcf48-9732-4efa-a9e0-141c7c888c34.ta** - Trusted application for Secure Object library.
- **libsecure_obj.so** - User space Secure Object Library
- **sobj_app** - Application for creating and erasing objects.
- **mp_app** - Application for getting MP Public Key, signing using MP Private key and getting the MP tag.
- **mp_verify** - Application for verifying the signature generated through mp_app.
- **securekeydev.ko** - Kernel Module for offloading MP Key feature to CAAM. Binaries to be placed at following locations in rootfs.
- **libeng_secure_obj** - Secure Object based OpenSSL engine offloading Private Key Operations to the Secure Object Library.
- **sobj_eng_app** - This app uses OpenSSL APIs to show how to use Secure Object based OpenSSL Engine. This application is loading the private key and then doing cryptographic operations using this key.

Chapter 7
Linux Kernel

Introduction

The Linux kernel is a monolithic Unix-like computer operating system kernel. It is the central part of Linux operating systems that are extensively used on PCs, servers, handheld devices and various embedded devices such as routers, switches, wireless access points, set-top boxes, smart TVs, DVRs, and NAS appliances. It manages tasks/applications running on the system and manages system hardware. A typical Linux system looks like this:

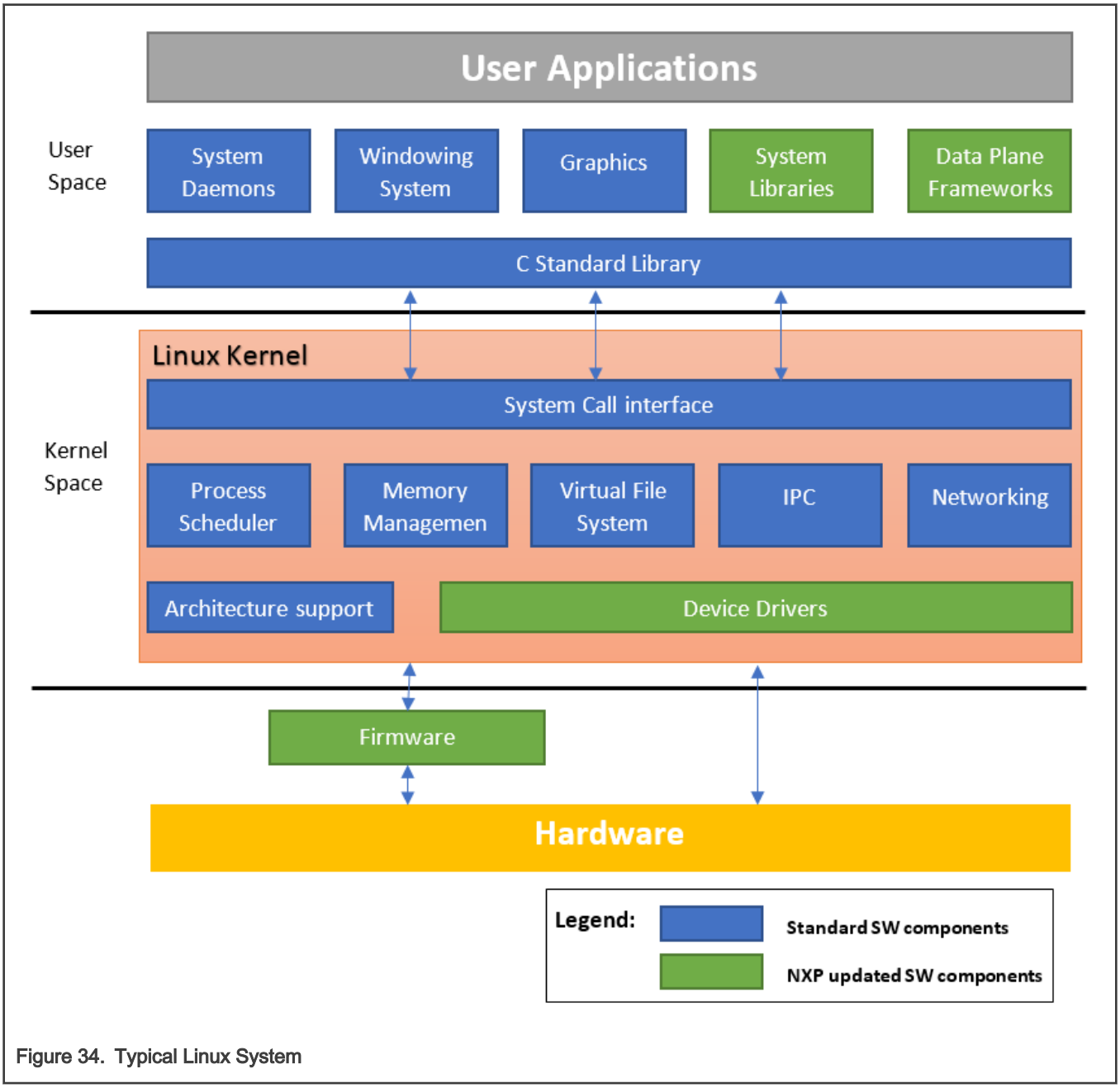

Figure 34. Typical Linux System

The Linux kernel was created in 1991 by Linus Torvalds and released as an open source project under GNU General Public License(GPL) version 2. It rapidly attracted developers around the world. In 2015 the Linux kernel has received contributions from nearly 12,000 programmers from more than 1,200 companies. The software is officially released on http://www.kernel.org website

through downloadable packages and GIT repositories. A general Linux kernel introduction from kernel.org can also be found at https://www.kernel.org/doc/html/latest/admin-guide/README.html.

Kernel Releases and relationship with Layerscape SDK

There are different Linux kernel releases coming from different sources. Below we listed the ones that are related to the LSDK kernel.

Kernel.org official kernel releases

- **Mainline**

  Mainline tree is maintained by Linus Torvalds. It's the tree where all new features are introduced and where all the exciting new development happens. New mainline kernels are released every 2-3 months.

- **Longterm (LTS)**

  There are usually several "longterm maintenance" kernel releases provided for the purposes of backporting bugfixes for older kernel trees. Only important bugfixes are applied to such kernels and they don't usually see very frequent releases, especially for older trees.

  Refer to https://www.kernel.org/category/releases.html for the current maintained Longterm releases.

Linaro LSK kernel release

Linaro is an open organization focused on improving Linux on Arm. They are also providing a Linux kernel release called Linaro Stable Kernel (LSK). It is based on kernel.org Longterm kernel releases and included Arm related features developed by Linaro. Normally these features are generic kernel features for the Arm architecture. Please refer to https://wiki.linaro.org/LSK for more information about the LSK releases.

NXP Layerscape SDK kernel

NXP's SDK kernel often contains patches that are not upstream yet so essentially the LSDK kernel is an enhanced Linaro LSK which is in turn an enhanced kernel.org LTS. In order to fully utilize the Arm open source eco-system. The kernel versions provided in NXP LSDK will be chosen from the kernel.org Longterm releases to include the important bugfixes backported. It will also include generic Arm kernel features provided by the Linaro LSK release which could be important for some users.

Getting the LSDK kernel source code

With Layerscape SDK, NXP owned/updated software components are published on github. You can use git commands to get the latest kernel source code.

- Install git command if not there already. For example, on Ubuntu:

```
$ sudo apt-get install git
```

- Clone the Linux kernel source code with git.

```
$ git clone https://source.codeaurora.org/external/qoriq/qoriq-components/linux
```

- Checkout the desired kernel version. As we provide support to the two latest LTS kernel versions in the SDK, it is possible that the default one is not your desired kernel version

```
$ cd linux
$ git branch
```

  Check the name of the current branch. If it is not the Kernel version you want, use the following command to checkout your desired kernel version: x.y

```
$ git checkout -b linux-x.y origin/linux-x.y
```

7.1 Configuring and building

Configuring and building the Linux kernel is controlled by the Kbuild sub-system. You can find documents describing the internal of Kbuild sub-system under the Documentation/kbuild/ folder in the Linux source code tree if you are adding new files or new configure options to the kernel. Otherwise as a user of Linux kernel, you probably only want to know how to fine tune the kernel configuration base on your system requirements and build new kernel image with updated configuration. These are done through *make* commands, below we will talk about `make` commands you probably need to know as a kernel user.

Environment setting for cross-compiling

This following settings are applicable when you are configuring and building kernel on a different architecture from the target. For example, compiling an Armv8 kernel on an X86 computer. If you are compiling the kernel natively on a machine of the same architecture as the target, you should skip this chapter.

- Install the cross compiler of your distribution
- Specify the target architecture in ARCH environment variable
- Specify the prefix (and path) of a cross compiler in `CROSS_COMPILE` environment variable

  ```
  $ export CROSS_COMPILE=/path/to/dir/tool-chain-prefix-
  ```

  Or just the prefix if the cross-compiler commands are already in the execution `PATH`.

  ```
  $ export CROSS_COMPILE=tool-chain-prefix-
  ```

For example, the commands needed on Ubuntu Linux will be like:

- 64-bit Arm:

  ```
  $ sudo apt-get install gcc-aarch64-linux-gnu
  $ export CROSS_COMPILE=aarch64-linux-gnu-
  $ export ARCH=arm64
  ```

- 32-bit Arm (Armv7 / 32-bit mode of Armv8):

  ```
  $ sudo apt-get install gcc-arm-linux-gnueabihf
  $ export CROSS_COMPILE=arm-linux-gnueabihf-
  $ export ARCH=arm
  ```

For the shell environment variables exported above, you can also include them directly in each make command you use. E.g. `$ ARCH=arm64 CROSS_COMPILE=aarch64-linux-gnu- make {targets}`. Exporting them will save effort if you are using make in kernel frequently.

Configuring kernel

The current kernel configuration for a kernel source tree will be kept in a hidden file named .config at the top level of the kernel source code after you changed the configuration with any of the make config command variants. You can copy it directly from one kernel source tree to another with the same kernel version to duplicate the configuration exactly. Also, you can edit it with a text editor, in which you can see a list of `CONFIG_*` symbols corresponding to each of the kernel configure option.

The following targets from the Linux kernel Kbuild framework are used to load the default kernel configuration for LSDK:

- `defconfig/${PLATFORM}_defconfig`

  Create the `.config` file by using the default config options of the architecture or platform defined in the `arch/$ARCH/configs/` directory. This normally includes all the device drivers needed for the architecture or platform.

- `${FRAGMENT}.config`

  Merge a configuration fragment that enables certain features into the .config file.

Specific command to load the default configuration of different platforms for LSDK will be:

- For Layerscape Armv8 platforms in 64bit mode:

```
$ make defconfig lsdk.config
```

- For Layerscape Armv7 platforms:

```
$ make multi_v7_defconfig multi_v7_lpae.config lsdk.config
```

- For Layerscape Armv8 platforms in 32bit mode:

```
$ make multi_v7_defconfig multi_v7_lpae.config multi_v8.config lsdk.config
```

To further fine tune the configuration base on your system need you can use the following make commands.

- `$ make menuconfig`

  Choose configure options in text based color menus, radiolists & dialogs. It is a good way to navigate through all the selectable kernel configure options in a well-organized human-readable hierarchy and you can get a description of every option when it is highlighted by selecting the `<Help>` button. In the device driver part of this User's Manual we also provided the path to the configure options needed for a feature to work in the menuconfig.

- `$ make ${FRAGMENT}.config`

  You can also utilize this capability to enable options for a specific feature in your custom kernel configuration quickly without selecting each one of them in the menuconfig. In the device driver part of this User's Manual, we listed the `CONFIG_*` symbols needed by a specific feature/driver. Put these symbols with "=y" or "=m" depending on if you want these features/drivers to be built-in or built as loadable kernel module into a `${FEATURE}.config` file under `arch/$ARCH/configs/` directory. Run `$ make ${FEATURE}.config` command, it will enable all these listed kernel configure options together.

Building kernel

Building the kernel is simple.

- To build kernel images and device tree images.

```
make
```

- To build loadable kernel modules:

```
make modules
```

You can supply `-j <NUM>` option to the above make commands to spin `NUM` concurrent threads to reduce build time on multicore systems.

After a successful build:

- Compiled kernel images are in arch/${ARCH}/boot/ folder.
- Compiled device trees (dtb files) are in arch/${ARCH}/boot/dts folder.
- Compiled kernel modules are spread out in driver folders. You can extract them to a specific folder (e.g. /folder/to/install) by using command:

```
$ make modules_install INSTALL_MOD_PATH=/folder/to/install
```

Install new kernel and modules

The path or naming convention of kernel images and modules are different for different Linux distributions. The following instructions are based on the convention of LSDK.

Using the flex-build scripts

- Copy kernel image, dtb and kernel modules from your kernel tree to the staging folder of the flexbuild script (Skip if you are using the *flexbuild -c linux* to build the kernel directly).
  - **For 64-bit Arm:**

```
$ cp arch/arm64/boot/Image.gz ${path-to-flexbuild}/build/linux/kernel/arm64/
$ cp arch/arm64/boot/dts/freescale/*.dtb ${path-to-flexbuild}/build/linux/kernel/arm64/
$ make modules_install INSTALL_MOD_PATH=${path-to-flexbuild}/build/linux/kernel/arm64/
```

  - **For 32-bit Arm:**

```
$ cp arch/arm/boot/Image.gz ${path-to-flexbuild}/build/linux/kernel/arm/
$ cp arch/arm/boot/dts/ls*.dtb ${path-to-flexbuild}/build/linux/kernel/arm/
$ make modules_install INSTALL_MOD_PATH=${path-to-flexbuild}/build/linux/kernel/arm/
```

- Regenerate the boot partition and rootfs (for commands below: `${ARCH} = arm32 | arm64`)

```
$ flex-builder -i mkbootpartition -a ${ARCH}
$ flex-builder -i merge-component -a ${ARCH}
$ flex-builder -i packrfs -a ${ARCH}
```

- Use flex-installer to deploy the updated boot partition and rootfs to the device following the Layerscape SDK user guide.

Update the target filesystem directly

This can be more convenient if you are compiling the kernel on the target device locally or you can easily update the filesystem of target device remotely (e.g. using scp, tftp, or etc.).

- Copy your Image file to `/boot` folder on the target using `cp` if compiled locally; Use any available remote update approach if compiled remotely.
- Copy dtb files to `/boot` folder on the target using `cp` if compiled locally; Use any available remote update approach to do the same if compiled remotely.
- Update kernel modules. (Note: kernel modules are required to be updated when you updated the kernel image).
  - If you compiled the kernel on the target device locally. Use the command below:

```
$ make modules_install
```

  - If you compiled the kernel remotely. Do the following:
    - Install the modules into a temporary folder (e.g. `/tmp/lsdk/`).

```
$ make modules_install INSTALL_MOD_PATH=/tmp/lsdk/
```

    - Transfer the `lib/` directory from the temporary location above to the target device using any file transfer approach and put it in the / path of the filesystem.

7.2 Device Drivers

7.2.1 Enhanced Direct Memory Access (eDMA)

Description

The SoC integrates NXP's Enhanced Direct Memory Access module. Slave device such as I2C or SAI can deploy the DMA functionality to accelerate the transfer and release the CPU from heavy load.

Kernel Configure Options

Tree View

Below are the configure options need to be set/unset while doing "make menuconfig" for kernel

Kernel Configure Tree View Options	Description
Device Drivers ---> [*] DMA Engine support ---> ---> <*> Freescale eDMA engine support	DMA engine subsystem driver and eDMA driver support

Identifier

Below are the configure identifiers which are used in kernel source code and default configuration files.

Option	Values	Default Value	Description
CONFIG_FSL_EDMA	y/m/n	n	eDMA Driver

Device Tree Binding

Device Tree Node

Below is an example device tree node required by this feature. Note that it may has differences among platforms.

```
edma0: edma@2c00000 {
                        #dma-cells = <2>;
                        compatible = "fsl,vf610-edma";
                        reg = <0x0 0x2c00000 0x0 0x10000>,
                              <0x0 0x2c10000 0x0 0x10000>,
                              <0x0 0x2c20000 0x0 0x10000>;
                        interrupts = <GIC_SPI 135 IRQ_TYPE_LEVEL_HIGH>,
                                     <GIC_SPI 135 IRQ_TYPE_LEVEL_HIGH>;
                        interrupt-names = "edma-tx", "edma-err";
                        dma-channels = <32>;
                        big-endian;
                        clock-names = "dmamux0", "dmamux1";
                        clocks = <&platform_clk 1>,
                                 <&platform_clk 1>;
                };
```

Device Tree Node Binding for Slave Device

Below is the device tree node binding for a slave device which deploy the eDMA functionality.

```
i2c0: i2c@2180000 {
                        #address-cells = <1>;
                        #size-cells = <0>;
                        compatible = "fsl,vf610-i2c";
                        reg = <0x0 0x2180000 0x0 0x10000>;
                        interrupts = <GIC_SPI 88 IRQ_TYPE_LEVEL_HIGH>;
                        clock-names = "i2c";
                        clocks = <&platform_clk 1>;
                        dmas = <&edma0 1 39>,
```

```
                        <&edma0 1 38>;
                dma-names = "tx", "rx";
                status = "disabled";
        };
```

Source Files

The following source files are related the this feature in Linux kernel.

Table 59. Source Files

Source File	Description
drivers/dma/fsl-edma.c	The eDMA driver file

Verification in Linux

1. Use the slave device which deploy the eDMA functionality to verify the eDMA driver, below is a verification with the I2C salve.

```
root@ls1021aqds:~# i2cdetect 0
WARNING! This program can confuse your I2C bus, cause data loss and worse!
I will probe file /dev/i2c-0.
I will probe address range 0x03-0x77.
Continue? [Y/n]
     0  1  2  3  4  5  6  7  8  9  a  b  c  d  e  f
00:          -- -- -- -- -- -- -- -- -- -- -- -- --
10: -- -- -- -- -- -- -- -- -- -- -- -- -- -- -- --
20: -- -- -- -- -- -- -- -- -- -- -- -- -- -- -- --
30: -- -- -- -- -- -- -- -- -- -- -- -- -- -- -- --
40: -- -- -- -- -- -- -- -- -- -- -- -- -- -- -- --
50: -- -- -- -- -- -- -- -- -- -- -- -- -- -- -- --
60: -- -- -- -- -- -- -- -- -- 69 -- -- -- -- -- --
70: -- -- -- -- -- -- -- --
root@ls1021aqds:~# i2cdump 0 0x69 i
     0  1  2  3  4  5  6  7  8  9  a  b  c  d  e  f    0123456789abcdef
00: 05 07 ff ff 5d 55 10 55 11 05 1e 00 e8 03 b5 ff    ??..]U?U???.???.
10: ff e8 03 95 00 00 00 00 aa fe 9a 00 00 00 00 78    .???....???....x
20: 05 12 04 ff 00 7f 40 14 1d 60 3c 83 05 00 40 00    ???..?@??`<??.@.
30: fe 80 c6 29 00 00 00 7a 00 ff ff ff ff ff ff ff    ???)...z........
40: 05 07 ff ff 5d 55 10 55 11 05 1e 00 e8 03 b5 ff    ??..]U?U???.???.
50: ff e8 03 95 00 00 00 00 aa fe 9a 00 00 00 00 78    .???....???....x
60: 05 12 04 ff 00 7f 40 14 1d 60 3c 83 05 00 40 00    ???..?@??`<??.@.
70: fe 80 c6 29 00 00 00 7a 00 ff ff ff ff ff ff ff    ???)...z........
80: 07 ff ff 5d 55 10 55 11 05 1e 00 e8 03 b5 ff ff    ?..]U?U???.???..
90: e8 03 95 00 00 00 00 aa fe 9a 00 00 00 00 78 00    ???....???....x.
a0: 12 04 ff 00 7f 40 14 1d 60 3c 83 05 00 40 00 fe    ??..?@??`<??.@.?
b0: 80 c6 29 00 00 00 7a 00 ff ff ff ff ff ff ff ff    ??)...z.........
c0: 07 ff ff 5d 55 10 55 11 05 1e 00 e8 03 b5 ff ff    ?..]U?U???.???..
d0: e8 03 95 00 00 00 00 aa fe 9a 00 00 00 00 78 00    ???....???....x.
e0: 12 04 ff 00 7f 40 14 1d 60 3c 83 05 00 40 00 fe    ??..?@??`<??.@.?
f0: 80 c6 29 00 00 00 7a 00 ff ff ff ff ff ff ff ff    ??)...z.........
root@ls1021aqds:~# cat /proc/interrupts
           CPU0       CPU1
 29:          0          0       GIC  29  arch_timer
 30:       5563       5567       GIC  30  arch_timer
112:        260          0       GIC 112  fsl-lpuart
120:         32          0       GIC 120  2180000.i2c
```

```
121:          0          0       GIC 121  2190000.i2c
167:          8          0       GIC 167  eDMA
IPI0:         0          1  CPU wakeup interrupts
IPI1:         0          0  Timer broadcast interrupts
IPI2:      1388       1653  Rescheduling interrupts
IPI3:         0          0  Function call interrupts
IPI4:         2          4  Single function call interrupts
IPI5:         0          0  CPU stop interrupts
Err:          0
root@ls1021aqds:~#
```

7.2.2 CAAM Direct Memory Access (DMA)

The CAAM DMA module implements a DMA driver that uses the CAAM DMA controller to provide both SG and MEMCPY DMA capability to be used by the platform. It is based on the CAAM JR interface that must be enabled in the *kernel config* as a prerequisite for the CAAM DMA driver.

The driver is based on the DMA engine framework and it is located under the DMA Engine support category in the kernel config menu.

NOTE

This feature/driver is supported for LS1012A.

Kernel configure options

Tree overview

To enable the CAAM DMA module, set the following options for `make menuconfig`:

```
-*- Cryptographic API --->
    [*] Hardware crypto devices --->
            <*> Freescale CAAM-Multicore driver backend
            <*>     Freescale CAAM Job Ring driver backend
Device Drivers --->
            <*> DMA Engine support --->
            <*>     CAAM DMA engine support
```

NOTE

Be aware that the CAAM DMA driver depends on the CAAM and CAAM JR drivers, which also have to be enabled.

Identifier

The following configure identifier is used in kernel source code and default configuration files.

Option	Values	Default value	Description
CONFIG_CRYPTO_DEV_FSL_CAAM_DMA	y/m/n	n	CAAM DMA engine support

Device tree node

Below is an example device tree node required by this feature.

```
caam_dma {
    compatible = "fsl,sec-v5.4-dma";
};
```

Source files

The following source file is related to this feature in the Linux kernel.

Source File	Description
drivers/dma/caam_dma.c	The CAAM DMA driver

Verification in Linux

On a successful probing, the driver will print the following message in `dmesg`:

```
[    1.964549] caam-dma caam-dma: caam dma support with 3 job rings
```

Additionally, you can also run the following commands:

```
root@localhost:~# ls -l /sys/class/dma
total 0
lrwxrwxrwx 1 root root 0 Jan 28 15:58 dma0chan0 -> ../../devices/platform/soc/
2c00000.edma/dma/dma0chan0
lrwxrwxrwx 1 root root 0 Jan 28 15:58 dma0chan1 -> ../../devices/platform/soc/
2c00000.edma/dma/dma0chan1
lrwxrwxrwx 1 root root 0 Jan 28 15:58 dma0chan10 -> ../../devices/platform/soc/
2c00000.edma/dma/dma0chan10
lrwxrwxrwx 1 root root 0 Jan 28 15:58 dma0chan11 -> ../../devices/platform/soc/
2c00000.edma/dma/dma0chan11
lrwxrwxrwx 1 root root 0 Jan 28 15:58 dma0chan12 -> ../../devices/platform/soc/
2c00000.edma/dma/dma0chan12
lrwxrwxrwx 1 root root 0 Jan 28 15:58 dma0chan13 -> ../../devices/platform/soc/
2c00000.edma/dma/dma0chan13
lrwxrwxrwx 1 root root 0 Jan 28 15:58 dma0chan14 -> ../../devices/platform/soc/
2c00000.edma/dma/dma0chan14
lrwxrwxrwx 1 root root 0 Jan 28 15:58 dma0chan15 -> ../../devices/platform/soc/
2c00000.edma/dma/dma0chan15
lrwxrwxrwx 1 root root 0 Jan 28 15:58 dma0chan16 -> ../../devices/platform/soc/
2c00000.edma/dma/dma0chan16
lrwxrwxrwx 1 root root 0 Jan 28 15:58 dma0chan17 -> ../../devices/platform/soc/
2c00000.edma/dma/dma0chan17
lrwxrwxrwx 1 root root 0 Jan 28 15:58 dma0chan18 -> ../../devices/platform/soc/
2c00000.edma/dma/dma0chan18
lrwxrwxrwx 1 root root 0 Jan 28 15:58 dma0chan19 -> ../../devices/platform/soc/
2c00000.edma/dma/dma0chan19
lrwxrwxrwx 1 root root 0 Jan 28 15:58 dma0chan2 -> ../../devices/platform/soc/
2c00000.edma/dma/dma0chan2
lrwxrwxrwx 1 root root 0 Jan 28 15:58 dma0chan20 -> ../../devices/platform/soc/
2c00000.edma/dma/dma0chan20
lrwxrwxrwx 1 root root 0 Jan 28 15:58 dma0chan21 -> ../../devices/platform/soc/
2c00000.edma/dma/dma0chan21
lrwxrwxrwx 1 root root 0 Jan 28 15:58 dma0chan22 -> ../../devices/platform/soc/
2c00000.edma/dma/dma0chan22
lrwxrwxrwx 1 root root 0 Jan 28 15:58 dma0chan23 -> ../../devices/platform/soc/
2c00000.edma/dma/dma0chan23
lrwxrwxrwx 1 root root 0 Jan 28 15:58 dma0chan24 -> ../../devices/platform/soc/
2c00000.edma/dma/dma0chan24
lrwxrwxrwx 1 root root 0 Jan 28 15:58 dma0chan25 -> ../../devices/platform/soc/
2c00000.edma/dma/dma0chan25
lrwxrwxrwx 1 root root 0 Jan 28 15:58 dma0chan26 -> ../../devices/platform/soc/
2c00000.edma/dma/dma0chan26
lrwxrwxrwx 1 root root 0 Jan 28 15:58 dma0chan27 -> ../../devices/platform/soc/
```

```
2c00000.edma/dma/dma0chan27
lrwxrwxrwx 1 root root 0 Jan 28 15:58 dma0chan28 -> ../../devices/platform/soc/
2c00000.edma/dma/dma0chan28
lrwxrwxrwx 1 root root 0 Jan 28 15:58 dma0chan29 -> ../../devices/platform/soc/
2c00000.edma/dma/dma0chan29
lrwxrwxrwx 1 root root 0 Jan 28 15:58 dma0chan3 -> ../../devices/platform/soc/
2c00000.edma/dma/dma0chan3
lrwxrwxrwx 1 root root 0 Jan 28 15:58 dma0chan30 -> ../../devices/platform/soc/
2c00000.edma/dma/dma0chan30
lrwxrwxrwx 1 root root 0 Jan 28 15:58 dma0chan31 -> ../../devices/platform/soc/
2c00000.edma/dma/dma0chan31
lrwxrwxrwx 1 root root 0 Jan 28 15:58 dma0chan4 -> ../../devices/platform/soc/
2c00000.edma/dma/dma0chan4
lrwxrwxrwx 1 root root 0 Jan 28 15:58 dma0chan5 -> ../../devices/platform/soc/
2c00000.edma/dma/dma0chan5
lrwxrwxrwx 1 root root 0 Jan 28 15:58 dma0chan6 -> ../../devices/platform/soc/
2c00000.edma/dma/dma0chan6
lrwxrwxrwx 1 root root 0 Jan 28 15:58 dma0chan7 -> ../../devices/platform/soc/
2c00000.edma/dma/dma0chan7
lrwxrwxrwx 1 root root 0 Jan 28 15:58 dma0chan8 -> ../../devices/platform/soc/
2c00000.edma/dma/dma0chan8
lrwxrwxrwx 1 root root 0 Jan 28 15:58 dma0chan9 -> ../../devices/platform/soc/
2c00000.edma/dma/dma0chan9
lrwxrwxrwx 1 root root 0 Jan 28 15:58 dma1chan0 -> ../../devices/platform/soc/1700000.crypto/caam-
dma/dma/dma1chan0
lrwxrwxrwx 1 root root 0 Jan 28 15:58 dma1chan1 -> ../../devices/platform/soc/1700000.crypto/caam-
dma/dma/dma1chan1
lrwxrwxrwx 1 root root 0 Jan 28 15:58 dma1chan2 -> ../../devices/platform/soc/1700000.crypto/caam-
dma/dma/dma1chan2
```

Component testing

To test both the SG and memcpy capability of the CAAM DMA driver use the dmatest module provided by the kernel.

Build dmatest

Build the dmatest utility as a module by running the command:

```
$ make menuconfig
```

Then select from the kernel menuconfig to build the dmatest.ko as a module:

```
Device Drivers --->
    <*> DMA Engine support --->
    <M>    DMA Test client
```

Configure dmatest

Before testing insert the module:

```
$ insmod dmatest.ko
```

The configure the dmatest. There is a general configuration that applies for both the sg and memcpy functionality:

```
$ echo 1 > /sys/module/dmatest/parameters/max_channels
$ echo 2000 > /sys/module/dmatest/parameters/timeout
$ echo 0 > /sys/module/dmatest/parameters/noverify
$ echo 4 > /sys/module/dmatest/parameters/threads_per_chan
$ echo 0 > /sys/module/dmatest/parameters/dmatest
```

```
$ echo 1 > /sys/module/dmatest/parameters/iterations
$ echo 2000 > /sys/module/dmatest/parameters/test_buf_size
```

The above configuration is self explanatory except a few:

If you set the 'noverify' parameter to 0 it will not perform check of the copied buffer at the end of each testing round. This should be used for performance testing. Set the 'noverify' parameter to 1 for functional testing.

Set the 'dmatest' parameter to 0 to test the memcpy functionality and to 1 to test the sg functionality.

Perform the test

To perform the test simply run the command:

```
$ echo 1 > /sys/module/dmatest/parameters/run
```

Depending on the type of test performed (sg/memcpy) the output may vary. Here is an example of output obtained with the above parameters:

```
[   72.113769] dmatest: Started 4 threads using dma0chan0
[   72.105334] dmatest: dma0chan0-copy0: summary 1 tests, 0 failures 9009 iops 9009 KB/s (0)
[   72.113649] dmatest: dma0chan0-copy1: summary 1 tests, 0 failures 119 iops 119 KB/s (0)
[   72.114927] dmatest: dma0chan0-copy2: summary 1 tests, 0 failures 24390 iops 0 KB/s (0)
[   72.115098] dmatest: dma0chan0-copy3: summary 1 tests, 0 failures 37037 iops 0 KB/s (0)
```

7.2.3 DCU Display Device Driver User Manual

Description

This manual describes how to use the Two Dimensional Animation and Compositing Engine (2D-ACE or DCU) and frame buffer on TWR-LS1021A board.

Module Loading

The DCU device driver supports kernel built-in and module.

U-Boot Configuration

Please use ‘ls1021atwr_lpuart_config’ to build the uboot.

Runtime options.

Env Variable	Description	Sub Option		Option Description
bootargs	Kernel command line argument passed to kernel	HDMI	console=ttyLP0,115200 hdmi	select LPUART0 as the system console
		LCD	console=ttyLP0,115200	

Kernel Configure Options

Tree View

Below are the Kernel Configure Tree View options need to be set/unset while doing "make menuconfig" for kernel and enable DCU/HDMI drivers and Linux Penguin Logo picture.

```
Device Drivers  --->

   < > Multimedia support  ----
       Graphics support  --->
           <*> Support for frame buffer devices  --->
               <*> Si Image SII9022 DVI/HDMI Interface Chip
               <*> Freescale DCU framebuffer support
                   …
           [ ] Exynos Video driver support  ----
           [ ] Backlight & LCD device support  ----
               Console display driver support  --->
                   <*> Framebuffer Console support
                   [*] Map the console to the primary display device
                   [*] Framebuffer Console Rotation
           [*] Bootup logo  --->
               --- Bootup logo
               [*] Standard black and white Linux logo
               [*] Standard 16-color Linux logo
               [*] Standard 224-color Linux logo
   < > Sound card support  ----
```

Identifier

Below are the configure identifiers which are used in kernel source code and default configuration files.

Special Configure needs to be enabled ("Y") for LS1021A. Please find in below table with default value as "N"

Option	Values	Default Value	Description
CONFIG_ FB_FSL_SII902X	y/m/n	y	Si Image SII9022 DVI/HDMI Interface Chip
CONFIG_FB_FSL_DCU	y/m/n	y	NXP DCU framebuffer supportt
CONFIG_LOGO	y/m/n	y	Bootup logo
CONFIG_LOGO_LINUX_MONO	y/m/n	y	Standard black and white Linux logo
CONFIG_LOGO_LINUX_VGA16	y/m/n	y	Standard 16-color Linux logo
CONFIG_LOGO_LINUX_CLUT224	y/m/n	y	Standard 224-color Linux logo
CONFIG_FRAMEBUFFER_CONSOLE	y/m/n	y	Framebuffer Console support

Device Tree Binding

Special Configure needs to be enabled ("Y") for LS1021A. Please find in below table with default value as "N"

The default configuration dsiplay through LCD, like below specified .

arch/arm/boot/dts/ls1021a.dtsi

```
dcu0: dcu@2ce0000 {
            compatible = "fsl,vf610-dcu";
             reg = <0x0 0x2ce0000 0x0 0x10000>;
             interrupts = <GIC_SPI 172 IRQ_TYPE_LEVEL_HIGH>;
             clocks = <&platform_clk 0>;
             clock-names = "dcu";
             scfg-controller = <&scfg>;
              big-endian;
              status = "disabled";
};
```

arch/arm/boot/dts/ls1021a-twr.dts

```
&dcu0 {
        display = <&display>;
        status = "okay";

        display: display@0 {
                bits-per-pixel = <24>;

                display-timings {
                        native-mode = <&timing0>;
                        timing0: nl4827hc19 {
                                clock-frequency = <10870000>;
                                hactive = <480>;
                                vactive = <272>;
                                hback-porch = <2>;
                                hfront-porch = <2>;
                                vback-porch = <2>;
                                vfront-porch = <2>;
                                hsync-len = <41>;
                                vsync-len = <4>;
                                hsync-active = <1>;
                                vsync-active = <1>;
                        };
                };
        };
};
```

Ramdisk:

Please use the 'fsl-image-x11-ls1021a(XXXXX)rootfs.ext2.gz.gz' ramdisk from each release images, or you can just use the ramdisk image which has 'x11' label.

If you want to HDMI display, change the following configuration:

```
arch/arm/boot/dts/ls1021a-twr.dtscan
diff --git
a/arch/arm/boot/dts/ls1021a-twr.dts b/arch/arm/boot/dts/ls1021a-twr.dtsindex
cc351e3..928d376 100644---
a/arch/arm/boot/dts/ls1021a-twr.dts+++
b/arch/arm/boot/dts/ls1021a-twr.dts@@ -122,7 +122,7
@@
port {
         dcu_out: endpoint {
-            remote-endpoint = <&panel_in>;
+            remote-endpoint = <&sii9022a_out>;
         };
```

```
     };
 };
@@ -204,6 +204,18 @@
         VDDIO-supply = <&reg_3p3v>;
         clocks = <&sys_mclk>;
     };
+
+    sii9022a: hdmi@39 {
+        compatible = "sil,sii9022";
+        reg = <0x39>;
+        interrupts = <GIC_SPI 167 IRQ_TYPE_EDGE_RISING>;
+
+        port@0 {
+            sii9022a_out: endpoint {
+                remote-endpoint = <&dcu_out>;
+            };
+        };
+    };
 };

 &ifc {
```

Source Files

The driver source is maintained in the Linux kernel source tree.

Source File	Description
drivers/video/fsl-dcu-fb.c	NXP DCU driver

Testing LCD/DHMI at Uboot Level

1. Display with LCD:

```
=> setenv video-mode  "fslfb:480x272-32@60,monitor=twr_lcd"
=> save
=> setenv stdout vga
```

2. Display with HDMI:

```
=> setenv video-mode  "fslfb:640x480-32@60,monitor=hdmi"
=> save
=> setenv stdout vga
```

Testing LCD at Kernel Level

1. Configure and rebuild the kernel as configuration list above, let the DCU driver built into the Kernel Image.
2. Boot up Linux kernel, upon the kernel has been uncompressed, the TFT Panel will display the Linux Penguin Logo.
3. And then after the root filesystem has been monted, and the Xwindows Desktop will be display.
4. Or also you can start the Xwindow using:

```
root@ls1021atwr:~# killall matchbox-window-manager
root@ls1021atwr:~# xinit /etc/init.d/xserver-nodm restart
```

5. Just plug out and plug in the HDMI to test the hot plug.

Testing HDMI at Kernel Level

1. 1.Configure and rebuild the kernel as configuration list above, let the HDMI and DCU drivers built into the Kernel Image.
2. Boot up Linux kernel, upon the kernel has been uncompressed, the TFT Panel won't display any picture correctly.
3. And then after the root filesystem has been monted, and the Xwindows Desktop will be displayed on the HDMI Monitor.
4. Or also you can start the Xwindow using:

```
root@ls1021atwr:~# killall matchbox-window-manager
root@ls1021atwr:~# xinit /etc/init.d/xserver-nodm restart

Note: Please unplugged the TWR-LDC_RGB daughter board when testing the
HDMI.
```

Known Bugs, Limitations, or Technical Issues

Unplug the SD card before testing the DCU/HDMI, or the system will hang.

7.2.4 Enhanced Secured Digital Host Controller (eSDHC)

Description

The enhanced secured host controller (eSDHC) provides an interface between the host system and the SD/SDIO cards and eMMC devices.

The eSDHC device driver supports either kernel built-in or module.

Kernel Configure Options

Tree View

Kernel Configure Options Tree View	Description
Device Drivers ---> <*> MMC/SD/SDIO card support ---> <*> MMC block device driver (8) Number of minors per block device [*] Use bounce buffer for simple hosts	Enables SD/MMC block device driver support
*** MMC/SD/SDIO Host Controller Drivers *** <*> Secure Digital Host Controller Interface support <*> SDHCI platform and OF driver helper [*] SDHCI OF support for the NXP eSDHC controller	Enables NXP eSDHC driver support

Compile-time Configuration Options

Option	Values	Default Value	Description
CONFIG_MMC	y/n	y	Enable SD/MMC bus protocol
CONFIG_MMC_BLOCK	y/n	y	Enable SD/MMC block device driver support
CONFIG_MMC_BLOCK_MINORS	integer	8	Number of minors per block device
CONFIG_MMC_BLOCK_BOUNCE	y/n	y	Enable continuous physical memory for transmit
CONFIG_MMC_SDHCI	y/n	y	Enable generic sdhc interface
CONFIG_MMC_SDHCI_PLTFM	y/n	y	Enable common helper function support for sdhci platform and OF drivers
CONFIG_MMC_SDHCI_OF_ESDHC	y/n	y	Enable NXP eSDHC support

Source Files

The driver source is maintained in the Linux kernel source tree.

Source File	Description
drivers/mmc/host/sdhci.c	Linux SDHCI driver support
drivers/mmc/host/sdhci-pltfm.c	Linux SDHCI platform devices support driver
drivers/mmc/host/sdhci-of-esdhc.c	Linux eSDHC driver

Device Tree Binding

Property	Type	Status	Description
compatible	String	Required	Should be 'fsl,esdhc'
reg	integer	Required	Register map

example:

```
esdhc: esdhc@1560000 {
    compatible = "fsl,ls1046a-esdhc", "fsl,esdhc";
    reg = <0x0 0x1560000 0x0 0x10000>;
    interrupts = <GIC_SPI 62 IRQ_TYPE_LEVEL_HIGH>;
    clocks = <&clockgen 2 1>;
    voltage-ranges = <1800 1800 3300 3300>;
    sdhci,auto-cmd12;
    big-endian;
    bus-width = <4>;
};
```

Verification in U-Boot

The U-Boot log

```
=> mmcinfo
Device: FSL_SDHC
Manufacturer ID: 74
OEM: 4a45
Name: SDC
Tran Speed: 50000000
Rd Block Len: 512
SD version 3.0
High Capacity: Yes
Capacity: 7.5 GiB
Bus Width: 4-bit
Erase Group Size: 512 Bytes
=> mw.l 81000000 11111111 100
=> mw.l 82000000 22222222 100
=> cmp.l 81000000 82000000 100
word at 0x0000000081000000 (0x11111111) != word at 0x0000000082000000 (0x22222222)
Total of 0 word(s) were the same
=> mmc write 81000000 0 2

MMC write: dev # 0, block # 0, count 2 ... 2 blocks written: OK
=> mmc read 82000000 0 2

MMC read: dev # 0, block # 0, count 2 ... 2 blocks read: OK
=> cmp.l 81000000 82000000 100
Total of 256 word(s) were the same
=>
```

Verification in Linux

Set U-Boot environment

```
=> setenv hwconfig sdhc
```

The linux booting log

```
......
[    3.913163] sdhci: Secure Digital Host Controller Interface driver
[    3.919339] sdhci: Copyright(c) Pierre Ossman
[    3.931467] sdhci-pltfm: SDHCI platform and OF driver helper
[    3.938900] sdhci-esdhc 1560000.esdhc: No vmmc regulator found
[    3.944728] sdhci-esdhc 1560000.esdhc: No vqmmc regulator found
[    3.978676] mmc0: SDHCI controller on 1560000.esdhc [1560000.esdhc] using ADMA 64-bit
[    4.197784] mmc0: new high speed SDHC card at address b368
[    4.203502] mmcblk0: mmc0:b368 SDC   7.45 GiB
```

Partition the card with fdisk

```
~# fdisk /dev/mmcblk0

Welcome to fdisk (util-linux 2.26.2).
Changes will remain in memory only, until you decide to write them.
Be careful before using the write command.

Device does not contain a recognized partition table.
Created a new DOS disklabel with disk identifier 0x5a5f34b3.
```

```
Command (m for help): n
Partition type
   p   primary (0 primary, 0 extended, 4 free)
   e   extended (container for logical partitions)
Select (default p):

Using default response p.
Partition number (1-4, default 1):
First sector (2048-15628287, default 2048):
Last sector, +sectors or +size{K,M,G,T,P} (2048-15628287, default 15628287):

Created a new partition 1 of type 'Linux' and of size 7.5 GiB.

Command (m for help): w
The partition table has been altered.
Calling ioctl() [  410.501876]  mmcblk0: p1
to re-read partition table.
Syncing disks.

~#
~# fdisk -l /dev/mmcblk0
Disk /dev/mmcblk0: 7.5 GiB, 8001683456 bytes, 15628288 sectors
Units: sectors of 1 * 512 = 512 bytes
Sector size (logical/physical): 512 bytes / 512 bytes
I/O size (minimum/optimal): 512 bytes / 512 bytes
Disklabel type: dos
Disk identifier: 0x5a5f34b3

Device         Boot Start      End  Sectors  Size Id Type
/dev/mmcblk0p1       2048 15628287 15626240  7.5G 83 Linux
```

Format the card with mkfs

```
~# mkfs.ext2 /dev/mmcblk0p1
mke2fs 1.42.9 (28-Dec-2013)
Discarding device blocks: [   37.611042] random: nonblocking pool is initialized
done
Filesystem label=
OS type: Linux
Block size=4096 (log=2)
Fragment size=4096 (log=2)
Stride=0 blocks, Stripe width=0 blocks
488640 inodes, 1953280 blocks
97664 blocks (5.00%) reserved for the super user
First data block=0
Maximum filesystem blocks=2000683008
60 block groups
32768 blocks per group, 32768 fragments per group
8144 inodes per group
Superblock backups stored on blocks:
        32768, 98304, 163840, 229376, 294912, 819200, 884736, 1605632

Allocating group tables: done
Writing inode tables: done
Writing superblocks and filesystem accounting information: done

~#
```

Mount, read, and write

```
~# mount /dev/mmcblk0p1 /mnt/
~# ls /mnt/
lost+found
~# cp -r /lib /mnt/
~# sync
~# ls /mnt/
lib  lost+found
~# umount /dev/mmcblk0p1
~# ls /mnt/
~#
```

Known Bugs, Limitations, or Technical Issues

1. Call trace of more than 120 seconds task blocking when running iozone to test card performance. This is not issue and use below command to disable the warning.

   ```
   echo 0 > /proc/sys/kernel/hung_task_timeout_secs
   ```

2. Layerscape boards could not provide a power cycle to SD card but according to SD specification, only a power cycle could reset the SD card working on UHS-I speed mode. When the card is on UHS-I speed mode, this hardware problem may cause unexpected result after board reset. The workaround is using power off/on instead of reset when using SD UHS-I card.
3. Transcend 8G class 10 SDHC card has some compatibility issue. It is observed it could not work on 50 MHz high-speed mode on LS2 boards, but other brand SD cards (Sandisk, Kingston, Sony ...) worked fine. Reducing SD clock frequency could also resolve the issue. The workaround is using other kind SD cards instead.
4. After sleep of LS1046ARDB, the card will get below interrupt timeout issue. This is hardware issue. CMD18 (multiple blocks read) has hardware interrupt timeout issue.

   ```
   mmc0: Timeout waiting for hardware interrupt.
   ```

5. Linux MMC stack does not have SD UHS-II support currently. It could not handle SD UHS-II card well. If UHS-I support is enabled in eSDHC dts node, the driver may make SD UHS-II card enter 1.8v mode. Only a power cycle could reset the card, so use power off/on instead of reset for SD UHS-II card if UHS-I support is enabled in eSDHC dts node.
6. For LS1012ARDB RevD and later versions, I2C reading for DIP switch setting is not reliable so U-Boot could not enable/disable SDHC2 automatically. If SDHC2 is used, "esdhc1" should be set in U-Boot hwconfig environment to enable it manually.
7. On LX2160A eSDHC1 for SD card, when eSDHC operates at 3.3 V, damage can accumulate in an internal level shifter at a higher than expected rate. The faster the interface runs, the more damage accumulates. The recommended hardware workaround is to use an on-board level shifter that is 1.8 V on SoC side and 3.3 V on SD card side. For current LX2160ARDB boards without hardware workaround, below U-Boot option could be enabled that ensures 1.8 V IO voltage and disables eSDHC if no card.

   ```
   CONFIG_FSL_ESDHC_33V_IO_RELIABILITY_WORKAROUND
   ```

   This option assumes no hotplug, and U-Boot has to make all the way to Linux to use 1.8 V UHS-I speed mode if has card. If user does not want the workaround, than user can choose not to select it, by running eSDHC in unsafe mode.

7.2.5 IEEE 1588/802.1AS

Description

IEEE 1588 is the IEEE standard for a precision clock synchronization protocol for networked measurement and control systems.

IEEE 802.1AS is the IEEE standard for local and metropolitan area networks – timing and synchronization for time-sensitive applications in bridged local area networks. It specifies the use of IEEE 1588 specifications where applicable in the context of IEEE Std 802.1D-2004 and IEEE Std 802.1Q-2005.

The components required to run IEEE 1588/802.1AS protocol are:

1. Linux hardware time stamping support on Ethernet controller driver
2. Linux PTP Hardware Clock (PHC) driver for 1588 timer
3. A software stack application for IEEE 1588/802.1AS (linuxptp is used for LSDK)

Kernel configure options

Tree view

1. eTSEC

Kernel configure tree view options	Description

`Device Drivers  --->`
`  PTP clock support  --->`
`    <*> Freescale QorIQ 1588 timer as PTP clock`
	QorIQ PTP clock driver

2. DPAA SDK

Kernel configure tree view options	Description

`Device Drivers  --->`
`  PTP clock support  --->`
`    <*> Freescale QorIQ 1588 timer as PTP clock`
	QorIQ PTP clock driver

`Device Drivers --->`
`  [*] Network device support --->`
`    [*] Ethernet driver support --->`
`      [*]  Freescale devices`
`      <*>     DPAA Ethernet --->`
`        [*] Linux compliant timestamping`
	Hawdware timestamping support for DPAA SDK driver

3. DPAA2

Kernel configure tree view options	Description

`Device Drivers  --->`
`  [*] Network device support  --->`
`    [*] Ethernet driver support  --->`
`      [*] Freescale devices`
	DPAA2 PTP clock driver

Kernel configure tree view options	Description
<*> Freescale DPAA2 Ethernet <*> Freescale DPAA2 PTP clock	

4. ENETC

Kernel configure tree view options	Description
Device Drivers ---> [*] Network device support ---> [*] Ethernet driver support ---> [*] Freescale devices <*> ENETC PTP clock driver [*] ENETC hardware timestamping support	ENETC PTP clock driver, and hardware time stamping support

5. Felix switch

Kernel configure tree view options	Description
Device Drivers ---> [*] Network device support ---> [*] Ethernet driver support ---> [*] Microsemi devices <*> FELIX switch driver [*] FELIX switch PTP clock driver	Felix PTP clock driver

Compile-time configuration options

1. eTSEC

Option	Values	Default Value	Description
CONFIG_GIANFAR	y/n/m	y	eTSEC Ethernet driver
CONFIG_PTP_1588_CLOCK_QORIQ	y/n/m	y	QorIQ PTP clock driver

2. DPAA SDK

Option	Values	Default Value	Description
CONFIG_FSL_SDK_DPAA_ETH	y/n/m	y	DPAA SDK Ethernet driver
CONFIG_FSL_DPAA_TS	y/n	n	DPAA hardware timestamping
CONFIG_PTP_1588_CLOCK_QORIQ	y/n/m	y	QorIQ PTP clock driver

3. DPAA2

Option	Values	Default Value	Description
CONFIG_FSL_DPAA2_ETH	y/n/m	y	DPAA2 Ethernet driver
CONFIG_FSL_DPAA2_PTP_CLOCK	y/n/m	y	DPAA2 PTP clock driver

4. ENETC

Option	Values	Default value	Description
CONFIG_FSL_ENETC	y/n/m	y	ENETC Ethernet driver
CONFIG_FSL_ENETC_HW_TIMESTAMPING	y/n	n	ENETC hardware timestamping
CONFIG_FSL_ENETC_PTP_CLOCK	y/n/m	y	ENETC PTP clock driver

5. Felix switch

Option	Values	Default value	Description
CONFIG_MSCC_FELIX_SWITCH	y/n/m	y	Felix switchdev driver
CONFIG_MSCC_FELIX_SWITCH_PTP_CLOCK	y/n/m	y	Felix PTP clock driver

Source files

The driver source is maintained in the Linux kernel source tree.

1. eTSEC

Source File	Description
drivers/net/ethernet/freescale/gianfar.c	eTSEC Ethernet driver
drivers/ptp/ptp_qoriq.c	QorIQ PTP clock driver

2. DPAA SDK

Source File	Description
drivers/net/ethernet/freescale/sdk_dpaa/dpaa_eth.c	DPAA SDK Ethernet driver
drivers/ptp/ptp_qoriq.c	QorIQ PTP clock driver

3. DPAA2

Source File	Description
drivers/net/ethernet/freescale/dpaa2/dpaa2-eth.c	DPAA2 Ethernet driver
drivers/net/ethernet/freescale/dpaa2/dpaa2-ptp.c	DPAA2 PTP clock driver

4. ENETC

Source file	Description
drivers/net/ethernet/freescale/enetc/enetc.c	ENETC Ethernet driver
drivers/net/ethernet/freescale/enetc/enetc_ptp.c	ENETC PTP clock driver

5. Felix switch

Source file	Description
drivers/net/ethernet/mscc/felix_board.c	Felix switchdev driver
drivers/net/ethernet/mscc/felix_ptp.c	Felix PTP clock driver

Device tree binding

1. eTSEC/DPAA SDK/DPAA2/ENETC

Property	Type	Status	Description
compatible	String	Required	“fsl,etsec-ptp”, “fsl,fman-ptp-timer”, "fsl,dpaa2-ptp" or "fsl,enetc-ptp"
reg	Integer	Required	Register map

2. Felix switch

   NA.

Verification in Linux

- Verify PPS signal

  Check PTP clock and timestamping on Ethernet interface (for example, eth1) to make sure PTP hardware clock and hardware timestamping is supported.

```
$ ethtool -T eth1
Time stamping parameters for eth1:
Capabilities:
        hardware-transmit     (SOF_TIMESTAMPING_TX_HARDWARE)
        hardware-receive      (SOF_TIMESTAMPING_RX_HARDWARE)
        hardware-raw-clock    (SOF_TIMESTAMPING_RAW_HARDWARE)
PTP Hardware Clock: 1
Hardware Transmit Timestamp Modes:
        off                   (HWTSTAMP_TX_OFF)
        on                   (HWTSTAMP_TX_ON)
Hardware Receive Filter Modes:
        none                 (HWTSTAMP_FILTER_NONE)
        all                    (HWTSTAMP_FILTER_ALL)
```

  With the PTP Hardware Clock index (which is 1) got above, enable PPS for ptp1 and check PPS events on corresponding pps device. For below results, the value from assert file include the system time stamp and the index of PPS event which should be generated 1 time every second by 1588 timer.

```
$ echo 1 > /sys/class/ptp/ptp1/pps_enable
$ cat /sys/class/pps/pps0/name
ptp1
```

```
$
$ cat /sys/class/pps/pps0/assert
1565664214.005379914#23588
$ cat /sys/class/pps/pps0/assert
1565664215.005378275#23589
$ cat /sys/class/pps/pps0/assert
1565664216.006380913#23590
```

- Verify synchronization between two ordinary clocks

  Ordinary clock has a single Precision Time Protocol (PTP) port in a domain and maintains the timescale used in the domain. So, two boards are needed for ordinary clocks synchronization.

  Connect Ethernet interfaces of two boards in back-to-back way and use ping test to make sure the connection. (For example, eth0 to eth0.) One board will run as master and the other board will run as slave for clock synchronization.

  Run below command on two boards, and check synchronization result on slave side. (One board will be selected as slave automatically.) See step "Clock synchronization result example" for synchronization result.

  ```
  # ptp4l -i eth0 -m
  ```

- Verify synchronization with boundary clock

  Boundary clock has multiple Precision Time Protocol (PTP) ports in a domain and maintains the timescale used in the domain.

  This case needs at least three boards. For three boards case, one board which will work as boundary clock provides two Ethernet interfaces (for example, eth0 and eth1) to connect to the other two boards' Ethernet interfaces (for example, eth0) in back-to-back way. The other two board using only one Ethernet interface will work as ordinary clocks. (With boundary clock which could support multiple interfaces, the test case could extend to more boards or even a ptp network.)

  Run below command on ordinary clocks.

  ```
  # ptp4l -i eth0 -m
  ```

  Run below command on boundary clock.

  ```
  # ptp4l -i eth0 -i eth1 -m
  ```

  One board will be selected as master and the other two boards will be slaves automatically. Check synchronization result on slave side. See step "Clock synchronization result example" for synchronization result.

- Verify IEEE 802.1AS end-stations synchronization

  End-station is a device type of IEEE 802.1AS. It is similar with IEEE 1588 ordinary clock which has a single PTP port. Two boards are needed for end-station synchronization.

  Connect Ethernet interfaces of two boards in back-to-back way. (For example, eth0 to eth0.) One board will run as master and the other board will run as slave for clock synchronization. The difference from ordinary clocks synchronization testing is below configuration file is used.

  /usr/share/doc/linuxptp/gPTP.cfg (options below should be changed properly)

Option	Value	Description
neighborPropDelayThresh	20000000	800 for gPTP is not enough considering propagation delay includes phy delay because of hardware using MAC timestamping. Use default 20000000 for testing.

Table continues on the next page...

Table continued from the previous page...

summary_interval	-3	To print statistics of time offset and path delay on slave side.

Run below command on two boards, and check synchronization result on slave side. (One board will be selected as slave automatically.)

```
# ptp4l -i eth0 -f /usr/share/doc/linuxptp/gPTP.cfg -m
```

- Clock synchronization result example

  The slave side would report clock synchronization result. Below is an example.

```
ptp4l[878.504]: master offset        -10 s2 freq   -2508 path delay      1826
ptp4l[878.629]: master offset         -5 s2 freq   -2502 path delay      1826
ptp4l[878.754]: master offset          0 s2 freq   -2495 path delay      1826
ptp4l[878.879]: master offset          9 s2 freq   -2482 path delay      1826
ptp4l[879.004]: master offset         -9 s2 freq   -2507 path delay      1826
ptp4l[879.129]: master offset        -24 s2 freq   -2530 path delay      1826
ptp4l[879.255]: master offset         -7 s2 freq   -2508 path delay      1826
ptp4l[879.380]: master offset         -2 s2 freq   -2502 path delay      1826
ptp4l[879.505]: master offset        -17 s2 freq   -2524 path delay      1827
ptp4l[879.630]: master offset          6 s2 freq   -2493 path delay      1827
ptp4l[879.755]: master offset          6 s2 freq   -2492 path delay      1827
ptp4l[879.880]: master offset          0 s2 freq   -2500 path delay      1827
```

NOTE

- The interfaces connected to each other should not use same MAC address.
- If `ptp4l` (`linuxptp`) hasn't been installed in ubuntu rootfs, install it. Also, stop and disable `ptp4l.service` in case of failure; since this needs to be written by user according to practical requirement. `ptp4l` version was v1.8 for LSDK verification.

```
# apt update
# apt install linuxptp
# systemctl stop ptp4l.service
# systemctl disable ptp4l.service
```

- For Felix switch, configure switch to CPU port with/without bridge mode before running linuxptp. If switch is configured to CPU port with bridge mode which works at L2 Ethernet layer, linuxptp should only run with L2 Ethernet protocol, which needs an additional "-2" option, for example.

```
# ptp4l -i eth0 -2 -m
```

- To configure one board work as grand master. The option priority1 (0~255, the default is 128) could be configured. Lower values take precedence. For example, in "verification synchronization between two ordinary clocks" case, below commands will make the board1 run as master.

```
Board1:
# cat master.cfg
[global]
priority1  127
# ptp4l -i eth0 -f master.cfg -m

Board2:
# ptp4l -i eth0 -m
```

Known Bugs, limitations, or technical issues

- There will be kernel smmu error issue for ptp4l running when using upstream version DPAA driver. The workaround is to set u-boot bootargs as shown below:

```
# setenv bootargs iommu.passthrough=1 $bootargs
```

- ptp4l v1.8 reports incorrect best master clock ID, when a clock is joining to work as grand master, but this doesn't affect function. See below log, the board is joining to work as grand master while the best master clock ID reported is a foreign clock.

```
# ptp4l -i eth0 -m
ptp4l[8279.742]: selected /dev/ptp1 as PTP clock
ptp4l[8279.796]: driver changed our HWTSTAMP options
ptp4l[8279.796]: tx_type   1 not 1
ptp4l[8279.796]: rx_filter 1 not 12
ptp4l[8279.796]: port 1: INITIALIZING to LISTENING on INITIALIZE
ptp4l[8279.797]: port 0: INITIALIZING to LISTENING on INITIALIZE
ptp4l[8279.840]: port 1: link up
ptp4l[8280.675]: port 1: new foreign master 00049f.fffe.05c32d-1
ptp4l[8284.675]: selected best master clock 00049f.fffe.05c32d
ptp4l[8284.676]: assuming the grand master role
ptp4l[8284.676]: port 1: LISTENING to GRAND_MASTER on RS_GRAND_MASTER
```

7.2.6 Integrated Flash Controller (IFC)

7.2.6.1 Integrated Flash Controller NOR Flash User Manual

Description

NXP’s Integrated Flash Controller can be used to connect various types of flashes e.g. NOR/NAND on board for boot functionality as well as data storage.

U-Boot Configuration

Compile time options

Below are major u-boot configuration options related to this feature defined in platform specific config files under include/configs/ directory.

Option Identifier	Description
CONFIG_FSL_IFC	Enable IFC support
CONFIG_FLASH_CFI_DRIVER CONFIG_SYS_FLASH_CFI CONFIG_SYS_FLASH_EMPTY_INFO	Enable CFI Driver for NOR Flash devices

Source Files

The following source files are related to this feature in u-boot.

Source File	Description
./drivers/misc/fsl_ifc.c	Set up the different chip select parameters from board header file
drivers/mtd/cfi_flash.c	CFI driver support for NOR flash devices

Kernel Configure Options

Tree View

Below are the configure options need to be set/unset while doing "make menuconfig" for kernel

Kernel Configure Tree View Options	Description
Device Drivers ---> <*> Memory Technology Device (MTD) support ---> [*] MTD partitioning support [*] Command line partition table parsing <*> Flash partition map based on OF description <*> Direct char device access to MTD devices -*- Common interface to block layer for MTD 'translation layers' <*> Caching block device access to MTD devices < > FTL (Flash Translation Layer) support RAM/ROM/Flash chip drivers ---> <*> Detect flash chips by Common Flash Interface (CFI) probe <*> Support for Intel/Sharp flash chips <*> Support for AMD/Fujitsu/ Spansion flash chips Mapping drivers for chip access --->	These options enable CFI support for NOR Flash under MTD subsystem and Integrated Flash Controller support on Linux

Table continues on the next page...

Table continued from the previous page...

Kernel Configure Tree View Options	Description
<*> Flash device in physical memory map based on OF description	
File systems ---> [*] Miscellaneous filesystems ---> <*> Journalling Flash File System v2 (JFFS2) support	This option enables JFFS2 file system support for MTD Devices

Identifier

Below are the configure identifiers which are used in kernel source code and default configuration files.

Special Configure needs to be enabled("Y") for LS1021. Please find in below table with default value as "N"

Option	Values	Default Value	Description
CONFIG_FSL_IFC	Y/N	Y	Integrated Flash Controller support
CONFIG_MTD	Y/N	Y	Memory Technology Device (MTD) support
CONFIG_MTD_PARTITIONS	Y/N	Y	MTD partitioning support
CONFIG_MTD_CMDLINE_PARTS	Y/N	Y	Allow generic configuration of the MTD partition tables via the kernel command line.
CONFIG_MTD_OF_PARTS	Y/N	Y	This provides a partition parsing function which derives the partition map from the children of the flash nodes described in Documentation/powerpc/booting-without-of.txt
CONFIG_MTD_CHAR	Y/N	Y	Direct char device access to MTD devices
CONFIG_MTD_BLOCK	Y/N	Y	Caching block device access to MTD devices
CONFIG_MTD_CFI	Y/N	Y	Detect flash chips by Common Flash Interface (CFI) probe
CONFIG_MTD_GEN_PROBE	Y/N	Y	NA
CONFIG_MTD_MAP_BANK_WIDTH_1	Y/N	Y	Support 8-bit buswidth

Table continues on the next page...

Table continued from the previous page...			
Option	**Values**	**Default Value**	**Description**
CONFIG_MTD_MAP_BANK_WIDTH_2	Y/N	Y	Support 16-bit buswidth
CONFIG_MTD_MAP_BANK_WIDTH_4	Y/N	Y	Support 32-bit buswidth
CONFIG_MTD_PHYSMAP_OF	Y/N	Y	Flash device in physical memory map based on OF description
CONFIG_FTL	Y/N	N	FTL (Flash Translation Layer) support
CONFIG_MTD_CFI_INTELEXT	Y/N	Y	Support for Intel/Sharp flash chips
CONFIG_MTD_CFI_AMDSTD	Y/N	Y	Support for AMD/Fujitsu/ Spansion flash chips

Device Tree Binding

Documentation/devicetree/bindings/powerpc/fsl/ifc.txt

Documentation/devicetree/bindings/memory-controllers/fsl/ifc.txt

Flash partitions are specified by platform device tree.

Source Files

The driver source is maintained in the Linux kernel source tree.

Source File	Description
drivers/memory/fsl_ifc.c	Integrated Flash Controller driver to handle error interrupts
drivers/mtd/mtdpart.c	Simple MTD partitioning layer
drivers/mtd/mtdblock.c	Direct MTD block device access
drivers/mtd/mtdchar.c	Character-device access to raw MTD devices.
drivers/mtd/ofpart.c	Flash partitions described by the OF (or flattened) device tree
drivers/mtd/ftl.c	FTL (Flash Translation Layer) support
drivers/mtd/chips/cfi_probe.c	Common Flash Interface probe
drivers/mtd/chips/cfi_util.c	Common Flash Interface support
drivers/mtd/chips/cfi_cmdset_0001.c	Support for Intel/Sharp flash chips
drivers/mtd/chips/cfi_cmdset_0002.c	Support for AMD/Fujitsu/Spansion flash chips

Verification in U-Boot

Test the Read/Write/Erase functionality of NOR Flash

1. Boot the u-boot with above config options to get NOR Flash access enabled. Check this in boot log,

```
FLASH: * MiB
```

where * is the size of NOR Flash

2. Erase NOR Flash
3. Make test pattern on memory e.g. DDR
4. Write test pattern on NOR Flash
5. Read the test pattern from NOR Flash to memory e.g DDR
6. Compare the test pattern data to verify functionality.

Test Log :

Test log with initial u-boot log removed

```
--
--

FLASH: 128 MiB

--
--
/* u-boot prompt */
=> mw.b 80000000 0xa5 10000
=> md 80000000
80000000: a5a5a5a5 a5a5a5a5 a5a5a5a5 a5a5a5a5    ................
80000010: a5a5a5a5 a5a5a5a5 a5a5a5a5 a5a5a5a5    ................
80000020: a5a5a5a5 a5a5a5a5 a5a5a5a5 a5a5a5a5    ................
80000030: a5a5a5a5 a5a5a5a5 a5a5a5a5 a5a5a5a5    ................
=> protect off all
Un-Protect Flash Bank # 1
=> erase 0x584100000 +0x10000

. done
Erased 1 sectors
=> cp.b 80000000 0x584100000 10000
Copy to Flash... 9....8....7....6....5....4....3....2....1....done
=> cmp.b 80000000 0x584100000 10000
Total of 65536 bytes were the same
=>
```

Verification in Linux

To cross check whether IFC NOR driver has been configured in the kernel or not, see the kernel boot log with following entries. Please note mtd partition number can be changed depending upon device tree.

```
[    2.368207] 60000000.nor: Found 1 x16 devices at 0x0 in 16-bit bank. Manufacturer ID 0x000001 Chip
ID 0x002801
[    2.378219] Amd/Fujitsu Extended Query Table at 0x0040
[    2.383374]   Amd/Fujitsu Extended Query version 1.3.
[    2.388427] number of CFI chips: 1
[    2.391835] 8 cmdlinepart partitions found on MTD device 60000000.nor
[    2.398277] Creating 8 MTD partitions on "60000000.nor":
[    2.403591] 0x000000000000-0x000000100000 : "nor_bank0_rcw"
[    2.409553] 0x000000100000-0x000001000000 : "nor_bank0_uboot"
[    2.415653] 0x000001000000-0x000002000000 : "nor_bank0_kernel"
[    2.421839] 0x000002000000-0x000004000000 : "nor_bank0_rootfs"
[    2.428027] 0x000004000000-0x000004100000 : "nor_bank4_rcw"
[    2.433948] 0x000004100000-0x000005000000 : "nor_bank4_uboot"
```

```
[    2.440043] 0x000005000000-0x000006000000 : "nor_bank4_kernel"
[    2.446228] 0x000006000000-0x000008000000 : "nor_bank4_rootfs"
```

Note: NOR address and number of partition will vary from SoC to SoC supported in LSDK

To verify NOR flash device accesses see the following test,

```
[root@ root]# cat /proc/mtd
dev:    size   erasesize  name
mtd0: 00100000 00020000 "nor_bank0_rcw"
mtd1: 00f00000 00020000 "nor_bank0_uboot"
mtd2: 01000000 00020000 "nor_bank0_kernel"
mtd3: 02000000 00020000 "nor_bank0_rootfs"
mtd4: 00100000 00020000 "nor_bank4_rcw"
mtd5: 00f00000 00020000 "nor_bank4_uboot"
mtd6: 01000000 00020000 "nor_bank4_kernel"
mtd7: 02000000 00020000 "nor_bank4_rootfs"
mtd8: 01000000 00040000 "nand_uboot"
mtd9: 01000000 00040000 "nand_kernel"
mtd10: 02000000 00040000 "nand_free"
mtd11: 00600000 00001000 "uboot"
mtd12: 00a00000 00001000 "free"
mtd13: 00080000 00001000 "spi0.1"
mtd14: 00800000 00001000 "spi0.2"

[root@ root]# flash_eraseall -j /dev/mtd2

Erasing 128 Kibyte @ 1400000 -- 100% complete. Cleanmarker written at 13e0000.

[root@P1010RDB root]# mount -t jffs2 /dev/mtdblock2 /mnt/

JFFS2 notice: (1202) jffs2_build_xattr_subsystem: complete building xattr subsystem, 0 of xdatum (0
unchecked, 0 orphan) and 0 of xref (0 dead, 0 orphan) found.

[root@ root]# cd /mnt/

[root@ mnt]# ls -l

[root@ mnt]# touch flash_file

[root@ root]# umount mnt
//ls must list local_file
[root@ root]# ls mnt
//mount again
[root@ root]# mount -t  jffs2 /dev/mtdblock2 /mnt/
JFFS2 notice: (1219) jffs2_build_xattr_subsystem: complete building xattr subsystem, 0 of xdatum (0
unchecked, 0 orphan) and 0 of xref (0 dead, 0 orphan) found.
//use ls ; it must show the created file
[root@ root]# ls /mnt/
flash_file
//unmount
[root@ root]# umount /mnt/
```

7.2.6.2 Integrated Flash Controller NAND Flash User Manual

Description

NXP's Integrated Flash Controller can be used to connect various types of flashes (e.g. NOR/NAND) on board for boot functionality as well as data storage.

U-Boot Configuration

Compile time options

Below are major U-Boot configuration options related to this feature defined in platform specific config files under include/configs/ directory.

Option Identifier	Description
CONFIG_FSL_IFC	Enable IFC support
CONFIG_NAND_FSL_IFC	Enable NAND Machine support on IFC
CONFIG_SYS_MAX_NAND_DEVICE	No of NAND Flash chips on platform
CONFIG_MTD_NAND_VERIFY_WRITE	Verify NAND flash writes
CONFIG_CMD_NAND	Enable various commands support for NAND Flash
CONFIG_SYS_NAND_BLOCK_SIZE	Block size of the NAND flash connected on Platform

Source Files

The following source files are related to this feature in u-boot.

Source File	Description
./drivers/misc/fsl_ifc.c	Set up the different chip select parameters from board header file
drivers/mtd/nand/fsl_ifc_nand.c	IFC nand flash machine driver file

Kernel Configure Options

Tree View

Below are the configure options need to be set/unset while doing "make menuconfig" for kernel

Kernel Configure Tree View Options	Description

Device Drivers --->
  <*> Memory Technology Device (MTD) support --->
  [*] MTD partitioning support
  [*] Command line partition table
	These options enable Integrated Flash Controller NAND support to work with MTD subsystem available on Linux.
	Also UBIFS support needs to be enabled.

Kernel Configure Tree View Options	Description

parsing=
 	
     <*>   Flash partition map based on OF description
 	
     <*>   Direct char device access to MTD devices
 	
     -*- Common interface to block layer for MTD 'translation layers'
 	
     <*>   Caching block device access to MTD devices
 	
     <*>   NAND Device Support --->
 	
        <*>   NAND support for Freescale IFC controller
 	
Enable UBIFS filesystem in linux configuration
 	
Device Drivers --->
 	
        <*> Memory Technology Device (MTD) support --->
 	
       UBI - Unsorted block images --->
 	
  <*> Enable UBI
 	
  (4096) UBI wear-leveling threshold
 	
  (1)   Percentage of reserved eraseblocks for bad eraseblocks handling
 	
  < >   MTD devices emulation driver (gluebi)
 	
          *** UBI debugging options ***
 	
  [ ] UBI debugging	

Kernel Configure Tree View Options	Description
File systems ---> [*] Miscellaneous filesystems ---> <*> UBIFS file system support [*] Extended attributes support [ ] Advanced compression options [ ] Enable debugging	

Identifier

Below are the configure identifiers which are used in kernel source code and default configuration files.

Option	Values	Default Value	Description
CONFIG_FSL_IFC	y/n	y	Enable Integrated Flash Controller support
CONFIG_MTD_NAND_FSL_IFC	y/n	Y	Enable Integrated Flash Controller NAND Machine support
CONFIG_MTD_PARTITIONS	y/n	Y	MTD partitioning support
CONFIG_MTD_CMDLINE_PARTS	y/n	Y	Allow generic configuration of the MTD partition tables via the kernel command line.
CONFIG_MTD_OF_PARTS	y/n	Y	This provides a partition parsing function which derives the partition map from the children of the flash nodes described in Documentation/powerpc/booting-without-of.txt
CONFIG_MTD_CHAR	y/n	Y	Direct char device access to MTD devices
CONFIG_MTD_BLOCK	y/n	Y	Caching block device access to MTD devices
CONFIG_MTD_GEN_PROBE	y/n	Y	NA
CONFIG_MTD_PHYSMAP_OF	y/n	Y	Flash device in physical memory map based on OF description

Device Tree Binding

`Documentation/devicetree/bindings/memory-controllers/fsl/ifc.txt`

Flash partitions are specified by platform device tree.

Source Files

The driver source is maintained in the Linux kernel source tree.

Source File	Description
drivers/memory/fsl_ifc.c	Integrated Flash Controller driver to handle error interrupts
drivers/mtd/nand/fsl_ifc_nand.c	Integrated Flash Controller NAND Machine driver
include/linux/fsl_ifc.h	IFC Memory Mapped Registers

Verification in U-Boot

Test the Read/Write/Erase functionality of NAND Flash

1. Boot the u-boot with above config options to get NAND Flash driver enabled. Check this in boot log,

   ```
   NAND: * MiB

   Where * is NAND flash size
   ```

2. Erase NAND Flash
3. Make test pattern on memory e.g. DDR
4. Write test pattern on NAND Flash
5. Read the test pattern from NAND Flash to memory e.g DDR
6. Compare the test pattern data to verify functionality.

Test Log :

```
...
...

NAND:  512 MiB

...
...

/* U-boot prompt */
=> nand erase.chip



NAND erase.chip: device 0 whole chip

Bad block table found at page 65504, version 0x01 Bad block table found at page 65472, version 0x01

Skipping bad block at  0x01ff0000


Skipping bad block at  0x01ff4000


Skipping bad block at  0x01ff8000
```

```
Skipping bad block at  0x01ffc000



OK

=> mw.b 80000000 0xa5 100000

=> md 80000000

80000000: a5a5a5a5 a5a5a5a5 a5a5a5a5 a5a5a5a5   ................

80000010: a5a5a5a5 a5a5a5a5 a5a5a5a5 a5a5a5a5   ................

80000020: a5a5a5a5 a5a5a5a5 a5a5a5a5 a5a5a5a5   ................

80000030: a5a5a5a5 a5a5a5a5 a5a5a5a5 a5a5a5a5   ................

=> nand write 80000000 0 100000



NAND write: device 0 offset 0x0, size 0x100000

 1048576 bytes written: OK

=> nand read 90000000 0 100000



NAND read: device 0 offset 0x0, size 0x100000

 1048576 bytes read: OK

=>  cmp.b 80000000 90000000 100000

Total of 1048576 bytes were the same
```

Verification in Linux

To cross check whether IFC NAND driver has been configured in the kernel or not, check the following. Please note mtd partition numbers can be changed depending upon board device tree

```
[root@(none) root]# cat /proc/mtd
dev:    size   erasesize  name
mtd0: 00100000 00020000 "nor_bank0_rcw"
mtd1: 00f00000 00020000 "nor_bank0_uboot"
mtd2: 01000000 00020000 "nor_bank0_kernel"
mtd3: 02000000 00020000 "nor_bank0_rootfs"
mtd4: 01000000 00040000 "nand_uboot"
mtd5: 01000000 00040000 "nand_kernel"
mtd6: 02000000 00040000 "nand_free"


[root@(none) root]# flash_eraseall /dev/mtd4 Erasing 16 Kibyte @ f00000 -- 100% complete.
```

```
[root@(none) root]# ubiattach /dev/ubi_ctrl -m 4

UBI: attaching mtd4 to ubi0

UBI: physical eraseblock size:   16384 bytes (16 KiB)

UBI: logical eraseblock size:    15360 bytes

UBI: smallest flash I/O unit:    512

UBI: VID header offset:          512 (aligned 512)

UBI: data offset:                1024

UBI: empty MTD device detected

UBI: create volume table (copy #1)

UBI: create volume table (copy #2)

UBI: attached mtd4 to ubi0

UBI: MTD device name:            "NAND Root File System"

UBI: MTD device size:            15 MiB

UBI: number of good PEBs:        960

UBI: number of bad PEBs:         0

UBI: max. allowed volumes:       89

UBI: wear-leveling threshold:    4096

UBI: number of internal volumes: 1

UBI: number of user volumes:     0

UBI: available PEBs:            947

UBI: total number of reserved PEBs: 13

UBI: number of PEBs reserved for bad PEB handling: 9

UBI: max/mean erase counter: 0/0

UBI: image sequence number: 0

UBI: background thread "ubi_bgt0d" started, PID 7541 UBI device number 0, total 960 LEBs (14745600
bytes, 14.1 MiB), available 947 LEBs (14545920 bytes, 13.9 MiB), LEB size 15360 bytes (15.0 KiB)



[root@(none) root]# ubimkvol /dev/ubi0 -N rootfs -s 14205KiB Volume ID 0, size 947 LEBs (14545920
bytes, 13.9 MiB), LEB size 15360 bytes (15.0 KiB), dynamic, name "rootfs", alignment 1



[root@(none) root]# mount -t ubifs /dev/ubi0_0 /mnt/
```

```
UBIFS: default file-system created

UBIFS: mounted UBI device 0, volume 0, name "rootfs"

UBIFS: file system size:   14361600 bytes (14025 KiB, 13 MiB, 935 LEBs)
UBIFS: journal size:       721920 bytes (705 KiB, 0 MiB, 47 LEBs)

UBIFS: media format:       w4/r0 (latest is w4/r0)

UBIFS: default compressor: lzo

UBIFS: reserved for root:  678333 bytes (662 KiB)



[root@(none) root]# cd /mnt/

[root@(none) mnt]# ls

[root@(none) mnt]# touch flash_file

[root@(none) mnt]# ls -l

total 0

-rw-r--r-- 1 root root 0 Jul  6 14:45 flash_file

[root@(none) mnt]# cd

[root@(none) root]# umount /mnt/

UBIFS: un-mount UBI device 0, volume 0



[root@(none) root]# mount -t ubifs /dev/ubi0_0 /mnt/

UBIFS: mounted UBI device 0, volume 0, name "rootfs"

UBIFS: file system size:   14361600 bytes (14025 KiB, 13 MiB, 935 LEBs)
UBIFS: journal size:       721920 bytes (705 KiB, 0 MiB, 47 LEBs)

UBIFS: media format:       w4/r0 (latest is w4/r0)

UBIFS: default compressor: lzo

UBIFS: reserved for root:  678333 bytes (662 KiB)



[root@(none) root]# ls -l /mnt/

total 0

-rw-r--r-- 1 root root 0 Jul  6 14:45 flash_file
```

Known Bugs, Limitations, or Technical Issues

Boards which have NAND Flash with 512byte page size, JFFS2 cannot be supported using H/W ECC support of IFC , as there is not enough remaining space in the OOB area.

To use JFFS2 use SOFT ECC.

7.2.7 Low Power Universal Asynchronous Receiver/Transmitter (LPUART)

Description

Low Power Universal asynchronous receiver/transmitter (LPUART) is a high speed and low-power UART. Refer to below table for the NXP SoCs that can support LPUART.

SoC	Num of LPUART module
LS1021A	6
LS1043A	6

U-Boot ConfigurationCompile time options

Below are major U-Boot configuration options related to this feature defined in platform specific config files under include/ configs/ directory.

Option Identifier	Description
CONFIG_LPUART	Enable LPUART support
CONFIG_FSL_LPUART	Enable NXP LPUART support
CONFIG_LPUART_32B_REG	Select 32-bit LPUART register mode

Choosing predefined U-Boot board configs:

Please make the defconfig include 'lpuart', such as: ls1021atwr_nor_lpuart_defconfig. This will support LPUART.

Runtime options

Env Variable	Env Description	Sub option	Option Description
bootargs	Kernel command line argument passed to kernel	console=ttyLP0,1152000	select LPUART0 as the system console

Kernel Configure Options

Tree View

Below are the configure options need to be set/unset while doing "make menuconfig" for kernel

Kernel Configure Tree View Options	Description
`Device Drivers --->` `  Character devices --->`	LPUART driver and enable console support

Kernel Configure Tree View Options	Description
Serial drivers ---> <*> Freescale lpuart serial port support [*] Console on Freescale lpuart serial port	

Identifier

Below are the configure identifiers which are used in kernel source code and default configuration files.

Option	Values	Default Value	Description
CONFIG_SERIAL_FSL_LPUART	y/m/n	n	LPUART Driver

Device Tree Binding

Below is an example device tree node required by this feature. Note that it may have differences among platforms.

```
lpuart0: serial@2950000 {
                        compatible = "fsl,vf610-lpuart";
                        reg = <0x0 0x2950000 0x0 0x1000>;
                        interrupts = <GIC_SPI 80 IRQ_TYPE_LEVEL_HIGH>;
                        clocks = <&sysclk>;
                        clock-names = "ipg";
                        fsl,lpuart32;
                        status = "okay";
```

Source Files

The following source file are related to this feature in U-Boot.

Source File	Description
drivers/serial/serial_lpuart.c	The LPUART driver file

The following source file are related to this feature in Linux kernel.

Source File	Description
drivers/tty/serial/fsl_lpuart.c	The LPUART driver file

Verification in U-Boot

1. Boot up U-Boot from bank0, and update rcw and U-Boot for LPUART support to bank4, first copy the rcw and U-Boot binary to the TFTP directory.
2. Please refer to the platform deploy document to update the rcw and U-Boot.

3. After all is updated, run U-Boot command to switch to alt bank, then will bring up the new U-Boot to the LPUART console.

```
CPU:   Freescale LayerScape LS1020E, Version: 1.0, (0x87081010)
Clock Configuration:
       CPU0(ARMV7):1000 MHz,
       Bus:300  MHz, DDR:800  MHz (1600 MT/s data rate),
Reset Configuration Word (RCW):
       00000000: 0608000a 00000000 00000000 00000000
       00000010: 60000000 00407900 e0025a00 21046000
       00000020: 00000000 00000000 00000000 08038000
       00000030: 00000000 001b7200 00000000 00000000
I2C:   ready
Board: LS1021ATWR
CPLD:  V2.0
PCBA:  V1.0
VBank: 0
DRAM:  1 GiB
Using SERDES1 Protocol: 48 (0x30)
Flash: 0 Bytes
MMC:   FSL_SDHC: 0
EEPROM: NXID v16777216
PCIe1: Root Complex no link, regs @ 0x3400000
PCIe2: disabled
In:    serial
Out:   serial
Err:   serial
SATA link 0 timeout.
AHCI 0001.0300 1 slots 1 ports ? Gbps 0x1 impl SATA mode
flags: 64bit ncq pm clo only pmp fbss pio slum part ccc
Found 0 device(s).
SCSI:  Net:   eTSEC1 is in sgmii mode.
eTSEC2 is in sgmii mode.
eTSEC1, eTSEC2 [PRIME], eTSEC3
=>
```

Verification in Linux

1. After uboot startup, set the command line parameter to pass to the linux kernel including console=ttyLP0,115200 in boootargs. For deploy the ramdisk as rootfs, the bootargs can be set as: "set bootargs root=/dev/ram0 rw console=ttyLP0,115200"

```
=> set bootargs root=/dev/ram0 rw console=ttyLP0,115200

=> dhcp 81000000 <tftpboot dir>/zImage.ls1021a;tftp 88000000 <tftpboot dir>/
initrd.ls1.uboot;tftp 8f000000 <tftpboot dir>/ls1021atwr.dtb;bootz 81000000 88000000 8f000000

[...]

Starting kernel ...

Uncompressing Linux... done, booting the kernel.
Booting Linux on physical CPU 0xf00
Linux version 3.12.0+ (xxx@rock) (gcc version 4.8.3 20131202 (prerelease) (crosstool-NG
linaro-1.13.1-4.8-2013.12 - LinaroGCC 2013.11) ) #664 SMP Tue Jun 24 15:30:45 CST 2014
CPU: ARMv7 Processor [410fc075] revision 5 (ARMv7), cr=30c73c7d
CPU: PIPT / VIPT nonaliasing data cache, VIPT aliasing instruction cache
Machine: Freescale Layerscape LS1021A, model: LS1021A TWR Board
```

```
Memory policy: ECC disabled, Data cache writealloc
PERCPU: Embedded 7 pages/cpu @8901c000 s7936 r8192 d12544 u32768
Built 1 zonelists in Zone order, mobility grouping on.  Total pages: 520720
Kernel command line: root=/dev/ram rw console=ttyLP0,115200
PID hash table entries: 4096 (order: 2, 16384 bytes)

[...]

ls1021atwr login: root
root@ls1021atwr:~#
```

2. After the kernel boot up to the console, you can type any shell command in the LPUART TERMINAL.

7.2.8 PCI Express Interface Controller

7.2.8.1 PCIe Linux Driver

Module Loading

The MPC85xx/Layerscape PCIE host bridge support code is compiled into the kernel. It is not available as a module.

Kernel Configure Tree View Options

Kernel Configure Tree View Options	Description

`Bus support --->`
`[*] PCI support`
`[*] Message Signaled Interrupts (MSI and MSI-X)`
	Enable PCI host bridge and message support

`Bus support --->`
`PCI host controller drivers --->`
`[*] Freescale Layerscape PCIe controller`
	Enable NXP Layerscape PCIe controller

`Device Drivers --->`
`[*]Network device support --->`
`[*]Ethernet device support --->`
`[*] Intel devices --->`
`<*> Intel (R) PRO/1000 PCI-Express Gigabit Ethernet support`
	Intel PRO/1000 PCI-Express support

`Device Drivers --->`
`<*> Serial ATA and Parallel ATA drivers (libata) --->`
`<*> Silicon Image 3124/3132 SATA support`
	Enable support for Silicon Image 3124/3132 Serial ATA.

Compile-time Configuration Options

Option	Values	Default Value	Description
CONFIG_PCI	y/n	y	Enable PCI host bridge
CONFIG_PCI_MSI	y/n	y	Message support
CONFIG_PCI_LAYERSCAPE	y/n	y	Enable PCI for Layerscape
CONFIG_E1000E	y/m/n	y	Enable Intel Pro/1000 driver
CONFIG_SATA_SIL	y/m/n	y	Silicon Image SATA support

Source Files

The driver source is maintained in the Linux kernel source tree.

Source File	Description
arch/powerpc/sysdev/fsl_pci.c	The MPC85XX platform PCIE host bridge support source
drivers/pci/host/pci-layerscape.c	The Layerscape platform PCIE host bridge support source
drivers/net/ethernet/intel/e1000e/	Intel Pro/1000 driver source code
drivers/ata/sata_sil.c	Silicon Image source code

SATA Card Test Procedure

```
the user can use command
fdisk, mke2fs mount to operate the ide disk.
After kernel boots up, please follow the log to operate:


[root@pX0XX /root]# fdisk -l

Disk /dev/sda: 85.8 GB, 85899345920 bytes
255 heads, 63 sectors/track, 10443 cylinders
Units = cylinders of 16065 * 512 = 8225280 bytes

Disk /dev/sda doesn't contain a valid partition table


[root@pX0XX /root]# fdisk /dev/sda
Device contains neither a valid DOS partition table, nor Sun, SGI or OSF disklabel
Building a new DOS disklabel. Changes will remain in memory only,
until you decide to write them. After that the previous content
won't be recoverable.


The number of cylinders for this disk is set to 10443.
There is nothing wrong with that, but this is larger than 1024,
and could in certain setups cause problems with:
1) software that runs at boot time (e.g., old versions of LILO)
2) booting and partitioning software from other OSs
   (e.g., DOS FDISK, OS/2 FDISK)

Command (m for help): n
```

```
Command action
   e   extended
   p   primary partition (1-4)
p
Partition number (1-4): 1
First cylinder (1-10443, default 1): Using default value 1
Last cylinder or +size or +sizeM or +sizeK (1-10443, default 10443): 100

Command (m for help): w
The partition table has been altered!

Calling ioctl() to re-read partition table
sd 0:0:0:0: [sda] 167772160 512-byte hardware sectors (85899 MB)
sd 0:0:0:0: [sda] Write Protect is off
sd 0:0:0:0: [sda] Asking for cache data failed
sd 0:0:0:0: [sda] Assuming drive cache: write through
 sda: sda1


[root@pX0XX /root]# mke2fs /dev/sda1
mke2fs 1.34 (25-Jul-2003)
Filesystem label=
OS type: Linux
Block size=4096 (log=2)
Fragment size=4096 (log=2)
100576 inodes, 200804 blocks
10040 blocks (5.00%) reserved for the super user
First data block=0
7 block groups
32768 blocks per group, 32768 fragments per group
14368 inodes per group
Superblock backups stored on blocks:
        32768, 98304, 163840

Writing inode tables: done
Writing superblocks and filesystem accounting information: done

This filesystem will be automatically checked every 31 mounts or
180 days, whichever comes first.  Use tune2fs -c or -i to override.


[root@pX0XX /root]# mkdir sda1_test
[root@pX0XX /root]# mount /dev/sda1 sda1_test/
[root@pX0XX /root]# cp /bin/tar sda1_test/
[root@pX0XX /root]#
```

Ethernet Card Test Procedure

- plug Intel Pro/1000e network card into standard PCI-E slot on a board. After linux bootup, ifconfig ethx ip address and netmask, then do ping testing.

  Tips: x ethernet interface number, an example is as the following for Intel e1000 network card is eth0.

  For example:

  After kernel boot up, bring up with the pci Ethernet card

  ifconfig ethx 192.168.20.100

  ip address should not be conficted with other Ethernet port.

  In Linux window, run ping 192.168.20.101

Known Bugs, Limitations, or Technical Issues

- LSI-SAS card cannot be used on the second PCIe controller when system enables more than one PCIe controller. Use code modification below to workaround this issue:

```
--- a/arch/powerpc/sysdev/fsl_pci.c
+++ b/arch/powerpc/sysdev/fsl_pci.c
@@ -511,7 +511,7 @@ int __init fsl_add_bridge(struct platform_device *pdev, int is_primary)
         printk(KERN_WARNING "Can't get bus-range for %s, assume"
             " bus 0\n", dev->full_name);

-    pci_add_flags(PCI_REASSIGN_ALL_BUS);
+    pci_add_flags(PCI_ENABLE_PROC_DOMAINS);
     hose = pcibios_alloc_controller(dev);
     if (!hose)
         return -ENOMEM;
@@ -846,7 +846,7 @@ int __init mpc83xx_add_bridge(struct device_node *dev)
                " bus 0\n", dev->full_name);
     }

-    pci_add_flags(PCI_REASSIGN_ALL_BUS);
+    pci_add_flags(PCI_ENABLE_PROC_DOMAINS);
     hose = pcibios_alloc_controller(dev);
     if (!hose)
         return -ENOMEM;
```

7.2.8.2 PCIe Advanced Error Reporting User Manual

Description

How to test the PCI Express Advanced Error Reporting (AER) function.

Testing the PCIe AER error recovery code in actual environment is quite difficult because it is hard to trigger real hardware errors. So we use a software tool based error injection to fake various kinds of PCIe errors.

Kernel Configure Tree View Options

Kernel Configure Tree View Options	Description
Bus options ---> [*] PCI Express support [*] Root Port Advanced Error Reporting support <*> PCIe AER error injector support	enable PCI-Express AER and AER-INJECTOR in kernel

Kernel compile-time Configuration Options

Option	Values	Default Value	Description
CONFIG_PCIEAER	y/n	y	Enable AER
CONFIG_PCIEAER_INJECT	y/n	n	Enables AER INJECT

Source Files

The driver source is maintained in the Linux kernel source tree.

Source File	Description
drivers/pci/pcie/aer/*.c	AER driver support

- **Prepare aer-inject test tool**

```
1, Download aer-inject test utility.

2, Write a test config file
e.g. $ vi aer-cfg
     AER
     DOMAIN 0001
     BUS 1
     DEV 0
     FN 0
     COR_STATUS BAD_TLP
     HEADER_LOG 0 1 2 3

NOTE:
error type can be ["COR_STATUS", "UNCOR_STATUS"]

Corrected error can be:
["BAD_TLP", "RCVR", "BAD_DLLP", "REP_ROLL", "REP_TIMER"]

Uncorrected non-fatal error can be:
["POISON_TLP", "COMP_TIME", "COMP_ABORT", "UNX_COMP", "ECRC", "UNSUP"]

Uncorrected fatal error can be:
 ["TRAIN", "DLP", "FCP", "RX_OVER", "MALF_TLP"]
```

- **Test Steps**

```
1, insert a pcie device in PCI slot of board, ensure the pcie device has AER capability, e.g. e1000e
PCIe NIC network card.

2, In u-boot prompt, add "pcie_ports=native" in bootargs command-line.
=> setenv othbootargs pcie_ports=native

3, boot the kernel and filesystem.

4, check AER device and config
# zcat /proc/config.gz|grep -i CONFIG_PCIEAER_INJECT
CONFIG_PCIEAER_INJECT=y

# cat /proc/cmdline
root=/dev/ram rw console=ttyS0,115200 pcie_ports=native
check "pcie_ports=native" has been set.

# ls /dev/aer_inject
Check if the aer injector device is created.

# lspci
00:00.0 Class 0604: 1957:0410
01:00.0 Class 0200: 8086:10d3
```

```
e.g. here device "01:00.0" is the PCIe NIC e1000 network card in the test scenario.

5, Download aer-inject and aer-cfg from host to test-board
$ scp aer-inject aer-cfg root@test-board-ip:~

6, ensure the pcie device domain-number/bus-number/device-number/function-number in aer-cfg is
accordant to those in the output of lspci

7, Run aer-inject, corresponding error information will be reported as below and AER will recover
PCIE device according to the type of errors.
# ./aer-inject aer-cfg
example of error report as below:
pcieport 0000:00:00.0: AER: Corrected error received: id=0100
e1000e 0000:01:00.0: PCIe Bus Error: severity=Corrected, type=Data Link Layer, id=0100(Receiver ID)
e1000e 0000:01:00.0:   device [8086:10d3] error status/mask=00000040/00002000
e1000e 0000:01:00.0:    [ 6] Bad TLP
root@lsxxxx:~#

8, The pcie device(e1000e PCIE NIC) should still work after AER error recovery.
# ping 192.168.1.1 -c 2 -s 64
PING 192.168.1.1 (192.168.1.1): 64 data bytes
72 bytes from 192.168.1.1: icmp_seq=0 ttl=64 time=0.272 ms
72 bytes from 192.168.1.1: icmp_seq=1 ttl=64 time=0.210 ms
--- 192.168.1.1 ping statistics ---
2 packets transmitted, 2 packets received, 0% packet loss
round-trip min/avg/max/stddev = 0.210/0.241/0.272/0.031 ms
```

Note:

On some legacy platforms with legacy PCI conroller(e.g. some non-DPAA platforms), hardware doesn't support Fatal error type for AER, just support Non-Fatal error.

Generally, DPAA platforms with new PCIE controller can support both Fatal error and Non-Fatal error.

LS1088A and LS1012A fail to recover from fatal errors.

7.2.8.3 PCI-e Remove and Rescan User Manual

Description
Describes how to remove and rescan a PCI-e device under runtime Linux system.

U-boot Configuration
Use the default configurations.

Kernel Configure Options
Use the default configurations, make sure the configure option is set while doing "make menuconfig" for kernel.

Kernel Configure Tree View Options	Description
Device Drivers ---> [*] Network device support---> [*] Ethernet (1000 Mbit) ---> [*] Intel(R) PRO/1000 PCI-Express Gigabit Ethernet support	This option enables kernel support for Intel PCI-e e1000e network card

Below are the configure identifiers which are used in kernel source code and default configuration files.

Option	Values	Default Value	Description
CONFIG_E1000E	y/n	y	Intel PCI-e e1000e network card driver

Device Tree Binding

Use the default dtb file.

Verification in Linux

Make sure the PCI-e controller which you add the PCI-e e1000e network card to works as RC mode. Use the kernel, dtb and ramdisk rootfs to boot the board.

```
1. Suppose the PCI-e device under /sys/bus/pci/devices/0001\:03\:00.0 is the Intel PCI-e e1000e
network card, recognized as eth0. The
/sys/bus/pci/devices/0001\:02\:00.0 is the bus of network card. Configure an ip and ping another host
which is in the same subnet, make sure the network card works well.

    # ls /sys/bus/pci/devices/0001\:03\:00.0/net
    eth0
    # ifconfig eth0 10.193.20.100
    # ping -I eth0 10.193.20.31

2. Remove the PCI-e network card from system.
    # echo 1 > /sys/bus/pci/devices/0001\:03\:00.0/remove
    e1000e 0001:03:00.0 eth0: removed PHC

3. Check whether the PCI-e network card still exist in system. All should fail.
    # ifconfig eth0
    # ls /sys/bus/pci/devices/0001\:03\:00.0

4. Rescan it from the bus.
    # echo 1 > /sys/bus/pci/devices/0001\:02\:00.0/rescan

5. Check whether the device is rescanned and works well.
    # ls /sys/bus/pci/devices/0001\:03\:00.0
    # ifconfig eth0 10.193.20.100
    # ping -I eth0 10.193.20.31

6. All the commands of step 5 should success.
```

Known Bugs, Limitations, or Technical Issues

None

7.2.9 Quad Serial Peripheral Interface (QSPI)

U-Boot Configuration

Ensure that your board supports booting via QSPI.

For information about booting modes supported on your board and how to boot the board from the specific boot option, see Layerscape Quick Start.

Kernel Configure Tree View Options

```
Device Drivers --->
     [*] SPI support  --->
       <*> Freescale QSPI controller
```

Compile-time Configuration Options

Config	Values	Default Value	Description
CONFIG_SPI_FSL_QUADSPI	y/n	y	Enable QSPI module

Verification in U-Boot

```
=> sf probe 0:0
SF: Detected s25fl512s with page size 256 Bytes, erase size 256 KiB, total 64 MiB
=> sf erase 0x1000000 0x100000
SF: 1048576 bytes @ 0x1000000 Erased: OK
=> sf write 0x82000000 0x1000000 0x100000
device 0 offset 0x1000000, size 0x100000
SF: 1048576 bytes @ 0x1000000 Written: OK
=> sf read 0x81000000 0x1000000 0x100000
device 0 offset 0x1000000, size 0x100000
SF: 1048576 bytes @ 0x1000000 Read: OK
=> cmp.b 0x81000000 0x82000000 0x100000
Total of 1048576 byte(s) were the same
=>
```

Verification in Linux:

```
The booting log

......
spi-nor spi0.0: Failed to parse optional parameter table: ff81
spi-nor spi0.0: s25fs512s (65536 Kbytes)
spi-nor spi0.1: Failed to parse optional parameter table: ff81
spi-nor spi0.1: s25fs512s (65536 Kbytes)
......

Erase the QSPI flash

~# mtd_debug erase /dev/mtd1 0x1000000 0x100000
Erased 1048576 bytes from address 0x01000000 in flash

Write the QSPI flash

~# dd if=/dev/urandom of=data.hex count=1 bs=1M
1+0 records in
1+0 records out
1048576 bytes (1.0 MB) copied, 0.0132132 s, 79.4 MB/s
~# mtd_debug write /dev/mtd1 0x1000000 0x100000 data.hex
Copied 1048576 bytes from data.hex to address 0x01000000 in flash
```

```
Read the QSPI flash

~# mtd_debug read /dev/mtd1 0x1000000 0x100000 dump
Copied 1048576 bytes from address 0x01000000 in flash to dump

Check Read and Write

Use compare tools
~ # diff data.hex dump
~ #
If diff command has no print log, the QSPI verification is passed.
```

7.2.10 Flexible Serial Peripheral Interface (FlexSPI)

U-Boot Configuration

Ensure that your board supports booting via FlexSPI.

For information about booting modes supported on your board and how to boot the board from the specific boot option, see Layerscape Quick Start.

Kernel Configure Tree View Options

```
Device Drivers --->
     [*] SPI support  --->
       <*>   NXP Flex SPI controller
```

Compile-time Configuration Options

Config	Values	Default Value	Description
CONFIG_SPI_NXP_FLEXSPI	y/n	y	Enable FlexSPI module

Verification in U-Boot

```
=> sf probe 0:0
SF: Detected mt35xu512aba with page size 256 Bytes, erase size 128 KiB, total 64 MiB
=> sf erase 0x1000000 0x100000
SF: 1048576 bytes @ 0x1000000 Erased: OK
=> sf write 0x82000000 0x1000000 0x100000
device 0 offset 0x1000000, size 0x100000
SF: 1048576 bytes @ 0x1000000 Written: OK
=> sf read 0x81000000 0x1000000 0x100000
device 0 offset 0x1000000, size 0x100000
SF: 1048576 bytes @ 0x1000000 Read: OK
=> cmp.b 0x81000000 0x82000000 0x100000
Total of 1048576 byte(s) were the same
=>
```

Verification in Linux:

```
The booting log

......
spi-nor spi0.0: found mt35xu512aba, expected m25p80
spi-nor spi0.0: mt35xu512aba (65536 Kbytes)
spi-nor spi0.1: found mt35xu512aba, expected m25p80
spi-nor spi0.1: mt35xu512aba (65536 Kbytes)
......

Erase the FlexSPI flash

~# mtd_debug erase /dev/mtd1 0x1000000 0x100000
Erased 1048576 bytes from address 0x01000000 in flash

Write the FlexSPI flash

~# dd if=/dev/urandom of=data.hex count=1 bs=1M
1+0 records in
1+0 records out
1048576 bytes (1.0 MB) copied, 0.00926398 s, 113 MB/s
~# mtd_debug write /dev/mtd1 0x1000000 0x100000 data.hex
Copied 1048576 bytes from data.hex to address 0x01000000 in flash

Read the FlexSPI flash

~# mtd_debug read /dev/mtd1 0x1000000 0x100000 dump
Copied 1048576 bytes from address 0x01000000 in flash to dump

Check Read and Write

Use compare tools
~# diff data.hex dump
~#

If diff command has no print log, the FlexSPI verification is passed.
```

7.2.11 Queue Direct Memory Access Controller (qDMA)

The qDMA controller transfers blocks of data between one source and one destination. The blocks of data transferred can be represented in memory as contiguous or noncontiguous using scatter/gather table(s). Channel virtualization is supported through enqueuing of DMA jobs to, or dequeuing DMA jobs from, different work queues.

QDMA can support Layerscape platform with DPAA1 or DPAA2.

QDMA for platform with DPAA1

Kernel Configure Options

Below are the configure options need to be set/unset while doing "make menuconfig" for kernel.

Kernel Configure Tree View Options	Description

Table continues on the next page...

Table continued from the previous page...

`Device Drivers --->`
`[*] DMA Engine support ---> --->`
`<*> Freescale qDMA engine support`
	Support the Freescale qDMA engine with command queue and legacy mode.
	Channel virtualization is supported through enqueuing of DMA jobs to,
	or dequeuing DMA jobs from, different work queues.
	This module can be found on Freescale LS SoCs.

Identifier

Below are the configure identifiers which are used in kernel source code and default configuration files.

Option	Values	Default Value	Description
CONFIG_FSL_QDMA	y/m/n	n	qDMA driver

Device Tree Binding

Device Tree Node

Below is an example device tree node required by this feature. Note that it may has differences among platforms.

```
qdma: qdma@8380000 {
        compatible = "fsl,ls1046a-qdma", "fsl,ls1021a-qdma";
        reg = <0x0 0x8380000 0x0 0x1000>, /* Controller regs */
              <0x0 0x8390000 0x0 0x10000>, /* Status regs */
              <0x0 0x83a0000 0x0 0x40000>; /* Block regs */
        interrupts = <0 153 0x4>,
                     <0 39 0x4>;
        interrupt-names = "qdma-error", "qdma-queue";
        channels = <8>;
        queues = <2>;
        status-sizes = <64>;
        queue-sizes = <64 64>;
        big-endian;
};
```

Source File

The following source files are related the feature in Linux kernel.

Source File	Description
drivers/dma/fsl-qdma.c	The qDMA driver file

Verification in Linux

```
root@ls1043ardb:~# echo 1024 > /sys/module/dmatest/parameters/test_buf_size;
root@ls1043ardb:~# echo 4 > /sys/module/dmatest/parameters/threads_per_chan;
root@ls1043ardb:~# echo 2 > /sys/module/dmatest/parameters/max_channels;
root@ls1043ardb:~# echo 100 > /sys/module/dmatest/parameters/iterations;
root@ls1043ardb:~# echo 1 > /sys/module/dmatest/parameters/run

[   32.498138] dmatest: Started 4 threads using dma0chan0
[   32.503430] dmatest: Started 4 threads using dma0chan1
```

```
[   32.508939] dmatest: Started 4 threads using dma0chan2
[   32.520073] dmatest: dma0chan0-copy0: summary 100 tests, 0 failures 4904 iops 2452 KB/s (0)
[   32.520076] dmatest: dma0chan0-copy2: summary 100 tests, 0 failures 4923 iops 2461 KB/s (0)
[   32.520079] dmatest: dma0chan0-copy3: summary 100 tests, 0 failures 4928 iops 2661 KB/s (0)
[   32.520176] dmatest: dma0chan0-copy1: summary 100 tests, 0 failures 4892 iops 2446 KB/s (0)
[   32.526438] dmatest: dma0chan1-copy0: summary 100 tests, 0 failures 4666 iops 2240 KB/s (0)
[   32.526441] dmatest: dma0chan1-copy2: summary 100 tests, 0 failures 4675 iops 2291 KB/s (0)
[   32.526469] dmatest: dma0chan1-copy3: summary 100 tests, 0 failures 4674 iops 2197 KB/s (0)
[   32.529610] dmatest: dma0chan2-copy1: summary 100 tests, 0 failures 5168 iops 2791 KB/s (0)
[   32.529613] dmatest: dma0chan2-copy0: summary 100 tests, 0 failures 5164 iops 2478 KB/s (0)
[   32.529754] dmatest: dma0chan2-copy3: summary 100 tests, 0 failures 5215 iops 2555 KB/s (0)
[   32.529756] dmatest: dma0chan2-copy2: summary 100 tests, 0 failures 5211 iops 2709 KB/s (0)
[   32.537881] dmatest: dma0chan1-copy1: summary 100 tests, 0 failures 3044 iops 1461 KB/s (0) (0)
dmatest: dma0chan0-copy3: summary 1000 tests, 0 failures 4078 iops 33474 KB/s (0)
dmatest: dma0chan0-copy0: summary 1000 tests, 0 failures 3024 iops 24486 KB/s (0)
dmatest: dma0chan0-copy2: summary 1000 tests, 0 failures 2881 iops 23588 KB/s (0)
```

QDMA for platform with DPAA2

Kernel Configure Options

Below are the configure options need to be set/unset while doing "make menuconfig" for kernel.

Kernel Configure Tree View Options	Description
Device Drivers ---> [*] DMA Engine support ---> ---> <*> NXP DPAA2 QDMA	NXP Data Path Acceleration Architecture 2 QDMA driver, using the NXP MC bus driver.

Identifier

Below are the configure identifiers which are used in kernel source code and default configuration files.

Option	Values	Default Value	Description
CONFIG_FSL_DPAA2_QDMA	y/m/n	n	qDMA driver

Source Files

The following source files are related the feature in Linux kernel.

Source File	Description
drivers/dma/dpaa2-qdma/*	The qDMA driver file

Verification in Linux

```
Create DPDMAI object using restool:

restool dpdmai create --priorities=2,5
restool dprc assign dprc.1 --object=dpdmai.0 --plugged=1

Configure parameters for dmatest and run it:

echo 8 > /sys/module/dmatest/parameters/test_flag
```

```
echo 100 > /sys/module/dmatest/parameters/sg_size
echo 10000 > /sys/module/dmatest/parameters/iterations
echo 1 > /sys/module/dmatest/parameters/threads_per_chan
echo 8 > /sys/module/dmatest/parameters/max_channels
echo 64 > /sys/module/dmatest/parameters/test_buf_size
echo 1 > /sys/module/dmatest/parameters/run

Example log:

root@ls2085ardb:~# echo 8 > /sys/module/dmatest/parameters/test_flag
root@ls2085ardb:~# echo 10 > /sys/module/dmatest/parameters/iterations
root@ls2085ardb:~# echo 2 > /sys/module/dmatest/parameters/threads_per_chan
root@ls2085ardb:~# echo 32384 > /sys/module/dmatest/parameters/test_buf_size
root@ls2085ardb:~# echo 4 > /sys/module/dmatest/parameters/max_channels
root@ls2085ardb:~# echo 1 > /sys/module/dmatest/parameters/run
[   68.460353] dmatest: Started 2 threads using dma0chan0
[   68.465549] dmatest: Started 2 threads using dma0chan1
[   68.465755] dmatest: dma0chan0-sg0: summary 10 tests, 0 failures 1847 iops 422686 KB/s (0)
[   68.465963] dmatest: dma0chan0-sg1: summary 10 tests, 0 failures 1786 iops 367095 KB/s (0)
[   68.470694] dmatest: dma0chan1-sg0: summary 10 tests, 0 failures 1938 iops 608838 KB/s (0)
[   68.470987] dmatest: dma0chan1-sg1: summary 10 tests, 0 failures 1843 iops 517419 KB/s (0)
[   68.503858] dmatest: Started 2 threads using dma0chan2
[   68.509042] dmatest: Started 2 threads using dma0chan3
[   68.509255] dmatest: dma0chan2-sg0: summary 10 tests, 0 failures 1849 iops 549944 KB/s (0)
[   68.509454] dmatest: dma0chan2-sg1: summary 10 tests, 0 failures 1789 iops 473514 KB/s (0)
[   68.514518] dmatest: dma0chan3-sg1: summary 10 tests, 0 failures 1830 iops 414714 KB/s (0)
[   68.515016] dmatest: dma0chan3-sg0: summary 10 tests, 0 failures 1670 iops 512859 KB/s (0)
```

7.2.12 Real Time Clock (RTC)

Linux SDK for QorIQ Processors

Description

Provides the RTC function.

Kernel Configure Tree View Options

Kernel Configure Tree View Options	Description
Device Drivers-> Real Time Clock-->[*] Set system time from RTC on startup and resume (new) (rtc0) RTC used to set the system time (new) <[*] /sys/class/rtc/rtcN (sysfs) <[*] /proc/driver/rtc (procfs for rtc0) <[*] /dev/rtcN (character devices)	Enable RTC driver

Compile-time Configuration Options

Option	Values	Default Value	Description
CONFIG_RTC_LIB	y/m/n	y	Enable RTC lib
CONFIG_RTC_CLASS	y/m/n	y	Enable generic RTC class support
CONFIG_RTC_HCTOSYS	y/n	y	Set the system time from RTC when startup and resume
CONFIG_RTC_HCTOSYS_DEVICE		"rtc0"	RTC used to set the system time
CONFIG_RTC_INTF_SYSFS	y/m/n	y	Enable RTC to use sysfs
CONFIG_RTC_INTF_PROC	y/m/n	y	Use RTC through the proc interface
CONFIG_RTC_INTF_DEV	y/m/n	y	Enable RTC to use /dev interface

Source Files

The driver source is maintained in the Linux kernel source tree.

Source File	Description
drivers/rtc/	Linux RTC driver

Device Tree Binding

Preferred node name: rtc

Property	Type	Status	Description
compatible	string	Required	Should be "dallas,ds3232"

Default node:

```
i2c@3000 {
            #address-cells = <1>;
            #size-cells = <0>;
            compatible = "fsl-i2c";
            reg = <0x3000 0x100>;
            interrupts = <43 2>;
            interrupt-parent = <&mpic>;
            dfsrr;
            rtc@68 {
                    compatible = "dallas,ds3232";
                    reg = <0x68>;
            };
          };
```

Verification in Linux

Here is the rtc booting log

```
      ...
      rtc-ds3232 1-0068: rtc core: registered ds3232 as rtc0
      MC object device driver dpaa2_rtc registered
      rtc-ds3232 0-0068: setting system clock to 2000-01-01 00:00:51 UTC (946684851)
      ...

NOTE: Please refer to the related DTS file to enable the RTC driver before building.
      For example, LS2080AQDS board, should enable the below option:
      <*> Dallas/Maxim DS3232
```

Change the RTC time in Linux Kernel

```
        ~ # ls /dev/rtc -l
        lrwxrwxrwx    1 root     root            4 Jan 11 17:55 /dev/rtc -> rtc0
        ~ # date
        Sat Jan  1 00:01:38 UTC 2000
        ~ # hwclock
        Sat Jan  1 00:01:41 2000  0.000000 seconds
        ~ # date 011115502011
        Tue Jan 11 15:50:00 UTC 2011
        ~ # hwclock -w
        ~ # hwclock
        Tue Jan 11 15:50:36 2011  0.000000 seconds
        ~ # date 011115502010
        Mon Jan 11 15:50:00 UTC 2010
        ~ # hwclock -s
        ~ # date
        Tue Jan 11 15:50:49 UTC 2011
        ~ #

        NOTE: Before using the rtc driver, make sure the /dev/rtc node in your file system is
correct. Otherwise, you need to make correct node for /dev/rtc
```

7.2.13 Synchronous Audio Interface (SAI)

Description

This document describes how to configure and test SAI audio driver for TWR-LS1021A and LS1028ARDB. The integrated I2S module is NXP's Synchronous Audio Interface (SAI). The codec is SGTL5000 stereo audio codec.

RCW configuration

Refer to the below table for the RCW for Audio on the TWR-LS1021A.

Board	RCW
TWR-LS1021A	Bit 364, EC1_EXT_SAI2_TX = 1; Bit 365, EC1_EXT_SAI2_RX =1; Bit 366-367, EC1_BASE = 00
LS1028ARDB	rcw_1300_audio.rcw, EC1_SAI4_5_PMUX = 2

Kernel Configure Options Tree View

Kernel Configure Tree View Options	Description

<pre>Device Drivers --->
<*> I2C support --->
[*] Enable compatibility bits for old user-space
[*] I2C device interface
[*] I2C bus multiplexing support
Multiplexer I2C Chip support --->
<*> Philips PCA954x I2C Mux/switches
[*] Autoselect pertinent helper modules
I2C Hardware Bus support --->
<*> IMX I2C interface
 	
<*> Voltage and Current Regulator Support --->
[*] Regulator debug support
[*] Provide a dummy regulator if regulator lookups fail
[*] Fixed voltage regulator support
 	
<*> Sound card support
<*> Advanced Linux Sound Architecture ->
[*] OSS PCM (digital audio) API
[*] OSS PCM (digital audio) API - Include plugin system
[*] Support old ALSA API
[*] Verbose procfs contents
ALSA for SoC audio support --->
SoC Audio for Freescale CPUs --->
<*> Synchronous Audio Interface (SAI) module support
CODEC drivers --->
<*> Freescale SGTL5000 CODEC
<*> ASoC Simple sound card support
<*> DMA Engine support --->
<*> Freescale eDMA engine support support</pre>
	Enable ALSA SOC driver, I2C driver and EDMA driver.

Identifier

Below are the configure identifiers which are used in kernel source code and default configuration files.

Option	Values	Default value	Description
CONFIG_I2C_IMX	y/m/n	y	I2C driver needed for configuring SGTL5000
CONFIG_SOUND	y/m/n	y	Enable sound card support
CONFIG_SND	y/m/n	y	Enable advanced Linux sound architecture supports
CONFIG_SND_PCM_OSS	y/m/n	y	Enable OSS digital audio

Table continues on the next page...

Table continued from the previous page...

CONFIG_SND_PCM_OSS_PLUGINS	y/m/n	y	Support conversion of channels, formats and rates
CONFIG_SND_SUPPORT_OLD_API	y/m/n	y	Enable support old ALSA API
CONFIG_SND_SOC_FSL_SAI	y/m/n	y	Enable SAI module support
CONFIG_SND_SOC_GENERIC_DMAENGINE_PCM	y/m/n	y	Enable generic dma engine for PCM
CONFIG_SND_SIMPLE_CARD	y/m/n	y	Enable generic simple sound card support
CONFIG_SND_SOC_SGTL5000	y/m/n	y	Enable codec sgtl5000 support
CONFIG_FSL_EMDA	y/m/n	y	Enable EDMA engine support

Source files

The driver source is maintained in the Linux kernel source tree.

Source file	Description
sound/soc/fsl	ALSA SOC driver source

Verification in Linux

1. The following messages will be shown in the kernel boot process:

```
sgtl5000 5-000a: sgtl5000 revision 0x11
sgtl5000 5-000a: Using internal LDO instead of VDDD
......
asoc-simple-card sound:  sgtl5000 <-> 2b60000.sai mapping ok
......
ALSA device list:
  #0: 2b60000.sai-sgtl5000
```

2. If the device nodes don't already exist, create directory /dev/snd/, and create device nodes with the following commands in /dev/snd/ directory.

```
mknod controlC0 c 116 0
mknod pcmC0D0c c 116 24
mknod pcmC0D0p c 116 16
```

3. On TWR-LS1021A, the LineOut interface is J8 and the LineIn interface is J13
4. On LS1028ARDB, set the switches SW5[8] = ON. To configure BRDCFG3[2] = 1, use latest CPLD or run this command “i2c mw 0x66 0x53 0x4” in U-Boot prompt. The lineout interface is J34.
5. Run the following aplay commands to test playback. Run the following arecord command to test record.

```
aplay -f S16_LE -r 44100 -t wav -c 2 44k-16bit-stereo.wav
```

```
arecord -d 10 -f S16_LE -r 44100 -t wav -c 2 44k-16bit-stereo-10s.wav
aplay -f S16_LE -r 44100 -t wav -c 2 44k-16bit-stereo-10s.wav
```

6. Use alsamixer to adjust the volume for playing by the option “PCM” and recording gain by the option "Mic" . Use alsamixer to choose LINE IN or MIC.

7.2.14 Serial Advanced Technology Attachment (SATA)

Description

The driver supports NXP native SATA controller.

Module Loading

SATA driver supports either kernel built-in or module.

Kernel Configure Tree View Options	Description
Device Drivers---> <*> Serial ATA and Parallel ATA drivers ---> --- Serial ATA and Parallel ATA drivers <*> AHCI SATA support <*> Freescale QorIQ AHCI SATA support	Enables SATA controller support on Arm-based SoCs

Compile-time Configuration Options

Option	Values	Default Value	Description
CONFIG_SATA_AHCI=y	y/m/n	y	Enables SATA controller
CONFIG_SATA_AHCI_QORIQ=y	y/m/n	y	Enables SATA controller

Source Files

The driver source is maintained in the Linux kernel source tree.

Source File	Description
drivers/ata/ahci_qoriq.c	Platform AHCI SATA support

Test Procedure

```
Please follow the following steps to use USB in Simics
(1) Boot up the kernel
...
fsl-sata ffe18000.sata: Sata FSL Platform/CSB Driver init
scsi0 : sata_fsl
ata1: SATA max UDMA/133 irq 74
fsl-sata ffe19000.sata: Sata FSL Platform/CSB Driver init
scsi1 : sata_fsl
ata2: SATA max UDMA/133 irq 41
```

```
...
(2) The disk will be found by kernel.
...
ata1: Signature Update detected @ 504 msecs
ata2: No Device OR PHYRDY change,Hstatus = 0xa0000000
ata2: SATA link down (SStatus 0 SControl 300)
ata1: SATA link up 1.5 Gbps (SStatus 113 SControl 300)
ata1.00: ATA-8: WDC WD1600AAJS-22WAA0, 58.01D58, max UDMA/133
ata1.00: 312581808 sectors, multi 0: LBA48 NCQ (depth 16/32)
ata1.00: configured for UDMA/133
scsi 0:0:0:0: Direct-Access     ATA      WDC WD1600AAJS-2 58.0 PQ: 0 ANSI: 5
sd 0:0:0:0: [sda] 312581808 512-byte logical blocks: (160 GB/149 GiB)
sd 0:0:0:0: Attached scsi generic sg0 type 0
sd 0:0:0:0: [sda] Write Protect is off
sd 0:0:0:0: [sda] Write cache: enabled, read cache: enabled, doesn't support DPO
 or FUA
 sda: sda1 sda2 sda3 sda4 < sda5 sda6 >
sd 0:0:0:0: [sda] Attached SCSI disk

(3)play with the disk according to the following log.
[root@ls1046 root]# fdisk -l /dev/sda
Disk /dev/sda: 160.0 GB, 160041885696 bytes
255 heads, 63 sectors/track, 19457 cylinders
Units = cylinders of 16065 * 512 = 8225280 bytes

    Device Boot      Start         End      Blocks  Id System
/dev/sda1               1         237     1903671  83 Linux
/dev/sda2             238         480     1951897+ 82 Linux swap
/dev/sda3             481        9852    75280590  83 Linux
/dev/sda4            9853       19457    77152162+  f Win95 Ext'd (LBA)
/dev/sda5            9853       14655    38580066  83 Linux
/dev/sda6           14656       19457    38572033+ 83 Linux
[root@ls1046 root]#
[root@ls1046 root]# mke2fs /dev/sda1
mke2fs 1.41.4 (27-Jan-2009)
Filesystem label=
OS type: Linux
Block size=4096 (log=2)
Fragment size=4096 (log=2)
65280 inodes, 261048 blocks
13052 blocks (5.00%) reserved for the super user
First data block=0
Maximum filesystem blocks=268435456
8 block groups
32768 blocks per group, 32768 fragments per group
8160 inodes per group
Superblock backups stored on blocks:
        32768, 98304, 163840, 229376

Writing inode tables: done
Writing superblocks and filesystem accounting information: done

This filesystem will be automatically checked every 22 mounts or
180 days, whichever comes first.  Use tune2fs -c or -i to override.
[root@ls1046 root]#
[root@ls1046 root]# mkdir sata
[root@ls1046 root]# mount /dev/sda1 sata
[root@ls1046 root]# ls sata/
lost+found
[root@ls1046 root]# cp /bin/busybox sata/
```

```
[root@ls1046 root]# umount sata/
[root@ls1046 root]# mount /dev/sda1 sata/
[root@ls1046 root]# ls sata/
busybox     lost+found
[root@ls1046 root]# umount sata/
[root@ls1046 root]# mount /dev/sda3 /mnt
[root@ls1046 root]# df
Filesystem           1K-blocks      Used Available Use% Mounted on
rootfs               852019676 794801552  13937948  99% /
/dev/root            852019676 794801552  13937948  99% /
tmpfs                  1036480        52   1036428   1% /dev
shm                    1036480         0   1036480   0% /dev/shm
/dev/sda3             74098076   4033092  66300956   6% /mnt
```

Known Bugs, Limitations, or Technical Issues

- CDROM is not supported due to the silicon limitation

7.2.15 Security Engine (SEC)

SEC Device Drivers

Introduction and Terminology

The Linux kernel contains a Scatterlist Crypto API driver for the NXP SEC v4.x, v5.x security hardware blocks.

It integrates seamlessly with in-kernel crypto users, such as IPsec, in a way that any IPsec suite that configures IPsec tunnels with the kernel will automatically use the hardware to do the crypto.

SEC v5.x is backward compatible with SEC v4.x hardware, so one can assume that subsequent SEC v4.x references include SEC v5.x hardware, unless explicitly mentioned otherwise.

SEC v4.x hardware is known in Linux kernel as 'caam', after its internal block name: Cryptographic Accelerator and Assurance Module.

There are several HW interfaces ("backends") that can be used to communicate (i.e. submit requests) with the engine, their availability depends on the SoC:

- Register Interface (RI) - available on all SoCs (though access from kernel is restricted on DPAA2 SoCs)

  Its main purpose is debugging (for e.g. single-stepping through descriptor commands), though it is used also for RNG initialization.

- Job Ring Interface (JRI) - legacy interface, available on all SoCs; on most SoCs there are 4 rings

  Note: there are cases when fewer rings are accessible / visible in the kernel - for e.g. when firmware like Trusted Firmware-A (TF-A) reserves one of the rings.

- Queue Interface (QI) - available on SoCs implementing DPAA v1.x (Data Path Acceleration Architecture)

  Requests are submitted indirectly via Queue Manager (QMan) HW block that is part of DPAA1.

- Data Path SEC Interface (DPSECI) - available on SoCs implementing DPAA v2.x

  Similar to QI, requests are submitted via Queue Manager (QMan) HW block; however, the architecture is different - instead of using the platform bus, the Management Complex (MC) bus is used, MC firmware performing needed configuration to link DP* objects - see DPAA2 Linux Software chapter for more details.

NXP provides device drivers for all these interfaces. Current chapter is focused on JRI, though some general / common topics are also covered. For QI and DPSECI backends and compatible frontends, please refer to the dedicated chapters: for DPAA1, Security Engine for DPAA2.

On top of these backends, there are the "frontends" - drivers that sit between the Linux Crypto API and backend drivers. Their main tasks are to:

- register supported crypto algorithms
- process crypto requests coming from users (via the Linux Crypto API) and translate them into the proper format understood by the backend being used
- forward the CAAM engine responses from the backend being used to the users

Note: It is obvious that QI and DPSECI backends cannot co-exist (they can be compiled in the same "multi-platform" kernel image, however run-time detection will make sure only the proper one is active). However, JRI + QI and JRI + DPSECI are valid combinations, and both backends will be active if enabled; if a crypto algorithm is supported by both corresponding frontends (for e.g. both *caamalg* and *caamalg_qi* register cbc(aes)), a user requesting cbc(aes) will be bound to the implementation having the highest "crypto algorithm priority". If the user wants to use a specific implementation:

- it is possible to ask for it explicitly by using the specifc (unique) "driver name" instead of the generic "algorithm name" - please see official Linux kernel Crypto API documentation (section Crypto API Cipher References And Priority); currently default priorities are: 3000 for JRI frontend and 2000 for QI and DPSECI frontends
- crypto algorithm priority could be changed dynamically using the "Crypto use configuration API" (provided that CONFIG_CRYPTO_USER is enabled); one of the tools available that is capable to do this is "Linux crypto layer configuration tool" and an example of increasing the priority of QI frontend based implementation of echainiv(authenc(hmac(sha1),cbc(aes))) algorithm is:

```
$ ./crconf update driver "echainiv-authenc-hmac-sha1-cbc-aes-caam-qi" type 3 priority 5000
```

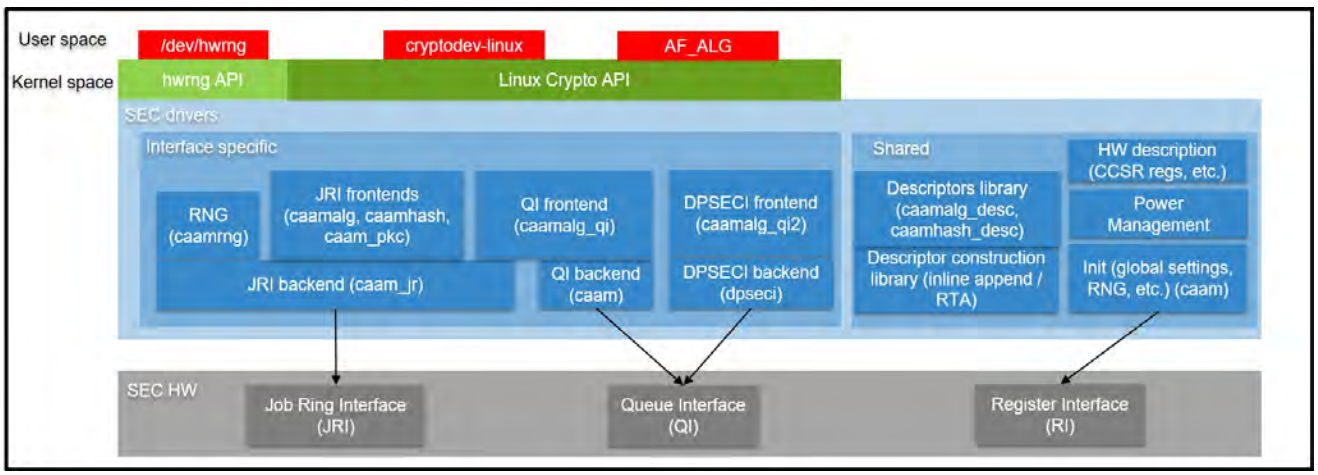

Figure 35. Linux kernel - SEC device drivers overview

Source Files

The drivers source code is maintained in the Linux kernel source tree, under *drivers/crypto/caam*. Below is a non-exhaustive list of files, mapping to Security Engine (SEC)(some files have been omitted since their existence is justified only by driver logic / design):

Source File(s)	Description	Module name
ctrl.[c,h]	Init (global settings, RNG, power management etc.)	caam
desc.h	HW description (CCSR registers etc.)	N/A

Table continues on the next page...

Table continued from the previous page...

Source File(s)	Description	Module name
desc_constr.h	Inline append - descriptor construction library	N/A
caamalg_desc.[c,h]	(Shared) Descriptors library (symmetric encryption, AEAD)	caamalg_desc
caamrng.c	RNG (runtime)	caamrng
jr.[c,h]	JRI backend	caam_jr
qi.[c,h]	QI backend	caam
dpseci.[c,h], dpseci_cmd.h	DPSECI backend	N/A (built-in)
caamalg.c	JRI frontend (symmetric encryption, AEAD)	caamalg
caamhash.c	JRI frontend (hashing)	caamhash
caampkc.c, pkc_desc.c	JRI frontend (public key cryptography)	caam_pkc
caamalg_qi.c	QI frontend (symmetric encryption, AEAD)	caamalg_qi
caamalg_qi2.[c,h]	DPSECI frontend (symmetric encryption, AEAD)	dpaa2_caam

Module loading

CAAM device drivers can be compiled either built-in or as modules (with the exception of DPSECI backend, which is always built-in). See section Source Files for the list of module names and section Kernel Configuration for how kernel configuration looks like and a mapping between menu entries and modules and / or functionalities enabled.

Kernel Configuration

CAAM device drivers are located in the "Cryptographic API" -> "Hardware crypto devices" sub-menu in the kernel configuration. Depending on the target platform and / or configuration file(s) used, the output will be different; below is an example taken from NXP Layerscape SDK for ARMv8 platforms with default options:

Kernel Configure Tree View Options	Description

`Cryptographic API  --->`
`     [*]   Hardware crypto devices  --->`
`     <*>   Freescale CAAM-Multicore platform driver backend (SEC)`
`     [ ]     Enable debug output in CAAM driver`
`     <*>     Freescale CAAM Job Ring driver backend (SEC)`
`     (9)       Job Ring size`
`     [ ]       Job Ring interrupt coalescing`
`     <*>       Register algorithm implementations with the Crypto API`
`     <*>       Queue Interface as Crypto API`
	Enable CAAM device drivers, options:
	• basic platform driver: *Freescale CAAM-Multicore platform driver backend (SEC)*; all non-DPAA2 sub-options depend on it
	• backends / interfaces:
	— *Freescale CAAM Job Ring driver backend (SEC)* - JRI; this also enables QI (QI depends on JRI)
	— *QorIQ DPAA2 CAAM (DPSECI) driver* - DPSECI
	• frontends / crypto algorithms:

Table continues on the next page...

Table continued from the previous page...

Kernel Configure Tree View Options	Description
backend <*> Register hash algorithm implementations with Crypto API <*> Register public key cryptography implementations with Crypto API <*> Register caam device for hwrng API <M> QorIQ DPAA2 CAAM (DPSECI) driver	— symmetric encryption, AEAD, "stitched" AEAD, TLS; *Register algorithm implementations with the Crypto API* - via JRI (*caamalg* driver) or *Queue Interface as Crypto API backend* - via QI (*caamalg_qi* drive) — *Register hash algorithm implementations with Crypto API* - hashing (only via JRI - *caamhash* driver) — *Register public key cryptography implementations with Crypto API* - asymmetric / public key (only via JRI - *caam_pkc* driver) — *Register caam device for hwrng API* - HW RNG (only via JRI - *caamrng* driver) — *QorIQ DPAA2 CAAM (DPSECI) driver* - DPSECI • options: debugging, JRI ring size, JRI interrupt coalescing
Networking support ---> Network option ---> <*> TCP/IP networking <*> IP: AH transformation <*> IP: ESP transformation <*> IP: IPsec transport mode <*> IP: IPsec tunnel mode	For IPsec support the TCP/IP networking option and corresponding sub-options should be enabled.

Device Tree binding

Property	Type	Status	Description
compatible	String	Required	fsl,sec-vX.Y (preferred) OR fsl,secX.Y

Sample Device Tree crypto node

```
    crypto@30000 {
            compatible = "fsl,sec-v4.0";
            fsl,sec-era = <2>;
            #address-cells = <1>;
            #size-cells = <1>;
            reg = <0x300000 0x10000>;
            ranges = <0 0x300000 0x10000>;
            interrupt-parent = <&mpic>;
            interrupts = <92 2>;
            clocks = <&clks IMX6QDL_CLK_CAAM_MEM>,
                     <&clks IMX6QDL_CLK_CAAM_ACLK>,
                     <&clks IMX6QDL_CLK_CAAM_IPG>,
                     <&clks IMX6QDL_CLK_EIM_SLOW>;
            clock-names = "mem", "aclk", "ipg", "emi_slow";
    };
```

NOTE

See linux/Documentation/devicetree/bindings/crypto/fsl-sec4.txt file in the Linux kernel tree for more info.

How to test the drivers

To test the drivers, under the "`Cryptographic API -> Cryptographic algorithm manager`" kernel configuration sub-menu, ensure that run-time self tests are not disabled, i.e. the "Disable run-time self tests" entry is not set (*CONFIG_CRYPTO_MANAGER_DISABLE_TESTS=n*). This will run standard test vectors against the drivers after they register supported algorithms with the kernel crypto API, usually at boot time. Then run test on the target system. Below is a snippet extracted from the boot log of ARMv8-based LS1046A platform, with JRI and QI enabled:

```
[...]
platform caam_qi: Linux CAAM Queue I/F driver initialised
caam 1700000.crypto: Instantiated RNG4 SH1
caam 1700000.crypto: device ID = 0x0a11030100000000 (Era 8)
caam 1700000.crypto: job rings = 4, qi = 1, dpaa2 = no
alg: No test for authenc(hmac(sha224),ecb(cipher_null)) (authenc-hmac-sha224-ecb-cipher_null-caam)
alg: No test for authenc(hmac(sha256),ecb(cipher_null)) (authenc-hmac-sha256-ecb-cipher_null-caam)
alg: No test for authenc(hmac(sha384),ecb(cipher_null)) (authenc-hmac-sha384-ecb-cipher_null-caam)
alg: No test for authenc(hmac(sha512),ecb(cipher_null)) (authenc-hmac-sha512-ecb-cipher_null-caam)
alg: No test for authenc(hmac(md5),cbc(aes)) (authenc-hmac-md5-cbc-aes-caam)
alg: No test for echainiv(authenc(hmac(md5),cbc(aes))) (echainiv-authenc-hmac-md5-cbc-aes-caam)
alg: No test for echainiv(authenc(hmac(sha1),cbc(aes))) (echainiv-authenc-hmac-sha1-cbc-aes-caam)
alg: No test for authenc(hmac(sha224),cbc(aes)) (authenc-hmac-sha224-cbc-aes-caam)
alg: No test for echainiv(authenc(hmac(sha224),cbc(aes))) (echainiv-authenc-hmac-sha224-cbc-aes-caam)
alg: No test for echainiv(authenc(hmac(sha256),cbc(aes))) (echainiv-authenc-hmac-sha256-cbc-aes-caam)
alg: No test for authenc(hmac(sha384),cbc(aes)) (authenc-hmac-sha384-cbc-aes-caam)
alg: No test for echainiv(authenc(hmac(sha384),cbc(aes))) (echainiv-authenc-hmac-sha384-cbc-aes-caam)
alg: No test for echainiv(authenc(hmac(sha512),cbc(aes))) (echainiv-authenc-hmac-sha512-cbc-aes-caam)
alg: No test for authenc(hmac(md5),cbc(des3_ede)) (authenc-hmac-md5-cbc-des3_ede-caam)
alg: No test for echainiv(authenc(hmac(md5),cbc(des3_ede))) (echainiv-authenc-hmac-md5-cbc-des3_ede-
caam)
alg: No test for echainiv(authenc(hmac(sha1),cbc(des3_ede))) (echainiv-authenc-hmac-sha1-cbc-des3_ede-
caam)
alg: No test for echainiv(authenc(hmac(sha224),cbc(des3_ede))) (echainiv-authenc-hmac-sha224-cbc-
des3_ede-caam)
alg: No test for echainiv(authenc(hmac(sha256),cbc(des3_ede))) (echainiv-authenc-hmac-sha256-cbc-
des3_ede-caam)
alg: No test for echainiv(authenc(hmac(sha384),cbc(des3_ede))) (echainiv-authenc-hmac-sha384-cbc-
des3_ede-caam)
alg: No test for echainiv(authenc(hmac(sha512),cbc(des3_ede))) (echainiv-authenc-hmac-sha512-cbc-
des3_ede-caam)
alg: No test for authenc(hmac(md5),cbc(des)) (authenc-hmac-md5-cbc-des-caam)
alg: No test for echainiv(authenc(hmac(md5),cbc(des))) (echainiv-authenc-hmac-md5-cbc-des-caam)
alg: No test for echainiv(authenc(hmac(sha1),cbc(des))) (echainiv-authenc-hmac-sha1-cbc-des-caam)
alg: No test for echainiv(authenc(hmac(sha224),cbc(des))) (echainiv-authenc-hmac-sha224-cbc-des-caam)
alg: No test for echainiv(authenc(hmac(sha256),cbc(des))) (echainiv-authenc-hmac-sha256-cbc-des-caam)
alg: No test for echainiv(authenc(hmac(sha384),cbc(des))) (echainiv-authenc-hmac-sha384-cbc-des-caam)
alg: No test for echainiv(authenc(hmac(sha512),cbc(des))) (echainiv-authenc-hmac-sha512-cbc-des-caam)
alg: No test for authenc(hmac(md5),rfc3686(ctr(aes))) (authenc-hmac-md5-rfc3686-ctr-aes-caam)
alg: No test for seqiv(authenc(hmac(md5),rfc3686(ctr(aes)))) (seqiv-authenc-hmac-md5-rfc3686-ctr-aes-
caam)
alg: No test for authenc(hmac(sha1),rfc3686(ctr(aes))) (authenc-hmac-sha1-rfc3686-ctr-aes-caam)
alg: No test for seqiv(authenc(hmac(sha1),rfc3686(ctr(aes)))) (seqiv-authenc-hmac-sha1-rfc3686-ctr-
aes-caam)
alg: No test for authenc(hmac(sha224),rfc3686(ctr(aes))) (authenc-hmac-sha224-rfc3686-ctr-aes-caam)
alg: No test for seqiv(authenc(hmac(sha224),rfc3686(ctr(aes)))) (seqiv-authenc-hmac-sha224-rfc3686-
ctr-aes-caam)
alg: No test for authenc(hmac(sha256),rfc3686(ctr(aes))) (authenc-hmac-sha256-rfc3686-ctr-aes-caam)
```

```
alg: No test for seqiv(authenc(hmac(sha256),rfc3686(ctr(aes)))) (seqiv-authenc-hmac-sha256-rfc3686-
ctr-aes-caam)
alg: No test for authenc(hmac(sha384),rfc3686(ctr(aes))) (authenc-hmac-sha384-rfc3686-ctr-aes-caam)
alg: No test for seqiv(authenc(hmac(sha384),rfc3686(ctr(aes)))) (seqiv-authenc-hmac-sha384-rfc3686-
ctr-aes-caam)
alg: No test for authenc(hmac(sha512),rfc3686(ctr(aes))) (authenc-hmac-sha512-rfc3686-ctr-aes-caam)
alg: No test for seqiv(authenc(hmac(sha512),rfc3686(ctr(aes)))) (seqiv-authenc-hmac-sha512-rfc3686-
ctr-aes-caam)
caam algorithms registered in /proc/crypto
alg: No test for authenc(hmac(md5),cbc(aes)) (authenc-hmac-md5-cbc-aes-caam-qi)
alg: No test for echainiv(authenc(hmac(md5),cbc(aes))) (echainiv-authenc-hmac-md5-cbc-aes-caam-qi)
alg: No test for echainiv(authenc(hmac(sha1),cbc(aes))) (echainiv-authenc-hmac-sha1-cbc-aes-caam-qi)
alg: No test for authenc(hmac(sha224),cbc(aes)) (authenc-hmac-sha224-cbc-aes-caam-qi)
alg: No test for echainiv(authenc(hmac(sha224),cbc(aes))) (echainiv-authenc-hmac-sha224-cbc-aes-caam-
qi)
alg: No test for echainiv(authenc(hmac(sha256),cbc(aes))) (echainiv-authenc-hmac-sha256-cbc-aes-caam-
qi)
alg: No test for authenc(hmac(sha384),cbc(aes)) (authenc-hmac-sha384-cbc-aes-caam-qi)
alg: No test for echainiv(authenc(hmac(sha384),cbc(aes))) (echainiv-authenc-hmac-sha384-cbc-aes-caam-
qi)
alg: No test for echainiv(authenc(hmac(sha512),cbc(aes))) (echainiv-authenc-hmac-sha512-cbc-aes-caam-
qi)
alg: No test for authenc(hmac(md5),cbc(des3_ede)) (authenc-hmac-md5-cbc-des3_ede-caam-qi)
alg: No test for echainiv(authenc(hmac(md5),cbc(des3_ede))) (echainiv-authenc-hmac-md5-cbc-des3_ede-
caam-qi)
alg: No test for echainiv(authenc(hmac(sha1),cbc(des3_ede))) (echainiv-authenc-hmac-sha1-cbc-des3_ede-
caam-qi)
alg: No test for echainiv(authenc(hmac(sha224),cbc(des3_ede))) (echainiv-authenc-hmac-sha224-cbc-
des3_ede-caam-qi)
alg: No test for echainiv(authenc(hmac(sha256),cbc(des3_ede))) (echainiv-authenc-hmac-sha256-cbc-
des3_ede-caam-qi)
alg: No test for echainiv(authenc(hmac(sha384),cbc(des3_ede))) (echainiv-authenc-hmac-sha384-cbc-
des3_ede-caam-qi)
alg: No test for echainiv(authenc(hmac(sha512),cbc(des3_ede))) (echainiv-authenc-hmac-sha512-cbc-
des3_ede-caam-qi)
alg: No test for authenc(hmac(md5),cbc(des)) (authenc-hmac-md5-cbc-des-caam-qi)
alg: No test for echainiv(authenc(hmac(md5),cbc(des))) (echainiv-authenc-hmac-md5-cbc-des-caam-qi)
alg: No test for echainiv(authenc(hmac(sha1),cbc(des))) (echainiv-authenc-hmac-sha1-cbc-des-caam-qi)
alg: No test for echainiv(authenc(hmac(sha224),cbc(des))) (echainiv-authenc-hmac-sha224-cbc-des-caam-
qi)
alg: No test for echainiv(authenc(hmac(sha256),cbc(des))) (echainiv-authenc-hmac-sha256-cbc-desi-caam-
qi)
alg: No test for echainiv(authenc(hmac(sha384),cbc(des))) (echainiv-authenc-hmac-sha384-cbc-des-caam-
qi)
alg: No test for echainiv(authenc(hmac(sha512),cbc(des))) (echainiv-authenc-hmac-sha512-cbc-des-caam-
qi)
platform caam_qi: algorithms registered in /proc/crypto
caam_jr 1710000.jr: registering rng-caam
caam 1700000.crypto: caam pkc algorithms registered in /proc/crypto
[...]
```

Crypto algorithms support

Algorithms Supported in the linux kernel scatterlist Crypto API

The Linux kernel contains various users of the Scatterlist Crypto API, including its IPsec implementation, sometimes referred to as the NETKEY stack. The driver, after registering supported algorithms with the Crypto API, is therefore used to process per-packet symmetric crypto requests and forward them to the SEC hardware.

Since SEC hardware processes requests asynchronously, the driver registers asynchronous algorithm implementations with the crypto API: ahash, ablkcipher, and aead with CRYPTO_ALG_ASYNC set in .cra_flags.

Different combinations of hardware and driver software version support different sets of algorithms, so searching for the driver name in /proc/crypto on the desired target system will ensure the correct report of what algorithms are supported.

Authenticated Encryption with Associated Data (AEAD) algorithms

These algorithms are used in applications where the data to be encrypted overlaps, or partially overlaps, the data to be authenticated, as is the case with IPsec and TLS protocols. These algorithms are implemented in the driver such that the hardware makes a single pass over the input data, and both encryption and authentication data are written out simultaneously. The AEAD algorithms are mainly for use with IPsec ESP (however there is also support for TLS 1.0 record layer encryption).

CAAM drivers currently supports offloading the following AEAD algorithms:

- "stitched" AEAD: all combinations of { NULL, CBC-AES, CBC-DES, CBC-3DES-EDE, RFC3686-CTR-AES } x HMAC-{MD-5, SHA-1,-224,-256,-384,-512}
- "true" AEAD: generic GCM-AES, GCM-AES used in IPsec: RFC4543-GCM-AES and RFC4106-GCM-AES
- TLS 1.0 record layer encryption using the "stitched" AEAD cipher suite CBC-AES-HMAC-SHA1

Encryption algorithms

The CAAM driver currently supports offloading the following encryption algorithms.

Authentication algorithms

The CAAM driver's ahash support includes keyed (hmac) and unkeyed hashing algorithms.

Asymmetric (public key) algorithms

Currently, RSA is the only public key algorithm supported.

Random Number Generation

caamrng frontend driver supports random number generation services via the kernel's built-in hwrng interface when implemented in hardware. To enable:

1. verify that the hardware random device file, e.g., /dev/hwrng or /dev/hwrandom exists. If it doesn't exist, make it with:

   ```
   $ mknod /dev/hwrng c 10 183
   ```

2. verify /dev/hwrng doesn't block indefinitely and produces random data:

   ```
   $ rngtest -C 1000 < /dev/hwrng
   ```

3. verify the kernel gets entropy:

   ```
   $ rngtest -C 1000 < /dev/random
   ```

If it blocks, a kernel entropy supplier daemon, such as rngd, may need to be run. See linux/Documentation/hw_random.txt for more info.

Table 60. Algorithms supported by each interface / backend

Algorithm name / Backend	Job Ring Interface	Queue Interface	DPSEC Interface
rsa	Yes	No	No
pkcs1pad(rsa, sha*)	Yes	No	No
tls10(hmac(sha1),cbc(aes))	No	Yes	Yes

Table continues on the next page...

Table 60. Algorithms supported by each interface / backend (continued)

Algorithm name / Backend	Job Ring Interface	Queue Interface	DPSEC Interface
authenc(hmac(md5),cbc(aes))	Yes (also echainiv)	Yes (also echainiv)	Yes (also echainiv)
authenc(hmac(sha1),cbc(aes))	Yes (also echainiv)	Yes (also echainiv)	Yes (also echainiv)
authenc(hmac(sha224),cbc(aes))	Yes (also echainiv)	Yes (also echainiv)	Yes (also echainiv)
authenc(hmac(sha256),cbc(aes))	Yes (also echainiv)	Yes (also echainiv)	Yes (also echainiv)
authenc(hmac(sha384),cbc(aes))	Yes (also echainiv)	Yes (also echainiv)	Yes (also echainiv)
authenc(hmac(sha512),cbc(aes))	Yes (also echainiv)	Yes (also echainiv)	Yes (also echainiv)
authenc(hmac(md5),cbc(des3_ede))	Yes (also echainiv)	Yes (also echainiv)	Yes (also echainiv)
authenc(hmac(sha1),cbc(des3_ede))	Yes (also echainiv)	Yes (also echainiv)	Yes (also echainiv)
authenc(hmac(sha224),cbc(des3_ede))	Yes (also echainiv)	Yes (also echainiv)	Yes (also echainiv)
authenc(hmac(sha256),cbc(des3_ede))	Yes (also echainiv)	Yes (also echainiv)	Yes (also echainiv)
authenc(hmac(sha384),cbc(des3_ede))	Yes (also echainiv)	Yes (also echainiv)	Yes (also echainiv)
authenc(hmac(sha512),cbc(des3_ede))	Yes (also echainiv)	Yes (also echainiv)	Yes (also echainiv)
authenc(hmac(md5),cbc(des))	Yes (also echainiv)	Yes (also echainiv)	Yes (also echainiv)
authenc(hmac(sha1),cbc(des))	Yes (also echainiv)	Yes (also echainiv)	Yes (also echainiv)
authenc(hmac(sha224),cbc(des))	Yes (also echainiv)	Yes (also echainiv)	Yes (also echainiv)
authenc(hmac(sha256),cbc(des))	Yes (also echainiv)	Yes (also echainiv)	Yes (also echainiv)
authenc(hmac(sha384),cbc(des))	Yes (also echainiv)	Yes (also echainiv)	Yes (also echainiv)
authenc(hmac(sha512),cbc(des))	Yes (also echainiv)	Yes (also echainiv)	Yes (also echainiv)
authenc(hmac(md5),rfc3686(ctr(aes)))	Yes (also seqiv)	Yes (also seqiv)	Yes (also seqiv)

Table continues on the next page...

Table 60. Algorithms supported by each interface / backend (continued)

Algorithm name / Backend	Job Ring Interface	Queue Interface	DPSEC Interface
authenc(hmac(sha1),rfc3686(ctr(aes)))	Yes (also seqiv)	Yes (also seqiv)	Yes (also seqiv)
authenc(hmac(sha224),rfc3686(ctr(aes)))	Yes (also seqiv)	Yes (also seqiv)	Yes (also seqiv)
authenc(hmac(sha256),rfc3686(ctr(aes)))	Yes (also seqiv)	Yes (also seqiv)	Yes (also seqiv)
authenc(hmac(sha384),rfc3686(ctr(aes)))	Yes (also seqiv)	Yes (also seqiv)	Yes (also seqiv)
authenc(hmac(sha512),rfc3686(ctr(aes)))	Yes (also seqiv)	Yes (also seqiv)	Yes (also seqiv)
authenc(hmac(md5),ecb(cipher_null))	Yes	No	No
authenc(hmac(sha1),ecb(cipher_null))	Yes	No	No
authenc(hmac(sha224),ecb(cipher_null))	Yes	No	No
authenc(hmac(sha256),ecb(cipher_null))	Yes	No	No
authenc(hmac(sha384),ecb(cipher_null))	Yes	No	No
authenc(hmac(sha512),ecb(cipher_null))	Yes	No	No
rfc7539(chacha20,poly1305)	Yes (LX2160A only)	No	Yes (LX2160A only)
rfc7539esp(chacha20,poly1305)	Yes (LX2160A only)	No	Yes (LX2160A only)
gcm(aes)	Yes	Yes	Yes
rfc4543(gcm(aes))	Yes	Yes	Yes
rfc4106(gcm(aes))	Yes	Yes	Yes
ecb(aes)	Yes	No	No
ecb(des3_ede)	Yes	No	No
ecb(des)	Yes	No	No
ecb(arc4)	Yes	No	No
cbc(aes)	Yes	Yes	Yes
cbc(des3_ede)	Yes	Yes	Yes
cbc(des)	Yes	Yes	Yes
ctr(aes)	Yes	Yes	Yes
rfc3686(ctr(aes))	Yes	Yes	Yes

Table continues on the next page...

Table 60. Algorithms supported by each interface / backend (continued)

Algorithm name / Backend	Job Ring Interface	Queue Interface	DPSEC Interface
chacha20	No	No	Yes (LX2160A only)
xts(aes)	Yes	Yes	Yes
cmac(aes)	Yes	No	No
xcbc(aes)	Yes	No	No
hmac(md5)	Yes	No	Yes
hmac(sha1)	Yes	No	Yes
hmac(sha224)	Yes	No	Yes
hmac(sha256)	Yes	No	Yes
hmac(sha384)	Yes	No	Yes
hmac(sha512)	Yes	No	Yes
md5	Yes	No	Yes
sha1	Yes	No	Yes
sha224	Yes	No	Yes
sha256	Yes	No	Yes
sha384	Yes	No	Yes
sha512	Yes	No	Yes

CAAM Job Ring backend driver specifics

CAAM Job Ring backend driver (*caam_jr*) implements and utilizes the job ring interface (JRI) for submitting crypto API service requests from the frontend drivers (*caamalg*, *caamhash*, *caam_pkc*, *caamrng*) to CAAM engine.

CAAM drivers have a few options, most notably hardware job ring size and interrupt coalescing. They can be used to fine-tune performance for a particular use case.

The option *Freescale CAAM-Multicore platform driver backend* enables the basic platform driver (*caam*). All (non-DPAA2) sub-options depend on this.

The option *Freescale CAAM Job Ring driver backend (SEC)* enables the Job Ring backend (*caam_jr*).

The sub-option *Job Ring Size* allows the user to select the size of the hardware job rings; if requests arrive at the driver enqueue entry point in a bursty nature, the bursts' maximum length can be approximated etc. One can set the greatest burst length to save performance and memory consumption.

The sub-option *Job Ring interrupt coalescing* allows the user to select the use of the hardware’s interrupt coalescing feature. Note that the driver already performs IRQ coalescing in software, and zero-loss benchmarks have in fact produced better results with this option turned off. If selected, two additional options become effective:

- *Job Ring interrupt coalescing count threshold* (CRYPTO_DEV_FSL_CAAM_INTC_THLD)

  Selects the value of the descriptor completion threshold, in the range 1-256. A selection of 1 effectively defeats the coalescing feature, and any selection equal or greater than the selected ring size will force timeouts for each interrupt.

- *Job Ring interrupt coalescing timer threshold* (CRYPTO_DEV_FSL_CAAM_INTC_TIME_THLD)

  Selects the value of the completion timeout threshold in multiples of 64 SEC interface clocks, to which, if no new descriptor completions occur within this window (and at least one completed job is pending), then an interrupt will occur. This is selectable in the range 1-65535.

The options to register to Crypto API, hwrng API respectively, allow the frontend drivers to register their algorithm capabilities with the corresponding APIs. They should be deselected only when the purpose is to perform Crypto API requests in software (on the GPPs) instead of offloading them on SEC engine.

caamhash frontend (hash algorithms) may be individually turned off, since the nature of the application may be such that it prefers software (core) crypto latency due to many small-sized requests.

caam_pkc frontend (public key / asymmetric algorithms) can be turned off too, if needed.

caamrng frontend (Random Number Generation) may be turned off in case there is an alternate source of entropy available to the kernel.

Verifying driver operation and correctness

Other than noting the performance advantages due to the crypto offload, one can also ensure the hardware is doing the crypto by looking for driver messages in dmesg.

The driver emits console messages at initialization time:

```
caam algorithms registered in /proc/crypto
caam_jr 1710000.jr: registering rng-caam
caam 1700000.crypto: caam pkc algorithms registered in /proc/crypto
```

If the messages are not present in the logs, either the driver is not configured in the kernel, or no SEC compatible device tree node is present in the device tree.

Incrementing IRQs in /proc/interrupts

Given a time period when crypto requests are being made, the SEC hardware will fire completion notification interrupts on the corresponding Job Ring:

```
$ cat /proc/interrupts | grep jr
           CPU0       CPU1       CPU2       CPU3
[...]
 78:       1007          0          0          0     GICv2 103 Level     1710000.jr
 79:          7          0          0          0     GICv2 104 Level     1720000.jr
 80:          0          0          0          0     GICv2 105 Level     1730000.jr
 81:          0          0          0          0     GICv2 106 Level     1740000.jr
```

If the number of interrupts fired increment, then the hardware is being used to do the crypto.

If the numbers do not increment, then first check the algorithm being exercised is supported by the driver. If the algorithm is supported, there is a possibility that the driver is in polling mode (NAPI mechanism) and the hardware statistics in debugfs (inbound / outbound bytes encrypted / protected - see below) should be monitored.

Verifying the 'self test' fields say 'passed' in /proc/crypto

An entry such as the one below means the driver has successfully registered support for the algorithm with the kernel crypto API:

```
name         : cbc(aes)
driver       : cbc-aes-caam
module       : kernel
priority     : 3000
refcnt       : 1
selftest     : passed
internal     : no
type         : givcipher
async        : yes
blocksize    : 16
min keysize  : 16
max keysize  : 32
ivsize       : 16
geniv        : <built-in>
```

Note that although a test vector may not exist for a particular algorithm supported by the driver, the kernel will emit messages saying which algorithms weren't tested, and mark them as 'passed' anyway:

```
[...]
alg: No test for authenc(hmac(sha224),ecb(cipher_null)) (authenc-hmac-sha224-ecb-cipher_null-caam)
alg: No test for authenc(hmac(sha256),ecb(cipher_null)) (authenc-hmac-sha256-ecb-cipher_null-caam)
[...]
alg: No test for authenc(hmac(md5),cbc(aes)) (authenc-hmac-md5-cbc-aes-caam)
alg: No test for echainiv(authenc(hmac(md5),cbc(aes))) (echainiv-authenc-hmac-md5-cbc-aes-caam)
alg: No test for echainiv(authenc(hmac(sha1),cbc(aes))) (echainiv-authenc-hmac-sha1-cbc-aes-caam)
[...]
alg: No test for authenc(hmac(sha512),rfc3686(ctr(aes))) (authenc-hmac-sha512-rfc3686-ctr-aes-caam)
alg: No test for seqiv(authenc(hmac(sha512),rfc3686(ctr(aes)))) (seqiv-authenc-hmac-sha512-rfc3686-
ctr-aes-caam)
[...]
```

Examining the hardware statistics registers in debugfs

When using the JRI or QI backend, performance monitor registers can be checked, provided CONFIG_DEBUG_FS is enabled in the kernel's configuration. If debugfs is not automatically mounted at boot time, then a manual mount must be performed in order to view these registers. This normally can be done with a superuser shell command:

```
$ mount -t debugfs none /sys/kernel/debug
```

Once done, the user can read controller registers in /sys/kernel/debug/1700000.crypto/ctl. It should be noted that debugfs will provide a decimal integer view of most accessible registers provided, with the exception of the KEK/TDSK/TKEK registers; those registers are long binary arrays, and should be filtered through a binary dump utility such as hexdump.

Specifically, the CAAM hardware statistics registers available are:

fault_addr, or FAR (Fault Address Register): - holds the value of the physical address where a read or write error occurred.

fault_detail, or FADR (Fault Address Detail Register): - holds details regarding the bus transaction where the error occurred.

fault_status, or CSTA (CAAM Status Register): - holds status information relevant to the entire CAAM block.

ib_bytes_decrypted: - holds contents of PC_IB_DECRYPT (Performance Counter Inbound Bytes Decrypted Register)

ib_bytes_validated: - holds contents of PC_IB_VALIDATED (Performance Counter Inbound Bytes Validated Register)

ib_rq_decrypted: - holds contents of PC_IB_DEC_REQ (Performance Counter Inbound Decrypt Requests Register)

kek: - holds contents of JDKEKR (Job Descriptor Key Encryption Key Register)

ob_bytes_encrypted: - holds contents of PC_OB_ENCRYPT (Performance Counter Outbound Bytes Encrypted Register)

ob_bytes_protected: - holds contents of PC_OB_PROTECT (Performance Counter Outbound Bytes Protected Register)

ob_rq_encrypted: - holds contents of PC_OB_ENC_REQ (Performance Counter Outbound Encrypt Requests Register)

rq_dequeued: - holds contents of PC_REQ_DEQ (Performance Counter Requests Dequeued Register)

tdsk: - holds contents of TDKEKR (Trusted Descriptor Key Encryption Key Register)

tkek: - holds contents of TDSKR (Trusted Descriptor Signing Key Register)

For more information see section "Performance Counter, Fault and Version ID Registers" in the Security (SEC) Reference Manual (SECRM) of each SoC (available on company's website).

Note: for QI backend there is also *qi_congested*: SW-based counter that shows how many times queues going to / from CAAM to QMan hit the congestion threshold.

Kernel configuration to support CAAM device drivers

Using the driver

Once enabled, the driver will forward kernel crypto API requests to the SEC hardware for processing.

Running IPsec

The IPsec stack built-in to the kernel (usually called NETKEY) will automatically use crypto drivers to offload crypto operations to the SEC hardware. Documentation regarding how to set up an IPsec tunnel can be found in corresponding open source IPsec suite packages, e.g. strongswan.org, openswan, setkey, etc. DPAA2-specific section contains a generic helper script to configure IPsec tunnels.

Running OpenSSL

Please see Hardware Offloading with OpenSSL for more details on how to offload OpenSSL cryptographic operations in the SEC crypto engine (via cryptodev).

Executing custom descriptors

SEC drivers have public descriptor submission interfaces corresponding to the following backends:

- JRI: drivers/crypto/caam/jr.c:caam_jr_enqueue()
- QI: drivers/crypto/caam/qi.c:caam_qi_enqueue()
- DPSECI: drivers/crypto/caam/caamalg_qi2.c:dpaa2_caam_enqueue()

caam_jr_enqueue()

Name

caam_jr_enqueue — Enqueue a job descriptor head. Returns 0 if OK, -EBUSY if the ring is full, -EIO if it cannot map the caller's descriptor.

Synopsis

```
int caam_jr_enqueue (struct device *dev, u32 *desc,
 void (*cbk) (struct device *dev, u32 *desc, u32 status, void *areq),
 void *areq);
```

Arguments

dev: contains the job ring device that is to process this request.

desc: descriptor that initiated the request, same as “desc” being argued to caam_jr_enqueue.

cbk: pointer to a callback function to be invoked upon completion of this request. This has the form: callback(struct device *dev, u32 *desc, u32 stat, void *arg)

areq: optional pointer to a user argument for use at callback time.

caam_qi_enqueue()

Name

caam_qi_enqueue — Enqueue a frame descriptor (FD) into a QMan frame queue. Returns 0 if OK, -EIO if it cannot map the caller's S/G array, -EBUSY if QMan driver fails to enqueue the FD for some reason.

Synopsis

```
int caam_qi_enqueue(struct device *qidev, struct caam_drv_req *req);
```

Arguments

qidev: contains the queue interface device that is to process this request.

req: pointer to the request structure the driver application should fill while submitting a job to driver, containing a callback function and its parameter, Queue Manager S/Gs for input and output, a per-context structure containing the CAAM shared descriptor etc.

dpaa2_caam_enqueue()

Name

dpaa2_caam_enqueue — Enqueue a frame descriptor (FD) into a QMan frame queue. Returns 0 if OK, -EBUSY if QMan driver fails to enqueue the FD for some reason or if congestion is detected.

Synopsis

```
int dpaa2_caam_enqueue(struct device *dev, struct caam_request *req);
```

Arguments

dev: DPSECI device.

req: pointer to the request structure the driver application should fill while submitting a job to driver, containing a callback function and its parameter, Queue Manager S/Gs for input and output, a per-context structure containing the CAAM shared descriptor etc.

Please refer to the source code for usage examples.

Supporting Documentation

DPAA1-specific Software: Security Engine (SEC)

DPAA2-specific Software: Security Engine (SEC)

7.2.16 Time Division Multiplexing (TDM)

Description

Time Division Multiplexing (TDM) is a type of digital or analog multiplexing in which two or more signals or bit streams are transferred apparently simultaneously as sub-channels in one communication channel, but are physically taking turns on the channel. The time domain is divided into several recurrent timeslots of fixed length, one for each sub-channel. A sample byte or data block of sub-channel 1 is transmitted during timeslot 1, sub-channel 2 during timeslot 2, etc. One TDM frame consists of one timeslot per sub-channel. After the last sub-channel the cycle starts all over again with a new frame, starting with the second sample, byte or data block from sub-channel 1, etc.

TDM or Time Division Multiplexing is an essential component to run VoIP applications on NXP Platforms. Its function is to receive and send time division multiplexed voice samples on the physical TDM lines.

This document explains the procedure to test the TDM on FSL MPC85xx platforms.

The test procedure shows the method to run a small TDM demo application which transfers voice from one TDM channel to the other.

The overall TDM software stack and the data flow is depicted below. On the top is a generic TDM framework layer which can ideally integrate with any TDM driver beneath it.

Generally NXP platforms offer two types of TDM interfaces:

1. NXP TDM
2. QE based TDM

This manual specifically talks about NXP TDM

U-Boot Configuration

Compile time options

Please check the platform specific document to check if any specific u-boot configuration is required for TDM feature.

Also please ensure if there is any requirement from pin mux perspective to enable TDM.

Runtime options

Refer to platform specific document for any specific hwconfig or environment variables which may be required for TDM functionality.

Also the FXS ports location will be mentioned in the platform specific document.

Kernel Configure Options

Tree View

Below are the configure options need to be set/unset while doing "make menuconfig" for kernel

Kernel Configure Tree view options	Description

Device Drivers --->
  <*> TDM support --->
  --- TDM support
  [ ] TDM Core debugging messages (NEW)
  <M> TDM test Module
  TDM Device support --->
  <*> Driver for Freescale TDM controller
  Line Control Devices --->
  <*> Zarlink Slic intialization Module
	Enable TDM Framework
	Enable TDM test as Module
	Enable TDM driver
	Enable SLIC driver

Identifier

Below are the configure identifiers which are used in kernel source code and default configuration files.

Option	Value	Default value in BSP	Description
CONFIG_TDM	y/n/m	N	Enable / Disable TDM Framework support
CONFIG_TDM_FSL	y/n/m	N	Enable / Disable TDM driver, depends on TDM framework and CONFIG_FSL_SOC
CONFIG_SLIC_ZARLINK	y/n/m	N	Enable / Disable SLIC driver , depends on TDM driver and TDM framework, and CONFIG_FSL_ESPI
CONFIG_TDM_TEST	y/n/m	N	Enable / disable TDM test module

Device Tree Binding

Below is the definition of the device tree node required by this feature

TDM device dts entries.(as many entries as the number of TDM controllers on the platform)

Property	Type	Status	Description
compatible = "fsl,tdm1.0";	<string>		Should contain "fsl,tdm1.0"
reg = <0x16000 0x200 0x2c000 0x2000>;	<tdm-reg-offset tdm-reg-size dmac-reg-offset dmac-reg-size>		Offset and length of the register set for the NXP TDM and TDM-DMAC
interrupts = <16 8 62 8>;	<tdm-err-intr tdm-err-intr-type dmac-intr dmac-intr-type>		Defines two interrupt specifiers namely interrupt + number and interrupt type for TDM error and TDM DMAC
fsl-max-time-slots = <128>	<u32>		Maximum number of 8-bit time slots in one TDM frame that hardware supports.

SLIC device dts entries (As many entries as the number of SLICs on the platform)

Please note that the below mentioned SLIC entry is for the Legerity SLIC which is connected to the chip through SPI interface.

Property	Type	Status	Description
compatible = "zarlink,le88266";			Should be "zarlink,le88266"
reg = <1>;			Chip select number of the SPI bus SLIC is connected to
spi-max-frequency =<8000000>;			The maximum frequency the SLIC can operate at.

Below is an example device tree node required by this feature. Note that it may have differences among platforms.

```
       tdm@16000 {
               compatible = "fsl,tdm1.0";
               reg = <0x16000 0x200 0x2c000 0x2000>;
               clock-frequency = <0>;
               interrupts = <16 8 62 8>;
               phy-handle = <zarlink1>
               fsl-max-time-slots = <128>
       };


spi@7000 {
    cell-index = <0>;
    #address-cells = <1>;
    #size-cells = <0>;
    compatible = "fsl,espi";
    reg = <0x7000 0x1000>;
    interrupts = <59 0x2>;
    interrupt-parent = <&mpic>;
    mode = "cpu";
            …….
            ……..
            ……..
```

```
                legerity@0{
                        compatible = "zarlink,le88266";
                        reg = <1>;
                        spi-max-frequency = <8000000>;
                };

                legerity@1{
                        compatible = "zarlink,le88266";
                        reg = <2>;
                        spi-max-frequency = <8000000>;
                };
};
```

Source Files

The following source file are related the this feature in Linux kernel.

Source file	Purpose
include/linux/tdm.h	Header file for TDM framework
drivers/tdm/tdm-core.c	Source file for TDM framework
drivers/tdm/device/tdm_fsl.h	Header file for TDM driver
drivers/tdm/device/tdm_fsl.c	Source file for TDM driver
drivers/tdm/line_ctrl/slic_zarlink.h	Header file for SLIC driver
drivers/tdm/line_ctrl/slic_zarlink.c	Source file for SLIC driver
drivers/tdm/test/tdm_test.c	Source file for TDM test module

Verification in U-Boot

N/A

Verification in Linux

1. Attach two analog phones at the two FXS ports of the board. (Incase there are two SLIC devices there would be 4 FXS ports available).

   NOTE

   Please refer to the platform documentation for specific information on FXS ports.

2. Bring up the platform with the kernel image and dts configured as explained above.

   Look for the below mentioned messages in the kernel boot log.

   This will ensure TDM and SLIC initialization.

```
...
...

EDAC MC: Ver: 2.1.0
fsl_tdm: Freescale TDM Driver Adapter:Init
adapter [fsl_tdm] registered
SLIC: Freescale DEVELOPED ZARLINK SLIC DRIVER
##################################################
# This driver was created solely by Freescale,     #
# without the assistance, support or intellectual  #
```

```
# property of Zarlink Semiconductor. No            #
# maintenance or support will be provided by       #
# Zarlink  Semiconductor regarding this driver.    #
####################################################
SLIC probed!
SLIC config success
SLIC: product code 1 read is  4
SLIC: product code 2 read is  b3
SLIC: config read is  ff
SLIC: config read is  8a
DEV reg is 82
DEV reg after is 2
Mask reg before setting is 3f bf
Mask reg after setting is f6 f6
Read Tx Timeslot for CH1 is 0
Read Tx Timeslot for CH2 is 2
Read Rx Timeslot for CH1 is 0
Read Rx Timeslot for CH2 is 2
Operating Fun for channel 1 is 82
Cadence Timer Reg for CH1 before is 7 ff0 0
Cadence Timer Reg for CH1 after is 1 903 20
Switching control for channel 1 is 20
Operating Fun for channel 2 is a0
Cadence Timer Reg for CH2 before is 7 ff0 0
Cadence Timer Reg for CH2 after is 1 903 20
Switching control for channel 2 is 20
SLIC 1 configuration success
TDM_TEST: Test Module for Freescale Platforms with TDM support
TDM_TEST module installed
...
...
```

3. Check /proc/device-tree/soc for tdm and slic nodes.
4. Run cat /proc/interrupts to check for TDM interrupts. Following is an example log details may vary over different platforms.

```
[root@ /root]# insmod tdm_test.ko
TDM_TEST: Test Module for Freescale Platforms with TDM support
TDM Driver(ID=1)is attached with Adapterfsl_tdm(ID = 0) drv_count=1
TDM_TEST module installed
[root@ /root]# cat /proc/interrupts
           CPU0
 20:          0   OpenPIC   Level     fsldma-chan
 21:          0   OpenPIC   Level     fsldma-chan
 22:          0   OpenPIC   Level     fsldma-chan
 23:          0   OpenPIC   Level     fsldma-chan
 28:          0   OpenPIC   Level     ehci_hcd:usb1
 42:         57   OpenPIC   Level     serial
 43:          0   OpenPIC   Level     i2c-mpc, i2c-mpc
 59:          0   OpenPIC   Level     fsl_espi
 62:        993   OpenPIC   Edge      dmac_done_isr
LOC:        698   Local timer interrupts
SPU:          0   Spurious interrupts
CNT:          0   Performance monitoring interrupts
MCE:          0   Machine check exceptions
```

5. To test the TDM functionality Pick up both the phones. Anything spoken on one phone will be heard on the other.

Benchmarking

Voice must be clearly audible and must not break.

Known Bugs, Limitations, or Technical Issues

1. TDM functionality is not supported in 36bit Physical address mode. This is because of hardware limitation on current FSL platforms.
2. TDM_TEST is for demo purpose only and hence runs only for a small duration.

7.2.17 Universal Serial Bus Interfaces

See table below for USB controllers which are present on the SoCs:

SoC	No. of USB 3.0 controllers present	No. of USB 2.0 controllers present
LS1012A	1	1
LS1021A	1	1
LS1028A	2	0
LS1043A	3	0
LS1046A	3	0
LS1088A	2	0
LS2088A	2	0
LX2160A	2	0

Typical USB nodes on device trees:

- USB 3.0 controller

```
usb0: usb3@3100000 {
                                        compatible = "snps,dwc3";
                                        reg = <0x0 0x3100000 0x0 0x10000>;
                                        interrupts = <0 80 IRQ_TYPE_LEVEL_HIGH>;
                                        dr_mode = "host";
                                        snps,quirk-frame-length-adjustment = <0x20>;
                                        snps,dis_rxdet_inp3_quirk;
                                        status = "disabled";
                                        snps,incr-burst-type-adjustment = <1>, <4>,
<8>, <16>;
                                };
```

- USB 2.0 controller

```
usb1: usb2@8600000 {
                                        compatible = "fsl-usb2-dr-v2.5", "fsl-usb2-dr";
                                        reg = <0x0 0x8600000 0x0 0x1000>;
                                        interrupts = <0 139 0x4>;
                                        dr_mode = "host";
                                        phy_type = "ulpi";
                                };
```

7.2.17.1 USB 3.0 Controller (DesignWare USB3)

Description

The U-Boot and Linux kernel driver support DWC3 USB 3.0 Dual-Role-Device (DRD) controller.

U-Boot

Host Mode

With default configuration of LSDK, host mode should be ready to use, below are related CONFIG files to select.

Configure Tree View Options

Configure Tree View Options	Description
U-Boot--> USB support -->[*] Enable driver model for USB [*] xHCI HCD (USB 3.0) support [*] Designware USB3 DRD Core Support … [*] Support for NXP Layerscape on-chip xHCI USB controller … [*] USB Mass Storage support	Enables USB host controller support

Device Tree (take arch/arm/dts/fsl-ls1012a.dtsi as example)

```
 usb1: usb3@2f00000 {
            compatible = "fsl,layerscape-dwc3";
            reg = <0x0 0x2f00000 0x0 0x10000>;
            interrupts = <0 61 0x4>;
            dr_mode = "host";
        };
```

Source Files

The driver source is maintained in the Linux kernel source tree.

Source File	Description
drivers/usb/host/xhci.c	USB HOST xHCI Controller stack
drivers/usb/host/xhci.c	USB HOST xHCI Controller stack
drivers/usb/host/xhci-fsl.c	FSL USB HOST xHCI Controller driver, basing on dwc3 driver
drivers/usb/host/xhci-dwc3.c	DWC3 controller driver
drivers/usb/host/usb-uclass.c	USB host driver
common/usb.c	USB generic driver

Table continues on the next page...

Table continued from the previous page...	
Source File	**Description**
common/usb_hub.c	USB hub driver
cmd/usb.c	USB command-line support

Verification

- Enumeration
  - Plug USB drive.
  - Boot RDB board to U-Boot console, type below commands to scan USB devices

    =USB

```
=> usb start
starting USB...
USB0:   Register 200017f NbrPorts 2
Starting the controller
USB XHCI 1.00
scanning bus 0 for devices... 2 USB Device(s) found
       scanning usb for storage devices... 1 Storage Device(s) found
=> usb treed
USB device tree:
  1  Hub (5 Gb/s, 0mA)
  |  U-Boot XHCI Host Controller
  |
  +-2  Mass Storage (5 Gb/s, 224mA)
       SanDisk Extreme 4C530001060207103322
=> usb info
1: Hub,  USB Revision 3.0
 - U-Boot XHCI Host Controller
 - Class: Hub
 - PacketSize: 512  Configurations: 1
 - Vendor: 0x0000  Product 0x0000 Version 1.0
   Configuration: 1
   - Interfaces: 1 Self Powered 0mA
     Interface: 0
     - Alternate Setting 0, Endpoints: 1
     - Class Hub
     - Endpoint 1 In Interrupt MaxPacket 8 Interval 255ms

2: Mass Storage,  USB Revision 3.0
 - SanDisk Extreme 4C530001060207103322
 - Class: (from Interface) Mass Storage
 - PacketSize: 512  Configurations: 1
 - Vendor: 0x0781  Product 0x558b Version 1.0
   Configuration: 1
   - Interfaces: 1 Bus Powered 224mA
     Interface: 0
     - Alternate Setting 0, Endpoints: 2
     - Class Mass Storage, Transp. SCSI, Bulk only
     - Endpoint 1 In Bulk MaxPacket 1024
     - Endpoint 2 Out Bulk MaxPacket 1024
```

Mass Storage device read write

```
=> md a0000000
a0000000: feffe7fd f3bfffff dfffefff bff77bf2    ............{..
a0000010: efefffee 7b7f33ff 7dffef7c 7effff77    .....3.{|..}w..~
a0000020: fdaefccf 737fffbf 75ffffdf febfbffa    .......s...u....
a0000030: 7fccff4f f3ff7ffb fee6fcfc bffb3ff7    O............?..
a0000040: dfdebfcc 37bf7b37 ffefdfcc 3337fff3    ....7{.7......73
a0000050: ffeddeee 737333b7 fbefefdf fbf3f7f3    .....3ss........
a0000060: defcfffe f7bff7fb ffdfffce 3bbf77ff    ............w.;
a0000070: dfcffbef b3fb7fb6 e2dfeede b7b3bff7    ................
a0000080: feffbfec 73bf3fb3 dffaceff 3bb6b773    .....?.s....s..;
a0000090: fdcffece 7bbfbf7b fdeefdfc f3eff7f7    ....{..{........
a00000a0: dfecdffe fb3733b7 d9deffdf 737f37bf    .....37......7.s
a00000b0: c76effde faf3bb3f deffdeeb 2f7fb37b    ..n.?.......{../
a00000c0: fffcef5b 7bf333bf fedffefe 773f7377    [....3.{....ws?w
a00000d0: fbfdfdfd f7bb73f7 ffffeddd ff37bf3e    .....s......>.7.
a00000e0: dfd9fecc 3f77fbb3 77cfdeee b3f77f73    ......w?...ws...
a00000f0: cfecffde bfff33fb ffe6ffdf fb73337f    .....3.......3s.
=> mw a0000000 ffffaaaa 100
=> md a0000000
a0000000: ffffaaaa ffffaaaa ffffaaaa ffffaaaa    ................
a0000010: ffffaaaa ffffaaaa ffffaaaa ffffaaaa    ................
a0000020: ffffaaaa ffffaaaa ffffaaaa ffffaaaa    ................
a0000030: ffffaaaa ffffaaaa ffffaaaa ffffaaaa    ................
a0000040: ffffaaaa ffffaaaa ffffaaaa ffffaaaa    ................
a0000050: ffffaaaa ffffaaaa ffffaaaa ffffaaaa    ................
a0000060: ffffaaaa ffffaaaa ffffaaaa ffffaaaa    ................
a0000070: ffffaaaa ffffaaaa ffffaaaa ffffaaaa    ................
a0000080: ffffaaaa ffffaaaa ffffaaaa ffffaaaa    ................
a0000090: ffffaaaa ffffaaaa ffffaaaa ffffaaaa    ................
a00000a0: ffffaaaa ffffaaaa ffffaaaa ffffaaaa    ................
a00000b0: ffffaaaa ffffaaaa ffffaaaa ffffaaaa    ................
a00000c0: ffffaaaa ffffaaaa ffffaaaa ffffaaaa    ................
a00000d0: ffffaaaa ffffaaaa ffffaaaa ffffaaaa    ................
a00000e0: ffffaaaa ffffaaaa ffffaaaa ffffaaaa    ................
a00000f0: ffffaaaa ffffaaaa ffffaaaa ffffaaaa    ................
=> usb write a0000000 0 100
usb write: device 0 block # 0, count 256 ... 256 blocks written: OK
=> md b0000000
b0000000: 77fdff79 c97cefdb a7dfffb3 fffeddff    y..w..|.........
b0000010: fb9ff7f3 fdfeedef febf7db9 cffbccef    .........}......
b0000020: ff7ebf7b fd6efffa 5efbbfbb cfffffff    {.~...n....^....
b0000030: bbf7f7e7 fcfedcbd f7f3bff7 fedceded    ................
b0000040: df7b3337 cfcefcef b7affb7f ddcddfce    73{.............
b0000050: ffb3bdf3 dedfefed ff3bfef3 fefffdff    ..........;.....
b0000060: 333f9b37 efccffee f7bbffff 5fceefff    7.?3............_
b0000070: f7bffa37 7edeeeff ffff3ff3 fffedfee    7......~.?......
b0000080: 7b37fb3a dffefecf ffff93f5 eeceffcf    :.7{............
b0000090: ff3f1ffb fffcdcfa f77bf77b ddeffeef    ..?.....{.{.....
b00000a0: 52b77bba acfffcff bfdfbf33 feffebff    .{.R....3.......
b00000b0: ffffff7f fe6eeddd 7ffbbb3b 6dffceff    ......n.;......m
b00000c0: 3bfbbd73 fd7fedef ff73f3ef fefaedde    s..;......s.....
b00000d0: 7f77ff73 4ffdcdee 7f3b7f72 ecfbedef    s.w....Or.;.....
b00000e0: f73b7f77 fffdfffd f7f5fffb eddefefc    w.;.............
b00000f0: bfb3bfa3 cfdffcce 655fbfbb eeffcefd    ..........._e....
=> usb read b0000000 0 100
usb read: device 0 block # 0, count 256 ... 256 blocks read: OK
=> md b0000000
```

```
b0000000: ffffaaaa ffffaaaa ffffaaaa ffffaaaa    ................
b0000010: ffffaaaa ffffaaaa ffffaaaa ffffaaaa    ................
b0000020: ffffaaaa ffffaaaa ffffaaaa ffffaaaa    ................
b0000030: ffffaaaa ffffaaaa ffffaaaa ffffaaaa    ................
b0000040: ffffaaaa ffffaaaa ffffaaaa ffffaaaa    ................
b0000050: ffffaaaa ffffaaaa ffffaaaa ffffaaaa    ................
b0000060: ffffaaaa ffffaaaa ffffaaaa ffffaaaa    ................
b0000070: ffffaaaa ffffaaaa ffffaaaa ffffaaaa    ................
b0000080: ffffaaaa ffffaaaa ffffaaaa ffffaaaa    ................
b0000090: ffffaaaa ffffaaaa ffffaaaa ffffaaaa    ................
b00000a0: ffffaaaa ffffaaaa ffffaaaa ffffaaaa    ................
b00000b0: ffffaaaa ffffaaaa ffffaaaa ffffaaaa    ................
b00000c0: ffffaaaa ffffaaaa ffffaaaa ffffaaaa    ................
b00000d0: ffffaaaa ffffaaaa ffffaaaa ffffaaaa    ................
b00000e0: ffffaaaa ffffaaaa ffffaaaa ffffaaaa    ................
b00000f0: ffffaaaa ffffaaaa ffffaaaa ffffaaaa    ................
=>
```

Linux Kernel

Host Mode

With default configuration of LSDK, host mode should be ready to use, below are related CONFIGs that should have been selected.

Configure Tree View Options

Configure Tree View Options	Description

`USB support --->`
 	
`[*] xHCI HCD (USB3.0) support`
	USB host controller support.

`[*] USB Mass Storage support`	USB mass storage support.

`[*] DesignWare USB3 DRD Core support`
 	
`[*] DWc3 Mode Selection`
`[X] Dual Role mode`
	DesignWare USB3 DRD Core Support.

`Device Drivers`
`--> HID support`
`--> USB HID support`
`[*] USB HID transport layer USB HID support`
	USB HID support

Device Tree (take arch/arm/boot/dts/freescale/fsl-ls1012a.dtsi as example)

```
usb0: usb3@2f00000 {           compatible =
     "snps,dwc3";           reg = <0x0
     0x2f00000 0x0 0x10000>;           interrupts = <0
     60 0x4>;            dr_mode = "host";
     snps,quirk-frame-length-adjustment = <0x20>;
```

```
        snps,dis_rxdet_inp3_quirk;
        };
```

Source Files

The driver source is maintained in the Linux kernel source tree.

Source File	Description
drivers/usb/core/*	USB subsystem/framework
drivers/usb/host/xhci.c xhci-mem.c xhci-ring.c xhci-hub.c	USB xHCI (host) driver
drivers/usb/storage/scsiglue.c protocol.c transport.c usb.c	USB Mass Storage (device) driver

Verification

Enumeration

- Plug USB drive
- Boot RDB board to Linux console, type below commands to list USB devices(s):

```
root@ls1012ardb:~# lsusb
Bus 002 Device 002: ID 0781:558b <-- Whose 'Device' is 002 should be a USB device we found
Bus 001 Device 001: ID 1d6b:0002
Bus 002 Device 001: ID 1d6b:0003
```

- Mass Storage device read write

```
root@ls1012ardb:~# ls /dev/sd*
/dev/sda  /dev/sda1
root@ls1012ardb:~# udevadm info -q all -n /dev/sda | grep -e usb
P: /devices/platform/soc/2f00000.usb3/xhci-hcd.0.auto/usb2/2-1/2-1:1.0/host1/target1:0:0/1:0:0:0/
block/sda
S: disk/by-id/usb-SanDisk_Extreme_4C530001020308102474-0:0
S: disk/by-path/platform-xhci-hcd.0.auto-usb-0:1:1.0-scsi-0:0:0:0
E: DEVLINKS=/dev/disk/by-id/usb-SanDisk_Extreme_4C530001020308102474-0:0 /dev/disk/by-path/platform-
xhci-hcd.0.auto-usb-0:1:1.0-scsi-0:0:0:0 /dev/disk/by-uuid/928B-C6D2
E: DEVPATH=/devices/platform/soc/2f00000.usb3/xhci-hcd.0.auto/usb2/2-1/2-1:1.0/host1/
target1:0:0/1:0:0:0/block/sda
E: ID_BUS=usb
E: ID_PATH=platform-xhci-hcd.0.auto-usb-0:1:1.0-scsi-0:0:0:0
E: ID_PATH_TAG=platform-xhci-hcd_0_auto-usb-0_1_1_0-scsi-0_0_0_0
E: ID_USB_DRIVER=usb-storage
root@ls1012ardb:~# mkfs.ext2 /dev/sda1    # Format USB drive partition 1 with EXT2
mke2fs 1.42.9 (28-Dec-2013)
[ 1032.401738] urandom_read: 1 callbacks suppressed
[ 1032.401745] random: mkfs.ext2: uninitialized urandom read (16 bytes read)
[ 1032.413812] random: mkfs.ext2: uninitialized urandom read (16 bytes read)
Filesystem label=
OS type: Linux
Block size=4096 (log=2)
Fragment size=4096 (log=2)
Stride=0 blocks, Stripe width=0 blocks
3833856 inodes, 15318784 blocks
765939 blocks (5.00%) reserved for the super user
First data block=0
```

```
Maximum filesystem blocks=4294967296
468 block groups
32768 blocks per group, 32768 fragments per group
8192 inodes per group
Superblock backups stored on blocks:
        32768, 98304, 163840, 229376, 294912, 819200, 884736, 1605632, 2654208,
        4096000, 7962624, 11239424

Allocating group tables: done
Writing inode tables: done
Writing superblocks and filesystem accounting information: done
root@ls1012ardb:~# mount /dev/sda1 /mnt    # Manually mount USB drive to file system
root@ls1012ardb:~# cd /mnt
root@ls1012ardb:/mnt# dd if=/dev/zero of=./test_400MB bs=1M count=400  # Write test
400+0 records in
400+0 records out
419430400 bytes (419 MB) copied, 4.54194 s, 92.3 MB/s
root@ls1012ardb:/mnt# sync    # Make sure ./test_400MB has been written to drive
root@ls1012ardb:/mnt# md5sum test_400MB    # Read  file out, do MD5 checksum
61eabaf2bf278703738b433ff884c91f  test_400MB
```

HID use case

- — Boot RDB board to Linux console,
  - — Plug USB mouse/keyboard, then below message appears:

    ```
    root@ls1012ardb:/mnt#
    [ 3415.406370] usb 1-1: new low-speed USB device number 2 using xhci-hcd
    [ 3415.582798] input: PixArt Dell MS116 USB Optical Mouse as /devices/platform/soc/
    2f00000.usb3/xhci-hcd.0.auto/usb1/1-1/1-1:1.0/0003:413C:301A.0001/input/input0
    [ 3415.600539] hid-generic 0003:413C:301A.0001: input: USB HID v1.11 Mouse [PixArt Dell MS116
    USB Optical Mouse] on usb-xhci-hcd.0.auto-1/input0
    ```

  - — Type below commands to begin receiving data, then move mouse or press keys on keyboard, you see that some unreadable data popping up.

    ```
    f YRY f YRY f Y x f Y x f Y x f Yx f Yx
    f Y f Y f YQ f YQ f YQ f Y f Y f Y f Y f Y
    ```

- Ethernet Use case
  - — Rebuild Linux kernel, make sure your USB network card-related driver has been included. For example: TP-LINK USB 3.0 to Gigabit Ethernet Network Adapter should select below CONFIG in menuconfig:

    ```
    Symbol : USB_RTLL8152 [=y]
    Type   : tristate
    Prompt : Realtek RTL8152/RTL8153 Based USB Ethernet Adapters
        Location:
        ->Device Drivers
          ->Network device support (NETDEVICES [=Y])
    (1)            -> USB Network Adapters (USB_NET_Drivers [=y])
    Defined at drivers/net/usb/Kconfig:98
    Depends on: NRYFRBOVRD [=y] && USB_NET_Drivers [=Y]
    Selects: MII [=y]
    ```

  - — Boot RDB board to Linux console,

— Plug USB network, then below log appears:

```
root@ls1012ardb:~# [   18.677661] usb 1-1: new
      high-speed USB device number 2 using xhci-hcd[   19.529741] usb 1-1: reset
      high-speed USB device number 2 using xhci-hcd[   19.706274] random: fast init
      done[   19.742956] r8152 1-1:1.0 eth1:
      v1.09.9
```

— Configure IP and do ping test

```
root@ls1012ardb:~# ifconfig eth1 192.168.0.2
[  110.365205] IPv6: ADDRCONF(NETDEV_UP): eth1: link is not ready
root@ls1012ardb:~# [  110.394378] IPv6: ADDRCONF(NETDEV_CHANGE): eth1: link becomes ready
[  110.401079] r8152 1-1:1.0 eth1: carrier on

root@ls1012ardb:~# ping 192.168.0.1
PING 192.168.0.1 (192.168.0.1) 56(84) bytes of data.
64 bytes from 192.168.0.1: icmp_seq=2 ttl=63 time=10.876 ms
64 bytes from 192.168.0.1: icmp_seq=3 ttl=63 time=10.829 ms
64 bytes from 192.168.0.1: icmp_seq=4 ttl=63 time=10.900 ms
64 bytes from 192.168.0.1: icmp_seq=5 ttl=63 time=10.844 ms
64 bytes from 192.168.0.1: icmp_seq=6 ttl=63 time=10.908 ms
```

Speaker and Microphone

- A play utility can be used to list the available sound cards, e.g., Here Jabra 410 USB speaker is detected as a second sound card and can be addressed as –D hw:1.0 OR –c1:

```
[root@freescale ~]$ aplay -l
**** List of PLAYBACK Hardware Devices ****
  card 0: FSLVF610TWRBOAR [FSL-VF610-TWR-BOARD], device 0: HiFi sgtl5000-0 [ ]
  Subdevices: 1/1
  Subdevice #0: subdevice #0
  card 1: USB [Jabra SPEAK 410 USB], device 0: USB Audio [USB Audio]  Subdevices: 1/1  Subdevice
#0: subdevice #0
```

- Sample wav file can be played using the below command:

```
[root@freescale ~]$ aplay -D hw:1,0
LYNC_fsringing.wavPlaying WAVE 'LYNC_fsringing.wav' : Signed 16 bit Little Endian, Rate 48000 Hz,
Stereo
```

- Sample wav file can be recorded using the below command:

```
[root@freescale ~]$ arecord -f S16_LE -t wav -Dhw:1,0 -r 16000 foobar.wav -d 5
Recording WAVE 'foobar.wav' : Signed 16 bit Little Endian, Rate 16000 Hz, Mono
```

NOTE

If recorded audio is not played, try to use "-D plughw:1,0" in above command.

- Audio controls can be checked using the below command, control details, and name of the controls can be checked from output of “amixer –c1” as below:

```
[root@freescale ~]$ amixer -c1 controls
numid=3,iface=MIXER,name='PCM Playback Switch'
numid=4,iface=MIXER,name='PCM Playback Volume'
numid=5,iface=MIXER,name='Headset Capture Switch'
numid=6,iface=MIXER,name='Headset Capture Volume'
```

```
numid=2,iface=PCM,name='Capture Channel Map'
numid=1,iface=PCM,name='Playback Channel Map'

[root@freescale ~]$ amixer -c1
Simple mixer control 'PCM',0  Capabilities: pvolume pvolume-joined pswitch pswitch-joined penum
  Playback channels: Mono
  Limits: Playback 0 - 11
  Mono: Playback 4 [36%] [-20.00dB] [on]

Simple mixer control 'Headset',0  Capabilities: cvolume cvolume-joined cswitch cswitch-joined
penum
  Capture channels: Mono
  Limits: Capture 0 - 7
  Mono: Capture 5 [71%] [0.00dB] [on]
```

For Example, in above output there are two controls named “PCM” and “Headset” for Speaker and microphone respectively. Sample Audio controls Usage: a. mute/unmute

```
[root@freescale ~]$ amixer -c1 set PCM  mute
Simple mixer control 'PCM',0
  Capabilities: pvolume pvolume-joined pswitch pswitch-joined
  Playback channels: Mono
  Limits: Playback 0 - 11
  Mono: Playback 2 [18%] [-28.00dB] [off]
[root@freescale ~]$ amixer -c1 set PCM  unmute
Simple mixer control 'PCM',0
  Capabilities: pvolume pvolume-joined pswitch pswitch-joined
  Playback channels: Mono
  Limits: Playback 0 - 11
  Mono: Playback 2 [18%] [-28.00dB] [on]
Aplay utility can be used to list the available sound cards e.g. Here Jabra 410 USB speaker is
detected as a second sound card and can be addressed as -D hw:1,0 OR -c1:
```

Volume up/down – Below commands are trying to set volume to 11 and 2 performing volume up and down respectively.

```
root@freescale ~]$ amixer -c1 set PCM 11
Simple mixer control 'PCM',0
Capabilities: pvolume pvolume-joined pswitch pswitch-joined
Playback channels: Mono
Limits: Playback 0 - 11
Mono: Playback 11 [100%] [8.00dB] [on]
[root@freescale ~]$ amixer -c1 set PCM 2
Simple mixer control 'PCM',0
Capabilities: pvolume pvolume-joined pswitch pswitch-joined
Playback channels: Mono
Limits: Playback 0 - 11
Mono: Playback 2 [18%] [-28.00dB] [on]
```

.Device mode (Gadget driver)

Important note: Device mode enabling requires manually **insmod** some ko files at runtime, make sure use the ko files which built together with that kernel image, otherwise you might encounter failures like below:

```
root@ls1043a:/run/media/mmcblk0p1 # insmod libcomposite.ko
[ 2748.620682] libcomposite: version magic '4.14.47-50925-gd677346-dirty SMP preempt mod_unload
aarch64' should be '4.14.47-50925-gd224085 SMP preempt mod_unload aarch64'
insmod: ERROR: could not insert module libcomposite.ko: Invalid module format
```

- **Mass Storage gadget**

Basing on default configuration of LSDK, also select below options in Linux kernel menuconfig (follow the highlighted choice)

Configure Tree View Options

Configure Tree View Options	Description
USB Gadget support ---> <M> USB Gadget functions configurable through configfs [*] Mass storage	USB host controller support.
<M> USB Gadget precomposed configurations	USB configuration support.
<M> Mass Storage Gadget	Mass storage support.

Device Tree update, change property **dr_mode**'s data from **"host"** to **"peripheral"**, add property **maximum-speed = "super-speed";** as below:

```
usb0: usb3@2f00000 {
      compatible = "snps,dwc3";
      reg = <0x0 0x2f00000 0x0 0x10000>;
      interrupts = <0 60 0x4>;
      dr_mode = "peripheral";
      snps,quirk-frame-length-adjustment = <0x20>;
      snps,dis_rxdet_inp3_quirk;
      maximum-speed = "super-speed";
      };
```

NOTE

Make sure to modify the correct USB nodes that mapped to the physical USB port that your are verifying, and you can only change one USB node.

Source Files

Source File	Description
drivers/usb/gadget/function/storage_common.c	Common definitions for mass storage functionality
drivers/usb/gadget/function/f_mass_storage.c	Mass Storage USB Composite Function
drivers/gadget/legacy/mass_storage.c	Mass Storage USB Gadget

Verification (test with Win7 as host)

- Build kernel, then copy below ko files to an SD card.
  - ./drivers/usb/gadget/libcomposite.ko
  - ./drivers/usb/gadget/function/usb_f_mass_storage.ko
  - ./drivers/usb/gadget/legacy/g_mass_storage.ko
- Insert that SD card into RDB board SD slot.

- Boot RDB board with that Linux kernel
- In RDB board Linux console, execute below commands (assume that you copy those ko files at SD card root folder, and mount to /run/media/mmcblk0p1/)

```
root@ls1043a:/ # df
Filesystem     1K-blocks  Used Available Use% Mounted on
/dev/root          85352 65515     15430  81% /
devtmpfs         1940036     4   1940032   1% /dev
tmpfs            1961116   132   1960984   1% /run
tmpfs            1961116   172   1960944   1% /var/volatile
/dev/mmcblk0p1   3931136 32964   3898172   1% /run/media/mmcblk0p1
root@ls1043a:~#cd /run/media/mmcblk0p1/     # this is where you put your ko files
root@ls1043a:/run/media/mmcblk0p1/ # dd if=/dev/zero of=./test bs=1M count=500
root@ls1043a:/run/media/mmcblk0p1/ # insmod libcomposite.ko
root@ls1043a:/run/media/mmcblk0p1/ # insmod usb_f_mass_storage.ko
root@ls1043a:/run/media/mmcblk0p1/ # insmod g_mass_storage.ko file=/run/media/mmcblk0p1/test
[  780.758286] Mass Storage Function, version: 2009/09/11
[  780.763465] LUN: removable file: (no medium)
[  780.767791] LUN: file: /run/media/mmcblk0p1/test
[  780.772406] Number of LUNs=1
[  780.775355] g_mass_storage gadget: Mass Storage Gadget, version: 2009/09/11
[  780.782322] g_mass_storage gadget: userspace failed to provide iSerialNumber
[  780.789371] g_mass_storage gadget: g_mass_storage ready
```

- Connect USB cable with PC and RDB board
  - You can see Windows Device Manager as Linux File-Stor Gadget USB Drive.

> **NOTE**
>
> Some times you need manually allocate a drive name/letter in My Computer. After that manually format that disk to keep it in ready status.

- **Ethernet gadget**
  - Basing on default configuration of LSDK, also select below options in Linux kernel menuconfig (follow the highlighted choice)

Configure Tree View Options

Configure Tree View Options	Description
`USB Gadget support --->` `<M> USB Gadget functions configurable through configfs`	USB host controller support.
`<M> USB Gadget precomposed configurations`	USB configuration support.
`<M> Ethernet Gadget (with CDC Ethernet support)`	Ethernet gadget support.

Device Tree update, change property **dr_mode**'s data from **"host"** to **"peripheral"**, add property **maximum-speed = "super-speed";** as below:

```
usb0: usb3@2f00000 {
      compatible = "snps,dwc3";
      reg = <0x0 0x2f00000 0x0 0x10000>;
      interrupts = <0 60 0x4>;
```

```
        dr_mode = "peripheral";
        snps,quirk-frame-length-adjustment = <0x20>;
        snps,dis_rxdet_inp3_quirk;
        maximum-speed = “super-speed”;
        };
```

NOTE

Make sure to modify the correct USB nodes that mapped to the physical USB port that your are verifying, and you can only change one USB node.

Source Files

Source File	Description
drivers/usb/gadget/function/u_ether.c	Ethernet-over-USB link layer utilities for Gadget stack
drivers/usb/gadget/function/f_ecm.c	USB CDC Ethernet (ECM) link function driver
drivers/usb/gadget/function/f_subset.c	"CDC Subset" Ethernet link function driver
drivers/usb/gadget/function/f_rndis.c	RNDIS link function driver
drivers/usb/gadget/function/rndis.c	RNDIS MSG parser
drivers/usb/gadget/legacy/ether.c	Ethernet gadget driver, with CDC and non-CDC options

Verification

- Build Linux Kernel, then copy ko files to a SD card.
- Insert that SD card into RDB board.
- Connect RDB board and Windows PC host port with USB cable.
- Boot RDB board with above kernel.
- Execute below shell commands to insmod related ko files on RDB board.

```
root@ls1043a:/run/media/mmcblk0p1# insmod libcomposite.ko
root@ls1043a:/run/media/mmcblk0p1# insmod u_ether.ko
root@ls1043a:/run/media/mmcblk0p1# insmod usb_f_ecm.ko
root@ls1043a:/run/media/mmcblk0p1# insmod usb_f_ecm_subset.ko
root@ls1043a:/run/media/mmcblk0p1# insmod usb_f_rndis.ko
root@ls1043a:/run/media/mmcblk0p1# insmod g_ether.ko
[  138.046732] using random self ethernet address
[  138.051188] using random host ethernet address
[  138.055884] usb0: HOST MAC 5e:4a:86:d0:dc:b6
[  138.060219] usb0: MAC c2:53:e1:5b:d0:d9
[  138.064100] using random self ethernet address
[  138.068549] using random host ethernet address
[  138.073041] g_ether gadget: Ethernet Gadget, version: Memorial Day 2008
[  138.079653] g_ether gadget: g_ether ready
```

- Install Microsoft RNDIS driver on Windows 7 for ping test
    1. Right click Computer and select Manage. From System Tools, select Device Manager.

       It displays a list of devices currently connected with the development PC. In the list, you can see RNDIS Kitl with an exclamation mark implying that driver has not been installed.

2. Right click RNDIS Kitl and select Update Driver Software when prompted to choose how to search for device driver software, choose Browse my computer for driver software.

   Browse for driver software on your computer appears.

3. Select Let me pick from a list of device drivers on My Computer.

   The Update Driver Software - RNDIS Kitl window appears.

4. Select the device type as Select Network adapters, as RNDIS emulates a network connection.
5. Select Microsoft Corporation from the Manufacturer list in the Select Network Adapter window.
6. Select Remote NDIS compatible device from the Network Adapter frame and click Next.

   After, several minutes of installation you can see a message as "Windows has successfully updated your driver software." and the RNDIS device is ready to use.

   After, successful installation you can see RNDIS/Ethernet Gadget under Network adapters.

7. Allocate IP for USB interface to the ping test.

   On RDB board Linux console configure the network interface as shown below:

```
root@ls1043a:/run/media/mmcblk0p1 # ifconfig -a
…… # <snip>
usb0      Link encap:Ethernet  HWaddr c2:53:e1:5b:d0:d9
          BROADCAST MULTICAST  MTU:1500  Metric:1
          RX packets:0 errors:0 dropped:0 overruns:0 frame:0
          TX packets:0 errors:0 dropped:0 overruns:0 carrier:0
          collisions:0 txqueuelen:1000
          RX bytes:0 (0.0 B)  TX bytes:0 (0.0 B)

root@ls1043a:/run/media/mmcblk0p1 # ifconfig usb0 192.168.5.3
root@ls1043a:/run/media/mmcblk0p1 # ifconfig usb0
usb0      Link encap:Ethernet  HWaddr c2:53:e1:5b:d0:d9
          inet addr:192.168.5.3  Bcast:10.255.255.255  Mask:255.0.0.0
          UP BROADCAST MULTICAST  MTU:1500  Metric:1
          RX packets:0 errors:0 dropped:0 overruns:0 frame:0
          TX packets:0 errors:0 dropped:0 overruns:0 carrier:0
          collisions:0 txqueuelen:1000
          RX bytes:0 (0.0 B)  TX bytes:0 (0.0 B)
```

- Configuring Network interface on Windows 7 PC host

1. Open Network and Sharing Center in Control Panel, click the Local Area Connection <number> .

   NOTE

   The number might be different in your ENV.

2. On the Local Area Connection <number> status pop-up window, click Properties.

   The Local Area Connection Properties window opens.

3. Double-click TCP/IPv4 Version (TCP/IPv4).

   The Internet Protocol Version 4 (TCP/IPv4) Properties window appears.

4. Enter the IP address, Subnet mask and click OK.

   On the RDB board Linux console, the following ping test begins:

```
root@ls1043a:/run/media/mmcblk0p1/ # ping 192.168.5.2
PING 192.168.5.2 (192.168.5.2) 56(84) bytes of data.
64 bytes from 192.168.5.2: icmp_seq=1 ttl=128 time=3.17 ms
64 bytes from 192.168.5.2: icmp_seq=2 ttl=128 time=1.93 ms
```

```
64 bytes from 192.168.5.2: icmp_seq=3 ttl=128 time=1.04 ms
64 bytes from 192.168.5.2: icmp_seq=4 ttl=128 time=1.22 ms
64 bytes from 192.168.5.2: icmp_seq=5 ttl=128 time=1.81 ms
64 bytes from 192.168.5.2: icmp_seq=6 ttl=128 time=1.54 ms
64 bytes from 192.168.5.2: icmp_seq=7 ttl=128 time=1.84 ms
64 bytes from 192.168.5.2: icmp_seq=8 ttl=128 time=1.49 ms
64 bytes from 192.168.5.2: icmp_seq=9 ttl=128 time=0.633 ms
64 bytes from 192.168.5.2: icmp_seq=10 ttl=128 time=0.915 ms
```

OTG mode

USB On-The-Go (USB OTG or OTG) is a specification that allows USB devices, such as tablets or smartphones, to act as a host. This allows other USB devices, such as USB flash drives, digital cameras, mice or keyboards, to attach to host devices via an OTG cable. The Layerscape platform can also allows automatic role switching if an USB device is connected to host device via an ordinary micro-B plug USB at runtime.

NOTE

- For OTG feature, only support High-speed connection is supported, super-speed is not supported.
- This sections provides an example for configuring Layerscape DWC3 controller to act as host or device (for device mode, act as a Ethernet gadget). Please note that HNP and SRP protocol is not supported.

Based on default configuration of LSDK, select highlighted options in Linux kernel menuconfig.

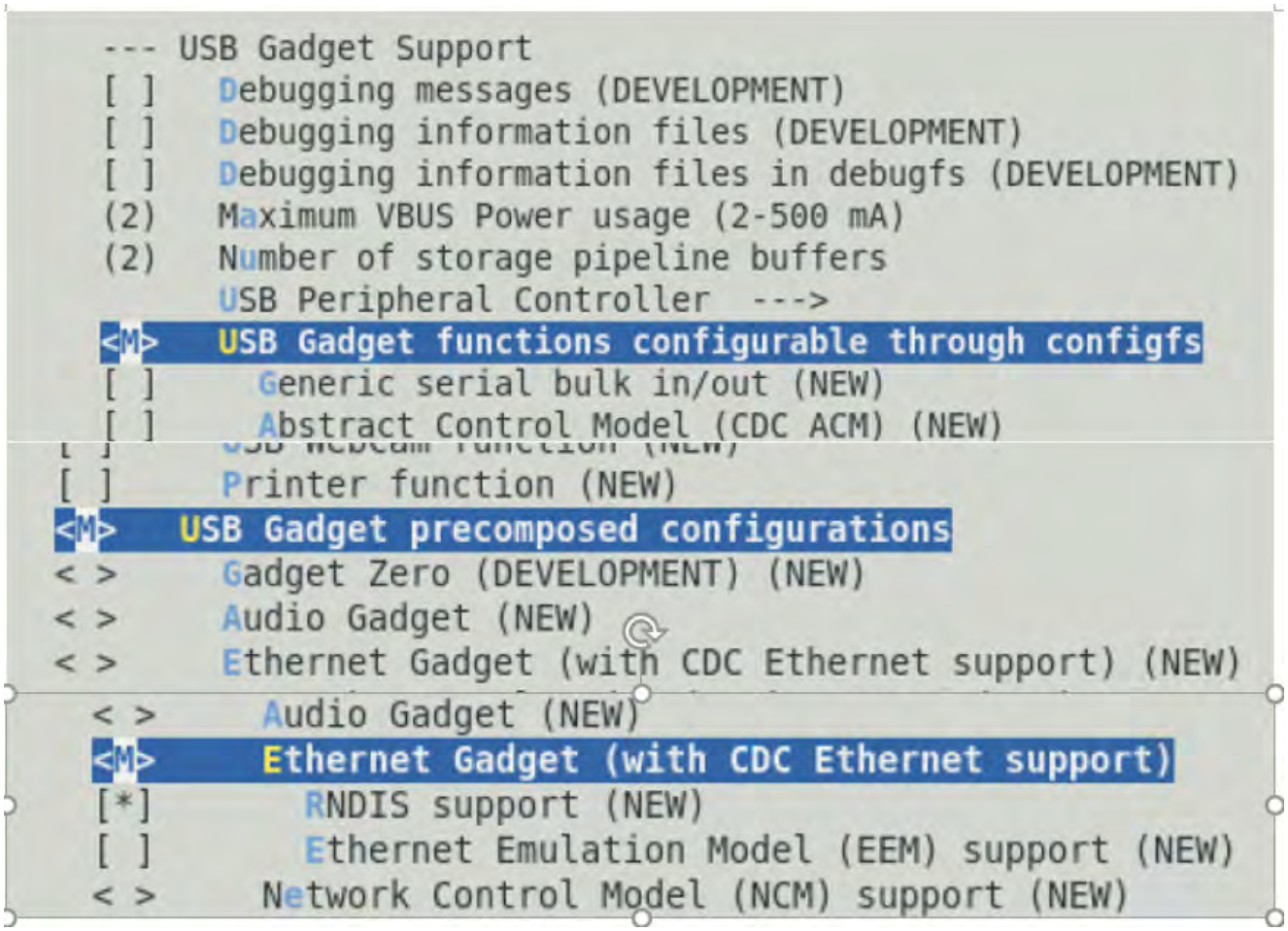

Figure 36. Linux kernel menuconfig

Device Tree

- In USB DWC3 node, change the value of property `dr_mode` from "`host`" to "`otg`":

```
usb1: usb@3110000 {
            compatible = "fsl,ls1028a-dwc3", "snps,dwc3";
            reg = <0x0 0x3110000 0x0 0x10000>;
            interrupts = <GIC_SPI 81 IRQ_TYPE_LEVEL_HIGH>;
            dr_mode = "otg";
            snps,dis_rxdet_inp3_quirk;
            snps,quirk-frame-length-adjustment = <0x20>;
            snps,incr-burst-type-adjustment = <1>, <4>, <8>, <16>;
};
```

NOTE

— You can only change one USB node. Make sure that you modify only the USB node mapped to the physical USB port that you want to verify.

— In default LSDK 5.4 kernel (LSDK 20.03 release onward), the following USB ports on respective Layerscape boards are enabled for OTG feature. Other Layerscape boards include Micro-AB port that can be enabled for OTG, if required.

Layerscape board	OTG support?	USB port supporting OTG
LS1028ARDB	Y	TYPE-C
LS1046ARDB	Y	USB3.0 MICRO-AB
LS2088ARDB	Y	USB3.0 MICRO-AB

Source files

- For host mode, see 'Host mode' of Linux Kernel part.
- For device mode, see 'Ethernet gadget' part.

Verification

- Act as host
  - Make sure the board has the OTG port:
    - USB 3.0 Micro-AB Receptacle

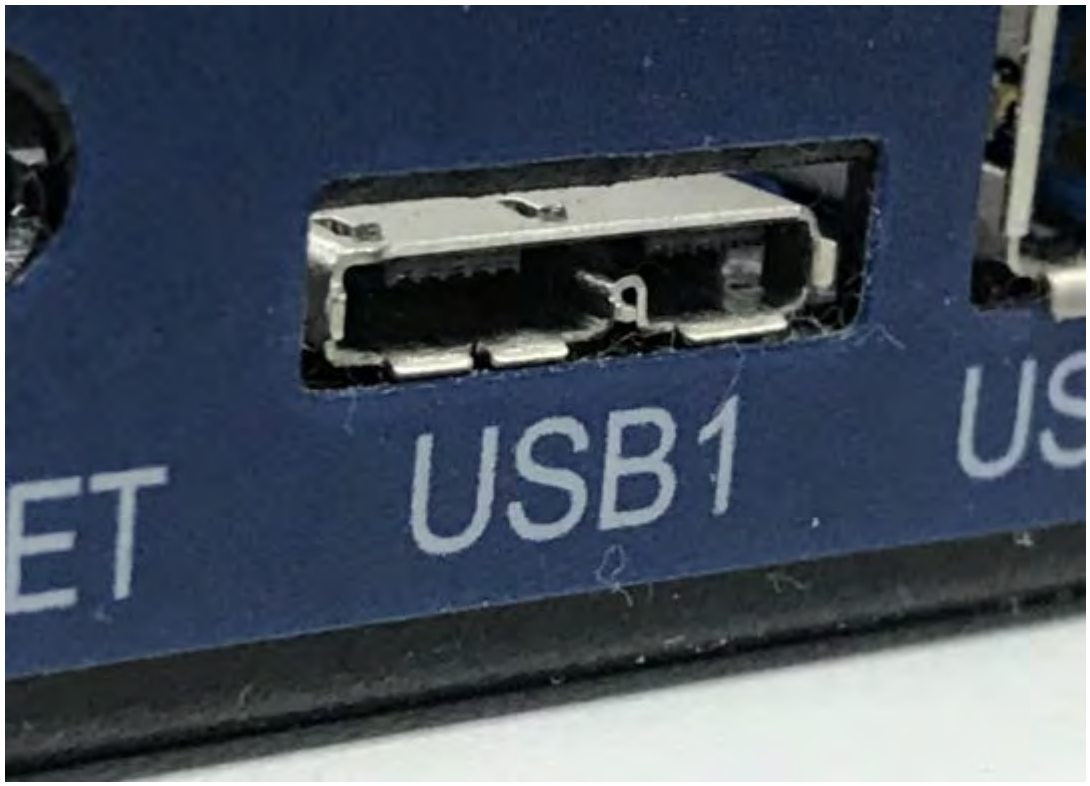

Figure 37. USB 3.0 Micro-AB Receptacle

- or TYPE-C Receptacle

Figure 38. TYPE-C Receptacle

— Boot RDB board with customized kernel

— Plug an USB 2.0/3.0 OTG or USB3.0 Type-C cable to the downstream port shown above.

  ◦ USB 2.0 OTG cable

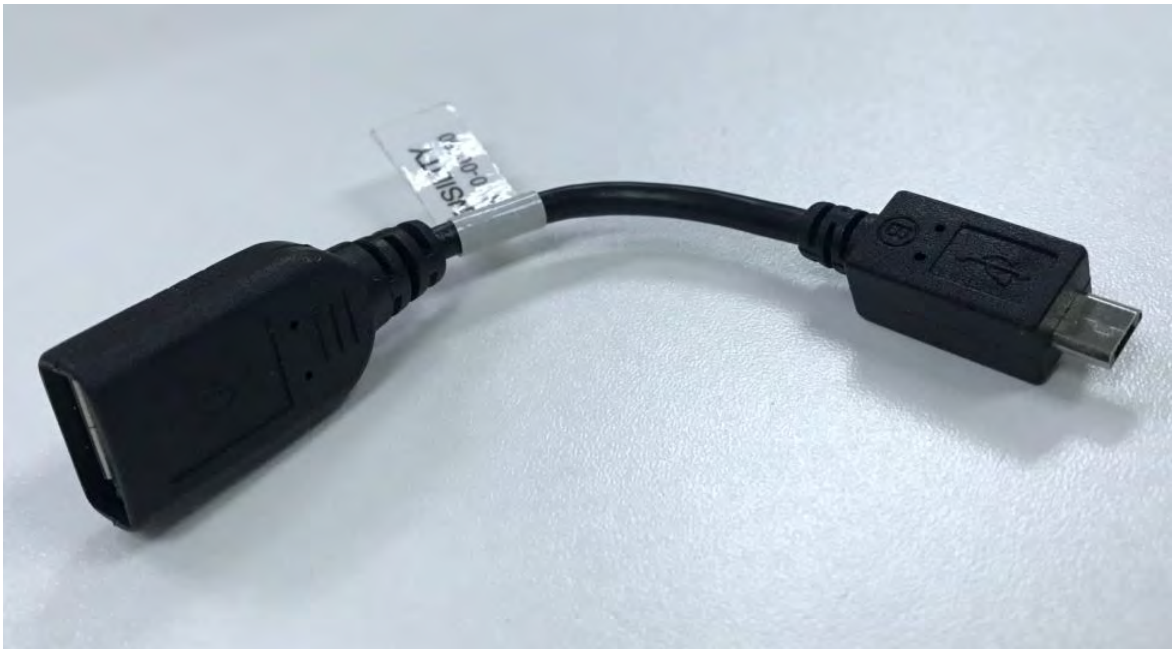

Figure 39. USB 2.0 OTG cable

◦ USB 3.0 OTG cable

Figure 40. USB 3.0 OTG cable

◦ USB 3.0 Type-C cable

Figure 41. USB 3.0 Type-C cable

— Verify USB host function with an USB Mass Storage drive.

◦ See the verification steps of Linux kernel's 'Host mode' part for details.

- Act as device
  - — Make sure the board has the OTG port, see 'Act as host' for details.
  - — Boot RDB board with customized kernel.
  - — Plug an USB B-plug cable to the port shown above.
    - ◦ USB 2.0 B-plug cable

Figure 42. USB 2.0 B-plug cable

◦ USB 3.0 B-plug cable

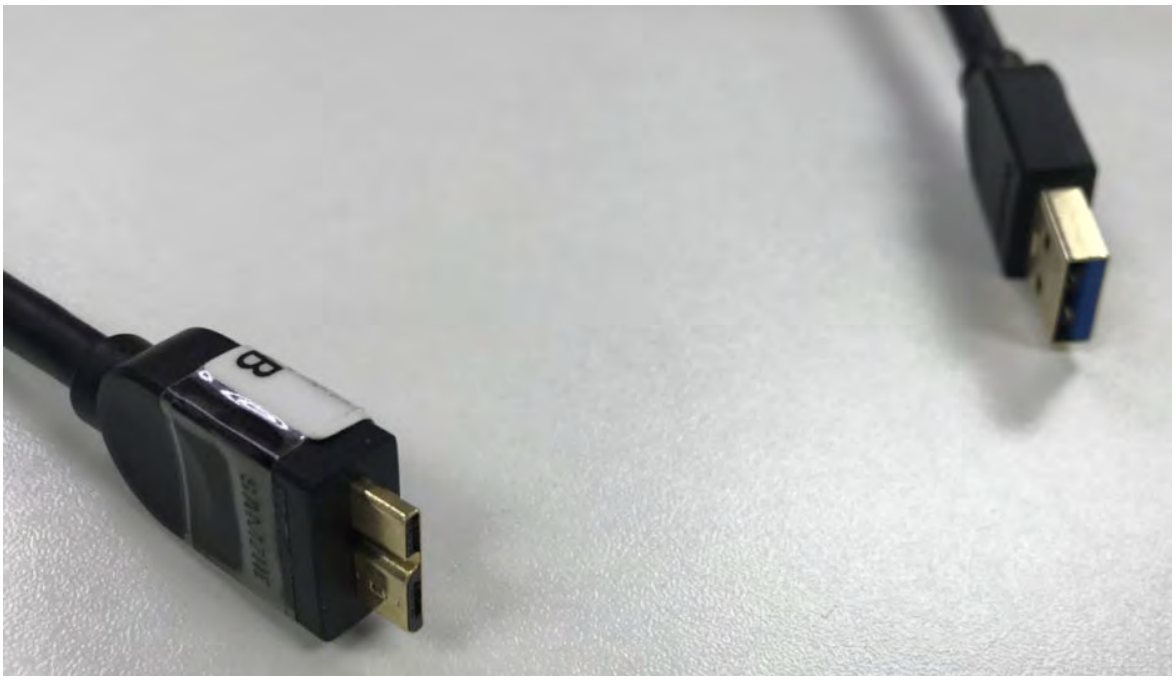

Figure 43. USB 3.0 B-plug cable

◦ USB Type-C B-plug cable

Figure 44. USB Type-C B-plug cable

— Verify USB device mode with Ethernet gadget function

◦ See the verification steps of Linux kernel's 'Device mode' part for details (search 'Ethernet gadget')

Known Bugs, Limitations, or Technical Issues

- Linux only allows one peripheral at one time. Make sure that when one of DWC3 controllers is set as peripheral, then the others should not be set to the same mode.

- For USB host mode, some Pen drives such as Kingston / Transcend / SiliconPower / Samtec might have a compatibility issue.
- Some USB micro ports might have OTG3.0 cable compatibility issue. An OTG 2.0 cable and USB standard port works fine.

7.2.17.2 USB 2.0 Controller

(**Freescale multi-port host and/or dual-role USB controller**)

U-Boot

Host Mode

Basing on default configuration of LSDK, make sure to select the configs below:

Configure Tree View Options

Configure Tree View Options	Description
`USB support ---> [*] EHCI HCD (usb 2.0) Support`	Enables USB host controller support
`[*] USB Mass Storage Support`	Enables USB host controller support.

Source Files

The driver source is maintained in the Linux kernel source tree.

Source File	Description
drivers/usb/host/ehci-hcd	USB HOST xHCI Controller stack
drivers/usb/host/ehci-fsl.c	FSL USB HOST xHCI Controller driver, basing on dwc3 driver
drivers/usb/host/usb-uclass.c	USB host driver
common/usb.c	USB generic driver
common/usb_hub.c	USB hub driver
cmd/usb.c	USB command-line support

Verification

- Enumeration
  - Refer to USB 3.0 controller test steps.

Mass Storage

- Refer to USB 3.0 controller test steps.

Linux Kernel

Host Mode

Basing on default LSDK config, make sure to select CONFIGs below:

Configure Tree View Options

Configure Tree View Options	Description

`USB support --->`
 	
`[*] Support for Host-side USB`
	USB host controller support.

`[*] EHCI HCD (USB 2.0) support`	USB HCD support.
`[*] USB Mass Storage support`	USB mass storage support.
`<*> Support for Freescale PPC on-chip EHCI USB controller` `[*] EHCI support for PPC USB controller on OF platform bus`	USB EHCI support

Device Tree

```
usb@22000 {
       #address-cells = <1>;
       #size-cells = <0>;
       compatible = "fsl-usb2-<controller-type>-v<controller version>",
             "fsl-usb2-<controller-type>";
       reg = <0x22000 0x1000>;
       interrupt-parent = <&mpic>;
       interrupts = <28 0x2>;
       phy_type = "ulpi";                        /* ulpi/utmi/utmi_dual */
       dr_mode = "host"                           /* host, peripheral */
};
```

NOTE

controller-type: dr(dual-role), mph(multi-port-host) controller-version: 1.6, 2.2, or earlier default mode is always host.

Source Files

The driver source is maintained in the Linux kernel source tree.

Source File	Description
drivers/usb/core/*	USB subsystem/framework
drivers/usb/host/ehci-hcd.c	USB EHCI (host) driver
drivers/usb/host/ehci-fsl.c fsl-mph-dr-of.c	Freescale multi-port host and/or dual-role USB2.0 controller driver
drivers/usb/storage/scsiglue.c protocol.c transport.c usb.c	USB Mass Storage (device) driver

Verification

- Refer to USB 3.0 controller test steps.
- **Device mode (Gadget driver)**
- **Ethernet gadget**

  Basing on default configuration of LSDK config, make sure to select config files below:

Configure Tree View Options

Configure Tree View Options	Description
`<*> Freescale Highspeed USB DR Peripheral Controller`	Freescale USB host controller support.
`<M> USB Gadget functions configurable through configfs`	Configuration support.
`<M> USB Gadget precomposed configurations`	USG gadget support
`<M> Ethernet Gadget (with CDC Ethernet support)`	USB ethernet support
`[*]  RNDIS support`	USB RNDIS gadget support

Device tree

```
usb@22000 {
        #address-cells = <1>;
        #size-cells = <0>;
        compatible = "fsl-usb2-<controller-type>-v<controller version>",
              "fsl-usb2-<controller-type>";
        reg = <0x22000 0x1000>;    /* specifies register base addr, soc dependent */
        interrupt-parent = <&mpic>;
        interrupts = <28 0x2>;     /* specifies usb interrupt line, soc dependent */
        phy_type = "ulpi";         /* phy can be ulpi(external)/utmi(internal) */
        dr_mode = "peripheral"     /* this entry specifies usb mode */
 };
```

NOTE

Controller-type: dr(dual-role), mph(multi-port-host) controller-version: 1.6, 2.2, or earlier default mode is always host. It can be either changed to peripheral inside the dts entry like above. In this case re-compilation of dts is required. DR mode can also be changed to peripheral via U-Boot command line. This will not require DTS recompilation, and can work with default DTS For USB1 controller.

```
=> setenv hwconfig 'usb1:dr_mode=peripheral,phy_type=<ulpi/utmi>
```

Source Files

Source File	Description
drivers/usb/host/fsl-mph-dr-of.c	Freescale dual-role USB2.0 controller driver
drivers/usb/gadget/function/u_ether.c	Ethernet-over-USB link layer utilities for Gadget stack
drivers/usb/gadget/function/f_ecm.c	USB CDC Ethernet (ECM) link function driver
drivers/usb/gadget/function/f_subset.c	"CDC Subset" Ethernet link function driver
drivers/usb/gadget/function/f_rndis.c	RNDIS link function driver
drivers/usb/gadget/function/rndis.c	RNDIS MSG parser
drivers/usb/gadget/legacy/ether.c	Ethernet gadget driver, with CDC and non-CDC options

Verification

- Refer to USB 3.0 controller test steps.

7.2.18 Graphics processing unit (GPU)

The GPU driver supports NXP Graphics Processing Unit (GPU) and it is provided only as a module.

1. Compiling and installing GPU kernel driver:
   a. Download GPU kernel driver source:

```
$ wget https://www.nxp.com/lgfiles/sdk/lsdk2004/gpu-module-lsdk2004.bin
$ chmod a+x gpu-module-lsdk2004.bin
$ ./gpu-module-lsdk2004.bin
```

   Press Y to accept the EULA license

```
$ cd gpu-module
$ export KERNEL_DIR=<path-to-linux> ARCH=arm64 CROSS_COMPILE=<arm64-toolchain>
$ make
```

   b. Once the `galcore.ko` is generated, it can be installed using this command:

```
$ insmod galcore.ko
```

2. Download GPU libraries:

```
$ wget https://www.nxp.com/lgfiles/sdk/lsdk2004/gpulib-lsdk2004.bin
$ chmod a+x gpulib-lsdk2004.bin
$ ./gpulib-lsdk2004.bin
```

   Press Y to accept the EULA license.

All the GPU libraries and demos are included in this repository.

NOTE

If you are using LSDK v20.04 release, all the above steps are already been executed.

Test procedure

Follow the below procedure to use GPU.

1. Boot up the kernel, then install the GPU driver:

   ```
   root@localhost:~# modprobe galcore
   ```

   Check the kernel log:

   ```
   root@localhost:~# dmesg | tail
   ```

   The messages appear as follows:

   ```
   ...
   Galcore version 6.2.4.163672
   ...
   ```

2. All the test cases are located under the **/opt** directory:

   ```
   root@localhost:/opt# ls /opt
   cl11  es20  tiger  vdk
   ```

   a. OpenCL demo

   Below is the FFT as an example:

   ```
   root@ localhost: cd /opt/cl11/fft
   root@localhost:/opt/cl11/fft# ./fft 128
   Block size: 16
   Print result: yes
   Initializing device(s)...
   Get the Device info and select Device...
   # of Devices Available = 1
   # of Compute Units = 1
   # compute units = 1
   Creating Command Queue...
   log2(fft size) = log2(128)=7
   Compiling  radix-2 FFT Program for GPU...
   creating radix-2 kernels...
   Creating kernel fft_radix2 0 (p=1)...
   Creating kernel fft_radix2 1 (p=2)...
   Creating kernel fft_radix2 2 (p=4)...
   Creating kernel fft_radix2 3 (p=8)...
   Creating kernel fft_radix2 4 (p=16)...
   Creating kernel fft_radix2 5 (p=32)...
   Creating kernel fft_radix2 6 (p=64)...
   Setting kernel args for kernel 0 (p=1)...
   Setting kernel args for kernel 1 (p=2)...
   Setting kernel args for kernel 2 (p=4)...
   Setting kernel args for kernel 3 (p=8)...
   Setting kernel args for kernel 4 (p=16)...
   Setting kernel args for kernel 5 (p=32)...
   Setting kernel args for kernel 6 (p=64)...
   running kernel 0 (p=1)...
   running kernel 1 (p=2)...
   running kernel 2 (p=4)...
   running kernel 3 (p=8)...
   running kernel 4 (p=16)...
   running kernel 5 (p=32)...
   ```

```
running kernel 6 (p=64)...
Kernel execution time on GPU (kernel 0) :   0.000342 seconds
Kernel execution time on GPU (kernel 1) :   0.000215 seconds
Kernel execution time on GPU (kernel 2) :   0.000002 seconds
Kernel execution time on GPU (kernel 3) :   0.000600 seconds
Kernel execution time on GPU (kernel 4) :   0.000655 seconds
Kernel execution time on GPU (kernel 5) :   0.000821 seconds
Kernel execution time on GPU (kernel 6) :   0.000868 seconds
Total Kernel execution time on GPU :   0.003503 seconds
Successful.
```

b. OpenGLES demo

```
root@localhost:~# weston --tty=1 &
root@ localhost: cd /opt/es20/vv_launcher
root@localhost:/opt/es20/vv_launcher # ./vv_launcher
```

c. OpenVG demo

```
root@localhost:~# weston --tty=1 &
root@localhost:~# cd /opt/tiger/
root@localhost:/opt/tiger# ./tiger
```

d. OpenVDK demo

```
root@localhost:~# weston --tty=1 &
root@localhost:~# cd /opt/vdk
root@localhost:/opt/vdk# ./tutorial1
```

Known issue

- GPU driver does not support SMMU feature. When SMMU is enabled, GPU will not work. To disable SMMU, add the following to bootargs:

```
iommu.passthrough=1 arm-smmu.disable_bypass=0
```

7.2.19 LCD and display transmitter controller

Description

This section describes how to configure and test LCD and Display Transmitter Controller drivers for the LS1028ARDB. The Display Transmitter Controller offers multi-protocol support of standards such as DisplayPort v1.3 and eDP v1.4.

The LCD and Display Transmitter Controller device drivers can be built in the kernel image or built as kernel modules.

RCW configuration

The following table describes RCW for Display Transmitter and LCD controller on the LS1028ARDB.

Board	RCW
LS1028ARDB	HWA_CGA_M3_CLK_SEL = 2

Kernel configure options tree view

The following table describes the tree view of the kernel configuration options.

Options	Description
Device Drivers ---> Graphics support ---> <M> IPUv3 core support <M> Direct Rendering Manager (XFree86 4.1.0 and higher DRI support) --->Arm devices --->[M] Arm Mali Display Processor [M] DRM Support for Freescale i.mx [M] IMX8 HD Display Controller Common Clock Framework--->[*] Clock driver for LS1028A Display output	Enable IPUv3 Core, LCD controller driver, DRM driver, Display Transmitter Controller driver, and Display pixel clock driver.

Identifier

Below are the configure identifiers which are used in kernel source code and default configuration files.

Option	Values	Default Value	Description
CONFIG_DRM	y/m/n	m	Enable DRM driver support
CONFIG_DRM_MALI_DISPLAY	y/m/n	m	Enable LCD controller driver
CONFIG_DRM_IMX	y/m/n	m	Display Transmitter controller driver needed for enable i.MX DRM driver
CONFIG_DRM_IMX_HDP	y/m/n	m	Enable Display Transmitter controller driver
CONFIG_MX8_HDP	y/m/n	m	Enable Display Transmitter controller common API driver
CONFIG_IPUV3_CORE	y/m/b	m	i.MX DRM divers needed for enable IPUV3_CORE
CONFIG_CLK_LS1028A_PLLDIG	y/m/n	y	Display pixel clock driver

Source files

The driver source is maintained in the Linux kernel source tree.

Source File	Description
drivers/gpu/drm/arm/malidp_*	LCD controller driver source
drivers/gpu/drm/imx/hdp	Display Transmitter controller driver source
drivers/mxc/hdp/	Display Transmitter controller API common source
drivers/clk/clk-plldig.c	Display output interface pixel clock driver source

Device Tree Binding

The following is default device tree configuration for LS1028A RDB board:

```
&hdptx0 {
         fsl,no_edid;
         resolution = "3840x2160@60",
                      "1920x1080@60",
                      "1280x720@60",
                      "720x480@60";
         lane_mapping = <0x4e>;
     edp_link_rate = <0x6>
     edp_num_lanes = <0x4>;
         status = "okay";
};
```

If there is no Extended Display Identification Data (EDID) supported by display panel, “fsl, no_edid” is required specify no_edid mode is used. For this case, kernel driver has some built-in display resolution list with related display parameters which are defined in “edid_cea_modes” data structure in driver imx-hdp.c, these built-in parameters can be modified if needed, or some new resolution can be added in this list. Device tree “resolution” property is used to specify which resolutions in built-in resolution list is supported by the display panel.

For edid mode, EDID data is read from the display panel, then the display parameters together with display capability can be gathered from EDID data, display driver uses these parameters to initialize DP and LCDC. In this case, remove the “fsl, no_edid” and “resolution” property from dts.

Device Tree Configuration for eDP

Currently LS1028ARDB board has no eDP port available, the following information is just for your reference.

In order to connect to eDP panel, “fsl, edp” property has to be added in device tree display node and also need to specify link rate by using “edp_link_rate” property, 0x14 is used for 4k resolution and 0xa is used for 1080p resolution. “edp_num_lanes” is used to specify how many lanes are used by eDP port.

The following are dts example for 4k and 1080p eDP display panel:

- 4k@60

```
&hdptx0 {
     fsl,edp;
         fsl,no_edid;
         resolution = "3840x2160@60",
                      "1920x1080@60",
                      "1280x720@60",
                      "720x480@60";
         lane_mapping = <0x4e>;
     edp_link_rate = <0x14>
     edp_num_lanes = <0x4>;
         status = "okay";
};
```

- 1080p@60

```
&hdptx0 {
        fsl,edp;
             fsl,no_edid;
             resolution = "3840x2160@60",
                              "1920x1080@60",
                          "1280x720@60",
                              "720x480@60";
              lane_mapping = <0x4e>;
         edp_link_rate = <0xa>
```

```
          edp_num_lanes = <0x2>;
               status = "okay";
};
```

Display pixel clock configuration

LS1028A has a PLL to provide pixel clock both for LCDC and DP, the input reference clock frequency of PLL is 27 MHz, by using programmable digital interface, it can provide pixel clock with frequency from 27 MHz to 594 MHz.

Clock configure relationship are as seen below, further details can be found in LS1028A Reference Manual.

The relationship between input and output frequency is determined by programming the PLLDIG_PLLDV, PLLDIG_PLLCAL3, and PLLDIG_PLLFD registers, and calculated according to the following equation:

The relationship between the VCO frequency (f_{VCO}) and the output frequency of the PLL is determined by the PLLDIG_PLLDV and PLLDIG_PLLFD registers, according to the following equation:

$$f_{pll\_phi} = f_{pll\_ref} \times \left(\frac{PLLDV[MFD] + \frac{PLLFD[MFN]}{20480}}{PLLDV[PREDIV] \times PLLDV[RFDPHI]} \right)$$

Figure 45. PLL PHI frequency

$$f_{pll\_VCO} = \frac{f_{pll\_ref}}{PLLDV[PREDIV]} \times \left(PLLDV[MFD] + \frac{PLLFD[MFN]}{20480} \right)$$

Figure 46. PLL VCO frequency

When programming the PLL, user software must not violate the maximum system clock frequency or max/min VCO frequency specification of the PLL.

Currently, the fractional divider is supported on LS1028A. So, the PLL can cover almost any VCO frequency from 650 MHz to 1300 MHz.

In the above two calculation formulas:

- The ‘fpll_phi’ value is equivalent to required pixel clock frequency.
- The ‘fpll_ref’ is the reference clock, it is 27MHz.
- PLLDV[PREDIV] value is always '1'.
- By default, the MFD(PLLDV[MFD]) value is 44, PLLFD[MFN] is zero, VCO(fpll_vco) frequency value is 1188 MHz.
- If VCO frequency is indivisible by required pixel clock frequency (fpll_phi), fractional function will be used, then PLLFD[MFN] will be calculated to get VCO frequency which can be divisible by required pixel clock frequency.
- The range of VCO frequency is from 650Mhz to 1300MHz.

For example, if required pixel clock frequency is 594 MHz, because default VCO frequency 1188 is divisible by 594, so PLLDV[RFDPHI] =2, PLLDV[MFD] = 44, and PLLFD[MFN] = 0. But if required pixel clock frequency is 533.25, because default VCO frequency 1188 is indivisible by 533.25, so fractiona function need to be used, the PLL software driver will get a best output pixel clock frequency, and finally PLLDV[MFD] = 39, PLLFD[MFN] = 10240, PLLDV[RFDPHI] = 2, so the output VCO frequency will be 1066.5 MHz and pixel clock frequency will be 533.25 MHz.

The VCO frequency of this PLL cannot be changed during runtime, it can be changed only at startup. Therefore, the output frequencies are limited and might not match the requested frequency. To work around this restriction, the user can specify the required VCO frequency value in DTS.

The following parameters for different pixel clock frequency with best MFD(44) value are verified:

Pixel Clock Frequency (MHz)	MULT(MFD)	DIV(rfdphi1)	Actual Frequency (MHz)	Differences (MHz)
27	44	44	27	0
54	44	22	54	0
74.25	44	16	74.25	0
99	44	12	99	0
148.5	44	8	148.5	0
198	44	6	198	0
297	44	4	297	0
594	44	2	594	0
40	40	27	40	0
108	44	11	108	0
135	40	8	135	0
162	42	7	162	0
396	44	3	396	0
536	39	2	526.5	9.5
533.25	39	2	526.5	6.27
74.44	44	16	74.25	0.19
27.027	44	44	27	0.027

User can specify the required VCO frequency:

- User can add VCO frequency as a DT node in the dts file to drive the request rate. For more information, refer to DT bindings (*fsl, plldig.yaml*)

```
&dpclk {
                        vco-frequency = <1066500000>;
                        status = "okay";
};
```

Verification in Linux

By default, DisplayPort drivers in LSDK supports four resolutions: 480p (720x480p60), 720p (1280x720p60), 1080p (1920x1080p60) and 4k (3840x2160p60).

Follow this procedure to provide support for 480p, 720p, 1080p, or 4k resolution with DisplayPort.

1. Build DP firmware by using flex-builder. Execute the following command:

   ```
   flex-builder  -c dp_firmware_cadence
   ```

   Then DP firmware “ls1028a-dp-fw.bin” together with EULA file can be found in the directory ‘build/firmware/dp_firmware_cadence/dp/’.

2. Loading DP firmware in U-Boot

HDP firmware binary is loaded during U-Boot. At U-Boot prompt, copy the firmware binary from any storage medium (NOR flash or SD/eMMC) to DDR memory. Use the following command to load the binary:

```
=> hdp load <address > <offset>
```

where:

- address - address where the firmware binary starts in DDR memory
- offset - IRAM offset in the firmware binary (8192 default)

For example: `=>hdp load 0x98000000 0x2000`

If flash images are built by flex-builder, DP firmware will be burn in Flash or SD card. To know about the location of DP firmware, see LS1028A Memory Layout. Use the following commands to load DP firmware at U-Boot:

a. Get DP firmware with XSPI flash boot:

```
=> run xspi_hdploadcmd

Trying load HDP firmware from FlexSPI...
SF: Detected mt35xu02g with page size 256 Bytes, erase size 128 KiB, total 256 MiB
device 0 offset 0x940000, size 0x30000
SF: 196608 bytes @ 0x940000 Read: OK
Loading hdp firmware from 0x00000000a0000000 offset 0x0000000000002000
Loading hdp firmware Complete
```

b. Get DP firmware with SD boot

```
=> run sd_hdploadcmd
Trying load HDP firmware from SD..
Device: FSL_SDHC
Manufacturer ID: 3
OEM: 5054
Name: SL16G
Bus Speed: 50000000
Mode : SD High Speed (50MHz)
Rd Block Len: 512
SD version 3.0
High Capacity: Yes
Capacity: 14.5 GiB
Bus Width: 4-bit
Erase Group Size: 512 Bytes

MMC read: dev # 0, block # 18944, count 512 ... 512 blocks read: OK
Loading hdp firmware from 0x00000000a0000000 offset 0x0000000000002000
Loading hdp firmware Complete
```

c. Get DP firmware with EMMC boot

```
=> run emmc_hdploadcmd
Trying load HDP firmware from EMMC..
switch to partitions #0, OK
mmc1(part 0) is current device
Device: FSL_SDHC
Manufacturer ID: 13
OEM: 14e
Name: Q2J55
Bus Speed: 52000000
Mode : MMC High Speed (52MHz)
Rd Block Len: 512
```

```
MMC version 5.0
High Capacity: Yes
Capacity: 7.1 GiB
Bus Width: 4-bit
Erase Group Size: 512 KiB
HC WP Group Size: 8 MiB
User Capacity: 7.1 GiB WRREL
Boot Capacity: 2 MiB ENH
RPMB Capacity: 4 MiB ENH

MMC read: dev # 1, block # 18944, count 512 ... 512 blocks read: OK
Loading hdp firmware from 0x00000000a0000000 offset 0x0000000000002000
Loading hdp firmware Complete
```

3. Setting bootargs to specify the display resolution and CMA memory size
   - To support 480p resolution, add the following argument to bootargs (the minimum CMA size is 64M bytes):

     ```
     video=720x480-32@60 cma=256M
     ```

   - To support 720p resolution, add the following argument to bootargs:

     ```
     video=1280x720-32@60 cma=256M
     ```

   - To support 1080p resolution, add the following argument to bootargs:

     ```
     video=1920x1080-32@60 cma=256M
     ```

   - To support 4k resolution, add the following arguments to bootargs:

     ```
     video=3840x2160-32@60 cma=256M
     ```

4. Loading the below display related modules when system boot up is done

   ```
   # insmod drm_panel_orientation_quirks.ko
   # insmod drm.ko
   # insmod drm_kms_helper.ko
   # insmod imx_hdp_common.ko
   # insmod mali-dp.ko
   # insmod imx-hdptx.ko
   ```

   After executing the above steps, you can see “Please wait: booting” message on the DP.

Refer to the following boot up logs:

```
[   42.501819] [drm] found Arm Mali-DP500 version r1p2
[   42.506943] [drm] Resolution 3840x2160@60 is enabled
[   42.511945] [drm] Resolution 1920x1080@60 is enabled
[   42.516930] [drm] Resolution 1280x720@60 is enabled
[   42.521832] [drm] Resolution 720x480@60 is enabled
[   42.526645] i.mx8-hdp f1f0000.display: lane_mapping 0x4e
[   42.531979] i.mx8-hdp f1f0000.display: edp_link_rate 0x06
[   42.537398] i.mx8-hdp f1f0000.display: dp_num_lanes 0x04
[   42.542796] [drm] Started firmware!
[   42.546301] [drm] CDN_API_CheckAlive returned ret = 0
[   42.551373] [drm] Firmware version: 23029, Lib version: 20691
[   42.557162] [drm] CDN_API_MainControl_blocking (ret = 0 resp = 1)
[   42.563314] [drm] CDN_API_General_Test_Echo_Ext_blocking (ret = 0 echo_resp = echo test)
[   42.571444] [drm] CDN_API_General_Write_Register_blockin ... setting LANES_CONFIG
[   42.579017] [drm] pixel engine reset
```

```
[   42.582615] [drm] CDN_*_Write_Register_blocking ... setting LANES_CONFIG 4e
[   42.591387] [drm] AFE_init
[   42.594117] [drm] deasserted reset
[   42.597616] Wait for A2 ACK
[   42.622094] [drm] AFE_power exit
[   42.625342] [drm] CDN_API_DPTX_SetVideo_blocking (ret = 0)
[   42.631035] mali-dp f080000.display: bound f1f0000.display (ops imx_hdp_imx_ops [imx_hdptx])
[   42.639685] [drm] Supports vblank timestamp caching Rev 2 (21.10.2013).
[   42.646334] [drm] No driver support for vblank timestamp query.
[   42.652655] [drm] Initialized mali-dp 1.0.0 20160106 for f080000.display on minor 0
[   42.660407] i.mx8-hdp f1f0000.display: No EDID function, use default video mode
[   42.672016] [drm] pixel engine reset
[   42.672030] [drm] CDN_*_Write_Register_blocking ... setting LANES_CONFIG 4e
[   42.673818] [drm] AFE_init
[   42.673838] [drm] deasserted reset
[   42.673928] Wait for A2 ACK
[   42.695986] [drm] AFE_power exit
[   42.695994] [drm] CDN_API_DPTX_SetVideo_blocking (ret = 0)
[   42.696014] [drm] CDN_API_DPTX_SetHostCap_blocking (ret = 0)
[   42.698821] [drm] INFO: Full link training started
[   42.701245] [drm] INFO: Clock recovery phase finished
[   42.702064] [drm] INFO: Channel equalization phase finished
[   42.702066] [drm] (last part meaning training finished)
[   42.702097] [drm] INFO: Get Read Link Status (ret = 0) resp: rate: 20,
[   42.702099] [drm] lanes: 4, vswing 0..3: 2 2 2, preemp 0..3: 1 1 1
[   42.702284] [drm] CDN_API_DPTX_Set_VIC_blocking (ret = 0)
[   42.702290] [drm] CDN_API_DPTX_SetVideo_blocking (ret = 0)
[   42.703462] Console: switching to colour frame buffer device 240x67
[   42.812209] mali-dp f080000.display: fb0: mali-dpdrmfb frame buffer device
[   42.832364] [drm] HDMI/DP Cable Plug In
```

7.2.20 FlexTimer (FTM)

Description

The module can provide some functions, such as: PWM, clock source, wakeup source. But we just use the wakeup source to wake up system in deep sleep on Layerscape platform.

Kernel Configure Tree View Options

```
-> Device Drivers
    -> Real Time Clock
        -> <*> Freescale FlexTimer alarm timer
```

Compile-time Configuration Options

Config	Values	Defualt Value	Description
CONFIG_RTC_DRV_FSL_FTM_ALARM	y/m/n	y	Enable FlexTimer alarm timer

Source Files

The driver source is maintained in the Linux kernel source tree.

Source File	Description
drivers/rtc/rtc-fsl-ftm-alarm.c	Linux FlexTimer alarm timer driver

Device Tree Binding

Property	Type	Status	Description
compatible	String	Required	Should be 'fsl,<soc>-ftm-alarm'
reg	integer	Required	Should contain FlexTimer registers location and length
interrupts	integer	Required	Should contain FlexTimer interrupt
fsl,rcpm-wakeup	integer	Required	Should specify register’s value of rcpm
big-endian	String	Optional	It will be little-endian if the property is not specified.

Example:

```
aliases {
    rtc1 = &ftm_alarm0;
};
rcpm: rcpm@1ee208c {
compatible = "fsl,ls1046a-rcpm", "fsl,qoriq-rcpm-2.1+";
reg = <0x0 0x1ee208c 0x0 0x4>;
#fsl,rcpm-wakeup-cells = <1>;
};

ftm_alarm0: timer@29d0000 {
compatible = "fsl,ls1046a-ftm-alarm";
reg = <0x0 0x29d0000 0x0 0x10000>;
fsl,rcpm-wakeup = <&rcpm 0x20000>;
interrupts = <GIC_SPI 86 IRQ_TYPE_LEVEL_HIGH>;
big-endian;
};
```

Verification in Linux:

```
root@ls1046a:~# cat /sys/power/mem_sleep (check whether system support deep sleep mode)
s2idle [deep]
root@ls1046a:~# echo deep > /sys/power/mem_sleep (set deep sleep mode when suspend to
memery,it’s optional)

root@ls1046a:~# echo 0 > /sys/class/rtc/rtc1/wakealarm;echo +10>/sys/class/rtc/rtc1/wakealarm && echo
mem > /sys/power/state (wake up system in deep sleep mode afer 10 seconds)
[   32.844947] PM: suspend entry (deep)
[   32.849256] Filesystems sync: 0.000 seconds
[   32.853822] Freezing user space processes ... (elapsed 0.001 seconds) done.
[   32.861900] OOM killer disabled.
[   32.865128] Freezing remaining freezable tasks ... (elapsed 0.001 seconds) done.
[   32.873596] printk: Suspending console(s) (use no_console_suspend to debug)
[   32.898188] Disabling non-boot CPUs ...
[   32.898389] IRQ 51: no longer affine to CPU1
```

```
[   32.898392] IRQ 55: no longer affine to CPU1
[   32.898395] IRQ 59: no longer affine to CPU1
[   32.898418] CPU1: shutdown
[   32.916673] psci: Retrying again to check for CPU kill
[   32.916676] psci: CPU1 killed.
[   32.917127] IRQ 52: no longer affine to CPU2
[   32.917130] IRQ 56: no longer affine to CPU2
[   32.917133] IRQ 60: no longer affine to CPU2
[   32.917149] CPU2: shutdown
[   32.936666] psci: Retrying again to check for CPU kill
[   32.936669] psci: CPU2 killed.
[   32.937101] IRQ 53: no longer affine
to CPU3
[   32.937104] IRQ 57: no longer affine to CPU3
[   32.937107] IRQ 61: no longer affine to CPU3
[   32.937130] CPU3: shutdown
[   32.956665] psci: Retrying again to check for CPU kill
[   32.956668] psci: CPU3 killed.
[   32.957001] Enabling non-boot CPUs ...
[   32.957255] Detected PIPT I-cache on CPU1
[   32.957290] CPU1: Booted secondary processor 0x0000000001 [0x410fd082]
[   32.957546] CPU1 is up
[   32.957693] Detected PIPT I-cache on CPU2
[   32.957712] CPU2: Booted secondary processor 0x0000000002 [0x410fd082]
[   32.957896] CPU2 is up
[   32.958044] Detected PIPT I-cache on CPU3
[   32.958063] CPU3: Booted secondary processor 0x0000000003 [0x410fd082]
[   32.958265] CPU3 is up
[   34.282897] ata1: SATA link down (SStatus 0 SControl 300)
[   34.284480] OOM killer enabled.
[   34.347864] Restarting tasks ...
[   34.347959] usb 1-1: USB disconnect, device number 2
[   34.348301] done.
[   34.358237] PM: suspend exit
```

NOTE

1. Need used as rtc1, unless system will get wrong time, because FlexTimer module is not an RTC.
2. FlexTimer alarm timer driver depended by RCPM driver.

7.2.21 Inter-Integrated Circuit (I2C)

Description

This section provides details about I2C funtion.

Kernel configure tree view options

Kernel configure tree view options

```
-> Device Drivers
    -> I2C support
        -> I2C support (I2C [=y])
            -> I2C Hardware Bus support
                <*> IMX I2C interface
```

Compile-time configuration options

Option	Value	Default value	Description
CONFIG_I2C_IMX	y/m/n	y	Enable I2C module

Source files

The driver source is maintained in the Linux kernel source tree.

Source file	Description
drivers/i2c/busses/i2c-imx.c	Linux I2C driver

Device tree binding

For more information on Device tree binding see, `documentation/devicetree/bindings/i2c/i2c-imx.txt`.

Property	Type	Status	Description
compatible	string	Required	Should be 'fsl,vf610-i2c'
reg	integer	Required	Should contain I2C/HS-I2C registers location and length
interrupts	integer	Required	Should contain I2C/HS-I2C interrupt
clocks	integer	Required	Should contain the I2C/HS-I2C clock specifier

```
Example:

i2c1: i2c@2190000 {
            compatible = "fsl,vf610-i2c";
            #address-cells = <1>;
            #size-cells = <0>;
            reg = <0x0 0x2190000 0x0 0x10000>;
            interrupts = <GIC_SPI 57 IRQ_TYPE_LEVEL_HIGH>;
            clocks = <&clockgen 4 1>;
            status = "disabled";
};

&i2c1 {
        status = "okay";
};
```

Verification in U-Boot

```
U-Boot log:

=> help i2c
i2c - I2C sub-system

Usage:
i2c bus [muxtype:muxaddr:muxchannel] - show I2C bus info
i2c crc32 chip address[.0, .1, .2] count - compute CRC32 checksum
i2c dev [dev] - show or set current I2C bus
i2c loop chip address[.0, .1, .2] [# of objects] - looping read of device
```

```
i2c md chip address[.0, .1, .2] [# of objects] - read from I2C device
i2c mm chip address[.0, .1, .2] - write to I2C device (auto-incrementing)
i2c mw chip address[.0, .1, .2] value [count] - write to I2C device (fill)
i2c nm chip address[.0, .1, .2] - write to I2C device (constant address)
i2c probe [address] - test for and show device(s) on the I2C bus
i2c read chip address[.0, .1, .2] length memaddress - read to memory
i2c write memaddress chip address[.0, .1, .2] length [-s] - write memory
          to I2C; the -s option selects bulk write in a single transaction
i2c flags chip [flags] - set or get chip flags
i2c olen chip [offset_length] - set or get chip offset length
i2c reset - re-init the I2C Controller
i2c speed [speed] - show or set I2C bus speed
=> i2c bus
Bus 0:  i2c@2000000  (active 0)
   77: i2c-mux@77, offset len 1, flags 0
   66: generic_66, offset len 1, flags 0
   57: generic_57, offset len 1, flags 0
Bus 1:  i2c@2000000->i2c-mux@77->i2c@3
   51: rtc@51, offset len 1, flags 0
Bus 2:  i2c@2010000
Bus 3:  i2c@2020000
Bus 4:  i2c@2030000
Bus 5:  i2c@2040000
Bus 6:  i2c@2050000
Bus 7:  i2c@2060000
Bus 8:  i2c@2070000

=> i2c dev 0
Setting bus to 0
=> i2c probe
Valid chip addresses: 00 50 52 53 57 66 67 77 7C
=> i2c speed
Current bus speed=100000
=> i2c dev 1
Setting bus to 1
=> i2c probe
Valid chip addresses: 00 4C 51 66 67 77 7C
=> i2c md 0x51 0
0000: 07 fb 17 21 14 05 04 09 19 80 80 80 80 80 00 03    ...!............
```

Verification in Linux

```
root@ls1028a:~# i2c
i2cdetect  i2cdump    i2cget     i2cset
root@ls1028a:~# i2cdetect -l
i2c-3   i2c             i2c-0-mux (chan_id 2)                   I2C adapter
i2c-1   i2c             i2c-0-mux (chan_id 0)                   I2C adapter
i2c-8   i2c             i2c-0-mux (chan_id 7)                   I2C adapter
i2c-6   i2c             i2c-0-mux (chan_id 5)                   I2C adapter
i2c-4   i2c             i2c-0-mux (chan_id 3)                   I2C adapter
i2c-2   i2c             i2c-0-mux (chan_id 1)                   I2C adapter
i2c-0   i2c             2000000.i2c                             I2C adapter
i2c-7   i2c             i2c-0-mux (chan_id 6)                   I2C adapter
i2c-5   i2c             i2c-0-mux (chan_id 4)                   I2C adapter
root@ls1028a:~# i2cdetect -y 1
     0  1  2  3  4  5  6  7  8  9  a  b  c  d  e  f
00:          -- -- -- -- -- -- -- -- -- -- -- -- --
10: -- -- -- -- -- -- -- -- -- -- -- -- -- -- -- --
20: -- -- -- -- -- -- -- -- -- -- -- -- -- -- -- --
30: -- -- -- -- -- -- -- -- -- -- -- -- -- -- -- --
```

```
40: -- -- -- -- -- -- -- -- -- -- -- -- -- -- -- --
50: 50 -- 52 53 -- -- -- 57 -- -- -- -- -- -- -- --
60: -- -- -- -- -- -- 66 67 -- -- -- -- -- -- -- --
70: -- -- -- -- -- -- -- UU
root@ls1028a:~# i2cdump -y 1 0x66
No size specified (using byte-data access)
     0  1  2  3  4  5  6  7  8  9  a  b  c  d  e  f    0123456789abcdef
00: 47 01 06 c9 36 00 00 00 00 00 00 2f ff 00 00 00    G???6....../....
10: 10 00 00 00 00 00 00 00 00 00 00 00 00 01 00 7f    ?.............?.?
20: 00 00 00 00 cb ff ff ff 00 00 00 00 00 00 00 00    ....?...........
30: 02 00 00 00 00 00 00 00 00 00 00 00 00 00 00 00    ?...............
40: 30 00 33 00 00 00 00 00 00 00 00 00 00 00 00 00    0.3.............
50: 00 02 00 04 08 e0 e0 00 00 00 00 00 00 00 00 00    .?.????.........
60: ff 7f ff ff ff ff ff 00 00 00 00 ff 00 00 00 00    .?..............
70: 00 00 00 00 00 00 00 00 00 00 00 00 00 00 00 00    ................
80: 1c 00 00 00 00 00 00 00 00 00 00 00 00 00 00 00    ?...............
90: f7 ff ff 00 00 00 00 00 00 00 00 00 00 00 00 00    ?...............
a0: 00 00 00 00 00 00 00 00 00 00 00 00 00 00 00 00    ................
b0: 00 00 00 00 00 00 00 00 00 00 00 00 00 00 00 00    ................
c0: 00 00 00 00 00 00 00 00 00 00 00 00 00 00 00 00    ................
d0: 00 00 00 00 00 00 00 00 00 03 00 00 00 00 00 00    .........?......
e0: 00 00 00 00 00 00 00 00 00 00 00 00 00 00 00 00    ................
f0: 00 00 00 00 00 00 00 00 00 00 00 00 00 00 00 00    ................
root@ls1028a:~# i2cget -y 1  0x66 0x50
0x00
root@ls1028a:~# i2cset -y 1 0x66 0x50 0x4
root@ls1028a:~# i2cget -y 1  0x66 0x50
0x04
```

7.2.22 Watchdog

The Watchdog module is used to apply a reset to the system in an event of a software failure. It also provides a way of recovering from software crashes.

Kernel configure options

Kernel configure tree view options	Description

`Device Drivers --->`
`[*] Watchdog Timer Support --->`
`<*> IMX2+ Watchdog`
	IMX2 Watchdog Timer
	(worked on LS1021A, LS1012A, LS1043A, and LS1046A)

`Device Drivers --->`
`[*] Watchdog Timer Support --->`
`<*> Arm SP805 Watchdog`
	SP805 Watchdog Timer
	(worked on LS1088A, LS208xA, and LS1028A)

`Device Drivers --->`
`[*] Watchdog Timer Support --->`
`<*> ARM SBSA Generic Watchdog`
	SBSA Generic Watchdog Timer
	(worked on LX2160A)

Compile-time configuration options

Option	Values	Default value	Description
CONFIG_IMX2_WDT	y/m/n	y	IMX2 Watchdog Timer
CONFIG_ARM_SP805_WATCHDOG	y/m/n	y	SP805 Watchdog Timer
CONFIG_ARM_SBSA_WATCHDOG	y/m/n	y	SBSA Generic Watchdog Timer

Device tree

- IMX2 Watchdog Timer:

```
    wdog0: wdog@2ad0000 {
        compatible = "fsl,ls1043a-wdt", "fsl,imx21-wdt";
        reg = <0x0 0x2ad0000 0x0 0x10000>;
        interrupts = <0 83 0x4>;
        clocks = <&clockgen 4 0>;
        clock-names = "wdog";
        big-endian;
    };
```

- SP805 Watchdog Timer:

```
    cluster1_core0_watchdog: wdt@c000000 {
        compatible = "arm,sp805", "arm,primecell";
        reg = <0x0 0xc000000 0x0 0x1000>;
        clocks = <&clockgen 4 15>, <&clockgen 4 15>;
        clock-names = "apb_pclk", "wdog_clk";
    };
```

- SBSA Generic Watchdog Timer:

```
watchdog@23a0000 {
    compatible = "arm,sbsa-gwdt";
    reg = <0x0 0x23a0000 0 0x1000>,
    <0x0 0x2390000 0 0x1000>;
    interrupts = <GIC_SPI 59 IRQ_TYPE_LEVEL_HIGH>;
    timeout-sec = <30>;
    };
```

Source files

The driver source is maintained in the Linux kernel source tree.

Source file	Description
drivers/watchdog/imx2_wdt.c	IMX2 Watchdog Timer
drivers/watchdog/sp805_wdt.c	SP805 Watchdog Timer
drivers/watchdog/sbsa_gwdt.c	SBSA Generic Watchdog Timer

Verification in Linux

- Boot-up Linux with Ubuntu.
- In */etc/watchdog.conf*:
  - Configure watchdog device to be used. Refer the third point in the **Note** below to identify the correct device.

    Example: `watchdog-device = /dev/watchdog0`
  - assign timeout to `watchdog-timeout` in seconds. Default value is 60 s if `watchdog-timeout` is not defined in Ubuntu.

    Example: `watchdog-timeout = 30`
- Then kill watchdog daemon and the system will reset after timeout.

```
root@localhost:~# pkill -9 watchdog
root@localhost:~# pkill -9 wd_keepalive
```

NOTE

- For **SBSA watchdog**, the first interrupt is not enabled by default. Setting `sbsa-gwdt.action` to 1 in U-Boot bootargs could enable it.
- **SBSA watchdog** on LX2160A **will not reset** the kernel but get kernel **panic**.
- There may be more than one watchdog device, so need to check which device file (/dev/watchdogx, x can be 0, 1, 2 ...) can be used. PCF2127/9 which actually is RTC device may be registered as watchdog due to Linux new feature. Use the following commands to check the relationship between watchdog hardware device and device file.
  - Use the command: `cat /sys/class/watchdog/watchdog0/device/uevent` For example:

```
root@rdb:/# cat /sys/class/watchdog/watchdog0/device/uevent
DRIVER=rtc-pcf2127-i2c
OF_NAME=rtc
OF_FULLNAME=/soc/i2c@2040000/rtc@51
OF_COMPATIBLE_0=nxp,pcf2129
OF_COMPATIBLE_N=1
MODALIAS=of:NrtcT(null)Cnxp,pcf2129
root@rdb:/# cat /sys/class/watchdog/watchdog1/device/uevent
DRIVER=sbsa-gwdt
OF_NAME=watchdog
OF_FULLNAME=/soc/watchdog@23a0000
OF_COMPATIBLE_0=arm,sbsa-gwdt
OF_COMPATIBLE_N=1
MODALIAS=of:NwatchdogT(null)Carm,sbsa-gwdt
```

  - or use the command: `ls -l sys/class/watchdog/watchdog0/device/driver` For example:

```
root@rdb:/# ls -l sys/class/watchdog/watchdog0/device/driver
lrwxrwxrwx 1 root root 0 Feb 28 18:05 sys/class/watchdog/watchdog0/
device/driver -> ../../../../../../bus/i2c/drivers/rtc-pcf2127-i2c
root@rdb:/# ls -l sys/class/watchdog/watchdog1/device/driver
lrwxrwxrwx 1 root root 0 Feb 28 18:05 sys/class/watchdog/watchdog1/
device/driver -> ../../../../bus/platform/drivers/sbsa-gwdt
```

7.2.23 QUICC Engine HDLC/TDM User Manual

Linux SDK for QorIQ Processors

Description

HDLC, standing for High-level Data Link Control, is one of the most common protocols of the Layer 2 (Data Link Layer) of the seven-layer OSI model. HDLC uses a zero insertion/deletion process (commonly known as bit stuffing) to ensure that the bit pattern of the delimiter flag does not occur in the fields between flags. The HDLC frame is synchronous and therefore relies on the physical layer for a method of clocking and of synchronizing the transmitter/receiver.

The HDLC/TDM driver is implemented by UCC and TSA(HDLC is upper layer protocol of TDM). It enables UCC1/3 to work in hdlc protocol, connected with X-TDM-DS26522 card to support T1/E1 function. It can work in normal or loopback mode both for tdm controller and phy. connect X-TDM-DS26522 card to TDM Riser slot, it can transmit data and receive data.

U-Boot Configuration

Compile time options

Below are major u-boot configuration options related to this feature defined in platform specific config files under include/configs/ directory.

Option Identifier	Description

Choosing predefined u-boot modes:

make ls1043ardb_deconfig

before doing the actually build

Runtime options

Env Variable	Env Description	Sub option	Option Description
hwconfig	Hardware configuration for u-boot	qe-hdlc	Assgin pins for HDLC; QUICC Engine TDM enabled in DTB
bootargs	Kernel command line argument passed to kernel		

Kernel Configure Options

Tree View

LS1043ARDB and X-TDM-DS26522 card:

Kernel Configure Tree View Options	Description

`Device Drivers  --->`
`  SOC (System On Chip) specific Drivers  --->`
`  [*] Freescale QUICC Engine (QE) Support`
`  [*] Network device support  --->`
`  [*]  Wan interfaces support  --->`
`  <*>  Generic HDLC layer`
	Enable the QE TDM driver and X-TDM-DS26522 card driver.

Kernel Configure Tree View Options	Description
<*> Raw HDLC support <*> Freescale QUICC Engine HDLC support <*> SLIC MAXIM DS26522 CARD SUPPORT	

Identifier

Below are the configure identifiers which are used in kernel source code and default configuration files.

Option	Values	Default Value	Description
CONFIG_QUICC_ENGINE	y/n	n	QUICC Engine enabled
CONFIG_FSL_UCC_TDM	y/n	n	QUICC Engine TDM lib
CONFIG_SLIC_MAXIM	y/m/n	n	Enable x-tdm-ds26522 card support
FSL_UCC_HDLC	y/m/n	n	QUICC Engine driver driver

Device Tree Binding

Below is the definition of the device tree node required by this feature

Property	Type	Status	Description
qe	qe	enable	QUICC Engine node
ucc	hdlc	enable	QE UCC HDLC node.
si	si	si	QE TSA node

Below is an example device tree node required by this feature. Note that it may have differences among platforms.

LS1040ARDB and X-TDM-DS26522 card:

```
ucc_hdlc: ucc@2000 {
                compatible = "fsl,ucc-hdlc";
                rx-clock-name = "clk8";
                tx-clock-name = "clk9";
                fsl,rx-sync-clock = "rsync_pin";
                fsl,tx-sync-clock = "tsync_pin";
                fsl,tx-timeslot-mask = <0xfffffffe>;
                fsl,rx-timeslot-mask = <0xfffffffe>;
                fsl,tdm-framer-type = "e1";
                fsl,tdm-id = <0>;
                fsl,siram-entry-id = <0>;
                fsl,tdm-interface;
        };
        slic@3 {
                compatible = "maxim,ds26522";
                reg = <3>;
                spi-max-frequency = <2000000>;
                fsl,spi-cs-sck-delay = <100>;
```

```
                fsl,spi-sck-cs-delay = <50>;
        };
```

Source Files

The following source file are related the this feature in Linux.

T1040RDB and X-TDM-DS26522 card:

Source File	Description
drivers/soc/fsl/qe/qe_tdm.c	QE UCC TDM lib
include/soc/fsl/qe/qe_tdm.h	QE UCC TDM lib head file.
drivers/net/tdm/slic_ds26522.c	X-TDM-DS26522 card driver.
drivers/net/wan/fsl_ucc_hdlc.*	QE HDLC driver
arch/arm64/boot/dts/freescale/fsl-ls1043a.dtsi	Define the device tree nodes for LS1043ARDB QE
arch/arm64/boot/dts/freescale/fsl-ls1043a-rdb.dts	Define the device tree nodes for LS1043ARDB ds26522

User Space Application

The following applications will be used during functional or performance testing. Please refer to the SDK UM document for the detailed build procedure.

Command Name	Description	Package Name

Verification in U-boot

N/A

Verification in Linux

1. After u-boot startup,set "qe-hdlc" parameter in hwconfig.
2. After bootup kernel, Kernel boot log for hdlc:

   ```
   hdlc: HDLC support module revision 1.22
   ```

3. QE HDLC T1/E1 test
   a. Make X-TDM-DS26522 card connected to T1040RDB board Slot.
   b. To test tdm external ports, please plugin tdm t1/e1 loopback cable in the related port.

      The following is HDLC port mapping with X-TDM-DS26522 card:

      ```
      HDLC Port                 X-TDM-DS26522 Port
      Port A                         CH1;
      Port B                         CH2;
      ```

   c. HDLC test using E1.

Use the default dts to test E1 function. Test module can receive ucc_num as parameter. This number should be 1/3 related to the tdm port.

```
ls1043ardb login: root
root@ls1043ardb:~# ./sethdlc hdlc0 hdlc;
root@ls1043ardb:~# ifconfig hdlc0 192.168.0.1 up
[   41.072590] hdlc0: Carrier detected
root@ls1043ardb:~# route add -net 192.168.0.0 netmask 255.255.255.0 gw 192.168.0.1 hdlc0;
root@ls1043ardb:~# ping 192.168.0.2;
PING 192.168.0.2[   52.208784] Tx data skb->len:86  (192.168.0.2) 56(84) bytes of
d[   52.213119]
[   52.213119] Transmitted data:
ata.
[   52.220324] ff
[   52.222491] 44
[   52.224154] 45
[   52.225810] 00
[   52.227472] 00
[   52.229125] 54
[   52.230778] c3
[   52.232440] 89
[   52.234094] 40
[   52.235755] 00
[   52.237408] 40
[   52.239069] 01
[   52.240722] f5
[   52.242375] cb
[   52.244038] c0
[   52.245691] a8
[   52.247844] irq ucce:20000
[   52.250543] TxBD: 1c00
[   52.252900] Received data length:88[   52.256206] while entry times:0
[   52.259338]
[   52.259338] Received data:
[   52.263512] ff
[   52.265165] 44
[   52.266818] 45
[   52.268474] 00
[   52.270127] 00
[   52.271782] 54
[   52.273435] c3
[   52.275091] 89
[   52.276744] 40
[   52.278397] 00
[   52.280052] 40
[   52.281705] 01
[   52.283361] f5
[   52.285014] cb
[   52.286667] c0
[   52.288322] a8
[   52.289980] skb->protocol:8
[   52.292784] irq ucce:80000
[   53.262909] Tx data skb->len:86 [   53.265951]
```

7.3 kdump/kexec User Manual

This topic explains “kexec/kdump” feature on NXP Layerscape ARMv8 platforms.

NOTE

For more information about the kdump feature of Linux kernel, see following documents at kernel.org:

- Documentation/kdump/kdump.txt
- Documentation/kdump/gdbmacros.txt

Features and configurations supported

Kexec feature:

- The first kernel should be able to boot up another kernel using `kexec-l` and `kexec -e` commands.

Kdump feature:

- The first kernel should be able to support loading and booting of crash dump kernel in case of kernel panic.
- The vmcore of the first kernel should be available in `/proc/vmcore` of the dump capture kernel.
- There should be mechanism to copy the vmcore to a secondary storage, such as SD card partition or USB disk partition.
- The vmcore should be interpretable using gdb on an x86 host.
- The vmcore should be interpretable using crash utility on an x86 host.

Only LE mode of the kernel is supported.

NOTE

- The first kernel should be booted using `nokaslr` in the kernel bootargs.
- All the testing has been done using U-Boot as the bootloader in non EFI mode.
- Recommended rootfs for second/crashdump kernel:
  - Recommendation is to use rootfs on SD card partition, same as primary kernel.
  - Using ramdisk can lead to some size constraints. The crash kernel size is ok to be kept as 512M. And rootfs for the second kernel should be minimum rootfs. Bigger root filesystems may cause memory issues.
- From the dump-capture kernel perspective, it is preferable to have almost similar configurations in both the kernels, unless there are any known limitations. Please note that for LS1043A platform, DPAA1 should be compiled out in dump-capture kernel config otherwise the second kernel will crash.
- Dump capture kernel may be booted using the device tree of the system kernel, so no need to explicitly provide dtb image for the dump capture kernel.

  If separate dtb is to be provided it can be provided using `--dtb`

Test Status

Table 61. Software details

Kernel version	5.4, 4.19
U-Boot version	Same as in the LSDK
kexec-tools	kexec-tools 2.0.17.git, kexec-tools-2.0.20
Gdb	Gdb 8.3
Crash	crash 7.1.9, crash 7.2.7

Test Method

Linux Compile-time Configuration options:

- System Kernel Configuration Options
  1. Enable "kexec system call" in "Processor type and features."

     ```
     CONFIG_KEXEC=y
     ```

  2. Enable "sysfs file system support" in "Filesystem" -> "Pseudo filesystems." This is usually enabled by default.

     ```
     CONFIG_SYSFS=y
     ```

     Note that "sysfs file system support" might not appear in the "Pseudo filesystems" menu if "Configure standard kernel features (for small systems)" is not enabled in "General Setup." In this case, check the .config file itself to ensure that sysfs is turned on, as follows:

     ```
     grep 'CONFIG_SYSFS' .config
     ```

  3. Enable "Compile the kernel with debug info" in "Kernel hacking."

     ```
     CONFIG_DEBUG_INFO=Y
     ```

     This causes the kernel to be built with debug symbols. The dump analysis tools require a vmlinux with debug symbols in order to read and analyze a dump file.

- System Configuration for dump-capture kernel:
  1. Enable "kernel crash dumps" support under "Processor type and features":

     ```
     CONFIG_CRASH_DUMP=y
     ```

  2. Enable "/proc/vmcore support" under "Filesystems" -> "Pseudo filesystems".

     ```
     CONFIG_KCORE
     CONFIG_PROC_VMCORE=y
     CONFIG_PROC_VMCORE is set by default when CONFIG_CRASH_DUMP is selected.)
     ```

     In case of LS1043A , the second kernel should be built with DPAA driver compiled out.

Test Procedure: (example logs/will be updated by latest test report)

1. Boot up the “system kernel/first kernel”
2. Set system kernel bootargs to reserve memory for “dump-capture/second kernel”

   ```
   => print dl_debug
   dl_debug=setenv bootargs  “root=/dev/mmcblk0p3 rw rootdelay=10 console=ttyS0,115200
   earlycon=uart8250,0x21c0500 ramdisk_size=0x10000000 crashkernel=512M nokaslr loglevel=8;tftpboot
   81000000 ls1043-debug.itb;bootm 81000000”
   ```

3. Boot second kernel using kexec (-l/-e)

   ```
   root@ls1043ardb:~# cp /run/media/sda1/kexec /usr/sbin/
   root@ls1043ardb:~# chmod +x /usr/sbin/kexec
   root@ls1043ardb:~# ./kexec -l ./Image --append=" console=ttyS0,115200 root=/dev/mmcblk0p3
   earlycon=uart8250,0x21c0500,115200 "
   root@ls1043ardb:~#./kexec -e
   ```

NOTE

It is recommended to enable early con for second kernel to debug early crashes/failures effectively

4. “Dump-capture” kernel loaded by kernel panic, (here only one core is enabled in the dump capture kernel , see the maxcpus argument for dump-capture kernel)

```
root@ls1043ardb:~# cp /run/media/sda1/kexec /usr/sbin/
root@ls1043ardb:~# chmod +x /usr/sbin/kexec
root@ls1043ardb:~# kexec -p Image-remove-dpaa  --append="root=/dev/mmcblk0p3 rw rootdelay=10
console=ttyS0,115200 earlycon=uart8250,0x21c0500,115200 maxcpus=1 reset_devices"
```

NOTE

It is recommended to enable early con for second kernel to debug early crashes/failures effectively.

```
Trigger a crash.

root@ls1043ardb:~# echo c > /proc/sysrq-trigger
[  210.085271] sysrq: SysRq : Trigger a crash
[  210.089379] Unable to handle kernel NULL pointer dereference at virtual address 00000000
[  210.097469] pgd = ffff80000190e000
[  210.100862] [00000000] *pgd=00000000d2bc9003, *pud=0000000081c08003, *pmd=0000000000000000
[  210.109139] Internal error: Oops: 96000046 [#1] PREEMPT SMP
[  210.114700] Modules linked in:
[  210.117748] CPU: 2 PID: 1809 Comm: sh Not tainted 4.4.39-00515-gf368a91-dirty #12
[  210.125218] Hardware name: LS1043A RDB Board (DT)
[  210.129910] task: ffff800054f48680 ti: ffff8000019a8000 task.ti: ffff8000019a8000
[  210.137386] PC is at sysrq_handle_crash+0x14/0x1c
[  210.142080] LR is at __handle_sysrq+0x124/0x194
[  210.146599] pc : [<ffff8000003bca48>] lr : [<ffff8000003bd418>] pstate: 60000145
[  210.153981] sp : ffff8000019abd40
Snip
 [  210.446905] [<ffff8000001a6610>] vfs_write+0x90/0x194
[  210.451946] [<ffff8000001a7104>] SyS_write+0x44/0xa0
[  210.456900] [<ffff800000085e30>] el0_svc_naked+0x24/0x28
[  210.462201] Code: 52800020 b903dc20 d5033e9f d2800001 (39000020)
[  210.468328] Starting crashdump kernel...
[  210.476756] Bye!
[    0.000000] Booting Linux on physical CPU 0x0000000003 [0x410fd034]
[    0.000000] Linux version 5.4.3-03944-ge0081bf-dirty (nxf56392@lsv03080.swis.in-
blr01.nxp.com) (gcc version 7.3.0 (GCC)) #5 SMP PREEMPT Mon Dec 30 11:17:45 IST 2019
[    0.000000] Machine model: LS1043A RDB Board
[    0.000000] earlycon: uart8250 at MMIO 0x00000000021c0500 (options '')
[    0.000000] printk: bootconsole [uart8250] enabled
root@ls1043ardb:~# ls /proc/vmcore -al
-r-------- 1 root root 1620045824 Sep 28 12:42 /proc/vmcore
root@ls1043ardb:~# cp /proc/vmcore /run/media/sda1/kdump_vmcore
root@ls1043ardb:~# umount /run/media/sda1
root@ls1043ardb:~#
```

Boot the first kernel again and the vmcore can be transferred to the host machine(X86) for crash and gdb examination.

5. Interpret the crash logs using crash utility.

```
nxa19049@lsv03080:~/data/ups/crash$ ./crash  ../../vmlinux ../../vmcore.9jan

crash 7.2.7++
Copyright (C) 2002-2019  Red Hat, Inc.
Copyright (C) 2004, 2005, 2006, 2010  IBM Corporation
Copyright (C) 1999-2006  Hewlett-Packard Co
Copyright (C) 2005, 2006, 2011, 2012  Fujitsu Limited
Copyright (C) 2006, 2007  VA Linux Systems Japan K.K.
Copyright (C) 2005, 2011  NEC Corporation
```

```
Copyright (C) 1999, 2002, 2007  Silicon Graphics, Inc.
Copyright (C) 1999, 2000, 2001, 2002  Mission Critical Linux, Inc.
This program is free software, covered by the GNU General Public License,
and you are welcome to change it and/or distribute copies of it under
certain conditions.  Enter "help copying" to see the conditions.
This program has absolutely no warranty.  Enter "help warranty" for details.

GNU gdb (GDB) 7.6
Copyright (C) 2013 Free Software Foundation, Inc.
License GPLv3+: GNU GPL version 3 or later <http://gnu.org/licenses/gpl.html>
This is free software: you are free to change and redistribute it.
There is NO WARRANTY, to the extent permitted by law.  Type "show copying"
and "show warranty" for details.
This GDB was configured as "--host=x86_64-unknown-linux-gnu --target=aarch64-elf-linux"...

      KERNEL: ../../vmlinux                    unum=0crash: test msg 2 p=7b5bf050
cpunum=1crash: test msg 2 p=7b5d7050 cpunum=2crash: test msg 2 p=7b5ef050 cpunum=3
    DUMPFILE: ../../vmcore.9jan
        CPUS: 4
        DATE: Sun Jan 28 21:30:08 2018
      UPTIME: 00:02:30
LOAD AVERAGE: 2.08, 1.24, 0.49
       TASKS: 188
    NODENAME: localhost
     RELEASE: 5.4.3-03991-g6bf2ce3-dirty
     VERSION: #10 SMP PREEMPT Thu Jan 9 14:31:21 IST 2020
     MACHINE: aarch64  (unknown Mhz)
      MEMORY: 1.9 GB
       PANIC: "Kernel panic - not syncing: sysrq triggered crash"
         PID: 1138
     COMMAND: "bash"
        TASK: ffff000030417000  [THREAD_INFO: ffff000030417000]
         CPU: 3
       STATE: TASK_RUNNING (PANIC)

crash> help

*              extend         log            rd             task
alias          files          mach           repeat         timer
ascii          foreach        mod            runq           tree
bpf            fuser          mount          search         union
bt             gdb            net            set            vm
btop           help           p              sig            vtop
dev            ipcs           ps             struct         waitq
dis            irq            pte            swap           whatis
eval           kmem           ptob           sym            wr
exit           list           ptov           sys            q

crash version: 7.2.7++   gdb version: 7.6
For help on any command above, enter "help <command>".
For help on input options, enter "help input".
For help on output options, enter "help output".

crash> dev
CHRDEV    NAME                 CDEV        OPERATIONS
 510      rpmb                 (none)
   1      mem             ffff00004148bf00  memory_fops
 511      vfio                 (none)
   2      pty             ffff0000410fcf00  tty_fops
   3      ttyp            ffff00004112e080  tty_fops
```

```
  4      /dev/vc/0      ffff800011f5a878  console_fops
  4      tty            ffff00004156aa80  tty_fops
  4      ttyS           ffff000041138d00  tty_fops
  5      /dev/tty       ffff800011f59388  tty_fops
  5      /dev/console   ffff800011f593f0  console_fops
  5      /dev/ptmx      ffff800011f59568  ptmx_fops
  7      vcs            ffff000041443a80  vcs_fops
 10      misc           ffff000041d72280  misc_fops
 13      input               (none)
 29      fb             ffff0000414a3580  fb_fops
 81      video4linux         (none)
 89      i2c            ffff000040c5b320  i2cdev_fops
 90      mtd            ffff0000417b0780  mtd_fops
116      alsa           ffff000041d72f80  snd_fops
128      ptm            ffff000041138300  tty_fops
136      pts            ffff000041138480  tty_fops
153      spi            ffff0000417bda00  spidev_fops
207      ttymxc              (none)
212      DVB            ffff800011f6b198  dvb_device_fops
216      rfcomm              (none)
226      drm            ffff000041147d80  drm_stub_fops
234      uio            ffff000041f00980  uio_fops
235      nvme                (none)
236      ttyLF               (none)
237      ttyLP               (none)
238      ttyTHS              (none)
239      ttyHS               (none)
240      ttyMSM              (none)
241      ttyMSM              (none)
242      ttyAML              (none)
243      bsg            ffff800011f4ad20  bsg_fops
244      watchdog       ffff000040c4d608  watchdog_fops
245      tee                 (none)
246      iio                 (none)
247      ptp            ffff000041eca050  posix_clock_file_operations
248      pps                 (none)
249      cec                 (none)
250      media               (none)
251      rtc            ffff000040c43318  rtc_dev_fops
252      tpm                 (none)
253      ttyMV               (none)
254      gpiochip       ffff000041f9e2e8  gpio_fileops

BLKDEV   NAME               GENDISK      OPERATIONS
259      blkext              (none)
  7      loop           ffff0000412b4000  lo_fops
  8      sd                  (none)
 31      mtdblock       ffff0000412b7800  mtd_block_ops
 65      sd                  (none)
 66      sd                  (none)
 67      sd                  (none)
 68      sd                  (none)
 69      sd                  (none)
 70      sd                  (none)
 71      sd                  (none)
128      sd                  (none)
129      sd                  (none)
130      sd                  (none)
131      sd                  (none)
132      sd                  (none)
```

```
 133      sd                  (none)
 134      sd                  (none)
 135      sd                  (none)
 179      mmc            ffff000041522000  mmc_bdops
 254      virtblk             (none)
crash> help

*              extend         log            rd             task
alias          files          mach           repeat         timer
ascii          foreach        mod            runq           tree
bpf            fuser          mount          search         union
bt             gdb            net            set            vm
btop           help           p              sig            vtop
dev            ipcs           ps             struct         waitq
dis            irq            pte            swap           whatis
eval           kmem           ptob           sym            wr
exit           list           ptov           sys            q

crash version: 7.2.7++   gdb version: 7.6
For help on any command above, enter "help <command>".
For help on input options, enter "help input".
For help on output options, enter "help output".

crash> list
list: starting address required
Usage:
  list [[-o] offset][-e end][-[s|S] struct[.member[,member] [-l offset]] -[x|d]]
       [-r|-B] [-h|-H] start
Enter "help list" for details.
crash> mach
       MACHINE TYPE: aarch64
        MEMORY SIZE: 1.9 GB
              CPUS: 4
                HZ: 250
         PAGE SIZE: 4096
KERNEL VIRTUAL BASE: ffff000000000000
KERNEL MODULES BASE: ffff800008000000
KERNEL VMALLOC BASE: ffff800010000000
KERNEL VMEMMAP BASE: fffffe0000000000
  KERNEL STACK SIZE: 16384
     IRQ STACK SIZE: 16384
         IRQ STACKS:
              CPU 0: ffff800010000000
              CPU 1: ffff800010008000
              CPU 2: ffff800010010000
              CPU 3: ffff800010018000
crash> ps
   PID    PPID  CPU       TASK        ST  %MEM     VSZ    RSS  COMM
>     0      0   0  ffff800011cc1380  RU   0.0       0      0  [swapper/0]
>     0      0   1  ffff000041cb1c00  RU   0.0       0      0  [swapper/1]
>     0      0   2  ffff000041cb2a00  RU   0.0       0      0  [swapper/2]
      0      0   3  ffff000041cb3800  RU   0.0       0      0  [swapper/3]
<snip>
crash>
crash> sig
PID: 1138   TASK: ffff000030417000  CPU: 3   COMMAND: "bash"
SIGNAL_STRUCT: ffff00003042a200  NR_THREADS: 1
 SIG    SIGACTION        HANDLER       MASK       FLAGS
 [1] ffff0000304239e0 aaaad53e3f60 0000000043807efb 0
 [2] ffff000030423a00 aaaad53e3c50 0000000000000000 0
```

```
 [3] ffff000030423a20    SIG_IGN 0000000000000000 0
 [4] ffff000030423a40 aaaad53e3f60 0000000043807efb 0
 [5] ffff000030423a60 aaaad53e3f60 0000000043807efb 0
 [6] ffff000030423a80 aaaad53e3f60 0000000043807efb 0
 [7] ffff000030423aa0 aaaad53e3f60 0000000043807efb 0
 [8] ffff000030423ac0 aaaad53e3f60 0000000043807efb 0
 [9] ffff000030423ae0    SIG_DFL 0000000000000000 0
[10] ffff000030423b00 aaaad53e3f60 0000000043807efb 0
[11] ffff000030423b20 aaaad53e3f60 0000000043807efb 0
[12] ffff000030423b40 aaaad53e3f60 0000000043807efb 0
[13] ffff000030423b60 aaaad53e3f60 0000000043807efb 0
[14] ffff000030423b80 aaaad53e3f60 0000000043807efb 0
[15] ffff000030423ba0 aaaad53e36f0 0000000000000000 10000000 (SA_RESTART)
[16] ffff000030423bc0    SIG_DFL 0000000000000000 0
[17] ffff000030423be0 aaaad53cafa0 0000000000000000 10000000 (SA_RESTART)
[18] ffff000030423c00    SIG_DFL 0000000000000000 0
[19] ffff000030423c20    SIG_DFL 0000000000000000 0
[20] ffff000030423c40    SIG_IGN 0000000000000000 0
[21] ffff000030423c60    SIG_IGN 0000000000000000 0
[22] ffff000030423c80    SIG_IGN 0000000000000000 0
[23] ffff000030423ca0    SIG_DFL 0000000000000000 0
[24] ffff000030423cc0 aaaad53e3f60 0000000043807efb 0
[25] ffff000030423ce0 aaaad53e3f60 0000000043807efb 0
[26] ffff000030423d00 aaaad53e3f60 0000000043807efb 0
[27] ffff000030423d20    SIG_DFL 0000000000000000 0
[28] ffff000030423d40 aaaad53e36e0 0000000000000000 0
[29] ffff000030423d60    SIG_DFL 0000000000000000 0
[30] ffff000030423d80    SIG_DFL 0000000000000000 0
[31] ffff000030423da0 aaaad53e3f60 0000000043807efb 0
[32] ffff000030423dc0    SIG_DFL 0000000000000000 0
[33] ffff000030423de0    SIG_DFL 0000000000000000 0
[34] ffff000030423e00    SIG_DFL 0000000000000000 0
[35] ffff000030423e20    SIG_DFL 0000000000000000 0
[36] ffff000030423e40    SIG_DFL 0000000000000000 0
[37] ffff000030423e60    SIG_DFL 0000000000000000 0
[38] ffff000030423e80    SIG_DFL 0000000000000000 0
[39] ffff000030423ea0    SIG_DFL 0000000000000000 0
[40] ffff000030423ec0    SIG_DFL 0000000000000000 0
[41] ffff000030423ee0    SIG_DFL 0000000000000000 0
[42] ffff000030423f00    SIG_DFL 0000000000000000 0
[43] ffff000030423f20    SIG_DFL 0000000000000000 0
[44] ffff000030423f40    SIG_DFL 0000000000000000 0
[45] ffff000030423f60    SIG_DFL 0000000000000000 0
[46] ffff000030423f80    SIG_DFL 0000000000000000 0
[47] ffff000030423fa0    SIG_DFL 0000000000000000 0
[48] ffff000030423fc0    SIG_DFL 0000000000000000 0
[49] ffff000030423fe0    SIG_DFL 0000000000000000 0
[50] ffff000030424000    SIG_DFL 0000000000000000 0
[51] ffff000030424020    SIG_DFL 0000000000000000 0
[52] ffff000030424040    SIG_DFL 0000000000000000 0
[53] ffff000030424060    SIG_DFL 0000000000000000 0
[54] ffff000030424080    SIG_DFL 0000000000000000 0
[55] ffff0000304240a0    SIG_DFL 0000000000000000 0
[56] ffff0000304240c0    SIG_DFL 0000000000000000 0
[57] ffff0000304240e0    SIG_DFL 0000000000000000 0
[58] ffff000030424100    SIG_DFL 0000000000000000 0
[59] ffff000030424120    SIG_DFL 0000000000000000 0
[60] ffff000030424140    SIG_DFL 0000000000000000 0
[61] ffff000030424160    SIG_DFL 0000000000000000 0
[62] ffff000030424180    SIG_DFL 0000000000000000 0
```

```
[63] ffff0000304241a0    SIG_DFL 0000000000000000 0
[64] ffff0000304241c0    SIG_DFL 0000000000000000 0
SIGPENDING: no
   BLOCKED: 0000000000000000
PRIVATE_PENDING
    SIGNAL: 0000000000000000
  SIGQUEUE: (empty)
SHARED_PENDING
    SIGNAL: 0000000000000000
  SIGQUEUE: (empty)

crash>
crash>
crash>
crash>
crash> exit
nxa19049@lsv03080:~/data/ups/crash$
```

6. Interpret the crash logs using gdb.

```
nxa19049@lsv03080:~/data/ups$ aarch64-fsl-linux-gdb ../vmlinux ../vmcore.9jan
GNU gdb (GDB) 8.3.1
Copyright (C) 2019 Free Software Foundation, Inc.
License GPLv3+: GNU GPL version 3 or later <http://gnu.org/licenses/gpl.html>
This is free software: you are free to change and redistribute it.
There is NO WARRANTY, to the extent permitted by law.
Type "show copying" and "show warranty" for details.
This GDB was configured as "--host=x86_64-fslsdk-linux --target=aarch64-fsl-linux".
Type "show configuration" for configuration details.
For bug reporting instructions, please see:
<http://www.gnu.org/software/gdb/bugs/>.
Find the GDB manual and other documentation resources online at:
    <http://www.gnu.org/software/gdb/documentation/>.

For help, type "help".
Type "apropos word" to search for commands related to "word"...
Reading symbols from ../vmlinux...
[New process 1]
[New process 1]
[New process 1]
[New LWP 1138]
#0  0xffff800010b2f274 in arch_local_irq_enable ()
    at ./arch/arm64/include/asm/irqflags.h:36
36              asm volatile(ALTERNATIVE(
[Current thread is 3 (process 1)]
(gdb) bt
#0  0xffff800010b2f274 in arch_local_irq_enable ()
    at ./arch/arm64/include/asm/irqflags.h:36
#1  cpuidle_enter_state (dev=0xffff00007b5b1c00, drv=0xffff000040c8f400,
    index=<optimized out>) at drivers/cpuidle/cpuidle.c:247
#2  0xffff800010b2f5a4 in cpuidle_enter (drv=0xffff000040c8f400,
    dev=0xffff00007b5b1c00, index=2069568512) at drivers/cpuidle/cpuidle.c:344
#3  0xffff800010114c50 in call_cpuidle (drv=<optimized out>,
    dev=<optimized out>, next_state=<optimized out>) at kernel/sched/idle.c:117
Backtrace stopped: previous frame identical to this frame (corrupt stack?)
(gdb) list
31                      u32 pmr = read_sysreg_s(SYS_ICC_PMR_EL1);
32
33                      WARN_ON_ONCE(pmr != GIC_PRIO_IRQON && pmr != GIC_PRIO_IRQOFF);
34              }
```

```
35
36              asm volatile(ALTERNATIVE(
37                      "msr    daifclr, #2             // arch_local_irq_enable\n"
38                      "nop",
39                      __msr_s(SYS_ICC_PMR_EL1, "%0")
40                      "dsb    sy",
(gdb)
```

Known bugs, limitations or technical issues

DPAA1 should be compiled out while creating the image for dump-capture/second kernel.

In second kernel, interfaces, such as qDMA, DPAA2 Ethernet and PCIe do not work because of MSI limitation. See known issues list.

Chapter 8
QorIQ networking technologies

8.1 Summary of networking technologies

NXP provides several different hardware networking architectures. Each SoC incorporates one of them. The hardware architectures are:

HW networking architectures	Blocks
DPAA1	QMan, BMan, and FMan
DPAA2	QBMan, WRIOP, and optionally AIOP
DPAA2 and DPAA1 are relatives in that they both use generic hardware-based queues. Also, each supports additional accelerators such as SEC via these queues.	
PFE	PFE package engine block
veTSEC	veTSEC traditional Ethernet controller block
ENETC	TSN capable Ethernet controller integrated as a PCIe root complex
TSN Switch	TSN capable L2 Switch (that is Felix) integrated as PCIe root complex

The following table shows which SoCs supported by LSDK use which networking hardware architecture.

HW networking architectures	SoCs
DPAA1	LS1023A, LS1043A, LS1026A, LS1046A
DPAA2	LS1044A, LS1048A, LS1084A, LS1088A, LS2044A, LS2048A, LS2084A, LS2088A, LX2160A
PFE	LS1012A
veTSEC	LS1021A
ENETC	LS1028A
TSN switch	LS1028A

8.2 DPAA1-specific Software

8.2.1 DPAA1 software architecture overview

8.2.1.1 Introduction

Multicore processing, or multiple execution thread processing, introduces unique considerations to the architecture of networking systems, including processor load balancing/utilization, flow order maintenance, and efficient cache utilization. Herein is a review of the key features, functions, and properties enabled by the QorIQ DPAA1 (Data Path Acceleration Architecture first generation) hardware and demonstrates how to best architect software to leverage the DPAA1 hardware.

NOTE

In most hardware and other past documentation, DPAA first generation is refered to as DPAA. To avoid confusion with DPAA2 (second generation), we will refer to the first generation as DPAA1 in this documentation set.

By exploring how the DPAA1 is configured and leveraged in a particular application, the user can determine which elements and features to use. This streamlines the software development stage of implementation by allowing programmers to focus their technical understanding on the elements and features that are implemented in the system under development, thereby reducing the overall DPAA1 learning curve required to implement the application.

Our target audience is familiar with the material in **QorIQ Data Path Acceleration Architecture (DPAA1) Reference Manual**.

Benefits of DPAA1

The primary intent of DPAA1 is to provide intelligence within the IO portion of the System-on-Chip (SOC) to route and manage the processing work associated with traffic flows to simplify ordering and load balance concerns associated with multi core processing. The DPAA1 hardware inspects ingress traffic and extracts user defined flows from the port traffic. It then steers specific flows (or related traffic) to a specific core or set of cores.

Architecting a networking application with a multicore processor presents challenges, such as workload balance and maintaining flow order, which are not present in a single core design. Without hardware assistance, the software must implement techniques that are inefficient and cumbersome, reducing the performance benefit of multiple cores. To address workload balance and flow order challenges, DPAA1 determines and separates ingress flows then manages the temporary, permanent, or semi-permanent flow-to-core affinity. DPAA1 also provides a work priority scheme, which ensures ingress critical flows are addressed properly and frees software from the need to implement a queuing mechanism on egress. As the hardware determines which core will process which packet, performance is boosted by direct cache warming/stashing as well as by providing biasing for core-to-flow affinity, which ensures that flow-specific data structures can remain in the core's cache.

By understanding how the DPAA1 is leveraged in a particular design, the system architect can map out the application to meet the performance goals and to utilize the DPAA1 features to leverage any legacy application software that may exist. Once this application map is defined, the architect can focus on more specific details of the implementation.

8.2.1.1.1 General architectural considerations

As the need for processing capability has grown, the only practical way to increase the performance on a single silicon part is to increase the number of general purpose processing cores (CPUs). However, many legacy designs run on a single processor; introducing multiple processors into the system creates special considerations, especially for a networking application.

8.2.1.1.2 Multicore design

Multicore processing, or multiple execution thread processing, introduces unique considerations. Most networking applications are split between data and control plane tasks. In general, control plane tasks manage the system within the broad network of equipment. While the control plane may process control packets between systems, the control plane process is not involved in the bulk processing of the data traffic. This task is left to the data plane processing task or program.

The general flow of the data plane program is to receive data traffic (in general, packets or frames), process or transform the data in some way and then send the packets to the next hop or device in the network. In many cases, the processing of the traffic depends on the type of traffic. In addition, the traffic usually exists in terms of a flow, a stream of traffic where the packets are related. A simple example could be a connection between two clients that, at the packet level, is defined by the source and destination IP address. Typically, multiple flows are interleaved on a single interface port; the number of flows per port depends on the interface bandwidth as well as on the bandwidth and type of flows involved.

8.2.1.1.3 Parse/classification software offload

DPAA1 provides intelligence within the IO subsection of the SoC to split traffic into user-defined queues. One advantage is that the intelligence used to divide the traffic can be leveraged at a system level.

In addition to sorting and separating the traffic, DPAA1 can append useful processing information into the stream; offloading the need for the software to perform these functions (see the following figure).

Note that DPAA1 is not intended to replace significant packet processing or to perform extensive classification tasks. However, some applications may benefit from the streamlining that results from the parse/classify/distribute function within DPAA1. The ability to identify and separate flow traffic is fundamental to how DPAA1 solves other multicore application issues.

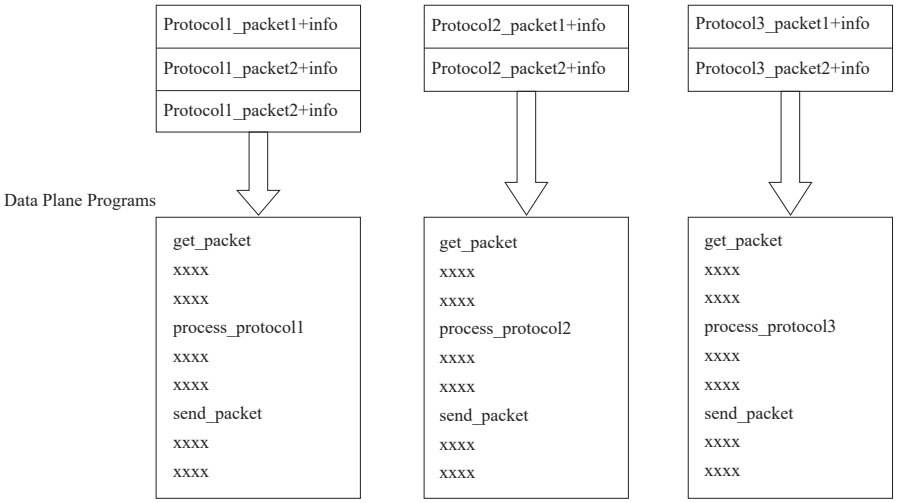

Figure 47. Hardware-sorted protocol flow

8.2.1.1.4 Flow order considerations

In most networking applications, individual traffic flows through the system require that the egress packets remain in the order they are received. In a single processor core system, this requirement is easy to implement. As long as the data plane software follows a run-to-completion model on a per-packet basis, the egress order will match the ingress packet order. However, if multiple processors are implemented in a true Symmetrical Multicore Processing (SMP) model in the system, the egress packet flow may be out of order with respect to the ingress flow. This may be caused when multiple cores simultaneously process packets from the same flow.

Even if the code flow is identical, factors such as cache hits/misses, DRAM page hits/misses, interrupts, control plane and OS tasks can cause some variability in the processing path, allowing egress packets to “pass” within the same flow, as shown in the below figure.

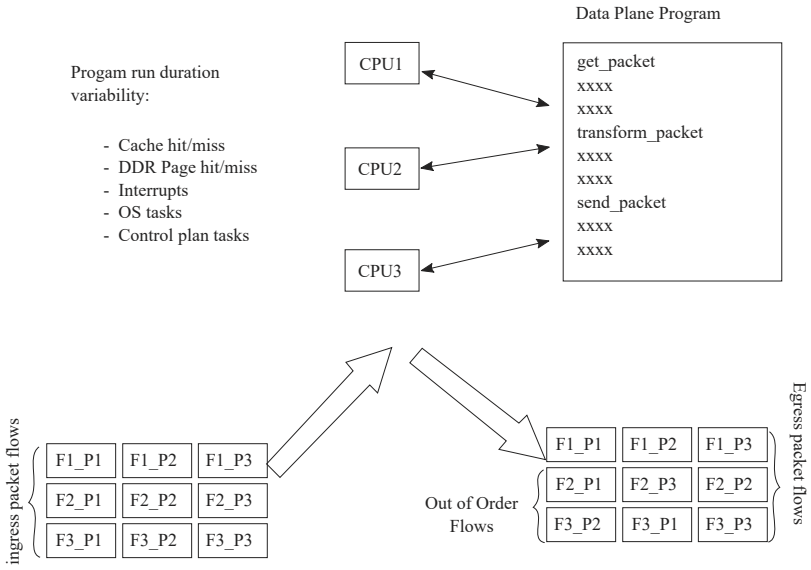

Figure 48. Multicore Flow Reordering

For some applications, it is acceptable to reorder the flows from ingress to egress. However, most applications require that order is maintained. When no hardware is available to assist with this ordering, the software must maintain flow order. Typically, this requires additional code to determine the sequence of the packet currently being processed, as well as a reference to a data structure that maintains order information for each flow in the system. As multiple processors need to access and update this state information, access to this structure must be carefully controlled, typically by using a lock mechanism that can be expensive with regard to program cycles and processing flow (see the below figure). One of the goals of the DPAA1 architecture is to provide the system designer with hardware to assist with packet ordering issues.

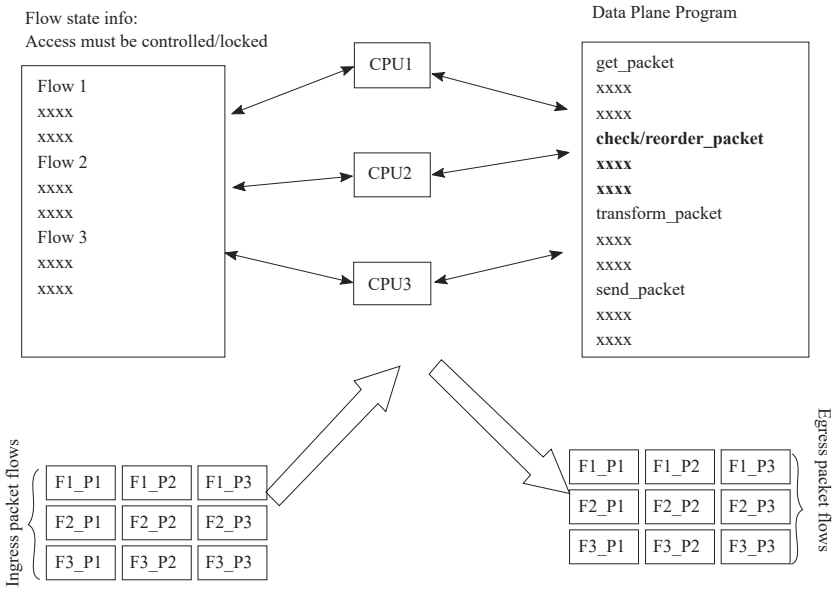

Figure 49. Implementing Order in Software

8.2.1.1.5 Managing flow-to-core affinity

Multicore processing, or multiple execution thread processing, introduces unique considerations to the architecture of networking systems, including processor load balancing/utilization, flow order maintenance, and efficient cache utilization. Herein is a review of the key features, functions, and properties enabled by the QorIQ DPAA1 (Data Path Acceleration Architecture) hardware and demonstrates how to best architect software to leverage the DPAA1 hardware.

In a multicore networking system, if the hardware configuration always allows a specific core to process a specific flow then the binding of the flow to the core is described as providing flow affinity. If a specific flow is always processed by a specific processor core then for that flow the system acts like a single core system. In this case, flow order is preserved because there is a single thread of operation processing the flow; with a run-to-completion model, there is no opportunity for egress packets to be reordered with respect to ingress packets.

Another advantage of a specific flow being affined to a core is that the cache local to that core (L1 and possibly L2, depending on the specific core type) is less likely to miss when processing the packets because the core's data cache will not fetch flow state information for flows to which it is not affined. Also, because multiple processing entities have no need to access the same individual flow state information, the system need not lock the access to the individual flow state data. DPAA1 offers several options to define and manage flow-to-core affinity.

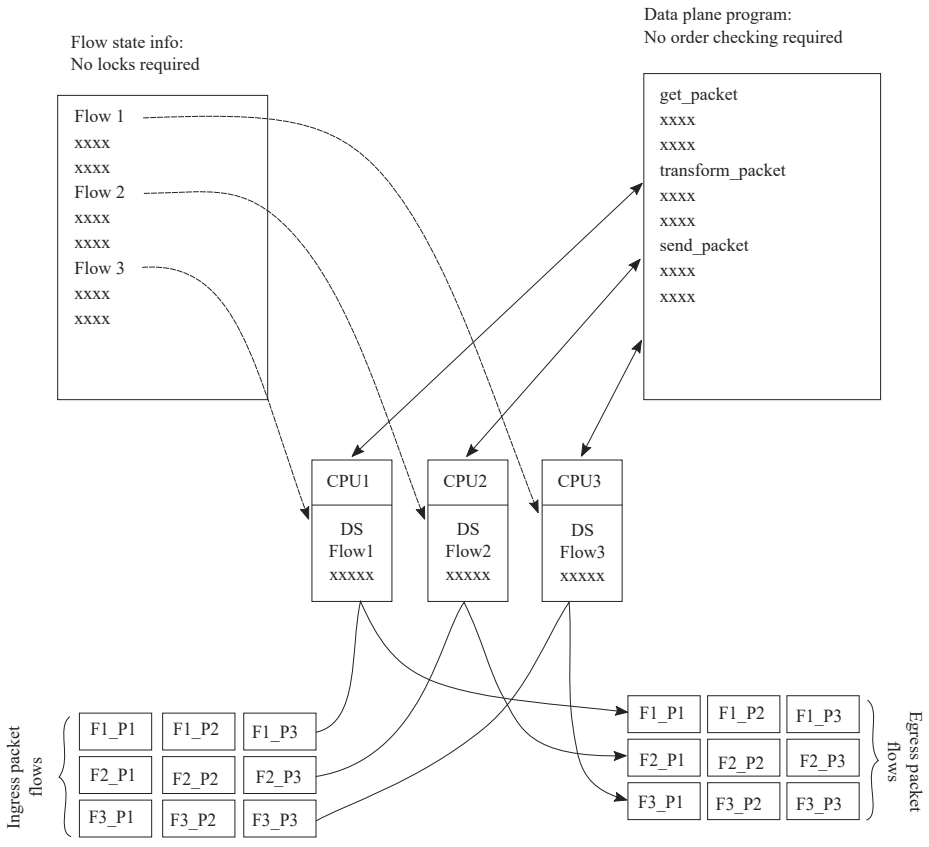

Figure 50. Managing flow-to-core affinity

Many networking applications require intensive, repetitive algorithms to be performed on large portions of the data stream(s). While software in the processor cores could perform these algorithms, specific hardware offload engines often better address specific algorithms. Cryptographic and pattern matching accelerators are examples of this in the QorIQ family. These accelerators act as standalone hardware elements that are fed blocks or streams of data, perform the required processing, and then provide the output in a separate (or perhaps overwritten) data block within the system. The performance boost is significant for tasks that can be done by these hardware accelerators as compared to a software implementation.

In DPAA1-equipped SoCs, these offload engines exist as peers to the cores and IO elements, and they use the same queuing mechanism to obtain and transfer data. The details of the specific processing performed by these offload engines is beyond the scope of this document; however, it is important to determine which of these engines will be leveraged in the specific application. DPAA1 can then be properly defined to implement the most efficient configuration or definition of the DPAA1 elements.

8.2.1.2 DPAA1 Goals

A brief overview of the DPAA1 elements in order to contextualize the application mapping activities. For more details on the DPAA1 architecture, see the **QorIQ Data Path Acceleration Architecture (DPAA1) Reference Manual**

The primary goals of DPAA1 are as follows:

- To provide intelligence within the IO portion of the SoC.
- To route and manage the processing work associated with traffic flows.
- To simplify the ordering and load balance concerns associated with multicore processing.

DPAA1 achieves these goals by inspecting and separating ingress traffic into Frame Queues (FQs). In general, the intent is to define a flow or set of flows as the traffic in a particular FQ. The FQs are associated to a specific core or set of cores via a channel. Within the channel definition, the FQs can be prioritized among each other using the Work Queue (WQ) mechanism. The egress flow is similar to the ingress flow. The processors place traffic on a specific FQ, which is associated to a particular physical port via a channel. The same priority scheme using WQs exists on egress, allowing higher priority traffic to pass lower priority traffic on egress without software intervention.

8.2.1.3 FMan Overview

The FMan inspects traffic, splits it into FQs on ingress, and sends traffic from the FQs to the interface on egress.

On ingress traffic, the FMan is configured to determine the traffic split required by the PCD (Parse, Classify, Distribute) function. This allows the user to decide how he wants to define his traffic: typically, by flows or classes of traffic. The PCD can be configured to route all traffic on one port to a single queue or with a higher level of complexity where large numbers of queues are defined and managed. The PCD can identify traffic based on the specific content of the incoming packets (usually within the header) or packet reception rates (policing).

The parse function is used to identify which fields within the data frame determine the traffic split. The fields used may be defined by industry standards, or the user may employ a programmable soft parse feature to accommodate proprietary field (typically header) definition(s). The results of the parse function may be used directly to determine the frame queue; or, the contents of the fields selected by the parse function may be used as a key to select the frame queue. The parse function employs a programmed mask to allow the use of selected fields.

The resultant key from the parse function may be used to assign traffic to a specific queue based on a specific exact match definition of fields in the header. Alternatively, a range of queues can be defined either by using the resultant key directly (if there are a small number of bits in the key) or by performing a hash of the key to use a large number of bits in the flow identifier and create a manageable number of queues.

The FMan also provides a policer function, which is rate-based and allows the user to mark or drop a specific frame that exceeds a traffic threshold. The policing is based on a two-rate, three-color marking algorithm (RFC2698). The sustained and peak rates as well as the burst sizes are user-configurable.

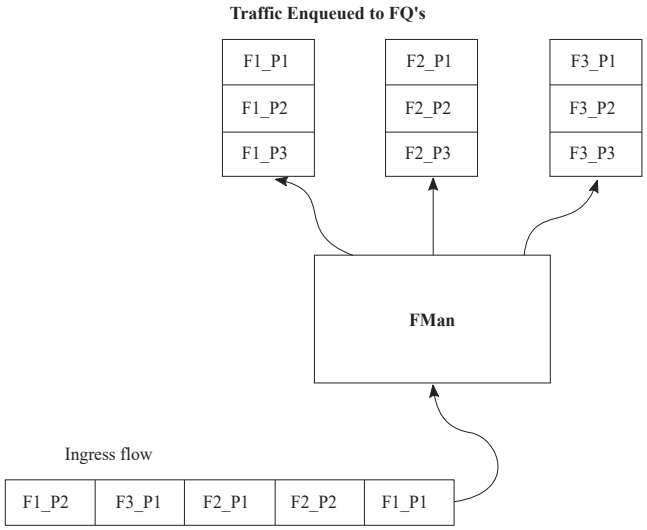

Figure 51. Ingress FMan Flow

The figure above shows the FMan splitting ingress traffic on an external port into a number of queues. However, the FMan works in a similar way on egress: it receives traffic from FQs then transmits the traffic on the designated external port. Alternatively, the FMan can be used to process flows internally via the offline port mechanism: traffic is dequeued (from some other element in the system), processed, then enqueued onto a frame queue processing further within the system.

On ingress traffic, the FMan generates an internal context (IC) data block, which it uses as it performs the PCD function. Optionally, some or all of this information may be added into the frames as they are passed along for further processing. For egress or offline processing, the IC data can be passed with each frame to be processed. This data is mostly the result of the PCD actions and includes the results of the parser, which may be useful for the application software.

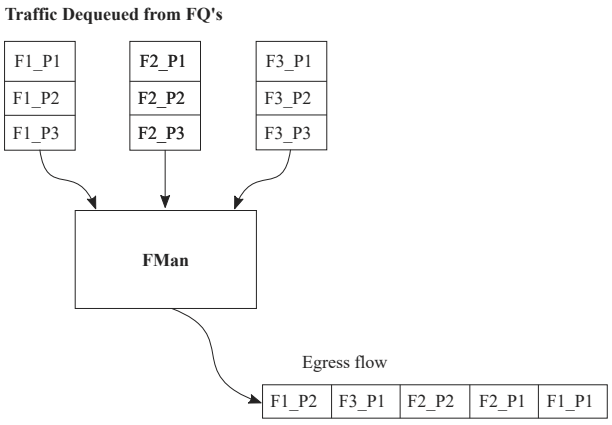

Figure 52. FMan Egress Flow

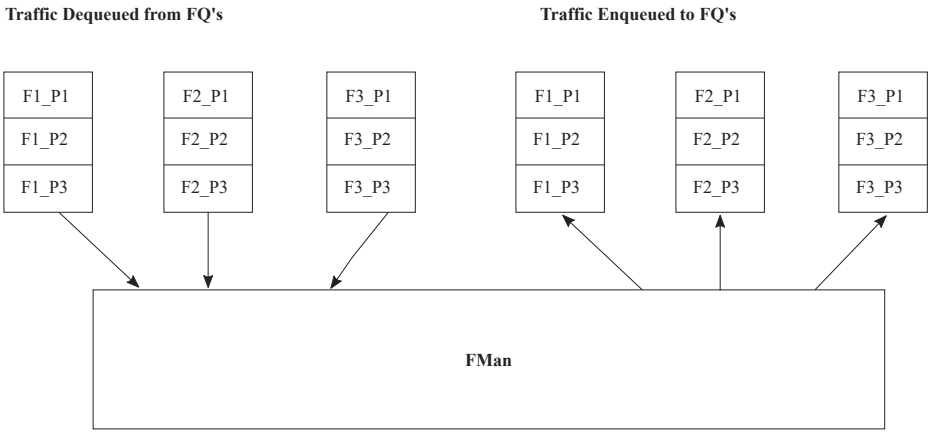

Figure 53. FMan Offline Flow

8.2.1.4 QMan Overview

The QMan links the FQs to producers and consumers (of data traffic) within the SoC. The producers/consumers are either FMan, acceleration blocks, or CPU cores.

All the producers/consumers have one channel, each of which is referred to as a dedicated channel. Additionally, there are a number of pool channels available to allow multiple cores (not FMan or accelerators) to service the same channel. Note that there are channels for each external FMan port, the number of which depends on the SoC, as well as the internal offline ports.

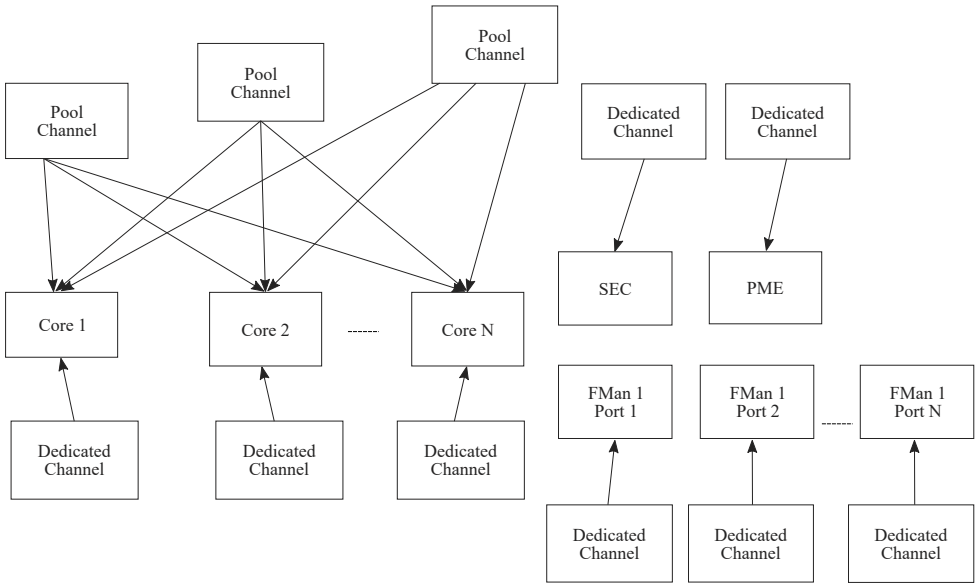

Figure 54. DPAA1 Channel Types

Each channel provides for eight levels of priority, each of which has its own work queue (WQ). The two highest level WQs are strict priority: traffic from WQ0 must be drained before any other traffic flows; then traffic from WQ1 and then traffic from the other six

WQs is allowed to pass. The last six WQs are grouped together in two groups of three, which are configurable in a weighted round robin fashion. Most applications do not need to use all priority levels. When multiple FQs are assigned to the same WQ, QMan implements a credit-based scheme to determine which FQ is scheduled (providing frames to be processed) and how many frames (actually the credit is defined by the number of bytes in the frames) it can dequeue before QMan switches the scheduling to the next FQ on the WQ. If a higher priority WQ becomes active (that is, one of the FQs in the higher priority WQ receives a frame to become non-empty) then the dequeue from the lower priority FQ is suspended until the higher priority frames are dequeued. After the higher priority FQ is serviced, when the lower priority FQ restarts servicing, it does so with the remaining credit it had before being pre-empted by the higher priority FQ.

When the DPAA1 elements of the SoC are initialized, the FQs are associated with WQs, allowing the traffic to be steered to the desired core (dedicated connect channel), set of cores (pool channel), FMan, or accelerator, using a defined priority.

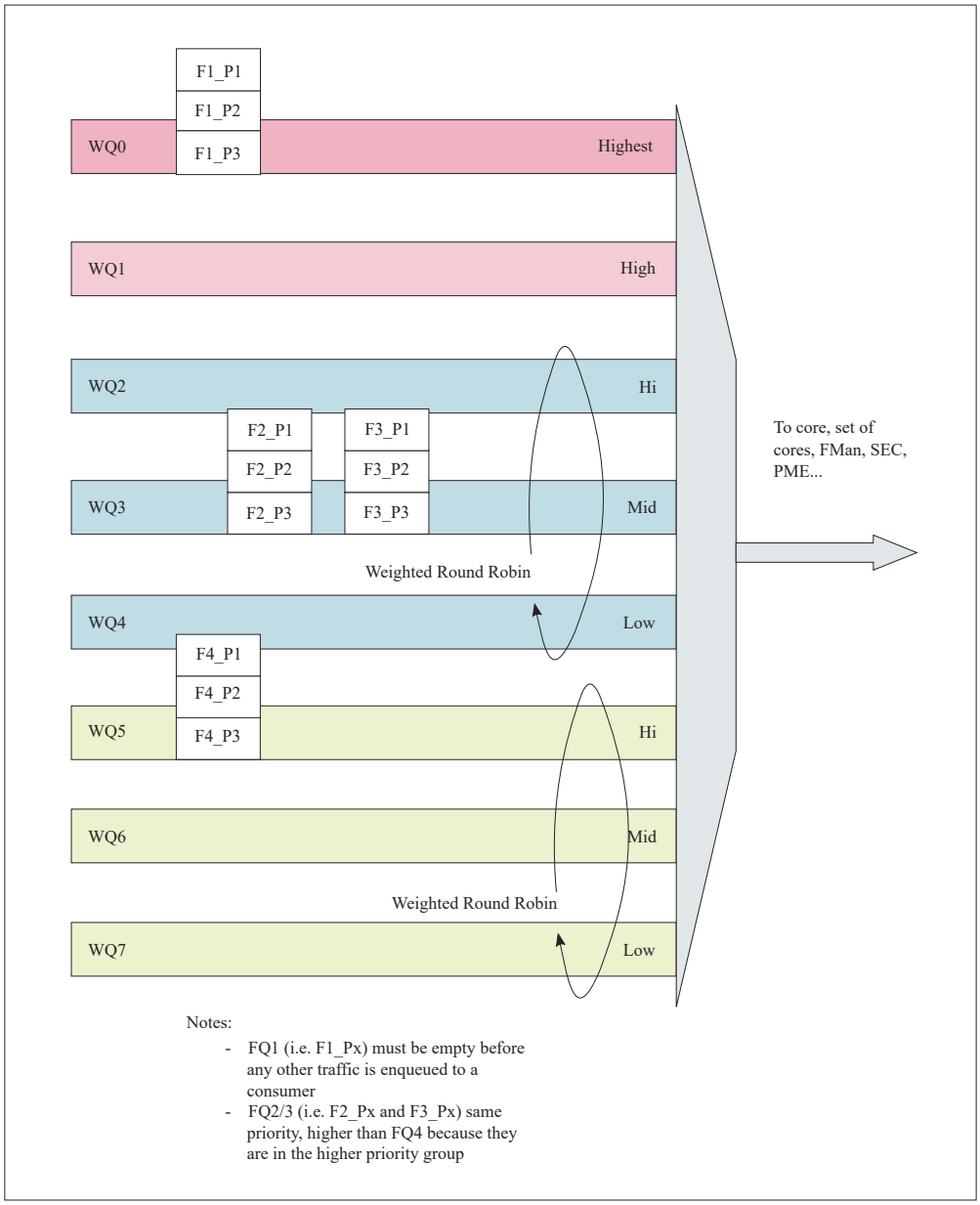

Figure 55. Prioritizing Work

QMan: Portals

A single portal exists for each non-core DPAA1 producer/consumer (FMan, SEC, and PME). This is a data structure internal to the SoC that passes data directly to/from the consumer's direct connect channel.

Software portals are associated with the processor cores and are, effectively, data structures that the cores use to pass (enqueue) packets to or receive (dequeue) packets from the channels associated with that portal (core). Each SoC has at least as many software portals as there are cores. Software portals are the interface through which DPAA1 provides the data processing workload for a single thread of execution.

The portal structure consists of the following:

- The Dequeue Response Ring (DQRR) determines the next packet to be processed.
- The Enqueue Command Ring (EQCR) sends packets from the core to the other elements.
- The Message Ring (MR) notifies the core of the action (for example, attempted dequeue rejected, and so on).
- The Management command and response control registers.

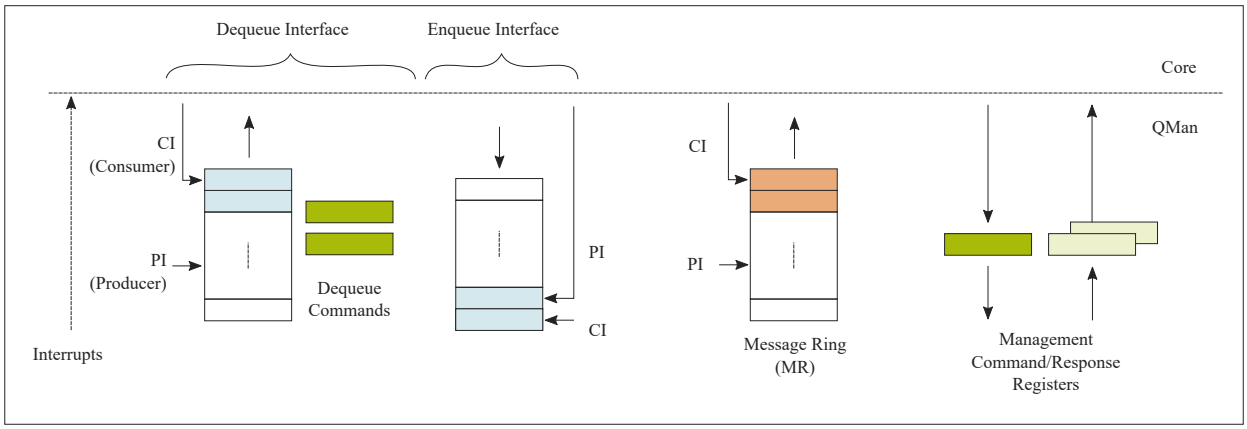

Figure 56. Processor Core Portal

On ingress, the DQRR acts as a small buffer of incoming packets to a particular core. When a section of software performs a get packet type operation, it gets the packet from a pointer provided as an entry in the DQRR for the specific core running that software. Note that the DQRR consolidates all potential channels that may be feeding frames to a particular core. There are up to 16 entries in each DQRR. Each DQRR entry contains:

- a pointer to the packet to be processed,
- an identifier of the frame queue from which the packet originated,
- a sequence number (when configured),
- and additional FMan-determined data (when configured).

When configured for push mode, QMan attempts to fill the DQRR from all the potential incoming channels. When configured in pull mode, QMan only adds one DQRR entry when it is told to by the requesting core. Pull mode may be useful in cases where the traffic flows must be very tightly controlled; however, push mode is normally considered the preferred mode for most applications.

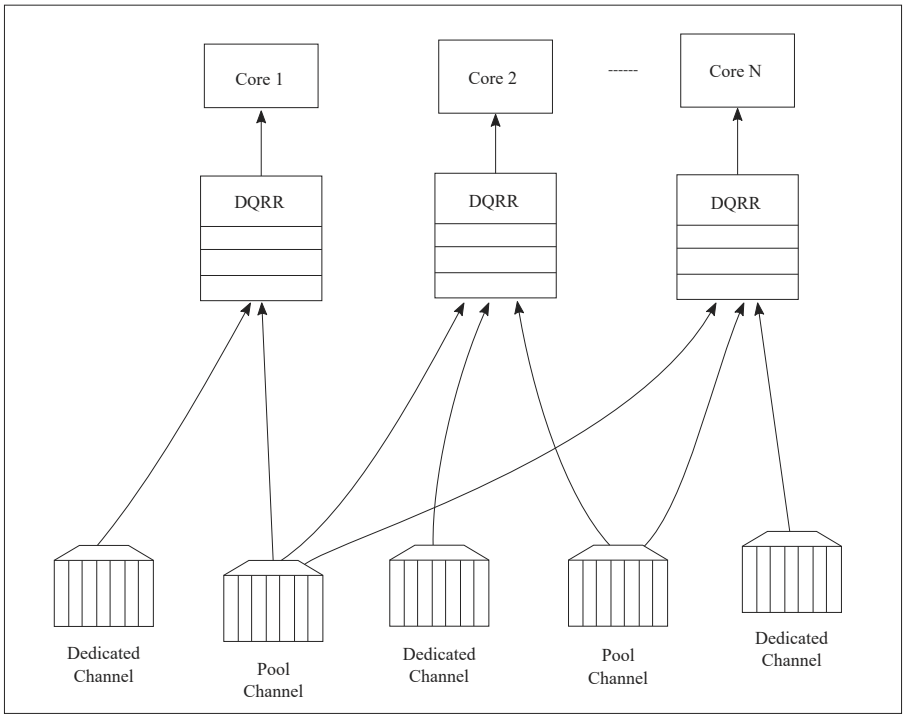

Figure 57. Ingress Channel to Portal Options

The DQRRs are tightly coupled to a processor core. DPAA1 implements a feature that allows the DQRR mechanism to pre-allocate, or stash, the L1 and/or L2 cache with data related to the packet to be processed by that core. The intent is to have the data required for packet processing in the cache before the processor runs the “get packet” routine, thereby reducing the overall time spent processing a particular packet.

The following is data that may be warmed into the caches:

- The DQRR entry
- The packet or portion of the packet for a single buffer packet
- The scatter gather list for a multi-buffer packet
- Additional data added by FMan
- FQ context (A and B)

The FQ context is a user-defined space in memory that contains data associated with the FQ (per flow) to be processed. The intent is to place in this data area the state information required when processing a packet for this flow. The FQ context is part of the FQ definition, which is performed when the FQ is initialized.

The cache warming feature is enabled by configuring the capability and some definition of the FQs and QMan at system initialization time. This can provide a significant performance boost and requires little to no change in the processing flow. When defining the system architecture, it is highly recommended that the user enable this feature and consider how to maximize its impact.

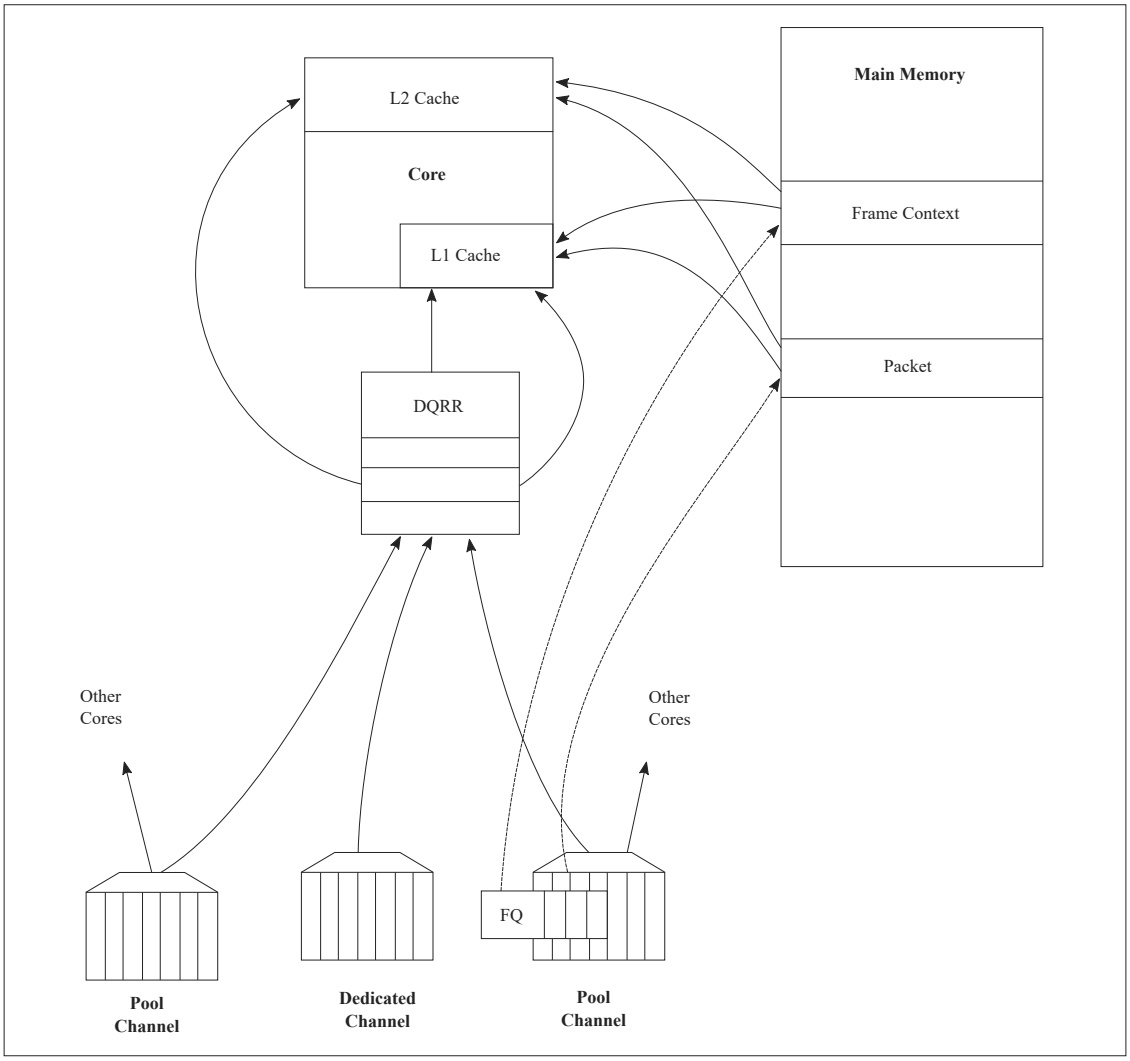

Figure 58. Cache Warming Options

In addition to getting packet information from the DQRR, the software also manages the DQRR by indicating which DQRR entry it will consume next. This is how the QMan determines when the DQRR (portal) is ready to process more frames. Two basic options are provided. In the first option, the software can update the ring pointer after one or several entries have been consumed. By waiting to indicate the consumption of multiple frames, the performance impact of the write doing this is minimized. The second option is to use the discrete consumption acknowledgment (DCA) mode. This mode allows the consumption indication to be directly associated with a frame enqueue operation from the portal (that is, after the frame has been processed and is on the way to the egress queue). This tracking of the DQRR Ring Pointer CI (Consumer Index) helps implement frame ordering by ensuring that QMan does not dequeue a frame from the same FQ (or flow) to a different core until the processing is completed.

8.2.1.5 QMan Scheduling

The QMan links the FQs to producers and consumers (of data traffic) within the SoC.

QMan: Queue schedule options

The primary communication path between QMan and the processor cores is the portal memory structure. QMan uses this interface to schedule the frames to be processed on a per-core basis. For a dedicated channel, the process is straightforward: the QMan places an entry in the DQRR for the portal (processor) of the dedicated channel and dequeues the frame from an FQ to the portal. To do this, QMan determines, based on the priority scheme (previously described) for the channel, which frame should be processed next and then adds an entry to the DQRR for the portal associated with the channel.

When configured for push mode, once the portal requests QMan to provide frames for processing, QMan provides frames until halted. When the DQRR is full and more frames are destined for the portal, QMan waits for an empty slot to become available in the DQRR and then adds more entries (frames to be processed) as slots become available.

When configured for pull mode, the QMan only adds entries to the DQRR at the direct request of the portal (software request). The command to the QMan that determines if a push or pull mode is implemented and tells QMan to provide either one or from one to three (up to three if there are that many frames to be dequeued) frames at a time. This is a tradeoff of smaller granularity (for one frame only) versus memory access consolidation (if the up to three frames option is selected).

When the system is configured to use pool channels, a portal may get frames from more than one channel and a channel may provide frames (work) to more than one portal (core). QMan dequeues frames using the same mechanism described above (updating DQRR) and QMan also provides for some specific scheduling options to account for the pool channel case in which multiple cores may process the same channel.

QMan: Default Scheduling

The default scheduling is to have an FQ send frames to the same core for as long as that FQ is active. An FQ is active until it uses up its allocated credit or becomes empty. After an FQ uses its credit, it is rescheduled again, until it is empty. For its schedule opportunity, the FQ is active and all frames dequeued during the opportunity go to the same core. After the credit is consumed, QMan reactivates that FQ but may assign the flow processing to a different core. This provides for a sticky affinity during the period of the schedule opportunity. The schedule opportunity is managed by the amount of credit assigned to the FQ.

NOTE

A larger credit assigned to an FQ provides for a stickier core affinity, but his makes the processing work granularity larger and may affect load balancing.

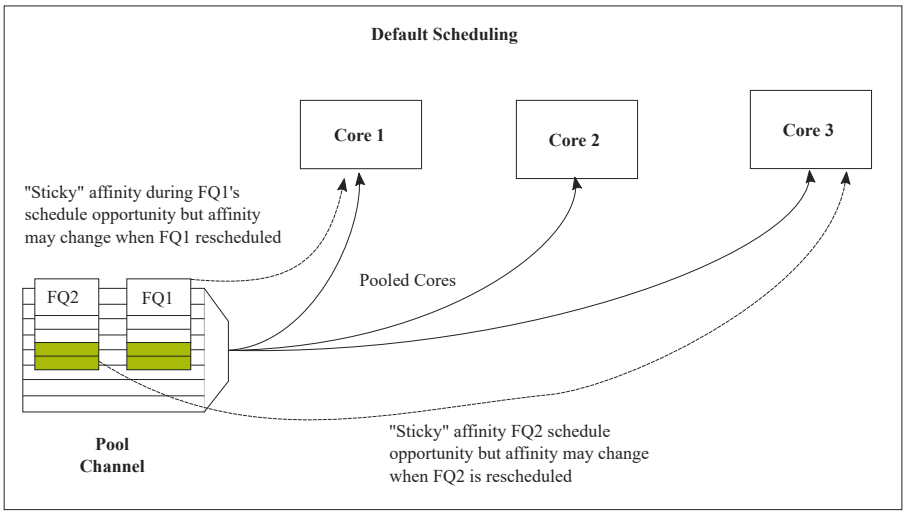

Figure 59. Default Scheduling

QMan: Hold Active Scheduling

With the hold active option, when the QMan assigns an FQ to a particular core, that FQ is affined to that core until it is empty. Even after the FQ's credit is consumed, then it is rescheduled with the next schedule opportunity, the frames go to the same core for processing. This effectively makes the flow-to-core affinity stickier than the default case, ensuring the same flow is processed by the same core for as long as there are frames queued up for processing. Because the flow-to-core affinity is not hard-wired as in the dedicated channel case, the software may still need to account for potential order issues. However, because of flow-to-core biasing, the flow state data is more likely to remain in L1 or L2 cache, increasing hit rates and thus improving processing performance. Because of the specific QMan implementation, only four FQs may be in held active state at a given time.

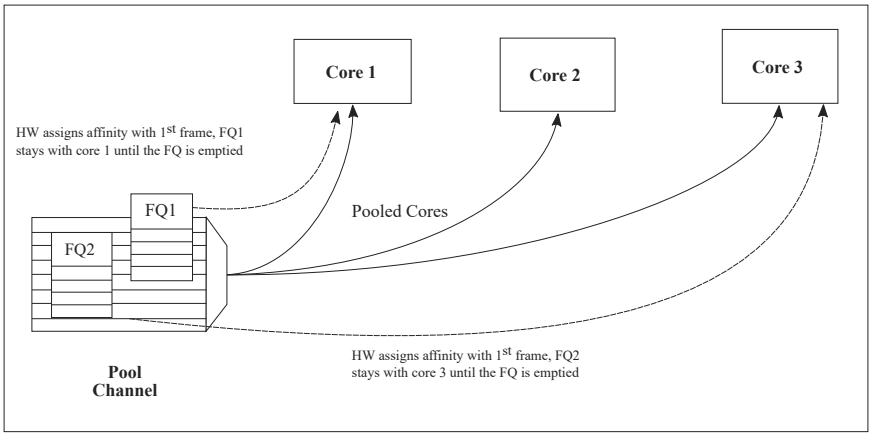

Figure 60. Hold Active Scheduling

QMan: Avoid blocking scheduling

Avoid blocking scheduling QMan can also be scheduled in the avoid blocking mode, which is mutually exclusive to hold active. In this mode, QMan schedules frames for an FQ to any available core in the pool channel. For example, if the credit allows for three frames to be dequeued, the first frame may go to core 1. But, when that dequeue fills core 1's DQRR, QMan finds the next available DQRR entry in any core in the pool. With avoid blocking mode there is no biasing of the flow to core affinity. This mode is useful if a particular flow either has no specific order requirements or the anticipated processing required for a single flow is expected to consume more than one core's worth of processing capability.

Alternatively, software can bypass QMan scheduling and directly control the dequeue of frame descriptors from the FQ. This mode is implemented by placing the FQ in parked state. This allows software to determine precisely which flow will be processed (by the core running the software). However, it requires software to manage the scheduling, which can add overhead and impact performance.

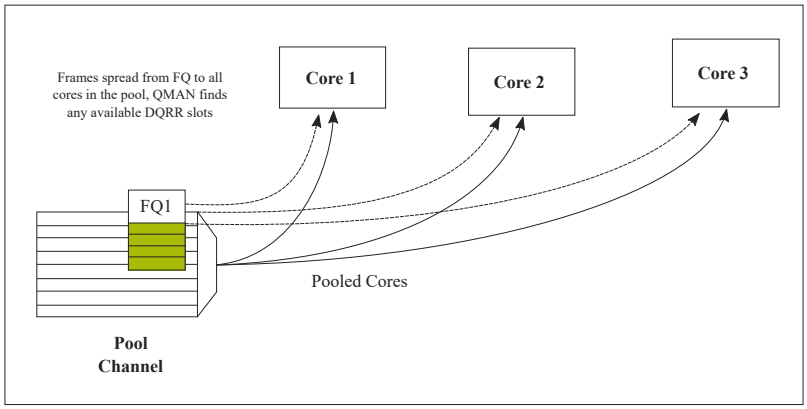

Figure 61. Avoid Blocking Scheduling

QMan: Order Definition/ Restoration

The QMan provides a mechanism to strictly enforce ordering. Each FQ may be defined to participate in the process of an order definition point and/or an order restoration point. On ingress, an order definition point provides for a 14 bit sequence number assigned to each frame (incremented per frame) in a FQ in the order in which they were received on the interface. The sequence number is placed in the DQRR entry for the frame when it is dequeued to a portal. This allows software to efficiently determine which packet it is currently processing in the sequence without the need to access a shared (between cores) data structure. On egress, an order restoration point delays placing a frame onto the FQ until the expected next sequence number is encountered. From the software standpoint, once it has determined the relative sequence of a packet, it can enqueue it and resume other processing in a fire-and-forget manner.

NOTE

The order definition points and order restoration points are not dependent on each other; it is possible to have one without the other depending on application requirements. To effectively use these mechanisms, the packet software must be aware of the sequence tagging.

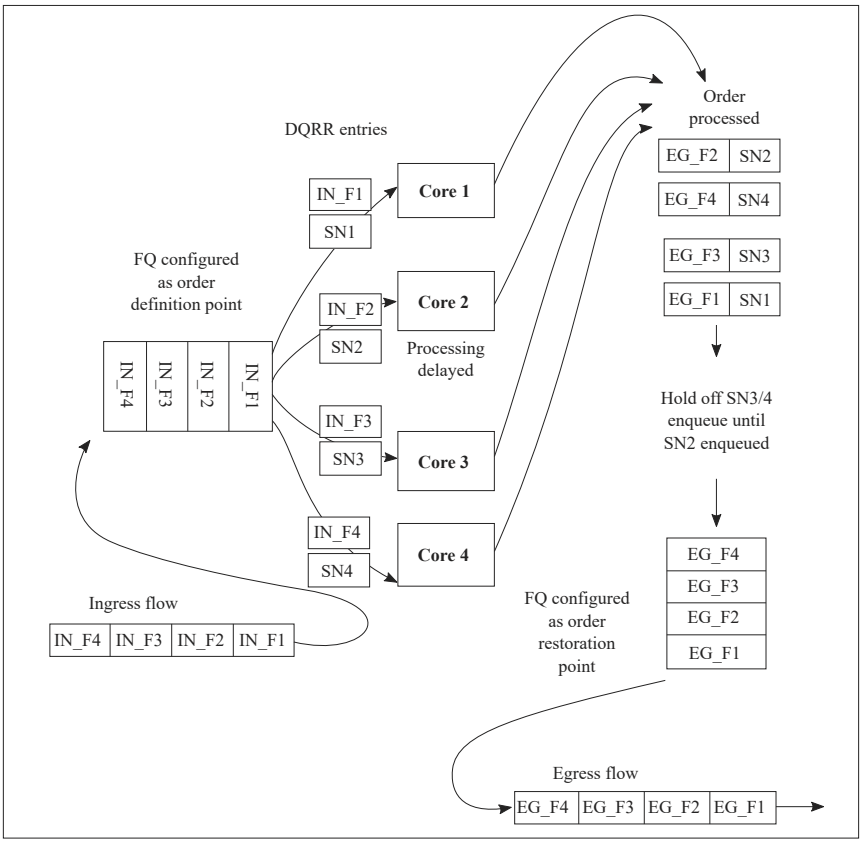

Figure 62. Order Definition/Restoration

As processors enqueue packets for egress, it is possible that they may skip a sequence number because of the nature of the protocol being processed. To handle this situation, each FQ that participates in the order restoration service maintains its own Next Expected Sequence Number (NESN). When the difference between the sequence number of the next expected and the most recently received sequence number exceeds the configurable ORP threshold, QMan gives up on the missing frame(s) and autonomously advances the NESN to bring the skew within threshold. This causes any deferred enqueus that are currently held in the ORP link list to become unblocked and immediately enqueue them to their destination FQ. If the “skipped” frame arrives after this, the ORP can be configured to reject or immediately enqueu the late arriving frame.

8.2.1.6 BMan

The BMan block manages the data buffers in memory. Processing cores, FMan, SEC and PME all may get a buffer directly from the BMan without additional software intervention. These elements are also responsible for releasing the buffers back to the pool when the buffer is no longer in use.

Typically, the FMan directly acquires a buffer from the BMan on ingress. When the traffic is terminated in the system, the core generally releases the buffer. When the traffic is received, processed, and then transmitted, the same buffer may be used throughout the process. In this case, the FMan may be configured to release the buffer automatically, when the transmit completes.

The BMan also supports single or multi-buffer frames. Single buffer frames generally require the adequately defined (or allocated) buffer size to contain the largest data frame and minimize system overhead. Multi-buffer frames potentially allow better memory utilization, but the entity passed between the producers/consumers is a scatter-gather table (that then points to the buffers within the frame) rather than the pointer to the entire frame, which adds an extra processing requirement to the processing element.

The software defines pools of buffers when the system is initialized. The BMan unit itself manages the pointers to the buffers provided by the oftware and can be configured to interrupt the software when it reaches a condition where the number of free buffers is depleted (so that software may provide more buffers as needed).

8.2.1.7 Order Handling

DPAA1 helps address packet order issues that may occur as a result of running an application in a multiple processor environment. And there are several ways to leverage DPAA1 to handle flow order in a system. The order preservation technique maps flows such that a specific flow always executes on a specific processor core.

For the case that DPAA1 handles flow order, the individual flow will not have multiple execution threads and the system will run much like a single core system. This option generally requires less impact to legacy, single-core software but may not effectively utilize all the processing cores in the system because it requires using a dedicated channel to the processors. The FMan PCD can be configured to either directly match a flow to a core or to use the hashing to provide traffic spreading that offers a permanent flow-to-core affinity.

If the application must use pool channels to balance the processing load then the software must be more involved in the ordering. The software can make use of the order restoration point function in QMan, which requires the software to manage a sequence number for frames enqueued on egress. Alternatively, the software can be implemented to maintain order by biasing the stickiness of flow affinity with default or hold active scheduling; lock contention and cache misses can be biased to increase performance.

If there are no order requirements then load balancing can be achieved by associating the non-ordered traffic to a pool of cores.

NOTE

All of these techniques may be implemented simultaneously on the same SoC; as long as the flow definition is precise enough to split the traffic types, it is simply a matter of proper defining the FQs and associating them to the proper channels in the system.

Using the exact match flow definition to preserve order

The simplest technique for preserving order is to route the ingress traffic of an individual flow to a particular core. For the particular flow in question, the system appears as a legacy, single-core programming model and, therefore, has minimal impact on the structure of the software. In this case, the flow definition determines the core affinity of a flow.

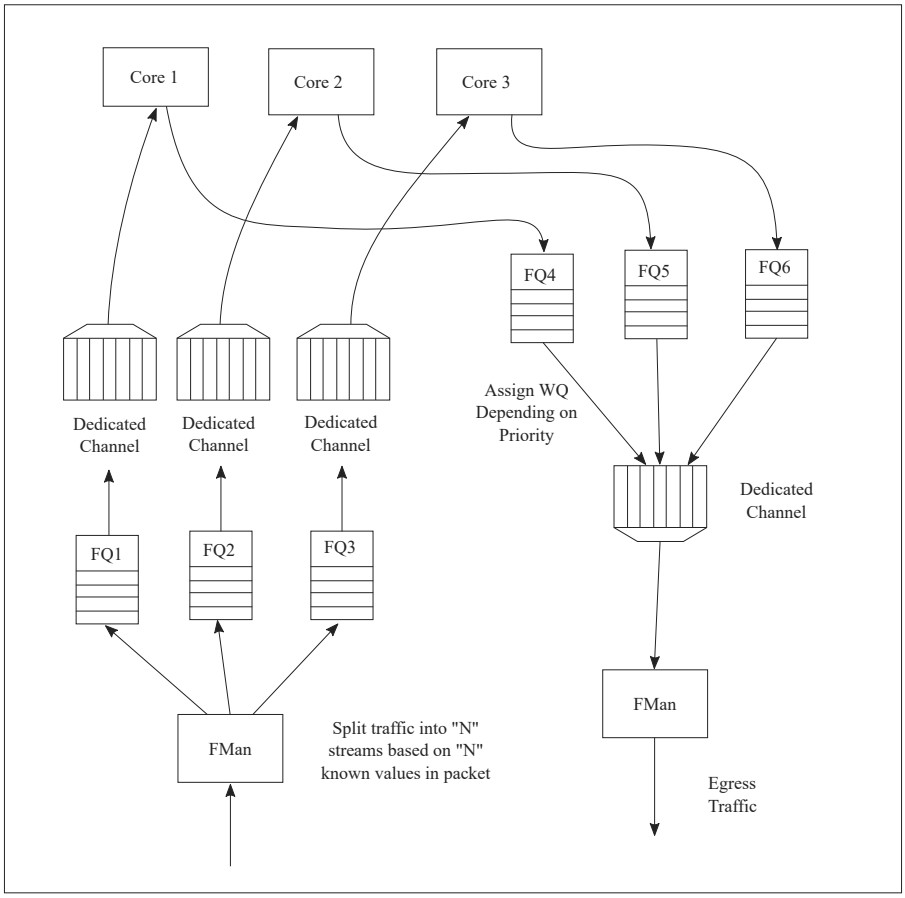

Figure 63. Direct Flow-to-Core Mapping (Order Preserved)

This technique is completely deterministic: the DPAA1 forces specific flows to a specific processor, so it may be easier to determine the performance assuming the ingress flows are completely understood and well defined. Notice that a particular processor core may become overloaded with traffic while another sits idle for increasingly random flow traffic rates.

To implement this sort of scheme, the FMan must be configured to exactly match fields in the traffic stream. This approach can only be used for a limited number of total flows before the FMan's internal resources are consumed.

In general, this sort of hard-wired approach should be reserved for either critical out-of-band traffic or for systems with a small number of flows that can benefit from the highly deterministic nature of the processing.

Using hashing to distribute flows across cores

The FMan can be configured to extract data from a field or fields within the data frame, build a key from that, and then hash the resultant key into a smaller number. This is a useful technique to handle a larger number of flows while ensuring that a particular flow is always associated with a particular core. An example is to define a flow as an IPv4 source + IPv4 destination address. Both fields together constitute 64 bits, so there are 264 possible combinations for the flow in that definition. The FMan then uses a hash algorithm to compress this into a manageable number of bits. Note that, because the hash algorithm is consistent, packets from a particular flow always go to the same FQ. By utilizing this technique, the flows can be spread in a pseudo-random, consistent (per flow) manner to a smaller number of FQs. For example, hashing the 64 bits down to 2 bits spreads the flows among four queues. Then these queues can be assigned to four separate cores by using a dedicated channel; effectively, this appears as a single-core implementation to any specific flow.

This spreading technique works best with a large number of possible flows to allow the hash algorithm to evenly spread the traffic between the FQs. In the example below, when the system is only expected to have eight flows at a given time, there is a good chance the hash will not assign exactly two flows per FQ to evenly distribute the flows between the four cores shown. However, when the number of flows handled is in the hundreds, the odds are good that the hash will evenly spread the flows for processing.

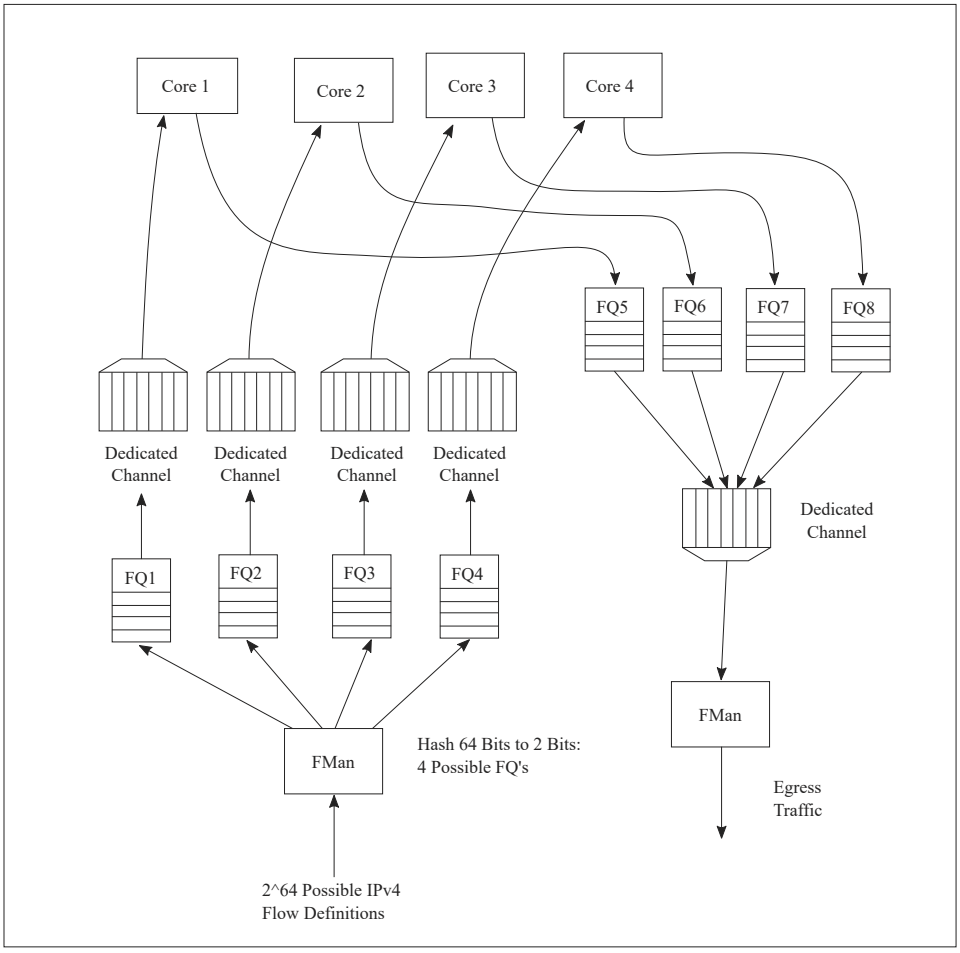

Figure 64. Simple flow distribution via hash (order preserved)

To optimize cache warming, the total number of hash buckets can be increased with flow-to-core affinity maintained. When the number of hash values is larger than the number of expected flows at a given time, it is likely though not guaranteed that each FQ will contain a single flow. For most applications, the penalty of a hash collision is two or more flows within a single FQ. In the case of multiple flows within a single FQ, the cache warming and temporary core affinity benefits are reduced unless the flow order is maintained per flow.

Note that there are 24 bits architected for the FQ ID, so there may be as many as 16 million FQs in the system. Although this total may be impractical, this does allow for the user to define more FQs than expected flows in order to reduce the likelihood of a hash collision; it also allows flexibility in assigning FQID’s in some meaningful manner. It is also possible to hash some fields in the data frame and concatenate other parse results, possibly allowing a defined one-to-one flow to FQ implementation without hash collisions.

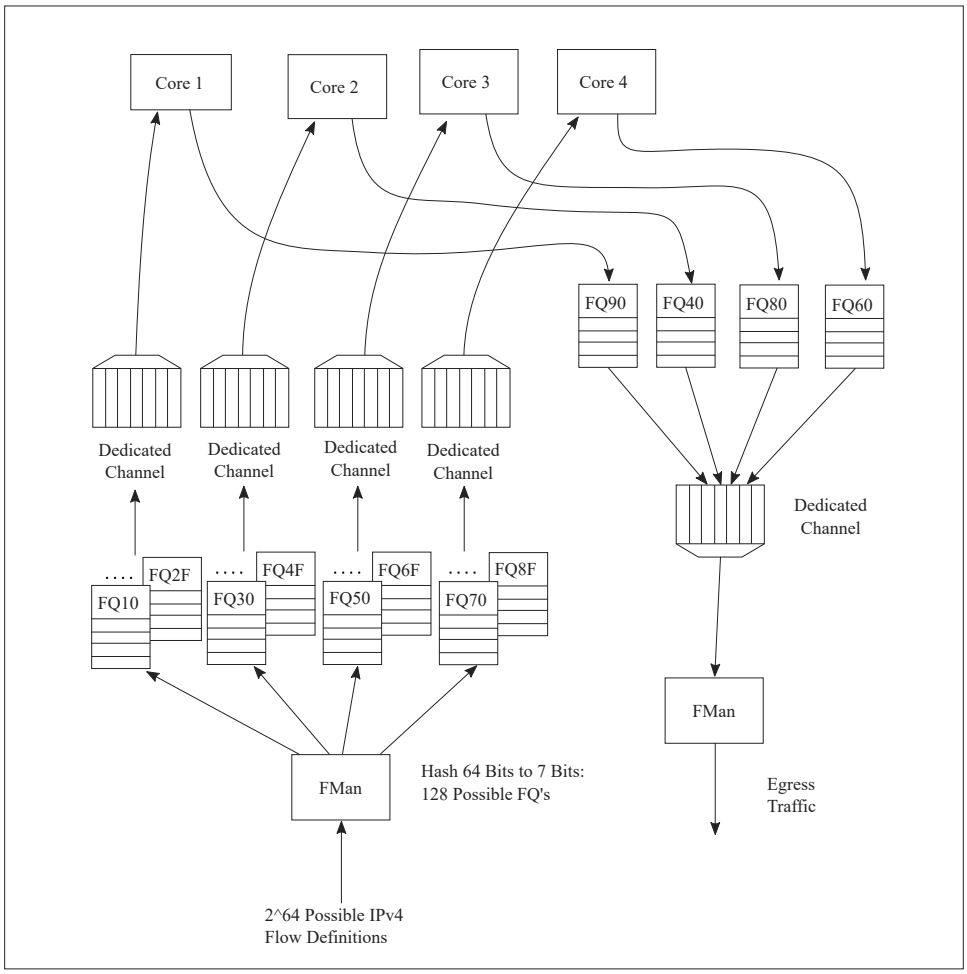

Figure 65. Using hash to assign one flow per FQ (order preserved and cache stashing effective)

8.2.1.8 Pool Channels

A user may employ a pool channel approach where multiple cores may pool together to service a specific set of flows. This alternative approach allows potentially better processing balance, but increases the likelihood that packets may be processed out of order allowing egress packets to pass ingress packets.

So far, the techniques discussed in this white paper have involved assigning specific flows to the same core to ensure that the same core always processes the same flow or set of flows, thereby preserving flow order. However, depending on the nature of the flows being processed (that is, variable frame sizes, difficulty efficiently spreading due to the nature of the flow contents, and so on), this may not effectively balance the processing load among the cores. Alternatively, a user may employ a pool channel approach where multiple cores may pool together to service a specific set of flows. This alternative approach allows potentially better processing balance, but increases the likelihood that packets may be processed out of order allowing egress packets to pass ingress packets. When the application does not require flows to be processed in order, the pool channel approach allows the easiest method for balancing the processing load. When a pool channel is used and order is required, the software must maintain order. The hardware order preservation may be used by the software to implement order without requiring locked access to shared state information. When the system uses a software lock to handle order then the default scheduling and hold active scheduling tends to minimize lock contention.

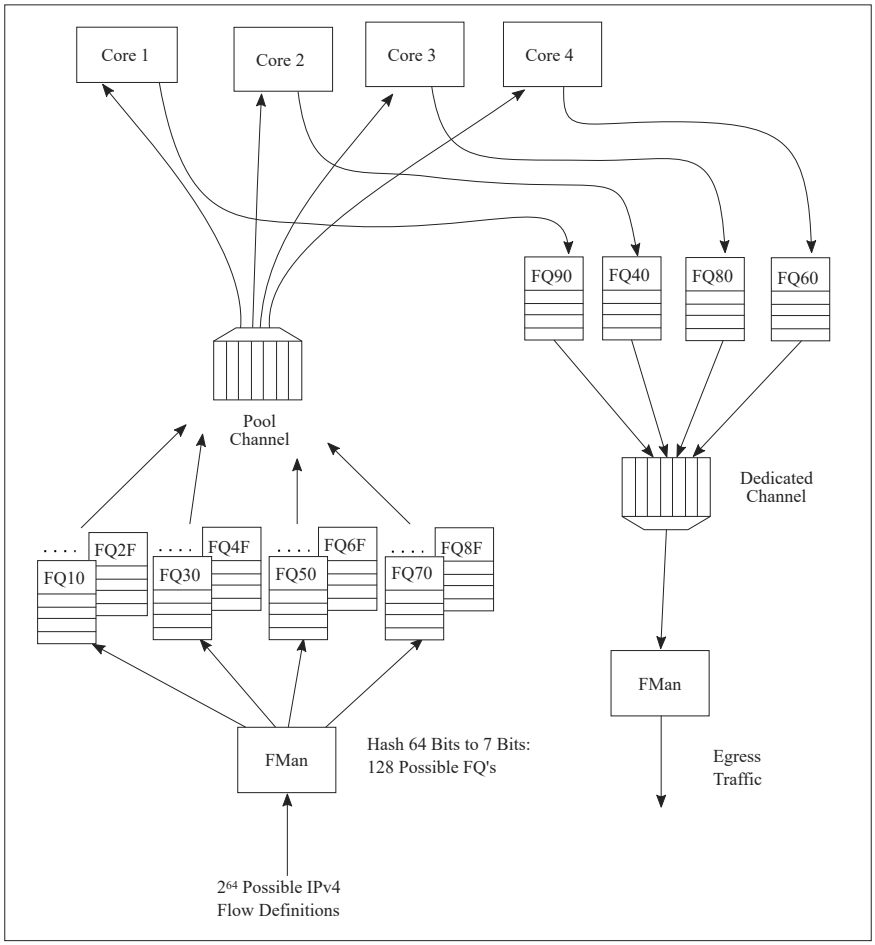

Figure 66. Using pool channel to balance processing

Order preservation using hold active scheduling and DCA mode

As shown in the examples above, order is preserved as long as two or more cores never process frames from the same flow at the same time. This can also be accomplished by using hold active scheduling along with discrete consumption acknowledgment (DCA) mode associated with the DQRR. Although flow affinity may change for an FQ with hold active scheduling when the FQ is emptied, if the new work (from frames received after the FQ is emptied) is held off until all previous work completes, then the flow will not be processed by multiple cores simultaneously, thereby preserving order.

When the FQ is emptied, QMan places the FQ in hold suspended state, which means that no further work for that FQ is enqueued to any core until all previously enqueued work is completed. Because DCA mode effectively holds off the consumption notification (from the core to QMan) until the resultant processed frame is enqueued for egress, this implies processing is completely finished for any frames in flight to the core. After all the in-flight frames have been processed, QMan reschedules the FQ to the appropriate core.

NOTE

After the FQ is empty and when in hold active mode, the affinity is not likely to change. This is because the indication of “completeness” from the core currently processing the flow frees up some DQRR slots that could be used by QMan when it restarts enqueuing work for the flow. The possibility of the flow-to-core affinity changing when the FQ empties is only discussed as a worst case possibility with regards to order preservation.

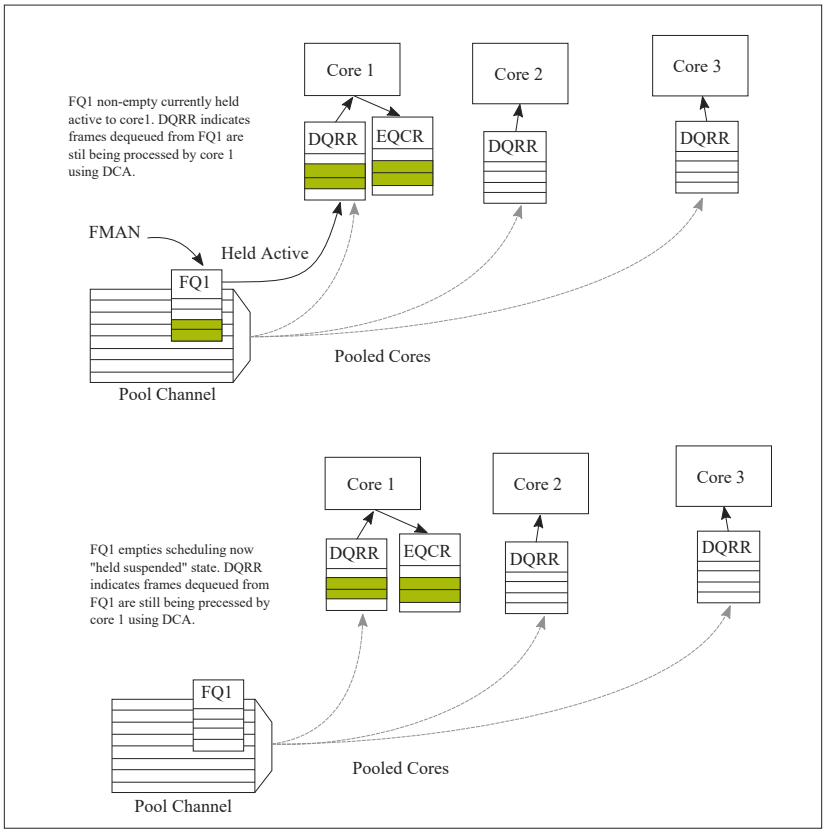

Figure 67. Hold active to held suspended mode

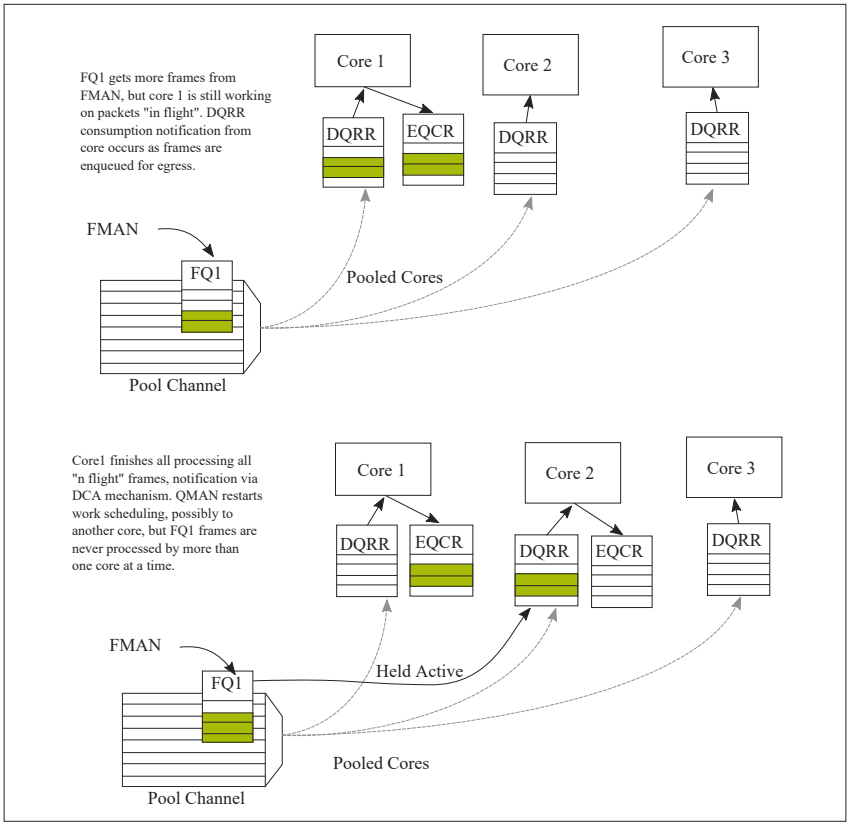

Figure 68. Held suspended to hold active mode

Congestion management

From an overall system perspective, there are multiple potential overflow conditions to consider. The maximum number of frames active in the system (the number of frames in flight) is determined by the amount of memory allocated to the Packed Frame Queue Descriptors (PQFD's). Each PQFD is 64 bytes and can identify up to three frames, so the total number of frames that can be identified by the PQFDs is equal to the amount of memory allocated for PQFD space divided by 64 bytes (per entry) multiplied by three (frames per entry).

A pool of buffers may deplete in BMan. This depends on how many buffers have been assigned by software for BMan. BMan may raise an interrupt to request more buffers when in a depleted state for a given pool; the software can manage the congestion state of the buffer pools in this manner.

In addition to these high-level system mechanisms, congestion management may also be identified specific to the FQs. A number of FQs can be grouped together to form a congestion group (up to 256 congestion groups per system for most DPAA1 SoCs). These FQs need not be on the same channel. The system may be configured to indicate congestion either by consider the aggregate number of bytes within the FQ's in the congestion group or by the aggregate number of frames within the congestion group. The frame count option is useful when attempting to manage the number of buffers in a buffer pool as they are used by a particular core or group of cores. The byte count is useful to manage the amount of system memory used by a particular core or group of cores.

When the total number of frames/bytes within the frames in the congestion group exceeds the set threshold, subsequent enqueues to any of the FQs in the group are rejected; in general, the frame is dropped. For the congestion group mechanism, the decision to reject is defined by a programmed weighted random early discard (WRED) algorithm programmed when the congestion group is defined.

In addition, a specific FQ can be set to a particular maximum allowable depth (in bytes); after the threshold is reached enqueue attempts will be rejected. This is a maximum threshold: there is no WRED algorithm for this mechanism. Note that, when the FQ threshold is not set, a specific FQ may fill until some other mechanism (because it's part of a congestion group or system PQFD depletion or BMAN depletion) prevents the FQ from getting frames. Typically, FQs within a congestion group are expected to have a maximum threshold set for each FQ in the group to ensure a single queue does not get stuck and unfairly consume the congestion group. Note that, when an FQ does not have a queue depth set and/or is not a part of a congestion group, the FQ has no maximum depth. It would be possible for a single queue to have all the frames in the system, until the PQFD space or the buffer pool is exhausted.

8.2.1.9 Application Mapping

The first step in application mapping is to determine how much processing capability is required for tasks that may be partitioned separately.

Processor core assignment

Consider a typical networking application with a set of distinct control and data plane functionality. Assigning two cores to perform control plane tasks and six cores to perform data plane tasks may be a reasonable partition in an eight-core device. When initially identifying the SoC required for the application, along with the number of cores and frequencies required, the designer makes some performance assumptions based on previous designs and/or applicable benchmark data.

Define flows

Next, define what flows will be in the system. Key considerations for flow definition include the following:

- Total number of flows expected at a given time within the system
- Desired flow-to-core affinity, ingress flow destination
- Processor load balancing
- Frame sizes (may be fixed or variable)
- Order preservation requirement
- Traffic priority relative to the flows
- Expected bandwidth requirement of specific flows or class of flows
- Desired congestion handling

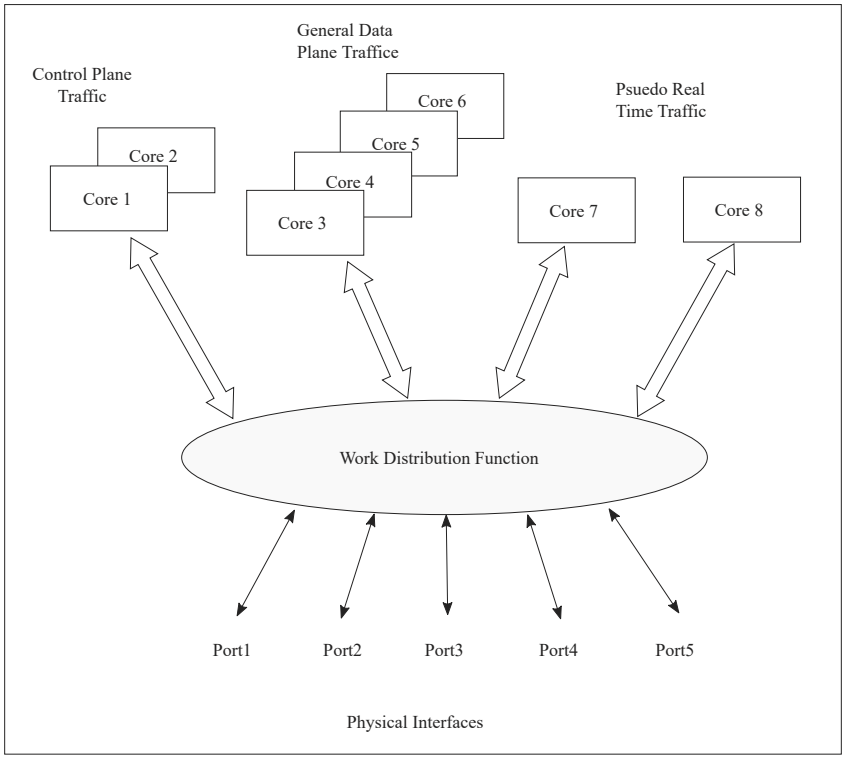

Figure 69. Example Application with Three Classes

In the figure above, two cores are dedicated to processing control plane traffic, four cores are assigned to process general data traffic and special time critical traffic is split between two other cores. In this case, assume the traffic characteristics in the following table. With this system-level definition, the designer can determine which flows are in the system and how to define the FQs needed.

Table 62. Traffic characteristics

Characteristic	Definition
Control plane traffic	• Terminated in the system and any particular packet sent has no dependency on previous or subsequent packets (no order requirement). • May occur on ports 1, 2 or 3. • Ingress control plane traffic on port three is higher priority than the other ports. • Any ICMP packet on ports 1, 2 or 3 is considered control plane traffic. • Control plane traffic makes up a small portion of the overall port bandwidth.
General data plane traffic	• May occur on ports 1, 2 or 3 and is expected to comprise the bulk of the traffic on these ports. • The function performed is done on flows and egress packets must match the order of ingress packets. • A flow is identified by the IP source address.

Table continues on the next page...

Table 62. Traffic characteristics (continued)

Characteristic	Definition
	• The system can expect up to 50 flows at a time. • All flows have the same priority and a lower priority than any control plane traffic. • It is expected that software will not always be able to keep up with this traffic and the system should drop packets after some amount of packets are within the system.
Pseudo real-time traffic	• A high amount of determinism is required by the function. • This traffic only occurs on port 4 and port 5 and is identified by a proprietary field in the header; any traffic on these ports without the proper value in this field is dropped. • All valid ingress traffic on port 4 is to be processed by core 7, ingress traffic on port 5 processed by core 8. • There are only two flows, one from port 4 to port 5 and one from port 5 to port 4, egress order must match ingress order. • The traffic on these flows are the highest priority.

Identify ingress and egress frame queues (FQs)

For many applications, because the ingress flow has more implications for processing, it is easier to consider ingress flows first. In the example above, the control plane and pseudo real-time traffic FQ definitions are fairly straightforward. For the control plane ingress, one FQ for lower priority traffic on ports 1 and 2 and one for the higher priority traffic would work. Note that two ports can share the same queue on ingress when it does not matter for which core the traffic is destined. For ingress pseudo real-time traffic, there is one FQ on port 4 and one FQ on port 5.

The general data plane ingress traffic is more complicated. Multiple options exist which maintain the required ordering for this traffic. While this traffic would certainly benefit from some of the control features of the QMan (cache warming, and so on), it is best to have one FQ per flow. Per the example, the flow is identified by the IP source (32-bits), which consists of too many bits to directly use as the FQID. The hash algorithm can be used to reduce the 32-bits to a smaller number; in this case, six bits would generate 64 queues, which is more than the anticipated maximum flows at a given time. However, this is not significantly more than maximum flow expected, so more FQs can be defined to reduce hash collisions. Note that, in this case, a hash collision implies that two flows are assigned to the same FQ. As the ingress FQs fill directly from the port, the packet order is still maintained when there is a collision (two flows into one FQ). However, having two flows in the same FQ tends to minimize the impact of cache warming. There may be other possibilities to refine the definition of flows to ensure a one-to-one mapping of flows to FQs (for example, concatenating other fields in the frame) but for this example assume that an 8 bit hash (256 FQs) minimizes the likelihood of two flows in the FQ to an acceptable level.

Consider the case in which, on ingress, there is traffic that does not match any of the intended flow definitions. The design can handle these by placing unidentifiable packets into a separate garbage FQ or by simply having the FMan discard the packets.

On egress control traffic, because the traffic may go out on three different ports, three FQs are required. For the egress pseudo real-time traffic, there is one queue for each port as well.

For the egress data plane traffic, there are multiple options. When the flows are pinned to a specific core, it might be possible to simply have one queue per port. In this case, the cores would effectively be maintaining order. However, for this example, assume that the system uses the order definition/order restoration mechanism previously described. In this case, the system needs to define an FQ for each egress flow. Note that, since software is managing this, there is no need for any sort of hash algorithm to spread the traffic; the cores will enqueue to the FQ associated with the flow. When there are no more than 50 flows in the system at one time, and number of egress flows per port is unknown, the system could define 50 FQs for each port when DPAA1 is initialized.

Define PCD configuration for ingress FQs

This step involves defining how the FMan splits the incoming port traffic into the FQs. In general, this is accomplished using the PCD (Parse, Classify, Distribute) function and results in specific traffic assigned to a specific FQID. Fields in the incoming packet may be used to identify and split the traffic as required. For this key optimization case, the user must determine the correct field. The example is as follows:

- For the ingress control traffic, the ICMP protocol identifier is the selector or key. If the traffic is from ports 1 or 2 then that traffic goes to one FQID. If it is from port 3, the traffic goes to a different FQID because this needs to be separated and given a higher priority than the other two ports.
- For the ingress data plane traffic, the IP source field is used to determine the FQID. The PCD is then configured to hash the IP source to 8 bits, which will generate 256 possible FQs. Note that this is the same, regardless of whether the packet came from ports 1, 2, or 3.
- For the ingress pseudo real-time traffic, the PCD is configured to check for the proprietary identifier. If there is a match then the traffic goes to an FQID based on the ingress port. If there is no match then the incoming packet is discarded. Also, the soft parser needs to be configured/programmed to locate the proprietary identifier.

Note that the FQID number itself can be anything (within the 24 bits to define the FQ). To maintain meaning, use a numbering scheme to help identify the type of traffic. For the example, define the following ingress FQIDs:

- High priority control: FQID `0x100`
- Low priority control: FQID `0x200`
- General data plane: FQID `0x1000 – 0x10FF`
- Pseudo real-time traffic: FQID `0x2000` (port 4), FQID `0x2100` (port 5)

The specifics for configuring the PCDs are described in the **DPAA1 Reference Manual** and in the Software Developer Kit (SDK) used to develop the software.

8.2.1.10 FQ/WQ/Channel

For each class of traffic in the system, the FQs must be defined together with both the channel and the WQ to which they are associated. The channel association affines to a specific processor core while the WQ determines priority.

Consider the following by class of traffic:

- The control traffic goes to a pool of two cores with priority given to traffic on port 3.
- The general data plane traffic goes to a pool of 4 cores.
- The pseudo real-time traffic goes to two separate cores as a dedicated channel.

Note that, when the FQ is defined, in addition to the channel association, other parameters may be configured. In the application example, the FQs from 1000 to 10FF are all assigned to the same congestion group; this is done when the FQ is initialized. Also, for these FQs it is desirable to limit the individual FQ length; this would also be configured when the FQ is initialized.

Because the example application is going to use order definition/order restoration mode, this setting needs to be configured for each FQ in the general data plane traffic (FQID 0x1000-0x10FF). Note that order is not required for the control plane traffic and that order is preserved in the pseudo real-time traffic because the ingress traffic flows are mapped to specific cores.

QMan configuration considerations include the congestion management and pool channel scheduling. A congestion group must be defined as part of QMan initialization. (Note that the FQ initialization is where the FQ is bound to a congestion group.) This is where the total number of frames and the discard policy of the congestion group are defined. Also, consider the QMan scheduling for pool channels. In this case, the default of temporarily attaching an FQ to a core until the FQ is empty will likely work best. This tends to keep the caches current, especially for the general data plane traffic on cores 3-6.

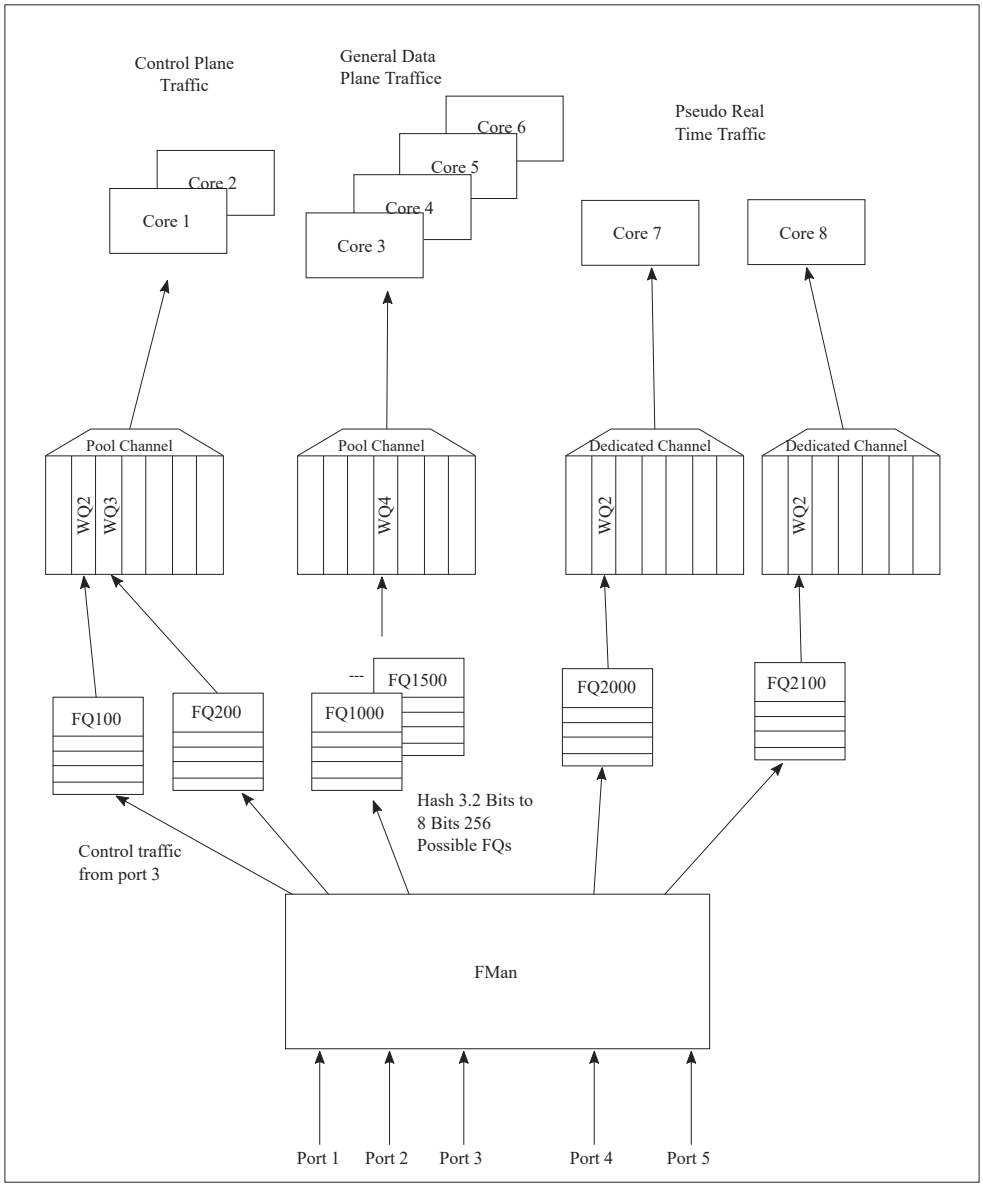

Figure 70. Ingress application map

Define egress FQ/WQ/channel configuration

For egress, the packets still flow through the system using DPAA1, but the considerations are somewhat different. Note that each external port has its own dedicated channel; therefore, to send traffic out of a specific port, the cores enqueue a frame to an FQ associated with the dedicated channel for that port. Depending on the priority level required, the FQ is associated with a specific work queue.

For the example, the egress configuration is as follows:

- For control plane traffic, there needs to be separate queues for each port this traffic may use. These FQs must be assigned to a WQ that is higher in priority then the WQ used for the data plane traffic. The example shown includes a strict priority (over the data plane traffic) for ports 1 and 2 with the possibility of WRED with the data plane traffic on port 3.

- Because the example assumes that the order restoration facility in the FQs will be utilized, there must be one egress FQ for each flow. The initial system assumptions are for up to 50 flows of this type; however, the division by port is unknown, the FQs can be assigned so that there are at least 50 for each port. Note that FQs can be added when the flow is discovered or they can be defined at system initialization time.
- For the pseudo real-time traffic, per the initial assumptions, core 7 sends traffic out of port 4 and core 8 sends traffic out of port 5. As the flows are per core, the order is preserved because of this mapping. These are assigned to WQ2, which allows definition for even higher priority traffic (to WQ1) or lower priority traffic for future definition on these ports.

As stated before, the FQIDs can be whatever the user desires and should be selected to help keep track of what type of traffic the FQ's are associated. For this example:

- Control traffic for ports 1, 2, 3 are FQID 300, 400, 500 respectively.
- Data plane traffic for ports 1, 2, 3 are FQID 3000-303F, 4000-403F, and 5000-503F respectively, this provides for 64 FQ's per port on egress.
- The pseudo real-time traffic uses FQID 6000 for port 4 and 7000 for port 5.

Because this application makes use of the order restoration feature, an order restoration point must be defined for each data plane traffic flow. Also, congestion management on the FQs may be desirable. Consider that the data plane traffic may come in on multiple ports but may potentially be consolidated such that is egresses out a single port. In this case, more traffic may be attempted to be enqueued to a port than the port interface rate may allow, which may cause congestion. To manage this possibility, three congestion groups can be defined each containing all the FQs on each of the three ports that may have the control plus data plane traffic. As previously discussed, it may be desirable to set the length of the individual FQs to further manage this potential congestion.

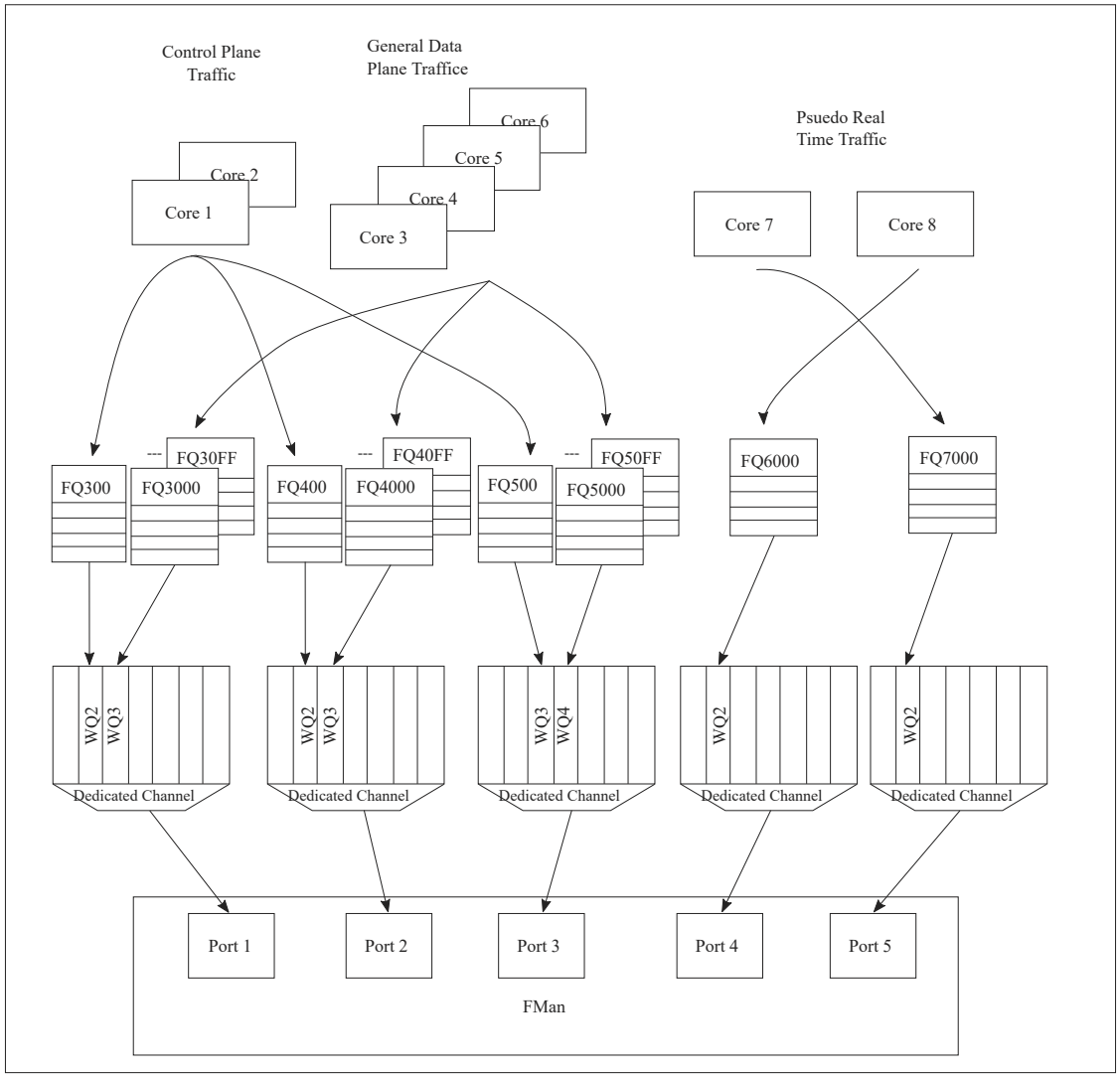

Figure 71. Egress application map

End of Document

8.2.2 Linux Ethernet

8.2.2.1 Introduction

An overview of the DPAA 1.x Ethernet network driver, in the more generic context of Linux device drivers.

The primary concepts of the DPAA 1.x Ethernet driver architecture are presented in the following sections without going into too much details as code structure. These pages are not a Linux Device Drivers tutorial, but a quick start guide which provides context for users.

The following sections describe the Linux Ethernet driver running on Datapath Acceleration Architecture (DPAA 1.x) processors. The driver is shipped with the standard QorIQ Layerscape SDK. The focus is on the theory and operation behind using Ethernet.

It provides a limited discussion of the BMan, QMan, and FMan, describing the layer of software which allows all of these to interoperate. Enablement, configuration and debugging for the DPAA 1.x Ethernet Driver is also described.

Purpose

The DPAA 1.x Ethernet Driver is meant to configure the Datapath hardware for communication via the Ethernet protocol. This includes assisting in:

- Allocating buffer pools and buffers
- Allocating frame queues
- Assigning frame queues and buffer pools to specified FMan ports
- Transferring packets between frame queues and the Linux stack
- Controlling Link Management features

Overview

Ethernet features are enabled on DPAA 1.x hardware by interconnecting the BMan, QMan, and FMan. The primary interactions are between the Linux Kernel and the QMan. Ethernet frames are exchanged between the Ethernet driver and the hardware Frame Queues via QMan Portals.

Usually, the Frame Queues are connected to an ingress or egress FMan port. Each FMan port has at least two queues assigned to it: a default queue and an error queue. This assignment can be specified in the device tree, or created dynamically by the driver on initialization.

Ethernet frames are often stored in buffers acquired from a BMan Buffer Pool. The driver sets up this pool, and either seeds it with buffers, or maps the buffers which are put into the pool. Depending on the use case, the buffers may be allocated and freed by the Kernel during network activity, or they may be allocated once and recycled by returning to the pool when not in use by the DPAA 1.x hardware.

DPAA 1.x Ethernet Driver types

The complexity of DPAA 1.x allows a variety of possible use cases. Although speed is the key factor for performance in most use cases, customization or community support are preferred in others. Building a single Ethernet driver to address all requests proved difficult without making compromises. Instead, we developed two Ethernet driver variants to approach both performance driver and community driven scenarios:

- The Private DPAA 1.x Ethernet Driver resembles the common Linux Ethernet driver. It is highly improved for performance and uses all the features that DPAA 1.x offers;
- The Upstream DPAA 1.x Ethernet Driver is integrated and maintained in the official Linux kernel tree. While younger, it benefits from streamline ease of use and community support.

Both drivers reside in the LSDK Linux kernel tree and can be built independently. The drivers can not be enabled or used at the same time. The Private Ethernet driver is enabled by default in the LSDK. Please refer to the Upstream Ethernet driver chapter for details on enabling it instead.

8.2.2.2 The DPAA1-Ethernet view of the world

This section presents the primary concepts behind the DPAA1-Ethernet driver design.

As a Linux driver, one of DPAA1-Ethernet driver's main goals is proper integration with the Linux kernel ecosystem. As a hardware device driver, the DPAA1-Ethernet driver integrates functions of several DPAA1 IP blocks, within the scope of the defined/supported use cases.

8.2.2.2.1 The Linux kernel APIs

The DPAA1-Ethernet drivers interface with the Linux kernel via the latter’s networking stack APIs. This is a strong requirement, mandated by the integration with the Linux kernel.

Another type of interaction with the kernel code is at boot time, via the Open-Firmware API. That API is used to parse the Arm platform device tree and discover the hardware modules that need to be configured. In particular, the DPAA1-Ethernet driver uses the platform device tree to discover:

- What net devices to probe and what type of hardware is underlying those devices;
- Which DPAA1 resources are involved; FQIDs, BPIDs, CGRIDs, FMan port IDs.

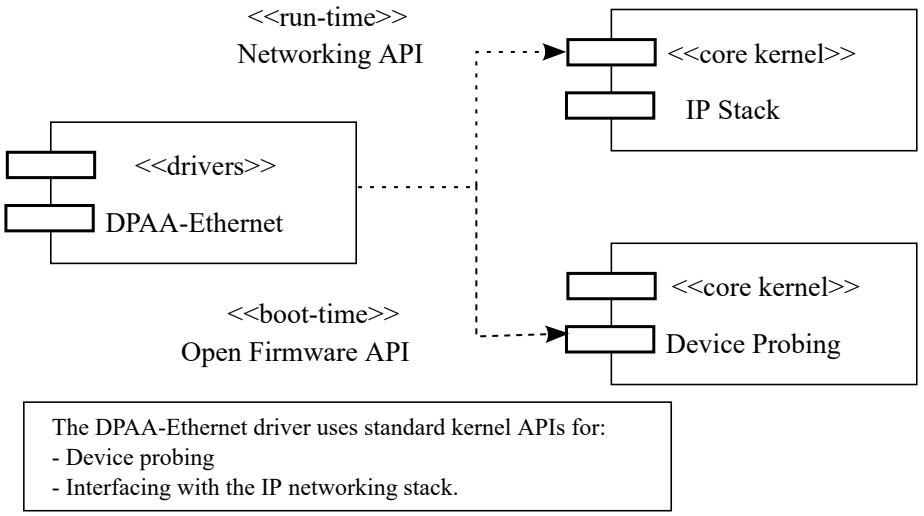

Figure 72. Platform device tree

Generally, we prefer driver configurations to be dynamic and transparent to the rest of the system. Among the benefits of dynamic resource allocations, we count:

- Portability of the drivers across multiple QorIQ platforms
- Seamless support of platform changes (For example, via booting with different RCWs)
- Seamless support of multiple partitions under the control of a hypervisor
- Cohabitation with other DPAA1 drivers (For example, a SEC driver) in the Layerscape SDK

8.2.2.2.2 The Driver's building blocks

This section presents the main structures and data entities with which the DPAA1-Ethernet driver operates.

The driver's building blocks are the relating components of the main entities with which it interacts, which are:

- The kernel’s IP stack
- The DPAA1 hardware blocks and their drivers

8.2.2.2.2.1 Net Devices

A net device (`struct net_device` in C representation) is the fundamental structure of any Linux network device driver.

A net device describes a (physical or virtual) device capable of sending and receiving packets over a (virtual or physical) network. All incoming and outgoing traffic is accounted and processed on behalf of the net device it comes or goes on.

Each supported type of net device has its own kernel driver. If there are several such devices present in a system, there will be as many device driver instances.

A net device is accessible to the Linux user via the standard tools, such as ‘ifconfig’ or ‘ethtool’.

Not all net devices have real underlying hardware; tunnel endpoints, for examples, are represented by net devices but are not directly backed by hardware. Same holds for drivers such as “bonding” or “dummy”.

It is worth emphasizing, however, that **every** Linux interface is represented by a net device. This is a fundamental design aspect of all Linux networking drivers, including DPAA1-Ethernet. One can describe the Linux IP stack as being a **netdev-centric** construction. Nearly all of the kernel networking APIs receive a `struct net_device` as a parameter. The `net_device` structure is the handle through which the driver and the network stack communicate.

The following diagram illustrates what has just been described:

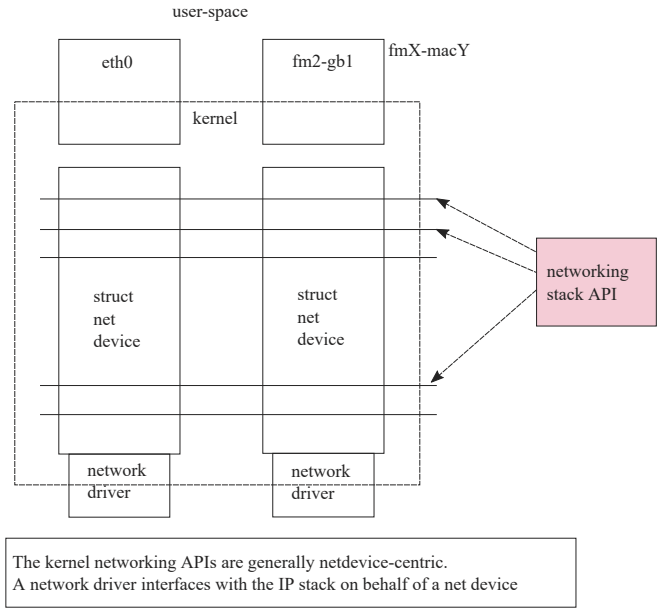

Figure 73. Every Linux Interface is Represented by a Net Device

8.2.2.2.2.2 Frame Queues

The Frame Queue is one of the fundamental concepts of DPAA1. In the case of DPAA1-Ethernet, it is the main interface between the network driver and the hardware blocks.

Ingress frames received by the DPAA1-Ethernet driver on one of the Frame Queues it is servicing are sent to the IP stack on behalf of the net device structure that the driver is associated with. Conversely, outgoing frames coming from the IP stack into the driver are enqueued to one of the egress Frame Queues.

8.2.2.2.2.3 Buffer Pools

Buffer pool configuration is another fundamental part of the DPAA1-Ethernet driver design.

Unlike the Frame Queue utilization – which is more flexible – the Buffer Pool utilization is conditioned by several design assumptions:

- The source and ownership of the ingress frame buffers are presumed by the DPAA1-Ethernet driver.

  For instance, the driver seeds the Buffer Pools at predefined checkpoints on the Rx path. There are also buffer utilization counters maintained by the driver, which influence the buffer allocation logic.
- The layout of incoming frames is also presumed by the driver. The actual buffer layout is outside the scope of this document and should not be assumed upon by driver users.

8.2.2.3 DPAA1 resources initialization

The rationale behind the “what”s, “why”s and “how”s of DPAA1 resource initializations made by the DPAA1-Ethernet driver are presented. This description does not go into the full detail of driver configuration.

8.2.2.3.1 What, Why and How resources are initialized

Following are the DPAA1 resources initialized by the various configurations of the DPAA1-Ethernet driver.

- FQs and FQIDs (where static config applies)
- BPs and BPIDs (where static config applies)
- Buffers (not quite “DPAA1” resources, rather “system” resources)
- CGRs (CGRIDs are always dynamic)
- FMan’s online ports (Note that the offline ports are configured by a different driver than DPAA1-Ethernet)

Frame Queues and Buffer Pools have been covered at length in the previous sections. CGRs are of lesser interest from the initialization viewpoint.

FMan online ports are initially probed by the FMan Driver (FMD) and later in the boot process, they are configured by the DPAA1-Ethernet driver instances according to the specifications in the `.dts`.

8.2.2.3.2 Private Ethernet driver: Hashing/PCD frame queues

Among the frame queues initialized by the DPAA1-Ethernet driver, there is a predefined set of 128 core-affined Rx FQs, automatically initialized by the driver. They are there because most performance-enhanced setups must use a PCD configuration; to that end, the standard Layerscape SDK provides a “hashing PCDs” configuration that can be applied by the user via the FMC tool. Since FMC does not support dynamic FQID specification in its .xml configuration files, the “hashing PCD” Frame Queues also have static, hard-coded FQIDs.

Furthermore, apart from the core-affined Rx FQs, there is another set of 128 core-affined Rx FQs, which have a higher priority than the former. They are named throughout this documentation "Rx PCD High Priority Frame Queues". Likewise, the queues in this set are also core-affined and have static, hard-coded FQIDs.

For details about the “hashing PCD” Frame Queues and the Rx PCD High Priority Frame Queues, refer to the Core Affined Queues section.

8.2.2.4 The (Simplified) Life of a packet

The following sections present a packet’s lifecycle in the DPAA1-Ethernet driver.

8.2.2.4.1 Private net device: Tx

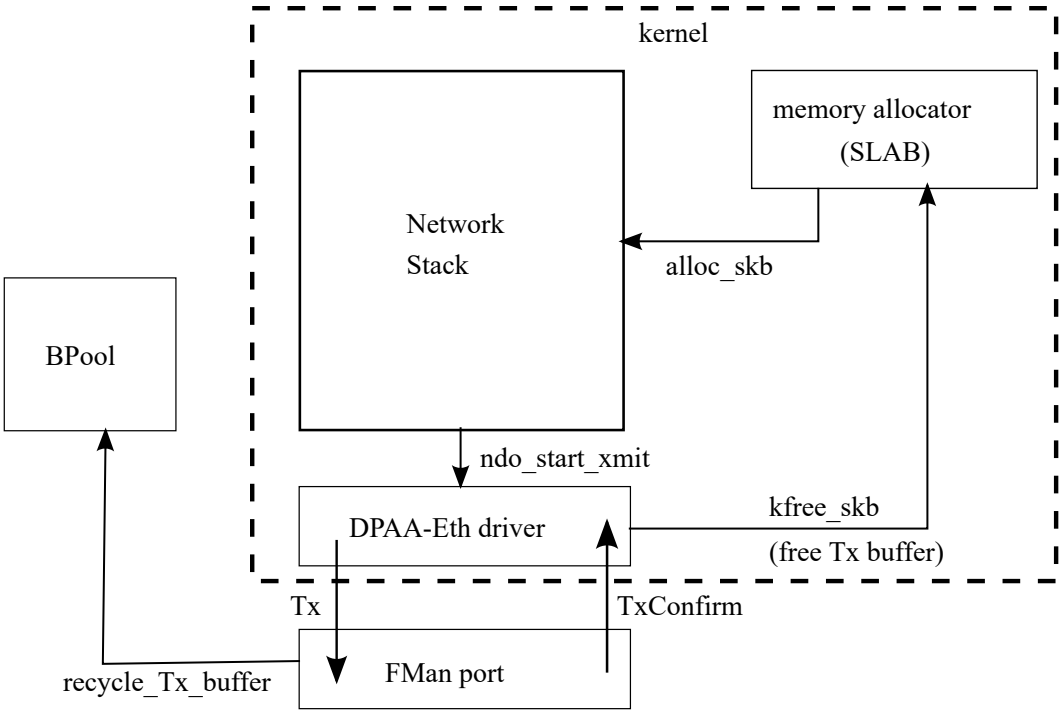

Figure 74. Buffers on the egress path

Arrows in the above diagram represent the direction of the buffer/packet flow.

A packet on the egress path is allocated by the network stack using the kernel's standard memory allocator. The DPAA1-Ethernet driver enqueues the packet to the FMan port with an indication to recycle the buffer if possible. If recycling is not possible, the DPAA1-Ethernet driver itself frees the buffer memory back to the kernel's allocator, when Tx delivery is confirmed by FMan.

8.2.2.4.2 Private net device: Rx

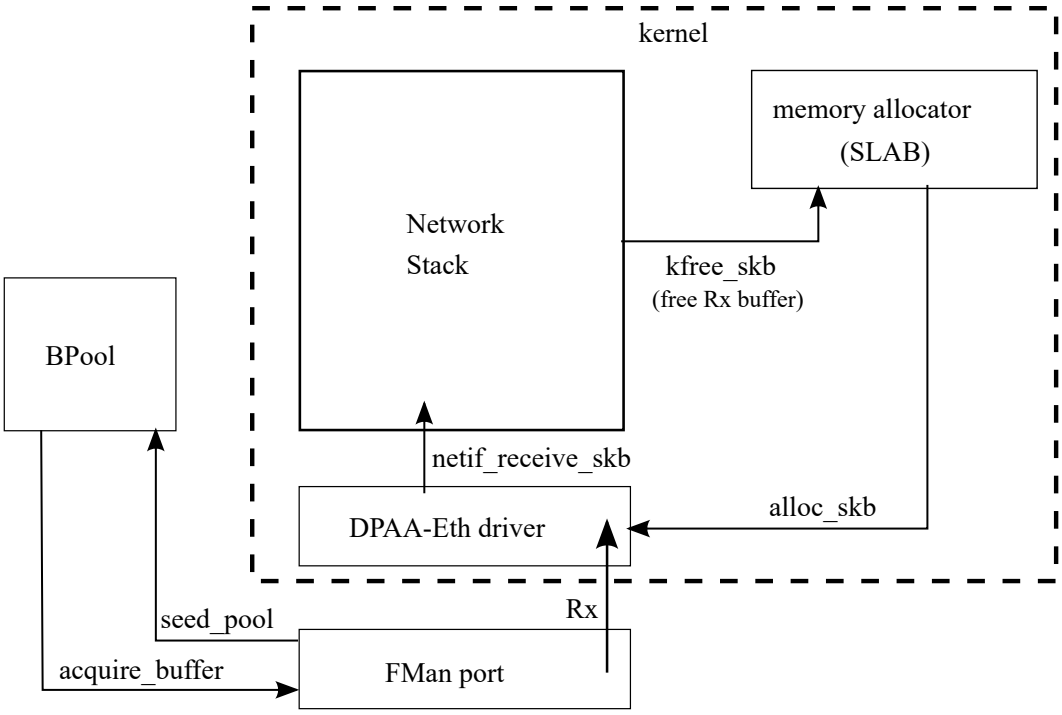

Figure 75. Buffers on the ingress path

Buffers on the ingress path are acquired by FMan directly from a Buffer Pool which was seeded by the DPAA1-Ethernet driver. Buffer layout is important to the driver, which assumes ownership on the BP. Arrows in the above diagram represent the direction of the buffer/packet flow.

8.2.2.5 Private Ethernet Driver

The Private DPAA 1.x Ethernet driver manages the network interfaces which are fully owned by the Linux partition who runs them. Therefore, it is possible to take advantage of the DPAA 1.x facilities in order to increase the performance in both termination and forwarding scenarios.

The Private DPAA 1.x Ethernet driver will be further referenced as the Private driver.

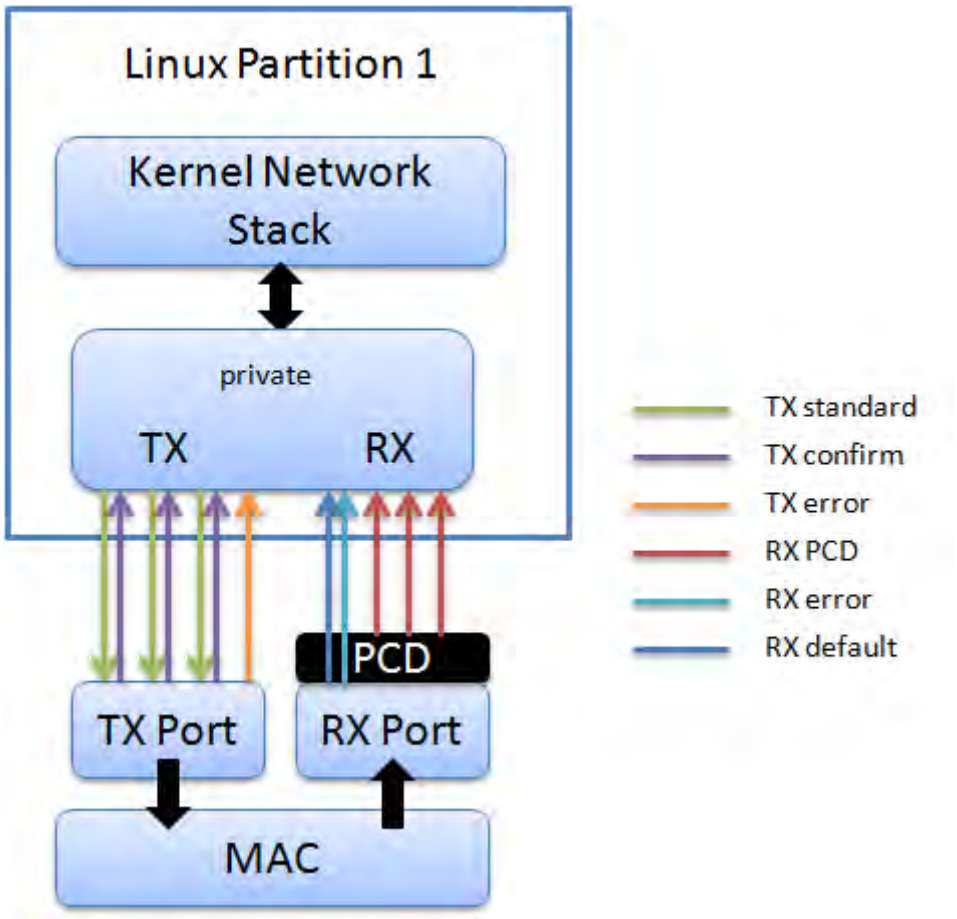

8.2.2.5.1 Network driver

The main characteristics of the private driver are:

- The private driver is a multiqueue driver - it uses 1 TX queue per CPU
- All private interfaces use a single BPID - usually dynamically allocated
- The FQIDs for the common types of queues - RX, TX, RX Error, TX Error, TX Confirm - are dynamically allocated
- The Hashing/PCD frame queues are hardcoded in the device tree. The private driver imports the PCD frame queue configuration from the device tree at startup
- The above resources are allocated and visible only to the private driver

All network traffic takes place between the Linux kernel and the physical FMan port private to that partition.

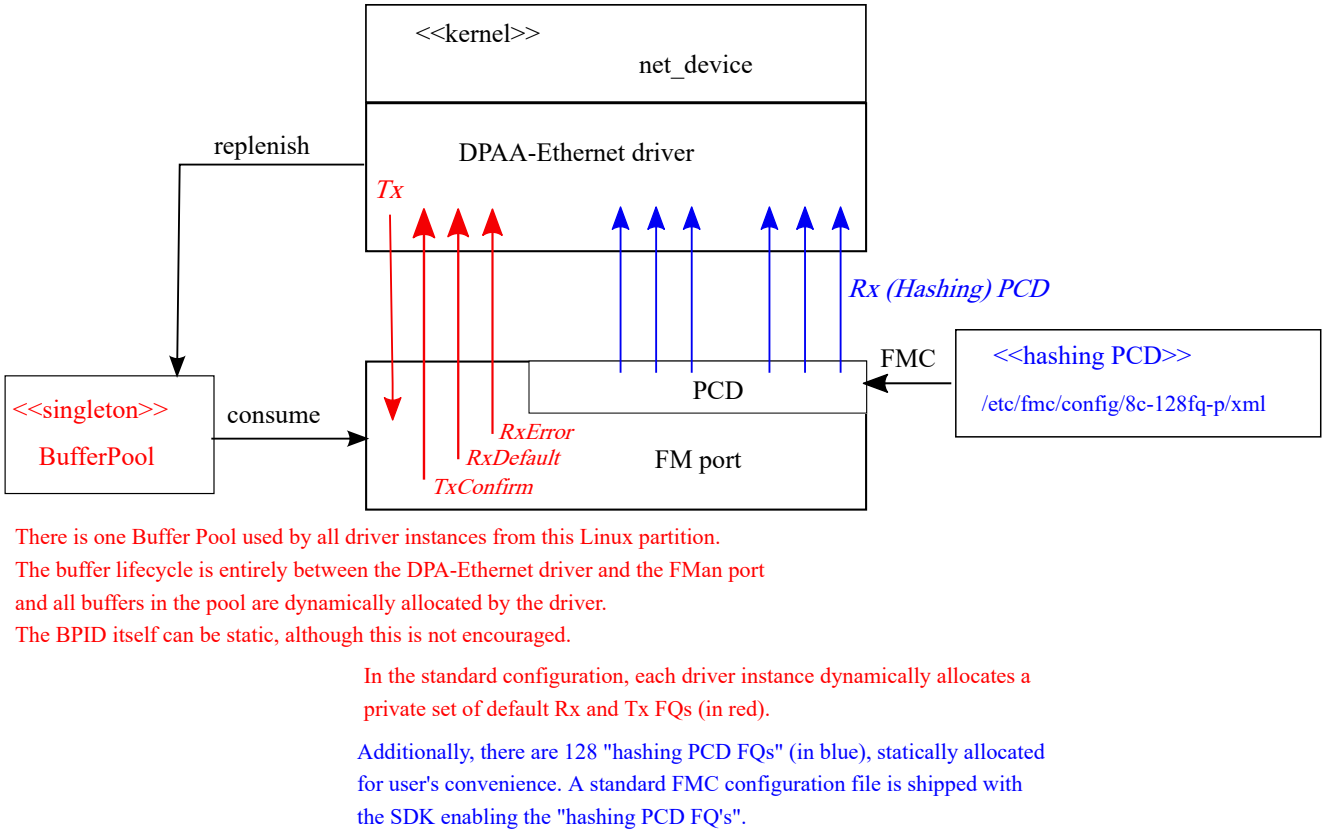

Figure 76. Network traffic between the Linux kernel and the physical FMan port

8.2.2.5.2 Configuration

This section presents the configuration options for the Private DPAA1 ethernet driver.

8.2.2.5.2.1 Device tree configuration

The compatible string used to define a private interface in device tree is "fsl,dpa-ethernet". The default structure for the device tree node that specifies a private interface should be similar to the below snippet of a LS1043ARDB device tree node:

```
ethernet@0 {
    compatible = "fsl,dpa-ethernet";
    fsl,fman-mac = <&enet0>;
};
```

“fsl,fman-mac” is the reference to the MAC device connected to this interface. This property is used to determine which RX and TX ports are connected to this interface.

Buffer pools

A single buffer pool is currently defined and used by all the private interfaces. The buffer pool ID is dynamically allocated and provided by the buffer manager. The number and size of the buffers in the pool are decided internally by the private driver therefore no device tree configuration is accepted.

Frame queues

The frame queues are allocated by the private driver with IDs dynamically allocated and provided by the queue manager. The frame queues can also be statically defined using two additional device tree properties.

```
ethernet@0 {
        compatible = "fsl,dpa-ethernet";
        fsl,fman-mac = <&enet0>;
        fsl,qman-frame-queues-rx = <0x100 1 0x101 1 0x180 128>;
        fsl,qman-frame-queues-tx = <0x200 1 0x201 1 0x300 8>;
};
```

Within the example above, a value of 0x100 was assigned to the RX error frame queue ID and 0x101 to the RX default frame queue ID. In addition, 128 PCD frame queues raging between 0x180-0x1ff are defined and assigned to the core-affined portals in a round-robin fashion.

There is exactly one RX error and one RX default queue hence a value of "1" for the frame count. Optionally, one can specify a value of "0" for the base to instruct the driver to dynamically allocate the frame queue IDs.

Within the example above, a value of 0x200 was assigned to the TX error queue ID and 0x201 to the TX confirmation queue ID. The third entry specifies the queues used for transmission.

If the qman-frame-queues-rx and qman-frame-queues-tx are not present in the device tree, the number of dynamically allocated TX queues is equal to the number of cores available in the partition.

8.2.2.5.2.2 Kconfig options

The private driver has a number of parameters which can be tuned at compile time from menuconfig. These can be found in:

```
Device Drivers
    +- Network device support
        +- Ethernet driver support
            +- Freescale devices
                +- DPAA Ethernet
```

FSL_DPAA_ETH_JUMBO_FRAME - "Optimize for jumbo frames"

Optimizes the DPAA1 ethernet driver throughput for large frames termination traffic (For example, 4K and above).

Using this option in combination with small frames increases significantly the driver's memory footprint and may even deplete the system memory. Also, the skb truesize is altered and messages from the stack that warn against this are bypassed.

FSL_DPAA_1588 - "IEEE 1588-compliant timestamping"

Enables IEEE1588 support code.

FSL_DPAA_TS - "Linux compliant timestamping"

Enables Linux API compliant timestamping support.

FSL_DPAA_CEETM - "DPAA1 CEETM QoS"

Enables QoS offloading support through the CEETM hardware block.

FSL_DPAA_CEETM_CCS_THRESHOLD_1G - "CEETM egress congestion threshold on 1G ports"

The size in bytes of the CEETM egress Class Congestion State threshold on 1G ports. The threshold needs to be configured keeping in mind the following factors:

- A threshold too large will buffer frames for a long time in the TX queues, when a small shaping rate is configured. This will cause buffer pool depletion or out of memory errors. This in turn will cause frame loss on RX.
- A threshold too small will cause unnecessary frame loss by entering congestion too often.

FSL_DPAA_CEETM_CCS_THRESHOLD_10G - "CEETM egress congestion threshold on 10G ports"

The size in bytes of the CEETM egress Class Congestion State threshold on 10G ports.

FSL_DPAA_ETH_USE_NDO_SELECT_QUEUE - "Use driver's Tx queue selection mechanism"

The DPAA1-Ethernet driver defines a ndo_select_queue() callback for optimal selection of the egress FQ. That will override the XPS support for this netdevice. If you want to be in control of the egress FQ-to-CPU selection and mapping, or do not want to use the driver's ndo_select_queue() callback, then unselect this and use the standard XPS support instead.

FSL_DPAA_ETH_MAX_BUF_COUNT - "Maximum number of buffers in private bpool"

Defaults to 128. The maximum number of buffers to be by default allocated in the DPAA1-Ethernet private port's buffer pool. One need not normally modify this, as it has probably been tuned for performance already. This cannot be lower than DPAA_ETH_REFILL_THRESHOLD.

FSL_DPAA_ETH_REFILL_THRESHOLD - "Private bpool refill threshold"

Defaults to 128. The maximum number of buffers to be by default allocated in the DPAA1-Ethernet private port's buffer pool. One need not normally modify this, as it has probably been tuned for performance already. This cannot be lower than DPAA_ETH_REFILL_THRESHOLD.

FSL_DPAA_CS_THRESHOLD_1G - "Egress congestion threshold on 1G ports"

The size in bytes of the egress Congestion State notification threshold on 1G ports. Ranges from 0x1000 to 0x10000000. Defaults to 0x06000000. This option can help when:

- The device stays congested for a prolonged time (risking the netdev watchdog to fire - see also the tx_timeout module param)
- Preventing the Tx cores from tightly-looping (as if the congestion threshold was too low to be effective)

This might also implies some risks:

- Affecting performance of protocols such as TCP, which otherwise behave well under the congestion notification mechanism
- Running out of memory if the CS threshold is set too high

FSL_DPAA_CS_THRESHOLD_10G - "Egress congestion threshold on 10G ports"

The size in bytes of the egress Congestion State notification threshold on 10G ports. Ranges from 0x1000 to 0x20000000. Defaults to 0x10000000.

FSL_DPAA_INGRESS_CS_THRESHOLD - "Ingress congestion threshold on FMan ports"

The size in bytes of the ingress tail-drop threshold on FMan ports. Defaults to 0x10000000. Traffic piling up above this value will be rejected by QMan and discarded by FMan.

FSL_DPAA_ETH_DEBUG - "DPAA1 ethernet debug support"

This option compiles debug code for the DPAA1 Ethernet driver.

8.2.2.5.2.3 Bootargs

The following bootarg parameters are defined for the Frame Manager driver. However, they also influence the behavior of the Private driver:

- fsl_fm_max_frm
- fsl_fm_rx_extra_headroom

fsl_fm_max_frm

The Frame Manager discards both Rx and Tx frames that are larger than a specific Layer2 MAXFRM value. The DPAA1 Ethernet driver won't allow one to set an interface’s MTU too high such that it would produce Ethernet frames larger than MAXFRM. The maximum value one can use as the MTU for any interface is (MAXFRM - 22) bytes, where 22 is the size of an Eth+VLAN header (18 bytes), plus the Layer2 FCS (4 bytes).

Currently, the value of MAXFRM is set at boot time and cannot be changed without rebooting the system.

The default MAXFRM is 1522, allowing for MTUs up to 1500. If a larger MTU is desired, one would have to reboot and reconfigure the system as described next. The maximum MAXFRM is 9600.

The MAXFRM can be set in the following two ways.

- As a Kconfig option (CONFIG_FSL_FM_MAX_FRAME_SIZE):

```
Device Drivers
+-> Network device support
  +-> Ethernet driver support
    +-> Freescale devices
       +-> Frame Manager support
          +-> Freescale Frame Manager (datapath) support
            +-> Maximum L2 frame size
```

- As a bootarg: In the U-Boot environment, add "fsl_fm_max_frm=<your_MAXFRM>" directly to the "bootargs" variable.

Note that any value set directly in the kernel bootargs will override the Kconfig default. If not explicitly set in the bootargs, the Kconfig value will be used.

Symptoms of misconfigured MAXFRM

MAXFRM directly influences the partitioning of FMan's internal MURAM among the available Ethernet ports, because it determines the value of an FMan internal parameter called FIFO Size. Depending on the value of MAXFRM and the number of ports being probed, some of these may not be probed because there is not enough MURAM for all of them. In such cases, one will see an error message in the boot console.

fsl_fm_rx_extra_headroom

Configure this to communicate the Frame Manager to reserve some extra space at the beginning of a data buffer on the receive path, before Internal Context fields are copied. This is in addition to the private data area already reserved for driver internal use. The option does not affect in any way the layout of transmitted buffers. The default value (64 bytes) offers best performance for the case when forwarded frames are being encapsulated (For example, IPSec).

The RX extra headroom can be set in the following two ways.

- As a Kconfig option (CONFIG_FSL_FM_RX_EXTRA_HEADROOM):

```
Device Drivers
+-> Network device support
  +-> Ethernet driver support
    +-> Freescale devices
      +-> Frame Manager support
        +-> Freescale Frame Manager (datapath) support
          +-> Add extra headroom at beginning of data buffers
```

- As a bootarg: in the U-Boot environment, add "fsl_fm_rx_extra_headroom=< your_rx_extra_headroom>" directly to the "bootargs" variable.

8.2.2.5.2.4 ethtool options

The private driver implements the following ethtool operations.

```
-a --show-pause
    Queries the specified Ethernet device for pause parameter information.
-A --pause
    Changes the pause parameters of the specified private devices.
    rx on|off
        Specifies whether RX pause should be enabled.
    tx on|off
        Specifies whether TX pause should be enabled.
```

```
-k --show-features
    Lists the offloadable DPAA driver features. Specifies which features can be changed.
-K --features
    Changes a driver feature.
    feature on|off
        Specifies weather a certain feature should be enabled.
-s --change
    msglvl N
    msglvl type on|off ...
        Sets the driver message type flags by name or number. type names the type of message to
enable or disable; N  specifies  the new flags numerically.
-S --statistics
    Shows driver statistics and counters: interrupt counter, packet counters, error counters,
congestion state, and more.
--show-eee
    Shows the Energy-Efficient Ethernet configurations.
--set-eee
    Configures the EEE behavior.
```

8.2.2.5.3 Features

This section present the private DPAA1 ethernet driver features.

8.2.2.5.3.1 Congestion management

QMan offers the following three methods of managing congestion.

- WRED
- Congestion State Tail Drop (CSTD)
- FQ Tail Drop (FQTD)

The Private driver implements CSTD both on TX and RX. When the number of bytes residing in a TX FQ congestion group reaches a congestion threshold (high watermark), the QMan rejects any further incoming frames, until the sum of all the frames contained in the congestion groups drops under a low watermark, which is 7/8 of the high watermark. The high watermark can be configured from menuconfig. For more details, see section Kconfig options.

8.2.2.5.3.2 Scatter/Gather support

On the Rx path, the first S/G entry is used to build the skb linear part and the other entries are used as fragments.

The Private driver can access the egress skbufs allocated in high memory (For example, mapped directly from user-space, as is the case of the sendfile() system call). This eliminates the kernel need to copy such skbufs into newly-allocated low memory buffers, allowing zero-copy on the egress path.

8.2.2.5.3.3 Jumbo frames support

Termination traffic with large frames performs better if only linear skbs (and single buffer frames) are used. The driver has the option to allocate Rx buffers large enough to accommodate the entire frame (of max 9.6K).

This option needs to be used with caution, as the memory footprint can be a real problem when small frames are used.

The option can be enabled from the menuconfig option:

```
Device Drivers
    +-> Network device support
        +-> Ethernet driver support
            +-> Freescale devices
```

```
                +-> DPAA Ethernet
                    +-> Optimize for jumbo frames
```

In addition to enabling this feature from menuconfig, the user is required to set the L2 maximum frame size to 9600, otherwise the configuration is not valid. This can be achieved by either setting fsl_fm_max_frm=9600 in the bootargs, or configuring CONFIG_FSL_FM_MAX_FRAME_SIZE from menuconfig. For more details, see Bootargs.

8.2.2.5.3.4 GRO/GSO Support

Generic Receive Offload (GRO) is tied to NAPI support and works by keeping a list of GRO flows per each NAPI instance. These flows can then "merge" incoming packets, until some termination condition is met or the current NAPI cycle ends, at which point the flows are flushed up the protocol stack. Flows merging several packets share the protocol headers and coalesce the payload (without memcopying it). This results in a CPU load decrease and/or network throughput increase. Packets which don't match any of the stored flows (in the current NAPI cycle) are sent up the stack via the normal, non-GRO path.

GRO is commonly supported in hardware as a set of "GRO assists", rather than full packet coalescing. The following features count as GRO assists:

- RX hardware checksum validation
- Receive Traffic Distribution (RTD)
- Multiple RX/TX queues
- Receive Traffic Hashing
- Header prefetching
- Header separation
- Core affinity
- Interrupt affinity

Note: With the exception of header separation, the DPAA1 platforms feature all other hardware assists. Most notably, they are implicitly achieved through the mechanisms that accompany PCDs.

Generic Segmentation Offload (GSO) is also a well-established feature in the Linux kernel. Normally, a TCP segment is composed in the Layer 4 of the Linux stack, based on the current MSS (Maximum Segment Size) connection setting. It has been observed, though, that delaying segmentation is a better approach in terms of CPU load, because fewer headers are processed. Linux has taken an optimization approach, called GSO, whereby the L4 segments are only composed just before they are handed over to the L2 driver.

GRO and GSO support are available by default in the Private driver and can be independently switched on and off at runtime, via *ethtool -k*.

Note: Older versions of ethtool do not support this. Ethtool version 3.0 does - and possibly others before it, too.

Generic optimizations that enhance the driver's performance in the general case also apply to the GRO/GSO-enabled driver. PCD support is therefore recommended in this regard. We have found that these optimizations yield the best results on 10 Gbit/s traffic, and to a lesser extent (if any) on 1 Gbit/s traffic. TCP tests, especially, can benefit from GRO by shedding CPU load and upping the network throughput. The improvements are the more visible with smaller network MTU - with MTU=1500 and below, the benefits are higher, while starting from MTU=4k they are no longer observable.

One optimization that boosts GSO performance is the zero-copy egress path. That is available thanks to the *sendfile()* system call, which may be used instead of the plain *send()* syscall, and which certain benchmark applications know about. Netperf for instance has *sendfile* support in its *TCP_SENDFILE* tests.

GRO and GSO are no panacea, one-button-fix-all kind of optimization. While under most circumstances they should be transparent (this being why GRO is by default enabled in the Linux kernel), there are scenarios and configurations where they may in fact under-perform. Traffic on 1 Gbit/s ports sees little benefit from GRO/GSO. Also, if the Private Driver detects that PCDs are not in place, GRO is automatically by-passed.

8.2.2.5.3.5 Transmit packet steering

The Private driver exposes to the Linux networking stack a TX-multiqueue interface. This provides the stack with better control of the transmission queues and reduces the need for locking. The user may also control the mapping of egress FQs to the CPUs via a standard Linux feature called Transmit Packet Steering (XPS) and documented here: http://lwn.net/Articles/412062/

NOTE

The kernel transmission queues are different entities than the Private driver Frame Queues.

The Private driver, however, matches the two realms by mapping the DPAA1 FQs onto kernel's own queue structures. To that end, the Private driver provides a standard callback (net-device operation, or NDO) called ndo_select_queue(), which the stack can interrogate to find out the specific queue mapping it needs for transmitting a frame. The existence of that NDO (which is otherwise optional) overrides the kernel queue selection via XPS. This is why the Private driver provides a compile-time choice to disable the ndo_select_queue() callback, leaving it to the stack to choose a transmission queue.

To use the Private driver's builtin ndo_select_queue() callback, select the Kconfig option **FSL_DPAA_ETH_USE_NDO_SELECT_QUEUE**.

To disable the Private driver's queue selection mechanism and use XPS instead, unselect this Kconfig option. Further on, the users can configure their own txq-to-cpu mapping, as described in the LWN article above.

8.2.2.5.3.6 TX and RX Hardware Checksum

Introduction

The FMan block supports calculation of the L3 and/or L4 checksum for certain standard protocols.

This can be used, on the TX path, for calculating the checksum of the outgoing frame, and on the RX path, for validating the L3/L4 checksum of the incoming frame and making classification, or distribution decisions.

TX Checksum Support

On TX, the checksum computation is enabled on a per-frame basis by the Private driver. The TX checksum support for standard protocols is as follows:

Table 63. TX checksum support

Header	IPv4	IPv6	Other
IP header	yes	not available	no
TCP header	yes	yes	no
UDP header	yes	yes	no

NOTE

IP Header checksum capability also exists in SEC block (see IPSEC).

NOTE

Ethernet CRC is calculated on a per frame basis during frame transmission.

NOTE

The main precondition for TX checksum to be enabled in hardware is that IP tunneling must not be present (i.e., not GRE, not MinEnc, not IPIP). Other conditions pertain to the validity and integrity of the frame.

RX Checksum Support

This feature is disabled by default. In order to enable RX checksum computation for supported protocols, a PCD scheme must be applied to the respective RX port. In the current release, L3 and L4 are both enabled if a PCD is applied.

If enabled, L3 and L4 checksum validation is performed for TCP, UDP and IPv4.

NOTE

Controlling this feature via ethtool is not yet supported.

8.2.2.5.3.7 Priority Flow Control

The DPAA1 Ethernet Driver offers experimental support for IEEE standards 802.1Qbb (Priority Flow Control) and 802.1p.

These standards aim to implement lossless Ethernet, in which the highest-priority classes of traffic benefit from maximum bandwidth and minimum delay. Up to 8 classes of service can be used, but only a minimum of 3 is required.

The terms “Class of Service (CoS)” and “priority” will be used interchangeably in this section.

Enabling PFC Support

To enable PFC support, enable the following options from menuconfig

```
Device Drivers
+ Network device support
  + Ethernet driver support
    + Freescale devices
      + Frame Manager support
        + Freescale Frame Manager (datapath) support
          + FMan PFC support (EXPERIMENTAL)
            + (3)     Number of PFC Classes of Service
            + (65535) The pause quanta for PFC CoS 0
            + (65535) The pause quanta for PFC CoS 1
            + (65535) The pause quanta for PFC CoS 2
```

The number of Classes of Service can range between 1 and 4. It defines the number of Work Queues used and the number of priorities that are set when a PFC frame is issued. 3 is the default value. Changing this value also changes the number of WQs and priorities.

The pause time can be adjusted for each CoS individually.

Enabling and disabling CoS and their pause time is unavailable at runtime. It is only possible at compile time in this release.

Selecting the Class of Service

When PFC support is enabled, the egress traffic flowing on a DPAA1 Private interface is distributed on the first 3 Work Queues of a TX port, namely WQ0, WQ1 and WQ2.

These function in strict priority. WQ0 has the highest priority and WQ2 the lowest priority. FMan cannot dequeue frames from WQ1 unless WQ0 is empty and from WQ2 unless WQ1 and WQ0 are empty.

The work queue a frame will be enqueued on is determined from the socket buffer priority. skb_prio is just an internal tag that the kernel applies to the frames on the egress path and is not visible to the receiver.

skb_prio	CoS
0	0
1	1
≥2	2

The default skb_prio is 0, which means all frames will be distributed to WQ0. skb_prio can be modified using a number of methods, including traffic control.

To edit a socket buffer's priority using tc, one needs to enable the following options from menuconfig.

```
Networking support
+ Networking options
  + QoS and/or fair queueing
    + Multi Band Priority Queueing (PRIO)
    + Elementary classification (BASIC)
    + Universal 32bit comparisons w/ hashing (U32)
    + Extended Matches
      + U32 key
    + Actions
      + SKB Editing
```

The following commands assign a skb_prio of 1 to traffic destined to TCP and UDP port 5000 and implicitly direct it on WQ1.

```
tc qdisc del dev fm1-mac9.0 root
tc qdisc add dev fm1-mac9.0 root handle 1: prio
tc filter add dev fm1-mac9.0 parent 1: protocol ip u32 match ip dport 5000 action skbedit priority 1
```

VLAN tagging

In order to be classified by the receiver according to 802.1p the egress traffic must be VLAN tagged, with the Class of Service contained in the PCP field. The PCP priority is also determined from skb_prio.

```
# create a subinterface of fm1-mac9, with VLAN ID 0
vconfig add fm1-mac9 0
# all frames tagged with skb_prio 1, will have PCP priority of 1.
vconfig set_egress_map fm1-mac9.0 1 1
```

If no mapping is specified the PCP field will be set to 0 by default.

The dependence between skb_prio, work queues and VLAN PCP priority:

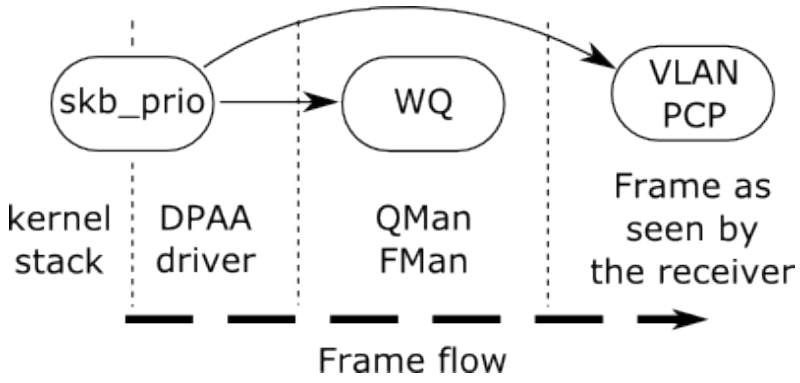

Receiving PFC Frames

Unlike ordinary 802.3x PAUSE frames, PFC frames can selectively pause a certain priority/CoS.

WQ0 responds to PFC frames that have priority 0 set. Example: When a PFC frame arrives containing priority 0 and having a 100 pause time for priority 0, WQ0 i.e. all traffic from CoS 0 is ignored for dequeing for 100 bit times, and dequeing is done from WQ1 and WQ2.

Generating PFC frames

All DPAA1 Private interfaces share a single buffer pool which accounts for the buffers in which the frames are stored upon receiving.

When the Buffer Pool reaches the refill/depletion threshold, PFC frames are sent back to the sender in order to pause frames transmission and thus avoid frame loss.

FMan sends PFC frames that pause all Classes of Traffic defined. The only difference between the classes is the pause time.

The pause time can be configured from menuconfig. A pause time of 0 disables that Class of Service.

When the common buffer pool depletes, issued PFC frames look like this.

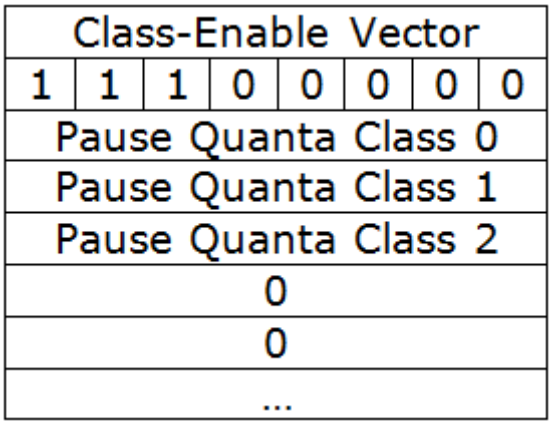

Enabling and disabling PFC using ethtool

Display PFC settings in use for an interface:

```
ethtool -a intf_name
```

Triggering PFC frames ON/OFF

PFC frames can be enabled/disabled on Rx/Tx using ethtool -A, like in the following examples:

```
ethtool -A intf_name rx on
ethtool -A intf_name tx off
ethtool -A intf_name rx off tx off
```

Autonegotiation

When autonegotiation is enabled and the user enables/disables PFC frames on Rx/Tx, these will not automatically be triggered on/off. Instead, the local and the peer PFC symmetric/asymmetric capabilities will be considered. If the peer does not match the local capabilities, the following commands may have no effect:

```
ethtool -A intf_name rx on
ethtool -A intf_name rx off
ethtool -A intf_name tx on
ethtool -A intf_name tx ff
```

When autonegotiation is disabled, ethtool settings override the results of link negotiation.

PFC frame autonegotiation can also be enabled/disabled using ethtool -A:

```
ethtool -A intf_name autoneg on
ethtool -A intf_name autoneg off
```

8.2.2.5.3.8 Core Affined Queues

The driver automatically creates 128 core-affined queues, intended to be used as RX PCD frame queues. These frame queues can be used in PCD configuration files to process certain types of frames on particular CPUs. In order to enhance the PCD files creation, the /etc/fmc/config/ directory from rootfs contains the default configuration and policy files for each platform.

The driver calculates the frame queue IDs based on the address of the MAC registers corresponding to the port using the following formula:

((MAC register address) & 0x1fffff) >> 6

Following are the values for various QorIQ DPAA1 platforms:

Table 64. FMan devices core affined queues

Interface	FQID base	LS1043A	LS1046A
fm1-mac1	0x3800	Y	
fm1-mac2	0x3880	Y	
fm1-mac3	0x3900	Y	Y
fm1-mac4	0x3980	Y	Y
fm1-mac5	0x3a00	Y	Y
fm1-mac6	0x3a80	Y	Y
fm1-mac9	0x3c00	Y	Y
fm1-mac10	0x3c80		Y

These queues are assigned to cores in a round-robin fashion. For instance, if there are 8 cores, 0x3800 will be serviced by core 0, 0x3801 by core 1, 0x3808 by core 0, etc. Currently, if one specifies extra RX PCD queues in the device tree, these queues will also be assigned in this round-robin fashion.

High Priority Core Affined Queues

Starting with SDK 2.0, a new set of RX PCD frame queues has been added, to aid in implementing complex traffic management scenarios. This set of frame queues has a higher priority than the normal RX PCD frame queues, and as such, traffic coming in on these frame queues has a higher precedence than the traffic coming on on the default RX PCD frame queues. One scenario where this is useful is the back-to-back IPsec testing scenario, where the encrypted traffic (RX) is desirable to have a higher priority than the plain text traffic.

The driver calculates the high priority frame queue IDs based on the address of the MAC registers corresponding to the port using the following formula:

65536 + ((MAC register address) & 0x1fffff) >> 6

Following are the values for various QorIQ DPAA1 platforms:

Table 65. FMan devices high priority core affined queues

Interface	FQID base	LS1043A	LS1046A
fm1-mac1	0x13800	Y	
fm1-mac2	0x13880	Y	
fm1-mac3	0x13900	Y	Y
fm1-mac4	0x13980	Y	Y
fm1-mac5	0x13a00	Y	Y
fm1-mac6	0x13a80	Y	Y
fm1-mac9	0x13c00	Y	Y
fm1-mac10	0x13c80		Y

8.2.2.5.4 Quality of Service

DPAA1 platforms can offload QoS functions such as policing, shaping, scheduling and prioritization to dedicated hardware blocks.

Traffic policing is achieved on ingress through the FMan. A two rate three color marker algorithm can be configured through the Frame Manager Configuration (FMC) tool.

Traffic scheduling, shaping, and prioritization is executed on the egress path in the QMan. Multiple algorithms, such as dual rate shaping and strict prioritization, are implemented and can be configured through queuing disciplines.

8.2.2.5.4.1 Policing

The FMan's Policer sub block implements a two rate, three color marker (trTCM) traffic policing algorithm. The algorithm has two configurable flavors: RFC2698 and RFC4115.

The FMC tool, described in detail in Frame Manager Configuration Tool User's Guide, is used to enable the Policer and set up its parameters.

For more information regarding the FMan Policer and how it can be configured, see the Policer Section.

8.2.2.5.4.2 Scheduling and Shaping

8.2.2.5.4.2.1 Description

Specific DPAA1 platforms offer scheduling, shaping and prioritization capabilities through CEETM (Customer Edge Egress Traffic Management). The CEETM hardware block is a member of the QMan. Its purpose is to enhance the performances of DPAA1 platforms by moving the egress QoS logic from software to hardware.

This section briefly describes the CEETM block and its capabilities. Furthermore, it presents how it can be configured through the Linux traffic control tool (tc) by using a custom queuing discipline.

8.2.2.5.4.2.1.1 The CEETM architecture

CEETM is a sub block of the QMan and is an alternative to the regular *frame queue - work queue - channel* scheduling mode. For more information regarding this workflow, or on DCPs and sub-portals, please refer to the **QMan Overview** section.

Refer the figure below for a CEETM block, which is available for each FMan and it is intended to be used by FMan sub-portals linked to Ethernet interfaces.

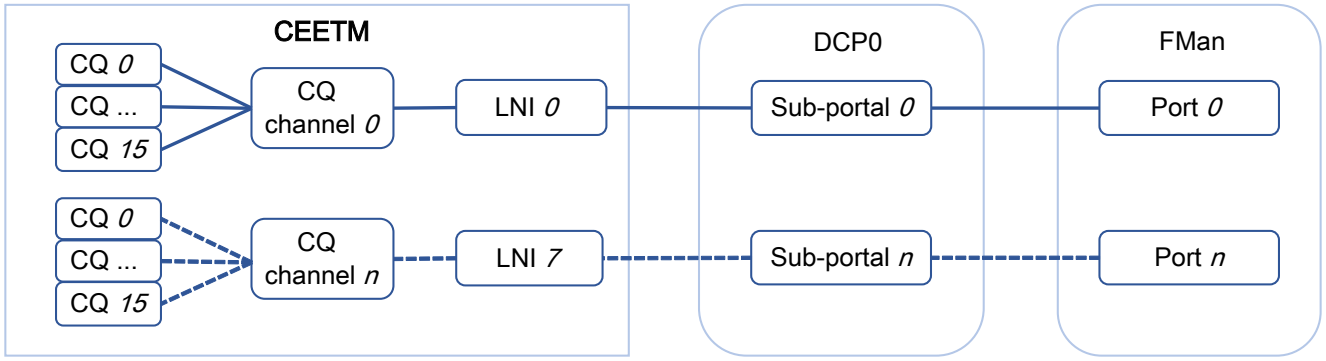

Figure 77. CEETM block

CEETM uses 8 Logical Network Interfaces (LNIs) that can be mapped to the FMan's DCP sub-portals. Depending on the platform used, there are 8 or 32 class queue channels (or CQ channels) that can be mapped to the LNIs. Multiple CQ channels can be mapped to the same LNI.

Each CQ channel contains 16 class queues. 8 CQs are independent while the other 8 can be grouped into 1 class group or 2 class groups of 4 queues each. The first group is called *group A* and the second is called *group B*.

8.2.2.5.4.2.1.2 Features

CEETM implements the following algorithms:

- Strict Priority scheduling
- Weighted Bandwidth Fair Scheduling (WBFS)
- dual-rate shaping with committed and excess rates (CR/ER)
- shaped and unshaped Fair Queueing scheduling (shFQ, uFQ)

These algorithms are used together in specific combinations based on the CEETM's architecture described previously and pictured below:

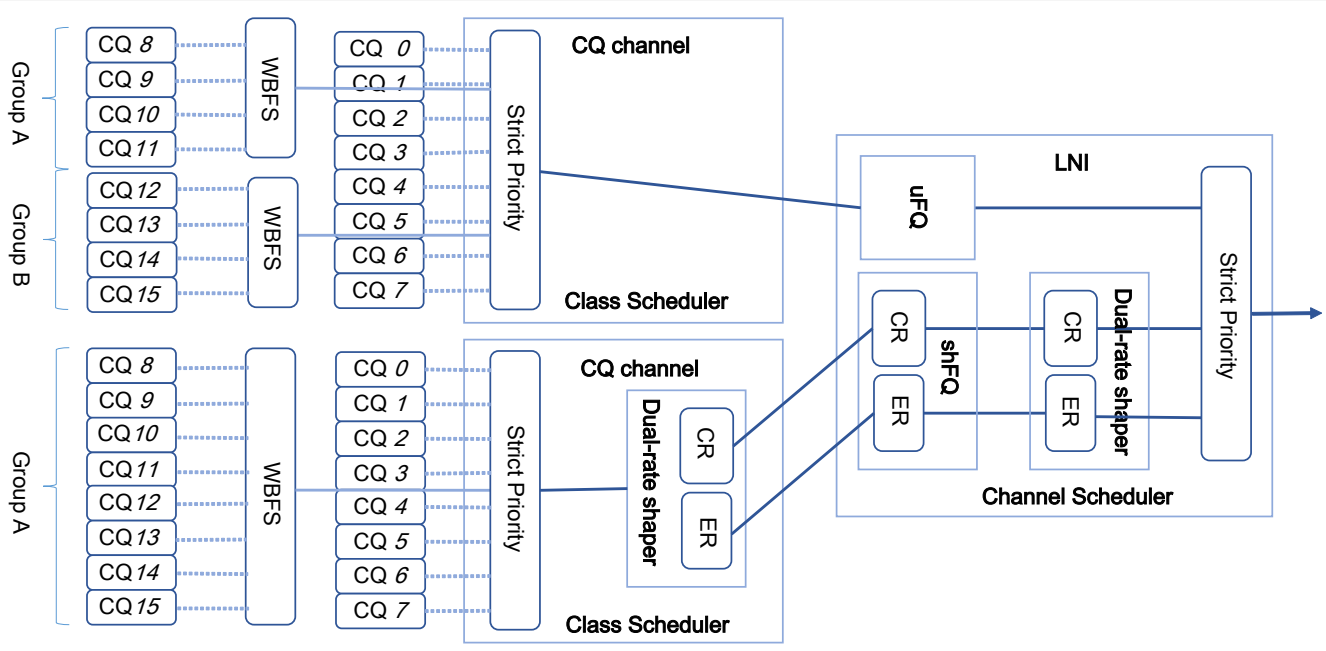

Figure 78. CEETM architecture

All the CQs connected to a CQ channel pass through a Strict Priority scheduler. The lower the CQ's ID, the higher the CQ's priority (e.g. CQ#3 has a higher priority than CQ#4, thus, as long as there are frames queued to CQ#3, CQ#4 will not be dequeued).

The priority of the CQ groups is configurable. All frames coming from the grouped CQs pass through the WBFS algorithm. Each CQ belonging to a group is assigned a weight portion of the bandwidth available to the group. The weight is a value from 1 to 248 in pseudo logarithmic steps of 1.5%. A list of available weights can be found in the platform's QorIQ DPAA Reference Manual.

The CQ channels can be shaped or unshaped. For CQs leading to a shaped channel, all frames will pass through a dual-rate shaper before entering the LNI. The independent CQs, as well as the class groups, can be configured to lead their frames through the CR shaper, the ER shaper, or both.

Each LNI aggregates frames from the CQ channels linked to it. All the unshaped frames from the unshaped CQ channels mapped to the LNI pass through the uFQ algorithm. The CR/ER frames from the shaped CQ channels pass through the shFQ algorithm and through another dual-rate shaper. Lastly, all frames pass through the LNI's Strict Priority module that schedules the unshaped frame (with high priority), the CR frames (with medium priority) and the ER frames (with low priority).

The shFQ algorithm schedules a channel for transmitting if the channel's shaper is time eligible (the shaper has a positive number of tokens in its bucket). When a channel finished its tokens, it is added to a waiting queue where it must wait for any other time eligible channels ahead of it finish transmitting.

The uFQ algorithm is similar to the shFQ. In the uFQ algorithm, all channels are time eligible. After finishing to transmit all their available data, they are added to the back of the time eligible waiting queue where their bucket is instantly refilled. The token bucket limit of the unshaped channels is configurable.

For more information regarding the CEETM's capabilities and detailed descriptions of the mentioned algorithms, take a look at your platform's QorIQ DPAA Reference Manual.

8.2.2.5.4.2.1.3 Integration with queuing disciplines

The CEETM block can be configured through the *ceetm* queuing discipline. A comparison between the hardware block and the traffic control's terminology is drawn in figure below:

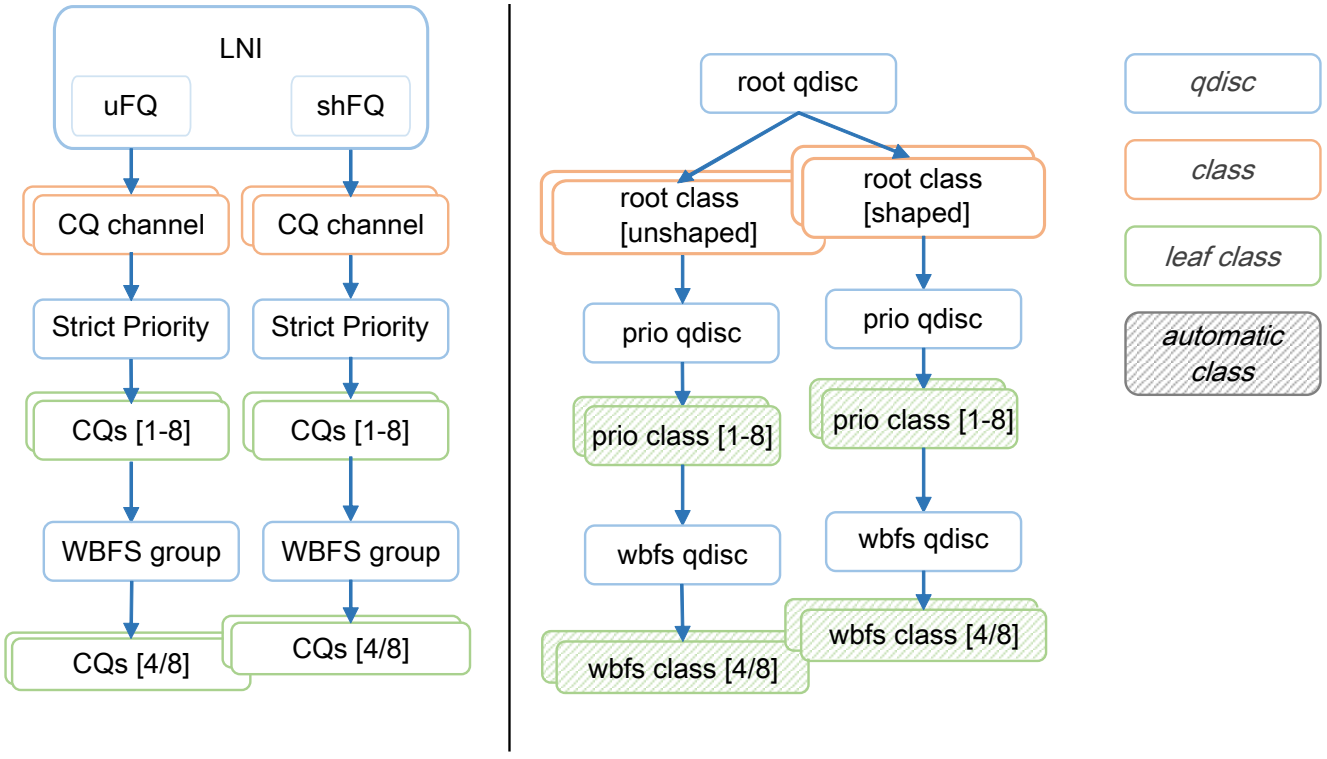

Figure 79. Comparison between CEETM and tc terminology

A LNI can be mapped to a FMan port by adding a *root* ceetm qdisc to a network interface. The LNI shaper's CR and ER are configured by setting a *rate*, and optional *ceil* and *overhead*, on the qdisc.

A CQ channel can be linked to a LNI by creating a ceetm *root* class mapped to the *root* qdisc. For an unshaped channel, the uFQ's token bucket limit (*tbl*) needs to be configured. For a shaped channel, the *rate*, and optional *ceil*, set the CR and ER.

Note: Shaped CQ channels can be linked to the LNI only if the LNI's shaper is enabled.

A channel's independent CQs are configured when a *prio* qdisc is linked to a *root* class. Between 1 and 8 *prio* classes are generated, each class corresponding to a CQ linked to the channel's Strict Priority scheduler. The *qcount* parameter indicates the number of child classes. If the channel is shaped, all generated classes participate by default in both CR and ER shaping. In order to disable one or the other, the CQ's corresponding *prio* class's *cr* and *er* parameters can be changed.

NOTE

CQs linked to a shaped CQ channel can not have both CR and ER shaping disabled.

In order to configure the CQ groups, a *wbfs* qdisc is linked to one of the *prio* classes. Either 4 or 8 *wbfs* classes are generated, depending on the number of CQs in the group indicated by the *qcount* parameter. The group is placed right after its parent in the channel's Strict Priority list (e.g. if the *wbfs* qdisc is linked to the *prio* class #2, the priority list becomes: class #1, class #2, group, class #3, class #4, etc). The CQ weights are configured through the *qweight* parameter and can be changed for each CQ individually. For groups linked to shaped CQ channels, the CR and ER shaping are enabled by the *cr* and *er* parameters.

NOTE

Groups linked to a shaped CQ channel can not have both CR and ER shaping disabled.

For more details on the ceetm qdisc's parameters and configuration, see the Usage section.

8.2.2.5.4.2.2 User guide

8.2.2.5.4.2.2.1 Supported platforms

The CEETM block is present and configurable through the ceetm qdisc on the LS1043A/LS1046A platforms.

8.2.2.5.4.2.2.2 Getting started

1. Enable the networking QoS support in the kernel along with any classifiers or other features that might be needed, as well as the *ceetm* qdisc.

```
->  Networking support (NET [=y])
    -> Networking options
        -> QoS and/or fair queueing (NET_SCHED [=y])
            -> Universal 32bit comparisons w/ hashing (u32) (NET_CLS_U32 [=y])

-> Device Drivers
    -> Network device support (NETDEVICES [=y])
        -> Ethernet driver support (ETHERNET [=y])
            -> Freescale devices (NET_VENDOR_FREESCALE [=y])
                -> DPAA Ethernet (FSL_SDK_DPAA_ETH [=y])
                    -> DPAA CEETM QoS (FSL_DPAA_CEETM [=y])
```

2. Modify the Class Congestion State thresholds if necessary. The default values are chosen keeping in mind the following factors:
   - A threshold too large will buffer frames for a long time in the TX queues, when a small shaping rate is configured. This will cause buffer pool depletion or out of memory errors. This in turn will cause frame loss on RX.
   - A threshold too small will cause unnecessary frame loss by entering congestion too often.

```
-> Device Drivers
    -> Network device support (NETDEVICES [=y])
        -> Ethernet driver support (ETHERNET [=y])
```

```
            -> Freescale devices (NET_VENDOR_FREESCALE [=y])
                -> DPAA Ethernet (FSL_SDK_DPAA_ETH [=y])
                    -> CEETM egress congestion threshold on 1G ports
                       (FSL_DPAA_CEETM_CCS_THRESHOLD_1G [=0x000a0000])
                    -> CEETM egress congestion threshold on 10G ports
                       (FSL_DPAA_CEETM_CCS_THRESHOLD_10G [=0x00640000])
```

3. Build the ceetm app with the flexbuilder.

```
./flex-builder -c ceetm -a arm64
```

8.2.2.5.4.2.2.3 Limitations

- CEETM is supported on DPAA1 Private Ethernet interfaces only.
- CEETM isn't supported on top of Linux bonding interfaces.

8.2.2.5.4.2.2.4 Usage

You can see the ceetm qdisc's help message by running the following command:

```
~# tc qdisc add ceetm help
Usage:
... qdisc add ... ceetm type root [rate R [ceil C] [overhead O]]
... class add ... ceetm type root (tbl T | rate R [ceil C])
... qdisc add ... ceetm type prio qcount Q
... qdisc add ... ceetm type wbfs qcount Q qweight W1 ... Wn [cr CR] [er ER]

Update configurations:
... qdisc change ... ceetm type root [rate R [ceil C] [overhead O]]
... class change ... ceetm type root (tbl T | rate R [ceil C])
... class change ... ceetm type prio [cr CR] [er ER]
... qdisc change ... ceetm type wbfs [cr CR] [er ER]
... class change ... ceetm type wbfs qweight W

Qdisc types:
root - configure a LNI linked to a FMan port
prio - configure a channel's Priority Scheduler with up to eight classes
wbfs - configure a Weighted Bandwidth Fair Scheduler with four or eight classes

Class types:
root - configure a shaped or unshaped channel
prio - configure an independent class queue

Options:
R - the CR of the LNI's or channel's dual-rate shaper (required for shaping scenarios)
C - the ER of the LNI's or channel's dual-rate shaper (optional for shaping scenarios, defaults to 0)
O - per-packet size overhead used in rate computations (required for shaping scenarios, recommended
value is 24 i.e. 12 bytes IFG + 8 bytes Preamble + 4 bytes FCS)
T - the token bucket limit of an unshaped channel used as fair queuing weight (required for unshaped
channels)
CR/ER - boolean marking if the class group or prio class queue contributes to CR/ER shaping (1) or
not (0) (optional, at least one needs to be enabled for shaping scenarios, both default to 1 for prio
class queues)
Q - the number of class queues connected to the channel (from 1 to 8) or in a class group (either 4
or 8)
W - the weights of each class in the class group measured in a log scale with values from 1 to
248 (when adding a wbfs qdisc, either four or eight, depending on the size of the class group; when
updating a wbfs class, only one)
```

Filters need to be added on each qdisc layer in order to allow packets to reach the leaf classes. Likewise, all filters need to be removed from each qdisc layer when no longer used.

8.2.2.5.4.2.3 Examples

8.2.2.5.4.2.3.1 Rate limit two streams

Setup

In the following example a platform with CEETM support (LS1043ARDB - Client) is connected to another board (LS1046ARDB - Server) through a 1G link. The described setup is pictured in Figure 80.

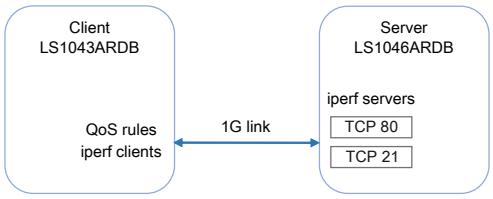

Figure 80. Rate example setup

The iperf clients run on the Client while the iperf servers run on the Server. The Server listens on 2 TCP ports (21 and 80).

```
root@ls1046ardb:~# iperf -s -p 21 &
root@ls1046ardb:~# iperf -s -p 80 &
```

PCDs are applied on both platforms in advance.

```
root@ls1046ardb:~# fmc -c /etc/fmc/config/private/ls1046ardb/RR_FFSSPPPH_1133_5559/config.xml -
p /etc/fmc/config/private/ls1046ardb/RR_FFSSPPPH_1133_5559/policy_ipv4.xml -a
root@ls1043ardb:~# fmc -c /etc/fmc/config/private/ls1043ardb/RR_FQPP_1455/config.xml -p /etc/fmc/
config/private/ls1043ardb/RR_FQPP_1455/policy_ipv4.xml -a
```

In order to keep this example minimal, ARP frames aren't filtered and classified. Thus, MAC addresses need to be exchanged and saved in advance as well.

```
root@ls1043ardb:~# arp -s <server IP address> <server HW address>
root@ls1046ardb:~# arp -s <client IP address> <client HW address>
```

After adding the qdiscs, the Client runs the iperf clients.

```
root@ls1043ardb:~# iperf -c <server IP address> -p 21 &
root@ls1043ardb:~# iperf -c <server IP address> -p 80 &
```

Execution

This example's corresponding qdisc and class hierarchy is pictured in Figure 81.

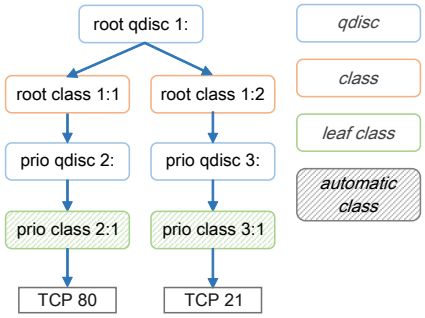

Figure 81. Rate example class hierarchy

Add a ceetm qdisc to the interface and configure the LNI's dual-rate shaper with a CR of 1Gbps.

```
root@ls1043ardb:~#  tc qdisc add dev fm1-mac3 root handle 1: ceetm type root rate 1000mbit overhead 24
```

Add a shaped channel to the LNI and configure its dual-rate shaper with a CR of 150mbps.

```
root@ls1043ardb:~#  tc class add dev fm1-mac3 parent 1: classid 1:1 ceetm type root rate 150mbit
```

Add another shaped channel to the LNI and configure its dual-rate shaper with a CR of 850mbps.

```
root@ls1043ardb:~#  tc class add dev fm1-mac3 parent 1: classid 1:2 ceetm type root rate 850mbit
```

Configure one of the first channel's priority classes (marked by default as both CR and ER eligible).

```
root@ls1043ardb:~#  tc qdisc add dev fm1-mac3 parent 1:1 handle 2: ceetm type prio qcount 1
```

Configure one of the second channel's priority classes (marked by default as both CR and ER eligible).

```
root@ls1043ardb:~#  tc qdisc add dev fm1-mac3 parent 1:2 handle 3: ceetm type prio qcount 1
```

Add filters that will classify all packets with the destination port equal to 80 and lead them through the priority class of the first channel.

```
root@ls1043ardb:~#  tc filter add dev fm1-mac3 parent 1: prio 1 protocol ip u32 match ip dport 80
0xffff flowid 1:1
root@ls1043ardb:~#  tc filter add dev fm1-mac3 parent 2: prio 1 protocol ip u32 match ip dport 80
0xffff flowid 2:1
```

Add filters that will classify all packets with the destination port equal to 21 and lead them through the priority class of the second channel.

```
root@ls1043ardb:~#  tc filter add dev fm1-mac3 parent 1: prio 1 protocol ip u32 match ip dport 21
0xffff flowid 1:2
root@ls1043ardb:~#  tc filter add dev fm1-mac3 parent 3: prio 1 protocol ip u32 match ip dport 21
0xffff flowid 3:1
```

8.2.2.5.4.2.3.2 Prioritization of two streams

Setup

The same setup is used as for the rate limit example.

Execution

This example's corresponding qdisc and class hierarchy is pictured below:

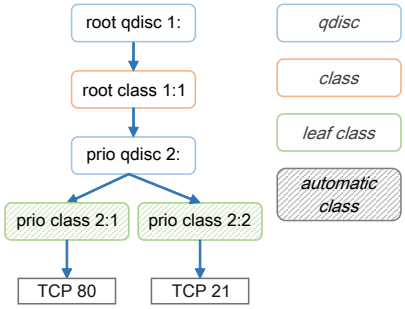

Figure 82. Prioritization example class hierarchy

Add a ceetm qdisc to the interface and configure the LNI's dual-rate shaper with a CR of 1Gbps.

```
root@ls1043ardb:~#  tc qdisc add dev fm1-mac3 root handle 1: ceetm type root rate 1000mbit overhead 24
```

Add a shaped channel to the LNI and configure its dual-rate shaper with a CR of 1Gbps.

```
root@ls1043ardb:~#  tc class add dev fm1-mac3 parent 1: classid 1:1 ceetm type root rate 1000mbit
```

Configure two of the channel's priority classes (marked by default as both CR and ER eligible).

```
root@ls1043ardb:~#  tc qdisc add dev fm1-mac3 parent 1:1 handle 2: ceetm type prio qcount 2
```

Add filters that will classify all packets with the destination port equal to 80 and lead them through the highest priority class of the channel.

```
root@ls1043ardb:~#  tc filter add dev fm1-mac3 parent 1: prio 1 protocol ip u32 match ip dport 80
0xffff flowid 1:1
root@ls1043ardb:~#  tc filter add dev fm1-mac3 parent 2: prio 1 protocol ip u32 match ip dport 80
0xffff flowid 2:1
```

Add filters that will classify all packets with the destination port equal to 21 and lead them through the second (lowest) priority class of the channel.

```
root@ls1043ardb:~#  tc filter add dev fm1-mac3 parent 1: prio 1 protocol ip u32 match ip dport 8000
0xffff flowid 1:1
root@ls1043ardb:~#  tc filter add dev fm1-mac3 parent 2: prio 1 protocol ip u32 match ip dport 8000
0xffff flowid 2:2
```

8.2.2.5.4.2.3.3 Assigning weights to two streams

Setup

The same setup is used as for the rate limit example.

Execution

This example's corresponding qdisc and class hierarchy is pictured below:

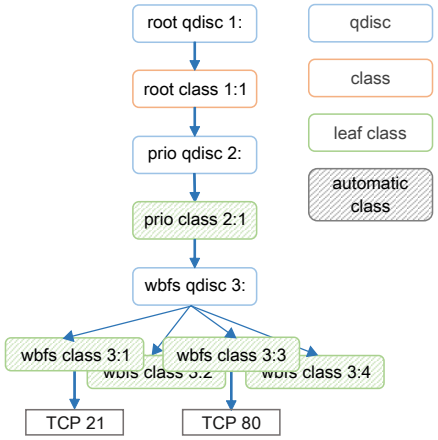

Figure 83. WBFS example class hierarchy

Add a ceetm qdisc to the interface and configure the LNI's dual-rate shaper with a CR of 1Gbps.

```
root@ls1043ardb:~#  tc qdisc add dev fm1-mac3 root handle 1: ceetm type root rate 1000mbit overhead 24
```

Add a shaped channel to the LNI and configure its dual-rate shaper with a CR of 1Gbps.

```
root@ls1043ardb:~#  tc class add dev fm1-mac3 parent 1: classid 1:1 ceetm type root rate 1000mbit
```

Configure one of the channel's priority classes (marked by default as both CR and ER eligible).

```
root@ls1043ardb:~#  tc qdisc add dev fm1-mac3 parent 1:1 handle 2: ceetm type prio qcount 1
```

Configure a class group of four classes, place it after the 2:1 class in the priority list, and assign different weights to each class (10, 50, 120 and 200).

```
root@ls1043ardb:~#  tc qdisc add dev fm1-mac3 parent 2:1 handle 3: ceetm type wbfs qcount 4 qweight
10 50 120 200 cr 1 er 1
```

Add filters that will classify all packets with the destination port equal to 21 and lead them through the class with the highest weight of the group.

```
root@ls1043ardb:~#  tc filter add dev fm1-mac3 parent 1: prio 1 protocol ip u32 match ip dport 21
0xffff flowid 1:1
root@ls1043ardb:~#  tc filter add dev fm1-mac3 parent 2: prio 1 protocol ip u32 match ip dport 21
0xffff flowid 2:1
root@ls1043ardb:~#  tc filter add dev fm1-mac3 parent 3: prio 1 protocol ip u32 match ip dport 21
0xffff flowid 3:1
```

Add filters that will classify all packets with the destination port equal to 80 and lead them through another classes of the group.

```
root@ls1043ardb:~#  tc filter add dev fm1-mac3 parent 1: prio 1 protocol ip u32 match ip dport 80
0xffff flowid 1:1
root@ls1043ardb:~#  tc filter add dev fm1-mac3 parent 2: prio 1 protocol ip u32 match ip dport 80
0xffff flowid 2:1
root@ls1043ardb:~#  tc filter add dev fm1-mac3 parent 3: prio 1 protocol ip u32 match ip dport 80
0xffff flowid 3:3
```

8.2.2.5.4.2.3.4 Unshaped Fair Queuing of two streams

Setup

In the following example a platform with CEETM support (LS1043ARDB - Main) is connected to two other boards: a LS1043ARDB (Client) through a 10G link and a LS1046ARDB (Server) through a 1G link. The described setup is pictured below:

Figure 84. Unshaped Fair Queuing example setup

The iperf clients run on the Client while the iperf servers run on the Server. The Server listens on two TCP ports (80 and 81).

```
root@ls1046ardb:~# iperf -s -p 80 &
root@ls1046ardb:~# iperf -s -p 81 &
```

PCDs are applied on all platforms in advance.

```
root@ls1043ardb:~# fmc -c /etc/fmc/config/private/ls1043ardb/RR_FQPP_1455/config.xml -p /etc/fmc/
config/private/ls1043ardb/RR_FQPP_1455/policy_ipv4.xml -a
root@ls1046ardb:~# fmc -c /etc/fmc/config/private/ls1046ardb/RR_FFSSPPPH_1133_5559/config.xml -
p /etc/fmc/config/private/ls1046ardb/RR_FFSSPPPH_1133_5559/policy_ipv4.xml -a
```

In order to keep this example minimal, ARP frames aren't filtered and classified. Thus, MAC addresses need to be exchanged and saved in advance as well.

```
# Server:
root@ls1046ardb:~# arp -s <main IP address> <main HW address>
# Main:
root@ls1043ardb:~# arp -s <client IP address> <client HW address>
root@ls1043ardb:~# arp -s <server IP address> <server HW address>
# Client:
root@ls1043ardb:~# arp -s <main IP address> <main HW address>
```

IP forwarding is enabled on the Main board. Routes are added on the Server and Client boards as well.

```
# Main:
root@ls1043ardb:~# echo 1 > /proc/sys/net/ipv4/ip_forward
# Client:
root@ls1043ardb:~# route add -net <server network address> <server network mask> gw <main IP address>
# Server:
root@ls1046ardb:~# route add -net <client network address> <client network mask> gw <main IP address>
```

After adding the qdiscs, the Client runs the iperf clients.

```
root@ls1043ardb:~# iperf -c <server IP address> -p 80 &
root@ls1043ardb:~# iperf -c <server IP address> -p 81 &
```

Execution

This example's corresponding qdisc and class hierarchy is pictured in Figure 85.

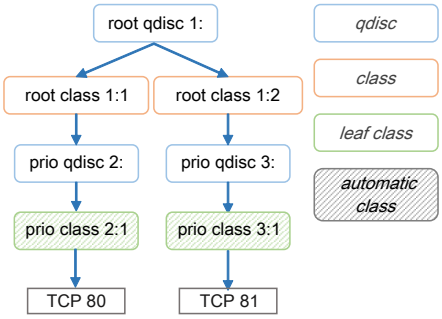

Figure 85. Unshaped Fair Queuing example class hierarchy

Add a ceetm qdisc to the interface and don't configure the LNI's dual-rate shaper.

```
root@ls1043ardb:~# tc qdisc add dev fm1-mac3 root handle 1: ceetm type root
```

Add an unshaped channel to the LNI and configure its CR's token bucket limit to 1000 bytes.

```
root@ls1043ardb:~# tc class add dev fm1-mac3 parent 1: classid 1:1 ceetm type root tbl 1000
```

Add another unshaped channel to the LNI and configure its CR's token bucket limit to 500 bytes.

```
root@ls1043ardb:~# tc class add dev fm1-mac3 parent 1: classid 1:2 ceetm type root tbl 500
```

Configure one of the first channel's priority classes.

```
root@ls1043ardb:~# tc qdisc add dev fm1-mac3 parent 1:1 handle 2: ceetm type prio qcount 1
```

Configure one of the second channel's priority classes.

```
root@ls1043ardb:~# tc qdisc add dev fm1-mac3 parent 1:2 handle 3: ceetm type prio qcount 1
```

Add filters that will classify all packets with the destination port equal to 80 and lead them through the priority class of the first channel.

```
root@ls1043ardb:~#  tc filter add dev fm1-mac3 parent 1: prio 1 protocol ip u32 match ip dport 80
0xffff flowid 1:1
root@ls1043ardb:~#  tc filter add dev fm1-mac3 parent 2: prio 1 protocol ip u32 match ip dport 80
0xffff flowid 2:1
```

Add filters that will classify all packets with the destination port equal to 81 and lead them through the priority class of the second channel.

```
root@ls1043ardb:~#  tc filter add dev fm1-mac3 parent 1: prio 1 protocol ip u32 match ip dport 81
0xffff flowid 1:2
root@ls1043ardb:~#  tc filter add dev fm1-mac3 parent 3: prio 1 protocol ip u32 match ip dport 81
0xffff flowid 3:1
```

8.2.2.5.5 Debugging

This section describes the debugging capabilities of the DPAA1 Ethernet driver.

8.2.2.5.5.1 Ethtool support

Various counters and statistics are exported through ethtool such as the number of interrupts per core, the number of frames per core, the number of available buffers, congestion detection, etc.

Following is an example of an ethtool output:

```
root@ls1043ardb:~# ethtool -S fm1-mac1
NIC statistics:
     interrupts [CPU 0]: 1
     interrupts [CPU 1]: 1
     interrupts [CPU 2]: 2
     interrupts [CPU 3]: 2
     interrupts [TOTAL]: 6
     rx packets [CPU 0]: 0
     rx packets [CPU 1]: 0
     rx packets [CPU 2]: 0
     rx packets [CPU 3]: 0
     rx packets [TOTAL]: 0
     tx packets [CPU 0]: 0
     tx packets [CPU 1]: 0
     tx packets [CPU 2]: 6
     tx packets [CPU 3]: 0
     tx packets [TOTAL]: 6
     tx recycled [CPU 0]: 0
     tx recycled [CPU 1]: 0
     tx recycled [CPU 2]: 0
     tx recycled [CPU 3]: 0
     tx recycled [TOTAL]: 0
     tx confirm [CPU 0]: 1
     tx confirm [CPU 1]: 1
     tx confirm [CPU 2]: 2
     tx confirm [CPU 3]: 2
     tx confirm [TOTAL]: 6
     tx S/G [CPU 0]: 0
     tx S/G [CPU 1]: 0
     tx S/G [CPU 2]: 0
     tx S/G [CPU 3]: 0
     tx S/G [TOTAL]: 0
     rx S/G [CPU 0]: 0
     rx S/G [CPU 1]: 0
     rx S/G [CPU 2]: 0
     rx S/G [CPU 3]: 0
     rx S/G [TOTAL]: 0
     tx error [CPU 0]: 0
     tx error [CPU 1]: 0
     tx error [CPU 2]: 0
     tx error [CPU 3]: 0
     tx error [TOTAL]: 0
     rx error [CPU 0]: 0
     rx error [CPU 1]: 0
     rx error [CPU 2]: 0
     rx error [CPU 3]: 0
     rx error [TOTAL]: 0
     bp count [CPU 0]: 128
     bp count [CPU 1]: 128
     bp count [CPU 2]: 128
     bp count [CPU 3]: 128
     bp count [TOTAL]: 512
     rx dma error: 0
     rx frame physical error: 0
     rx frame size error: 0
     rx header error: 0
     rx csum error: 0
     qman cg_tdrop: 0
```

```
     qman wred: 0
     qman error cond: 0
     qman early window: 0
     qman late window: 0
     qman fq tdrop: 0
     qman fq retired: 0
     qman orp disabled: 0
     congestion time (ms): 0
     entered congestion: 0
     congested (0/1): 0
```

8.2.2.5.5.2 Read/Write of FMan Registers

Most of the FMan configuration registers are mapped into the system memory space. Efficient debugging and testing can be done by making read/write operations on the registers through specialized tools. For example, the number of pause frames received on a particular MAC device can be computed summing the base relative address of every component:

```
0x1a00000 (FMan) +
  0xe8000 (MAC 5) +
    0x014 (Maximum frame length register) =
-------------------------------------
0x1ae8014
```

A memory print of the 0x1ae8014 address will display the maximum frame length configured for the fifth MAC device from the FMan on a LS1046A platform.

The entire memory map for all mapped registers of the DPAA1 hardware components ca be found in each platform's Reference Manual.

8.2.2.5.5.3 Sysfs support

To enable Sysfs in the Linux kernel one must set the **CONFIG_SYSFS** option in Kconfig. The DPAA1 Ethernet Driver exports a series of information in Sysfs such as the buffer pool IDs, the frame queue IDs used by the interface, and MAC registers and statistics, as shown in the following examples:

```
root@ls1046ardb:~# cat /sys/devices/platform/fsl,dpaa/fsl,dpaa:ethernet@2/net/fm1-mac3/bpids
32

root@ls1046ardb:~# cat /sys/devices/platform/fsl,dpaa/fsl,dpaa:ethernet@2/net/fm1-mac3/fqids
Rx error: 259
Rx default: 260
Rx PCD: 14592 - 14719
Rx PCD High Priority: 80128 - 80255
Tx confirmation (mq): 261 - 324
Tx error: 325
Tx default confirmation: 326
Tx: 327 - 390

root@ls1046ardb:~# cat /sys/devices/platform/fsl,dpaa/fsl,dpaa:ethernet@2/net/fm1-mac3/mac_regs
-------
FM MAC - MEMAC - 2 (0xFFFF8000801D6000)
----------------------------------------

0xFFFF8000801D6008: 0x00020840          command_config
0xFFFF8000801D600C: 0x38ca0568          mac_addr0.mac_addr_l
0xFFFF8000801D6010: 0x0000de30          mac_addr0.mac_addr_u
[...]
```

```
root@ls1046ardb:~# cat /sys/devices/platform/fsl,dpaa/fsl,dpaa:ethernet@2/net/fm1-mac3/mac_rx_stats
-------
FM MAC - MEMAC - 2 Rx stats (0xFFFF8000801D6000)
----------------------------------------

0xFFFF8000801D6100: 0x00000000          reoct_l
0xFFFF8000801D6104: 0x00000000          reoct_u
[...]

root@ls1046ardb:~# cat /sys/devices/platform/fsl,dpaa/fsl,dpaa:ethernet@2/net/fm1-mac3/mac_tx_stats
-------
FM MAC - MEMAC - 2 Tx stats (0xFFFF8000801D6000)
----------------------------------------

0xFFFF8000801D6200: 0x00000000          teoct_l
0xFFFF8000801D6204: 0x00000000          teoct_u
[...]
```

8.2.2.5.6 Frequently Asked Questions

1. How do I send a frame up the network stack?

   The frame-processing network stack only exists in the context of a net device. So, “sending a frame into the stack” is an inaccurate statement: the frame must first be associated to a net device, and then the respective instance of the Ethernet driver will deliver the frame to the stack, on behalf of that net device. To achieve that, the frame must arrive via the physical device that underlies the driver.

2. Can I allocate a buffer and inject it as a frame into a private interface’s ingress queues?

   This is probably a mistake. The DPAA1-Ethernet driver makes hard assumptions on buffer ownership, allocation and layout. In addition, the driver expects FMan Parse Results to be placed in the frame preamble, at an offset which is implementation-dependent. In short, while a carefully crafted code might work, it would make for *very* brittle design, and hard to maintain, too.

3. But can I acquire a buffer directly from a private interface’s Buffer Pool, and inject it as such into the private interface’s Rx FQs?

   It is not an intended use-case for private interfaces.

4. What format must an ingress frame have, from the standpoint of the DPAA1-Ethernet driver and the Linux kernel stack?

   The DPAA1-Ethernet driver is expected to perform an initial validation of the ingress frame, but does not look at the Layer-2 fields directly. The current kernel networking code does make a check on the MAC addresses of the frame and the protocol (Ethertype) field. One should not make assumptions on such details of frame processing, because the kernel stack implementation is not bound by any contract.

5. What channel are the FQs assigned to?

   Each interface uses by default one pool channel across all Software Portals and also the dedicated channels of each CPU. Note that any of these channels may be shared with other DPAA1 Ethernet devices, and even with other DPAA1 drivers such as SEC. The *default* and *error* FQs are assigned to the pool channel. The Tx queues are assigned to the (direct connect) channel linked to the Tx port associated with the interface. Any other statically-defined queues will be assigned in a round-robin fashion to the core-affine portals.

6. What work queue are the FQs assigned to?

   - Tx Confirmation FQs go to WQ1
   - Rx Error and Tx Error FQs go to WQ2
   - Rx Default, Tx and PCD FQs go to WQ3

7. How do I use the core-affined queues?

The anticipated way of using the core-affined queues is to use one of the default FMC policy files:

```
/etc/fmc/config/private/common/policy_ipv4.xml
/etc/fmc/config/private/common/policy_ipv6.xml
```

Default FMC configuration files are provided for each reference board:

```
/etc/fmc/config/private/<name of reference board>/<RCW directory>/<name of configuration file>
```

Here are two examples showing FMC commands using the default configuration and policy files:

```
(1) fmc -c /etc/fmc/config/private/ls1043ardb/RR_FQPP_1455/config.xml -p /etc/fmc/config/private/
ls1043ardb/RR_FQPP_1455/policy_ipv4.xml -a
```

Note that `/etc/fmc/config/private/ls1043ardb/RR_FQPP_1455/policy_ipv4.xml` is a soft link to `/etc/fmc/config/private/common/policy_ipv4.xml`.

```
(2) fmc -c /etc/fmc/config/private/ls1043ardb/RR_FQPP_1455/config.xml -p /etc/fmc/config/private/
ls1043ardb/RR_FQPP_1455/policy_ipv6.xml -a
```

Note that `/etc/fmc/config/private/ls1043ardb/RR_FQPP_1455/policy_ipv6.xml` is a soft link to `/etc/fmc/config/private/common/policy_ipv6.xml`.

If you create a configuration file instead of using one of the default configuration files, be sure to use the appropriate policies found in the default policy files:

```
/etc/fmc/config/private/common/policy_ipv4.xml
/etc/fmc/config/private/common/policy_ipv6.xml
```

8.2.2.5.7 Known issues

- The MTU currently defaults to a maximum of 1522. If you want a higher MTU, it is necessary to pass fsl_fm_max_frm=N on the kernel bootargs, where "N" is the desired maximum MTU + 22.

8.2.2.6 Upstream Ethernet Driver

The DPAA 1.x Upstream Ethernet driver variant has been actively maintained in the Linux kernel community since v4.10. Most features and fixes have been back ported to the kernel versions of this current LSDK release.

An overview of the driver, along with its main features and configuration options, is written in the Linux kernel's source tree in the documentation section at *Documentation/networking/dpaa.txt*.

Configuration

The Upstream and Private Ethernet driver variants are independent from one another and are built separately. The Private driver variant is enabled by default by the LSDK. If you wish to build the Upstream driver variant instead, enable the following build options:

```
CONFIG_FSL_DPAA=y
CONFIG_FSL_FMAN=y
CONFIG_FSL_DPAA_ETH=y
CONFIG_FSL_XGMAC_MDIO=y
```

Device Trees

The Upstream and Private Ethernet drivers use different Device Tree Source files. The LSDK enables the device trees associated with the Private driver by default. These end with the *-sdk* flag. The device trees that are used by the Upstream driver variant do not have a flag at the end. For example:

```
fsl-ls1043a-rdb.dts - used by the Upstream Ethernet driver
fsl-ls1043a-rdb-sdk.dts - used by the Private Ethernet driver
```

After building the kernel with the Upstream Ethernet driver enabled, also compile the correct Device Tree Blob for your platform. For example:

```
make freescale/fsl-ls1043a-rdb-sdk.dtb - build the DTB for the Private Ethernet driver
make freescale/fsl-ls1043a-rdb.dtb - build the DTB for the Upstream Ethernet driver
```

Limitations

A workaround for the LS1043A FMan A010022 errata is integrated into the Upstream Ethernet driver. Egress Scatter Gather frames can not be used on this platform.

8.2.2.7 Performance considerations

The performance of both the DPAA 1.x networking drivers and the entire system can be influenced by the following factors. These can be tweaked in order to accommodate the desired use case and to increase the performance when required.

- **RX hashing**

  The hash distribution of traffic among cores guarantees load balancing when many flows are entering the system. The distribution mechanism also maintains order between the frames in a flow, thus maximizing the throughput in TCP scenarios.

  This feature is enabled by default at boot.

  In the Private DPAA 1.x Ethernet Driver, RX hashing is configured through the fmc (Frame Manager Configuration) tool. More details can be found in the Core Affined Queues section as well.

  In the Upstream DPAA 1.x Ethernet Driver, RX hashing is configured through ethtool. More details can be found in the Linux kernel's source tree at *Documentation/networking/device_drivers/freescale/dpaa.txt*.

For additional general performance optimization guidelines, see the General networking performance considerations section.

8.2.3 Queue Manager (QMan) and Buffer Manager (BMan)

8.2.3.1 QMan/BMan Drivers Introduction

Description

This document describes Linux and USDPAA drivers for the QMan and BMan hardware blocks underlying the QorIQ data path. QMan and BMan have independent drivers but their implementation and interfaces are very much analogous due to the similar CCSR and Corenet programming interfaces for each. As such, we will describe here "the driver", when in fact the description applies to both the QMan and BMan drivers equally and independently.

The driver targets the Linux and USDPAA environments. The majority of the code is shared between the environments. Environmental differences are dealt with by including a compatibility layer in the USDPAA code. This code redefines Linux-specific functionality for use in the other environments (for example `irqs` and `spinlocks`).

The driver has two parts to it, "config" and "portal", corresponding to the two complimentary programming interfaces exposed by the device itself - these are described below. Additionally there is a self-test module for each driver that uses the portal interface to perform some basic tests provided one or more portals are made available to the OS via its device-tree.

CCSR, or "global config"

The CCSR map and associated registers allows the device to be configured and controlled in a global/un-partitioned manner. This includes such basic notions as configuring the device's private memory region(s), configuring the hardware interfaces that are exposed by QMan/BMan to the dependent hardware blocks (CAAM, PME, Fman), managing global device error interrupts, etc. Only one "control" operating system should map to this CCSR register space in the case that a hypervisor is managing multiple guests. Other operating systems like secondary Linux instances or USDPAA applications do not have access to CCSR registers.

Functionality

Configuration

The QMan device is configured via device-tree nodes and by some compile-time options controlled via Linux's Kconfig system. See the “QMan and BMan Kernel Configure Options” section for more info.

API

For the Linux kernel, the C interface of the QMan and BMan drivers provides access to portal-based functionality for arbitrary higher-layer code, hiding all the mux/demux/locking details required for shared use by multiple driver layers (networking, pattern matching, encryption, IPC, etc.) The driver makes 1-to-1 associations between cpus and portals to improve cache locality and reduce locking requirements. The QMan API permits users to work with Frame Queues and callbacks, independently of other users and associated portal details. The BMan API permits users to work with Buffer Pools in a similar manner.

For USDPAA, the driver associates portals with threads (in the pthreads sense), so the above comments about “shared use by multiple driver layers” only applies with respect to code executed within the thread owning a portal. To benefit from cache locality, and particularly from portal stashing, USDPAA-enabled threads are generally expected to be configured to execute on the same core that the portal is assigned to. Indeed, the USDPAA API for threads to call to initialise a portal takes the core as a function parameter. Please see the USDPAA User Guide for more information (as well as the “QMan BMan API Reference”).

DPAA1 allocator

The DPAA1 allocator is a purely software-based range-allocator, but this must be explicitly seeded with a hard-coded range of values and is not shared between operating systems. The DPAA1 allocator is used to allocate all QMan and BMan resource, i.e bman-bpid, qman-fqid, qman-pool, qman-cgrid, ceetm-sp, ceetm-lni, ceetm-lfqid, ceetm-ccgrid.

Sysfs Interface

QMan and BMan have a sysfs interface. Refer to the Queue Manager, Buffer Manager API reference Manual for details.

Debugfs Interface

Both the QMan and BMan have a debugfs interface available to assist in device debugging. The code can be built either as a loadable module or statically.

Module Loading

The drivers are statically linked into the kernel. Driver self-tests and the debugfs interface may be built as dynamically loadable modules.

QMan and BMan Kernel Configure Options

Common Kernel Configure Options	Description
CONFIG_STAGING	Required in order to make “staging” drivers such as QMan/ BMan available.
CONFIG_FSL_DPA	Required to build either QMan and/or BMan drivers.

Table continues on the next page...

Table continued from the previous page...

Common Kernel Configure Options	Description
CONFIG_FSL_DPA_CHECKING	Compiles in additional sanity-checks, at the expense of minor performance degradation. Recommended for debugging, but not for benchmarking.
CONFIG_FSL_DPA_CAN_WAIT	Compiles in support for interfaces and functionality that allow callers to optionally be put to “sleep” waiting for temporarily blocked resources to become available rather than returning errors. Eg. enqueuing when an enqueue ring is full. This is enabled unconditionally on linux.
CONFIG_FSL_DPA_CAN_WAIT_SYNC	Similar to “_CAN_WAIT”, but supports additional API flags for waiting for asynchronous operatoins to complete. Eg. after starting a volatile dequeue, wait for all dequeues to complete. This is enabled unconditionally on linux.
CONFIG_FSL_DPA_PIRQ_FAST	If set, causes portals to initialise with fast-path interrupt sources enabled. (Otherwise, polling APIs must be called to perform fast-path processing.) This is enabled unconditionally on linux.
CONFIG_FSL_DPA_PIRQ_SLOW	If set, causes portals to initialise with slow-path interrupt sources enabled. (Otherwise, polling APIs must be called to perform slow-path processing.) This is enabled unconditionally on linux.
CONFIG_FSL_DPA_PORTAL_SHARE	Compiles in support for sharing one CPU's portal with all online CPUs that do not have their own. Useful when assigning most portals to USDPAA applications and leaving only a minimum for kernel requirements, in which case Tx events on all CPUs can be handled by the network driver. This is enabled by default, as the microscopic performance overhead of checking this option is not noticable in the kernel environment.

QMan Kernel Configure Options	Description
CONFIG_FSL_QMAN	Required to build the QMan driver
CONFIG_FSL_QMAN_CONFIG	Handles config/CCSR nodes in the device-tree and initialises the corresponding devices
CONFIG_FSL_QMAN_TEST	Builds a self-test kernel module (static or dynamic) that will, if QMan portal nodes are available in the device-tree, exercise one of the portals and panic() the kernel if any errors are detected.
CONFIG_FSL_QMAN_TEST_STASH_POTATO	This requires the presence of multiple unused cpu-affine portals, and performs a "hot potato" style test enqueuing/ dequeuing a frame across a series of FQs scheduled to different portals (and cpus). The intention is to test stashing. The "potato" will visit each "spoon" (portal/cpu pair) during the test. Each "potato" frame has a single cacheline of data

Table continues on the next page...

Table continued from the previous page...

QMan Kernel Configure Options	Description
	that is read-modify-written by each cpu/portal before passing it to the next.
CONFIG_FSL_QMAN_TEST_HIGH	This requires the presence of cpu-affine portals, and performs high-level API testing with them (whichever portal(s) are affine to the cpu(s) the test executes on).
CONFIG_FSL_QMAN_TEST_ERRATA	This requires the presence of cpu-affine portals, and performs testing that handling for known hardware-errata is correct.
CONFIG_FSL_QMAN_DEBUGFS	This option enables files in the debugfs filesystem.

BMan Kernel Configure Options	Description
CONFIG_FSL_BMAN	Required to build the BMan driver
CONFIG_FSL_BMAN_CONFIG	Handles config/CCSR nodes in the device-tree and initialises the corresponding devices
CONFIG_FSL_BMAN_TEST	Builds a self-test kernel module (static or dynamic) that will, if BMan portal nodes are available in the device-tree, exercise one of the portals and panic() the kernel if any errors are detected.
CONFIG_FSL_BMAN_TEST_HIGH	Performs high-level API testing.
CONFIG_FSL_BMAN_TEST_THRESH	Multi-threaded testing of BMan pool depletion handling.
CONFIG_FSL_BMAN_DEBUGFS	This option enables files in the debugfs filesystem.

Device-tree nodes

Device tree nodes are used to describe QMan/BMan resources to the driver, some of which are specific to control-plane s/w (i.e. depending on CCSR access) and some of which relate to portal usage for control and data plane s/w.

CCSR, or "global config"

The "fsl,qman" and "fsl,bman" nodes (i.e. these "compatible" property types) indicate the presence and location of the 4Kb "Configuration, Control, and Status Register" (CCSR) space, for use by a single control-plane driver instance to initialise and manage the device. The device-tree usually groups all such CCSR maps as sub-nodes under a parent node that represents the SoCs entire CCSR map, usually named "soc" or "ccsr". For example;

```
soc {
      #address-cells = <1>;
      #size-cells = <1>;
      device_type = "soc";
      compatible = "simple-bus";

      ddr1: memory-controller@8000{
          [...]
      };
      i2c@118000 {
          [...]
      };
      mpic: pic@40000 {
```

```
            [...]
        };

        qman: qman@318000 {
            compatible = "fsl,qman";
            reg = <0x318000 0x1000>;
            interrupts = <16 2 1 3>;
            /* Commented out, use default allocation */
            /* fsl,qman-fqd = <0x0 0x20000000 0x0 0x01000000>; */
            /* fsl,qman-pfdr = <0x0 0x21000000 0x0 0x01000000>; */
        };
        bman: bman@31a000 {
             compatible = "fsl,bman";
             reg = <0x31a000 0x1000>;
             interrupts = <16 2 1 3>;
             /* Same as fsl,qman-*, use default allocation */
             /* fsl,bman-fbpr = <0x0 0x22000000 0x0 0x01000000>; */
        };
        [...]
    };
```

Contiguous memory

The `fsl,qman-fqd`, `fsl,qman-pfdr`, and `fsl,bman-fbpr` properties can be used to specify which contiguous sub-regions of memory should be used for the various memory requirements of QMan/BMan. The properties use 64-bit values, so 4 cells express the address/size 2-tuple to use. In the above example, if uncommented, the QMan/BMan resources would be allocated in the range `0x2000000-0x221fffff`, with 16MB each for QMan FQD and PFDR memory and BMan FBPR memory. If these properties are not specified (or they are commented out) in the device tree, then default values hard-coded within the QMan and BMan drivers are used instead. The linux kernel will reserve these memory ranges early on boot-up. Note that in the case of a hypervisor scenario, these memory ranges are relative to the partition memory space of the control-plane guest OS.

QMan FQID-range allocation

The "fsl,fqid-range" node (i.e. these "compatible" property types) indicates a range of FQIDs to use for FQID allocation by the QMan driver. The range within the node is specified using a property of the same name, and whose two cells are the starting FQID value and the count. Multiple nodes can be provided to seed the allocator with a discontiguous set of FQIDs.

Eg. to specify that the allocator use FQIDs between 256 and 512 inclusive;

```
    qman-fqids@0 {
        compatible = "fsl,fqid-range";
        fsl,fqid-range = <256 256>;
    };
```

BMan BPID-range allocation

The "fsl,bpool-range" node (i.e. these "compatible" property types) indicates a range of BPIDs to use for BPID allocation by the BMan driver. The range within the node is specified using a property of the same name, and whose two cells are the starting BPID value and the count. Multiple nodes can be provided to seed the allocator with a discontiguous set of BPIDs.

Eg. to specify that the allocator use BPIDs between 32 and 64 inclusive;

```
    bman-bpids@0 {
        compatible = "fsl,bpid-range";
        fsl,bpid-range = <32 32>;
    };
```

Compile-time Configuration Options

The "Kernel Configure Options" above describe the compile-time configuration options for the kernel. The device tree entries are also "compile-time", and are described above.

Source Files

As mentioned earlier, the QMan/BMan drivers support Linux and USDPAA environments. Many of the files have the same contents between the different environments, though the files are located at different paths to satisfy the different build systems for each.

For DPAA1 QBMan drivers, all the files are located in `drivers/soc/fsl/qbman` directory

USDPAA

Source Files	Description
include/usdpaa/fsl_qman.h	The QMan driver APIs
include/usdpaa/fsl_bman.h	The BMan driver APIs
include/usdpaa/fsl_usd.h	The USDPAA-specific APIs for QMan/BMan (eg. Binding portals to threads, support for UIO-based interrupt handling, etc.)
include/usdpaa/compat.h	The QMan/BMan driver compatibility shims
include/usdpaa/compat_list.h	The QMan/BMan driver compatibility shims, linked-list support.
src/qbman/qman_*.*	The QMan driver
src/qbman/bman_*.*	The BMan driver
src/qbman/dpa_sys.h	USDPAA-specific definitions shared by the QMan/BMan drivers.
src/qbman/dpa_alloc.c	USDPAA support for dpa allocator.
src/qbman/06-usdpaa-uio.rules	Udev rules to create appropriately-named /dev entries when the kernel registers portals as UIO devices.

Build Procedure

The procedure is a standard SDK build, which includes Linux kernel and USDPAA drivers by default.

Test Procedure

The QMan/BMan drivers are used by all Linux kernel software that communicates with datapath functionality such as CAAM, PME, and/or Fman. (The exception is that kernel cryptographic acceleration presently bypasses QMan/BMan interfaces by using the device's own “job queue” interface.) Use of such datapath-based functionality provides test-coverage of user-facing features of the QMan/BMan drivers in the Linux environment. This complements the QMan/BMan unit tests that are run during development but are not part of the release. For USDPAA, all applications and tests use QMan and BMan interfaces in a fundamental way, so all imply a degree of test-coverage.

Additionally, for Linux, the QMan and BMan self-tests target QMan and BMan directly without involving other datapath blocks. If these are built statically into the kernel and the device-tree makes one or more QMan and/or BMan portals available, then the self-tests will run during the kernel boots and log output to the boot console. The output of both QMan and BMan tests resembles the following excerpts;

Detecting the CCSR and portal device-tree nodes;

```
[...]
Qman ver:0a01,01,02
[...]
Bman ver:0a02,01,00
[...]
BMan err interrupt handler present

BMan portal initialised, cpu 0

BMan portal initialised, cpu 1

BMan portal initialised, cpu 2

BMan portal initialised, cpu 3

BMan portal initialised, cpu 4

BMan portal initialised, cpu 5

BMan portal initialised, cpu 6

BMan portal initialised, cpu 7

BMan portals initialised

BMan: BPID allocator includes range 32:32

QMan err interrupt handler present

QMan portal initialised, cpu 0

QMan portal initialised, cpu 1

QMan portal initialised, cpu 2

QMan portal initialised, cpu 3

QMan portal initialised, cpu 4

QMan portal initialised, cpu 5

QMan portal initialised, cpu 6

QMan portal initialised, cpu 7

QMan portals initialised

QMan: FQID allocator includes range 256:256

QMan: FQID allocator includes range 32768:32768

QMan: CGRID allocator includes range 0:256

QMan: pool channel allocator includes range 33:15

[...]
```

Running the QMan and BMan self-tests;

```
[...]
BMAN: --- starting high-level test ---
BMAN: --- finished high-level test ---
[...]
qman_test_high starting
VDQCR (till-empty);
VDQCR (4 of 10);
VDQCR (6 of 10);
scheduled dequeue (till-empty)
Retirement message received
qman_test_high finished
[...]
```

Running the BMan threshold test;

```
[...]
bman_test_thresh: start
bman_test_thresh: buffers are in
thread 0: starting
thread 1: starting
thread 2: starting
thread 3: starting
thread 4: starting
thread 5: starting
thread 6: starting
thread 7: starting
thread 0: draining...
cb_depletion: bpid=62, depleted=2, cpu=0
cb_depletion: bpid=62, depleted=2, cpu=1
cb_depletion: bpid=62, depleted=2, cpu=2
cb_depletion: bpid=62, depleted=2, cpu=3
cb_depletion: bpid=62, depleted=2, cpu=4
cb_depletion: bpid=62, depleted=2, cpu=5
cb_depletion: bpid=62, depleted=2, cpu=6
cb_depletion: bpid=62, depleted=2, cpu=7
thread 0: draining done.
thread 0: exiting
thread 1: exiting
thread 2: exiting
thread 3: exiting
thread 4: exiting
thread 5: exiting
thread 6: exiting
thread 7: exiting
bman_test_thresh: done
[...]
```

Running the QMan hot potato test;

```
[...]
qman_test_hotpotato starting
Creating 2 handlers per cpu...
Number of cpus: 8, total of 16 handlers
Sending first frame
Received final (8th) frame
qman_test_hotpotato finished
[...]
```

If the self-tests detect any errors, they will `panic()` the kernel immediately, so if the kernel gets beyond the QMan/BMan self-tests then the tests passed.

8.2.3.2 QMan BMan API Reference

8.2.3.2.1 Introduction to the Queue Manager and the Buffer Manager

The Queue Manager (QMan) and Buffer Manager (BMan) devices each expose two interfaces to software control. One interface is the Configuration and Control Status Register map (CCSR), which provides global configuration of the device, registers related to global device errors, performance, statistics, debugging, etc. The other interface is the CoreNet interface, which provides a memory map with multiple "portals" located in separable sub-regions for independent/parallel run-time use of the devices.

The software described in this document is targeted to the Linux kernel and Linux user-space (USDPAA) system targets. However, only Linux supports operating as the controller for the devices, so all interfaces related to CCSR access are Linux-only. Also, remember platform-specific considerations when working with the interfaces described here. See Operating system specificsfor more details.

8.2.3.2.2 Buffer Manager

8.2.3.2.2.1 Buffer Manager (BMan) Overview

Function

The QorIQ Buffer Manager (BMan) SoC block manages pools of buffers for use by software and hardware in the “Datapath” architecture.

In particular;

1. provides an efficient use of buffer resources because the output will only occupy as many buffers as required (whereas pre-allocation must provide for the worst-case scenario each time if it wishes to avoid truncation and information-loss),
2. software does not need to provision resources for every queued operation nor handle the complications of recycling unused output buffers, etc.,
3. the footprint for buffer resources for a variety of different flows (and even different guest operating systems) can be "pooled".

With respect to "buffers", BMan really acts as an allocator of any 48-bit tokens the user wishes - BMan does not interpret these tokens at all, it is only the software and hardware blocks that use BMan that may assume these to be memory addresses. In many cases, the BMan acquire and release interfaces are likely to be more efficient than software-managed allocators due to the proximity of BMan's corenet-based interfaces to each CPU and its on-board caching and pre-fetching of pool data. Possible examples include; a BMan-oriented page-allocator for operating system memory-management, a "frame queue" allocator to manage unused QMan frame queue descriptors (FQD), etc. In particular, the frame queue example provides a simple mechanism for sharing a range of frame-queue IDs across different partitions/operating systems in a virtualized environment without needing inter-partition communications in software.

Interfaces

The BMan block has a CCSR register space and interrupt line associated with the block for global configuration and management, specifically;

- the private system memory range (invisible to software) needed by BMan,
- software and hardware depletion interrupt thresholds for each pool,
- device error handling uses the global interrupt line and the CCSR register space contains error-capture and error-status registers.

The BMan block also exposes a Corenet memory space for low-latency interaction by the multiple SoC cores, and this corenet region is divided into a geometry of "portals" to allow independent access to BMan functionality in a partitioned (and/or virtualized)

environment. Each portal consists of one 16KB cache-enabled and one 4KB cache-inhibited sub-range of the Corenet region, as well as a per-portal interrupt line. There are a variety of possible reasons for using distinct portals;

- for partitioning between distinct guest operating systems,
- to dedicate a portal for each CPU to reduce locking and improve cache-affinity,
- to make distinct portal configurations available,
- to give certain applications their own portal rather than enforcing a mux/demux layer to share a portal between applications,
- [etc.]

Each portal presents the following BMan functionality;

- a "release command ring" (RCR), a pipelined mechanism for software to hardware commands that release buffers to BMan-managed buffer pools,
- a "management command" interface (MC), a low-latency command/response interface for acquiring buffers from buffer pools, and querying the status of all buffer pools,
- an interrupt line and associated status, disable, enable, and inhibit registers.

These portal interfaces will be described in more detail in their respective sections.

8.2.3.2.2.2 BMan configuration interface

The BMan configuration interface is an encapsulation of the BMan CCSR register space and the global/error interrupt line. Whereas BMan portals provide independent channels for accessing BMan functionality, the configuration interface represents the BMan device itself. The BMan configuration interface is presently limited to the device-tree node that represents it, with one exception: an API exists to set per-buffer-pool depletion thresholds. This API is only available in the linux control-plane - that is, a kernel compiled with BMan control support that has the BMan CCSR device-tree node present. In a hypervisor scenario, this implies that only the control-plane linux guest OS can set buffer pool depletion thresholds.

8.2.3.2.2.2.1 BMan Device-Tree Node

The BMan device tree node represents the BMan device and its CCSR configuration space. When a linux kernel has BMan control support compiled in, it will react to this device tree node by configuring and managing the BMan device. The device-tree node sits within the CCSR node ("soc") and is of the following form;

```
        soc@fe000000 {
                [...]
                bman: bman@31a000 {
                        compatible = "fsl,bman";
                        reg = <0x31a000 0x1000>;
                        fsl,liodn = <0x20>;
                };
                [...]
          };
```

'compatible' and 'reg' are standard ePAPR properties.

8.2.3.2.2.2.1.1 Free Buffer Proxy Records

As previously mentioned, BMan buffer pools needn't be used only for managing memory buffers, but in fact can manage pools of arbitrary 48-bit token values, whatever those tokens might represent. This is possible because BMan never uses those token values as memory locations - all management of buffer pools is maintained in memory that is private to the BMan block. Specifically, BMan uses some internal memory together with a private range of contiguous system memory for backing store. The internal units of the backing store memory are called "free buffer proxy records" (FBPRs), each of which occupies a 64-byte cacheline of memory, and can hold 8 tokens.

The current driver implementation allows this memory resource to be specified via the 'fsl,bman-fbpr' device-tree property, or by resorting to a default allocation of contiguous memory early during kernel boot. The 'fsl,bman-fbpr' property specifies a 2-tuple

of address and size, specifying the physical address range to assign to BMan. The example given configures 16MB for FBPR memory **(262,144 FBPR entries or 2,097,152 buffer tokens)**. These elements are expressed as 64-bit values, so take two cells each:

```
                        fsl,fbpr = <0x0 0x20000000 0x0 0x01000000>;
```

If the hypervisor is in use, this address range is "guest physical". If the given memory range falls within the range used by the linux control-plane OS, it will attempt to reserve the range against use by the OS.

NOTE

For all BMan and QMan private memory resources, the alignment of the memory region must match its size.

8.2.3.2.2.2.1.2 Logical I/O Device Number (BMan)

Reads and writes to BMan's FBPR memory are subject to processing by the PAMU IO-MMU configuration of the SoC. In particular, BMan has an LIODN (Logical I/O Device Number) register setting that will be used by PAMU authorise and possibly translate memory accesses. The bootloader (u-boot) will program BMan's LIODN register and it will add this value as the "fsl,liodn" property before passing it along to the booted software.

```
        fsl,liodn = <0x20>;
```

This property is only used by the hypervisor, in order to ensure that any translation between guest physical and real physical memory for the linux guest OS is similarly applied to BMan transactions. If linux is booted natively (no hypervisor), then the PAMU is either left in bypass mode or it is configured without translation. In any case the LIODN is of little practical importance to the configuration or use of BMan driver software.

8.2.3.2.2.2.2 Buffer Pool Node

The BMan buffer pool device tree node represents one of a BMan device's buffer pools and its associated configuration. When a linux kernel has BMan control support compiled in, it will react to this device tree node by configuring and managing the BMan buffer pool, in particular the pool will be marked as reserved by the driver so that it is not available for dynamic assignment. The device-tree nodes usually sit within a BMan portals parent node ("bman-portals") and is of the following form;

```
                bman-portals@f4000000 {
                        [...]
                        buffer-pool@0 {
                                compatible = "fsl,bpool";
                               fsl,bpid = <0x0>;
                       fsl,bpool-cfg = <0x0 0x100 0x0 0x1 0x0 0x100>;
                                fsl,bpool-thresholds = <0x8 0x20 0x0 0x0>;
                        };
                        [...]
        };
```

8.2.3.2.2.2.2.1 Buffer Pool ID

The BMan device supports hardware managed buffer pools. Specifications and valid ID ranges vary between SoC's. Refer to the appropriate SoC Reference Manual for more information. The example above configures buffer pool 0, which is used by the QMan driver as an inter-partition allocator of unused QMan Frame Queue IDs;

```
        fsl,bpid = <0x0>;
```

Buffer pool nodes in the device-tree indicate that the corresponding buffer pool IDs are reserved, ie. that they are not to be used for ad-hoc allocation of unused pools.

8.2.3.2.2.2.2.2 Seeding Buffer Pools

It is also possible to have the control plane linux BMan driver seed the buffer pool with an arbitrary arithmetic sequence of values, using the "fsl,bpool-cfg" property. This property is a 3-tuple of 64-bit values (each taking 2 cells) defining the arithmetic sequence; the count, the increment, and the base.

```
        fsl,bpool-cfg = <0x0 0x100 0x0 0x1 0x0 0x100>;
```

In this example, the QMan FQ allocator implemented using BMan buffer pool ID 0 is seeded with 256 FQIDs in the range [256...511].

8.2.3.2.2.2.2.3 Depletion Thresholds

Each of the 64 buffer pools has CCSR registers related to depletion-handling. A pool is considered "depleted" once the number of buffers in that pool crosses a "depletion-entry" threshold from above, and this ends when the number of buffers subsequently crosses a "depletion-exit" threshold from below (the depletion-exit threshold should be higher than the depletion-entry threshold).

Each pool maintains two independent depletion states - one for software use and another for hardware blocks. Hardware blocks (like CAAM, FMan, PME) use the hardware depletion state primarily for the purpose of implementing push back (e.g. by stalling input-processing, issuing "pause frames", etc). There is a depletion-entry and -exit threshold for each buffer pool related to this hardware depletion state. The software depletion state serves two possible purposes - one is to allow software to implement push back too. The other use of software depletion thresholds is to allow software to manage "replenishment" of buffer pools. It is software that seeds buffer pools with blocks of memory initially and if desired, it can also use this mechanism to selectively provide additional blocks at run-time during depletion.

```
                        fsl,bpool-thresholds = <0x8 0x20 0x0 0x0>;
```

Here, software depletion thresholds have been set for the buffer pool used for the FQ allocator, but hardware depletion thresholds are disabled (the pool is for software use only). The pool will enter depletion when it drops below 8 "buffers" (in this case, FQIDs), and exit depletion when it rises above 32.

8.2.3.2.2.2.3 BMan Portal Device-Tree Node

The BMan Corenet portal interface in QorIQ P4080 provides up to 10 distinct memory-mapped interfaces for use by software to interact efficiently with BMan functionality. Specifically, each portal provides the following sub-interfaces; RCR (Release Command Ring), MC (Management Command), and ISR (Interrupt Status Register). For non-P4080 specifications, refer to the appropriate QorIQ SoC Reference Manual.

The BMan driver determines the available corenet portals from the device tree. The portal nodes are at the physical address scope (unlike the device-tree node for the BMan device itself, which is within the “soc” physical address node that represents

CCSR). These nodes indicate the physical address ranges of the cache-enabled and cache-inhibited sub-regions of the portal (respectively), and look something like the following;

```
        bman-portal@0 {
                compatible = "fsl,bman-portal";
                reg = <0xe4000000 0x4000 0xe4100000 0x1000>;
                interrupts = <0x69 2>;
                interrupt-parent = <&mpic>;
                cell-index = <0x0>;
                cpu-handle = <&cpu3>;
        };
```

The most note-worthy property is "cpu-handle", which is used to express an affinity/association between the given BMan portal and the CPU represented by the referenced device-tree node.

8.2.3.2.2.2.3.1 Portal Initialization (BMan)

The driver is informed of the BMan portals that are available to it via the device-tree passed to the system from the boot process. For those portals that aren't reserved for USDPAA usage via the "fsl,usdpaa-portal" property, it will automatically create TLB entries to map the BMan portal corenet sub-regions as cpu-addressable and cache-inhibited or cache-enabled as appropriate.

The BMan driver will automatically associate initialised BMan portals with the CPU to which they are configured, only a one-per-CPU basis (if multiple portals are configured for the same CPU, only one is used). The purpose of this is to provide a canonical portal that software can use for whichever CPU it is running on, with the advantages of a cpu-affine interface being improved cache-locality and reduced locking. This requires that each CPU have at least one portal device-tree node dedicated to it using the "cpu-handle" property.

8.2.3.2.2.2.3.2 Portal sharing

If there are CPUs that have no affine portal associated with them (for example if most portals have been reserved for USDPAA use), then the driver will select the highest-index portal to be configured for "sharing" with the CPUs that have no affine portal, otherwise called "slave CPUs" in this document. In this mode of operation, a coarser locking scheme is used for the portal in order to properly synchronise use by more than one CPU.

One key point to understand with portal sharing is that hardware-instigated portal events will continue to be processed only by the CPU to which the portal is affine, they are not shared. One consequence of this is that slave CPUs can not use *_irqsource_*() APIs to alter the interrupt-vs-polling state of the portal, nor can they call *_poll_*() APIs to perform run-to-completion servicing of the portal. The sharing of the portal is only to allow software-instigated portal functionality to be available to slave CPUs, such as creating and manipulating objects, performing commands, etc.

8.2.3.2.3 BMan CoreNet portal APIs

The following sections describe interfaces provided by the BMan driver for manipulating portals, as defined in BMan Portal Device-Tree Node.

8.2.3.2.3.1 BMan High-Level Portal Interface

8.2.3.2.3.1.1 Overview (BMan)

The high-level portal interface provides management and encapsulation of a portal hardware interface. The operations performed on the portal are co-ordinated internally, hiding the user from the I/O semantics, and allowing multiple users/contexts to share portals without collaboration between them. This interface also provides an object representation for buffer pools, with optional assists for cases where the user wishes to track depletion entry and exit events.

This interface provides locking and arbitration of portal operations from multiple software contexts and/or threads (ie. the portal is shared). In cases where a resource is busy, the interface also gives callers the option of blocking/sleeping until the resouce is available. In any case where sleeping is an option, the caller can also specify whether the sleep should be interruptible.

8.2.3.2.3.1.2 Portal management (BMan)

The portal management API provides bman_affine_cpus(), which returns a mask that indicates which CPUs have auto-initialized portals associated with them. See BMan Portal Device-Tree Node. All other BMan API functions must be executed on CPUs contained within this mask, and any interactions they require with h/w will be performed on the corresponding portals.

```
/**
 * bman_affine_cpus - return a mask of cpus that have portal access
 */
const cpumask_t *bman_affine_cpus(void);
```

8.2.3.2.3.1.2.1 Modifying interrupt-driven portal duties (BMan)

Portals have various servicing duties they must perform in reaction to hardware events. The portal management API allows applications to control which of these duties/events are triggered by interrupt-handling versus those which are performed at the application's explicit `request via bman_poll()`. If portal-sharing is in effect, refer to Portal sharing. These APIs will not succeed when called from a slave CPU.

```
#define BM_PIRQ_RCRI    0x00000002      /* RCR Ring (below threshold) */
#define BM_PIRQ_BSCN    0x00000001      /* Buffer depletion State Change */
/**
 * bman_irqsource_get - return the portal work that is interrupt-driven
 *
 * Returns a bitmask of BM_PIRQ_**I processing sources that are currently
 * enabled for interrupt handling on the current cpu's affine portal. These
 * sources will trigger the portal interrupt and the interrupt handler (or a
 * tasklet/bottom-half it defers to) will perform the corresponding processing
 * work. The bman_poll_***() functions will only process sources that are not in
 * this bitmask. If the current CPU is sharing a portal hosted on another CPU,
 * this always returns zero.
 */
u32 bman_irqsource_get(void);
/**
 * bman_irqsource_add - add processing sources to be interrupt-driven
 * @bits: bitmask of BM_PIRQ_**I processing sources

 * Adds processing sources that should be interrupt-driven, (rather than
* processed via bman_poll_***() functions). Returns zero for success, or
* -EINVAL if the current CPU is sharing a portal hosted on another CPU.
*/
int bman_irqsource_add(u32 bits);
/**
* bman_irqsource_remove - remove processing sources from being interrupt-driven
* @bits: bitmask of BM_PIRQ_**I processing sources
*
* Removes processing sources from being interrupt-driven, so that they will
* instead be processed via bman_poll_***() functions. Returns zero for success,
* or -EINVAL if the current CPU is sharing a portal hosted on another CPU. */
int bman_irqsource_remove(u32 bits);
```

8.2.3.2.3.1.2.2 Processing non-interrupt-driven portal duties (BMan)

If portal-sharing is in effect, refer to Portal sharing. These APIs will not succeed when called from a slave CPU.

```
/**
 * bman_poll_slow - process anything that isn't interrupt-driven.
 *
 * This function does any portal processing that isn't interrupt-driven. NB,
 * unlike the legacy wrapper bman_poll(), this function will deterministically
```

```
 * check for the presence of portal processing work and do it, which implies
 * some latency even if there's nothing to do. The bman_poll() wrapper on the
 * other hand (like the qman_poll() wrapper) attenuates this by checking for
 * (and doing) portal processing infrequently. Ie. such that qman_poll() and
 * bmna_poll() can be called from core-processing loops. Use bman_poll_slow()
 * when you yourself are deciding when to incur the overhead of processing. If
* the current CPU is sharing a portal hosted on another CPU, this function will
* return -EINVAL, otherwise returns zero for success.
*/
int bman_poll_slow(void);
/**
 * bman_poll - process anything that isn't interrupt-driven.
 *
 * Dispatcher logic on a cpu can use this to trigger any maintenance of the
 * affine portal. This function does whatever processing is not triggered by
 * interrupts. This is a legacy wrapper that can be used in core-processing
 * loops but mitigates the performance overhead of portal processing by
 * adaptively bypassing true portal processing most of the time. (Processing is
 * done once every 10 calls if the previous processing revealed that work needed
 * to be done, or once very 1000 calls if the previous processing revealed no
 * work needed doing.) If you wish to control this yourself, call
 * bman_poll_slow() instead, which always checks for portal processing work.
 */
void bman_poll(void);
```

8.2.3.2.3.1.2.3 Recovery support (BMan)

Note that the following functions require the BMan portal to have been initialized in "recovery mode", which is not possible with the current release. As such, these functions are for future use only (and documented here only because they're declared in the API header).

```
/**
 * bman_recovery_cleanup_bpid  - in recovery mode, cleanup a buffer pool
 */
int bman_recovery_cleanup_bpid(u32 bpid);
/**
 * bman_recovery_exit - leave recovery mode
 */
int bman_recovery_exit(void);
```

8.2.3.2.3.1.2.4 Determining if the release ring is empty

```
/**
 * bman_rcr_is_empty - Determine if portal's RCR is empty
 *
 * For use in situations where a cpu-affine caller needs to determine when all
 * releases for the local portal have been processed by BMan but can't use the
 * BMAN_RELEASE_FLAG_WAIT_SYNC flag to do this from the final bman_release().
 * The function forces tracking of RCR consumption (which normally doesn't
 * happen until release processing needs to find space to put new release
 * commands), and returns zero if the ring still has unprocessed entries,
 * non-zero if it is empty.
 */
int bman_rcr_is_empty(void);
```

8.2.3.2.3.1.3 Pool Management

To work with BMan buffer pools, a pool object must be created. As explained in Depletion State, the pool may be created with the BMAN_POOL_FLAG_DEPLETION flag and corresponding depletion-entry/exit callbacks if the owner wishes to be notified of changes in the pool's depletion state. Creation of the pool object can also modify the pool's depletion entry and exit thresolds with the BMAN_POOL_FLAG_THRESH flag, so long as the BMAN_POOL_FLAG_DYNAMIC_BPID flag is specified (which will allocate an unreserved BPID) and when running in the control-plane (where reserved BPIDs are tracked). Depletion thresholds for reserved BPIDs can be set in the device-tree within the nodes that reserve them, so support for setting them in the API is not provided. The pool object can also maintain an internal buffer stockpile to optimize releases and acquires of buffers by specifying the BMAN_POOL_FLAG_STOCKPILE flag - actual releases to and acquires from h/w will only occur when the stockpile needs flushing or replenishing, ensuring that the interactions with hardware occur less often and are always optimized to release/acquire the maximum number of buffers at once. If a pool object is being freed and it has been configured to use stockpiling, a flush operation must be performed on the pool object. This will ensure that all buffers in the stockpile are flushed to h/w. The pool object can then be freed. The stockpiling option is recommended wherever possible. One implementation note is that applications will sometimes want to create multiple pool objects for the same BPID in order to have one for each CPU (for performance reasons) - this means that each pool object will have its own stockpile. As a consequence, to drain a buffer pool empty would require that all pool objects for that BPID be drained independently (whereas without stockpiling enabled, only one pool object needs to be drained).

```
struct bman_pool;
/* This callback type is used when handling pool depletion entry/exit. The
 * 'cb_ctx' value is the opaque value associated with the pool object in
 * bman_new_pool(). 'depleted' is non-zero on depletion-entry, and zero on
 * depletion-exit. */
typedef void (*bman_cb_depletion)(struct bman_portal *bm,
                      struct bman_pool *pool, void *cb_ctx, int depleted);
/* Flags to bman_new_pool() */
#define BMAN_POOL_FLAG_NO_RELEASE    0x00000001 /* can't release to pool */
#define BMAN_POOL_FLAG_ONLY_RELEASE  0x00000002 /* can only release to pool */
#define BMAN_POOL_FLAG_DEPLETION     0x00000004 /* track depletion entry/exit */
#define BMAN_POOL_FLAG_DYNAMIC_BPID  0x00000008 /* (de)allocate bpid */
#define BMAN_POOL_FLAG_THRESH        0x00000010 /* set depletion thresholds */
#define BMAN_POOL_FLAG_STOCKPILE     0x00000020 /* stockpile to reduce hw ops */
/* This struct specifies parameters for a bman_pool object. */
struct bman_pool_params {
        /* index of the buffer pool to encapsulate (0-63), ignored if
         * BMAN_POOL_FLAG_DYNAMIC_BPID is set. */
        u32 bpid;
        /* bit-mask of BMAN_POOL_FLAG_*** options */
        u32 flags;
        /* depletion-entry/exit callback, if BMAN_POOL_FLAG_DEPLETION is set */
        bman_cb_depletion cb;
        /* opaque user value passed as a parameter to 'cb' */
        void *cb_ctx;
        /* depletion-entry/exit thresholds, if BMAN_POOL_FLAG_THRESH is set. NB:
         * this is only allowed if BMAN_POOL_FLAG_DYNAMIC_BPID is used *and*
         * when run in the control plane (which controls BMan CCSR). This array
         * matches the definition of bm_pool_set(). */
        u32 thresholds[4];
};
/**
 * bman_new_pool - Allocates a Buffer Pool object
 * @params: parameters specifying the buffer pool behavior
 *
 * Creates a pool object for the given @params. A portal and the depletion
 * callback field of @params are only used if the BMAN_POOL_FLAG_DEPLETION flag
 * is set. NB, the fields from @params are copied into the new pool object, so
 * the structure provided by the caller can be released or reused after the
 * function returns.
```

```
 */
struct bman_pool *bman_new_pool(const struct bman_pool_params *params);
/**
 * bman_free_pool - Deallocates a Buffer Pool object
 * @pool: the pool object to release
 */
void bman_free_pool(struct bman_pool *pool);
/**
 * bman_flush_stockpile - Flush stockpile buffer(s) to the buffer pool
 * @pool: the buffer pool object the stockpile belongs
 * @flags: bit-mask of BMAN_RELEASE_FLAG_*** options
 *
 * Adds stockpile buffers to RCR entries until the stockpile is empty.
 * The return value will be a negative error code if a h/w error occured.
 * If BMAN_RELEASE_FLAG_NOW flag is passed and RCR ring is full,
 * -EAGAIN will be returned.
 */
int bman_flush_stockpile(struct bman_pool *pool, u32 flags);
/**
 * bman_get_params - Returns a pool object's parameters.
 * @pool: the pool object
 *
 * The returned pointer refers to state within the pool object so must not be
 * modified and can no longer be read once the pool object is destroyed.
 */
const struct bman_pool_params *bman_get_params(const struct bman_pool *pool);
/**
 * bman_query_free_buffers - Query how many free buffers are in buffer pool
 * @pool: the buffer pool object to query
 *
 * Return the number of the free buffers
 */
u32 bman_query_free_buffers(struct bman_pool *pool);
/**
 * bman_update_pool_thresholds - Change the buffer pool's depletion thresholds
 * @pool: the buffer pool object to which the thresholds will be set
 * @thresholds: the new thresholds
 */
int bman_update_pool_thresholds(struct bman_pool *pool, const u32 *thresholds);
```

8.2.3.2.3.1.4 Releasing and Acquiring Buffers

The following API functions allow applications to release buffers to a pool and acquire buffers from a pool. Note that the various "WAIT" flags for bman_release() are only available on linux.

```
/* Flags to bman_release() */
#define BMAN_RELEASE_FLAG_WAIT       0x00000001 /* wait if RCR is full */
#define BMAN_RELEASE_FLAG_WAIT_INT   0x00000002 /* if we wait, interruptible? */
#define BMAN_RELEASE_FLAG_WAIT_SYNC  0x00000004 /* if wait, until consumed? */
/**
 * bman_release - Release buffer(s) to the buffer pool
 * @pool: the buffer pool object to release to
 * @bufs: an array of buffers to release
 * @num: the number of buffers in @bufs (1-8)
 * @flags: bit-mask of BMAN_RELEASE_FLAG_*** options
 *
 * Releases the specified buffers to the buffer pool. If stockpiling is
 * enabled, this may not require a release command to be issued via the RCR
 * ring, otherwise it certainly will. If the RCR ring is full, the function
```

```
 * will return -EBUSY unless BMAN_RELEASE_FLAG_WAIT is selected, in which case
 * it will sleep waiting for space to become available in RCR. If
 * BMAN_RELEASE_FLAG_WAIT_SYNC is also specified then it will sleep until
 * hardware has processed the command from the RCR (otherwise the same
 * information can be obtained by polling bman_rcr_is_empty() until it returns
 * TRUE). If the BMAN_RELEASE_FLAG_WAIT_INT is set), then any sleeps will be
 * interruptible. If it is interrupted before producing the release command, it
 * returns -EINTR. Otherwise, it will return zero to indicate the release was
 * successfully issued. (In the case of interruptible sleeps and WAIT_SYNC,
 * check signal_pending() upon return to determine whether the wait was
 * interrupted.)
 */
int bman_release(struct bman_pool *pool, const struct bm_buffer *bufs,
                                u8 num, u32 flags);
/**
 * bman_acquire - Acquire buffer(s) from a buffer pool
 * @pool: the buffer pool object to acquire from
 * @bufs: array for storing the acquired buffers
 * @num: the number of buffers desired (@bufs is at least this big)
 *
 * Acquires buffers from the buffer pool. If stockpiling is enabled, this may
 * not require an acquire command to be issed via the MC interface, otherwise
 * it certainly will. The return value will be the number of buffers obtained
 * from the pool, or a negative error code if a h/w error or pool starvation
 * was encountered.
 */
int bman_acquire(struct bman_pool *pool, struct bm_buffer *bufs, u8 num,
                        u32 flags);
```

8.2.3.2.3.1.5 Depletion State

It is possible for portals to track depletion state changes to any of the 64 buffer pools supported in BMan. As described in Pool Management, a pool object can invoke callbacks to convey depletion-entry and depletion-exit events if created with the BMAN_POOL_FLAG_DEPLETION flag.

Conversely, software can issue a portal management command to obtain a snapshot of the depletion and availability status of all BMan 64 pools at once, which is what the following interface does. Here "availability" implies that the pool is not completely empty. Depletion on the other hand is relative to the pools depletion-entry and exit-thresholds. The state of all 64 buffer pools is represented by the following structure types, accessor macros, and bman_query_pools() API;

```
struct bm_pool_state {
          [...]
};
/**
 * bman_query_pools - Query all buffer pool states
 * @state: storage for the queried availability and depletion states
 */
int bman_query_pools(struct bm_pool_state *state);
/* Determine the "availability state" of BPID 'p' from a query result 'r' */
#define BM_MCR_QUERY_AVAILABILITY(r,p) [...]
/* Determine the "depletion state" of BPID 'p' from a query result 'r' */
#define BM_MCR_QUERY_DEPLETION(r,p) [...]
```

8.2.3.2.4 Queue Manager

8.2.3.2.4.1 QMan Overview

8.2.3.2.4.1.1 Queue Manager's Function

The QorIQ Queue Manager (QMan) SoC block manages the movement of data (“frames”) along uni-directional flows (“frame queues”) between different software and hardware end-points (“portals”). This allows software instances to communicate with other software instances and/or datapath hardware blocks (CAAM, PME, FMan) using a hardware-managed queueing mechanism. QMan provides a variety of features in the way this data movement can be managed, including tail-drop or weighted-red congestion/flow-control, congestion group depletion notification, order restoration, and order preservation.

It is beyond the scope of this document to fully explain all the QMan-related notions that are essential to using datapath functionality effectively. But unlike the BMan reference, we will cover at least some of the basic elements here that are fundamental to the software interface, because QMan is more complicated than BMan and some simplistic definitions can be helpful as a place to start. For any more information about what QMan does and how it behaves, please consult the appropriate QorIQ SoC Reference Manual.

8.2.3.2.4.1.2 Frame Descriptors

Frames are represented by "frame descriptors" (or "FD"s) which are 16-byte structures consisting of fields to describe;

- contiguous or scatter-gather data,
- a 32-bit per-frame-descriptor token value (called "cmd/status" because of its common usage in processing data to/from hardware blocks),
- trace-debugging bits,
- a partition ID, used for virtualizing memory access to frame data by datapath hardware blocks (CAAM, PME, FMan),
- a BMan buffer pool ID, used to identify frames whose buffers are sourced from (or are to be recycled to) a BMan buffer pool.

A third ("nested") mode of the scatter-gather representation allows a frame-descriptor to reference more than one frame - this is referred to as a *compound frame*, and is a mechanism for creating an indissociable binding of more than one data descriptor, eg. this is used when sending an input descriptor to PME or CAAM and providing an output descriptor to go with it.

Frame descriptors that are under QMan's control reside in QMan-private resources, comprised of dedicated on-board cache as well as system memory assigned to QMan on initialization. When frames are enqueued to (and dequeued from) frame queues by QMan on behalf of software portals or hardware blocks, the frame descriptor fields are copied in to (and out of) these QMan-private resources.

As with BMan not caring whether the 48-bit tokens it manages are real buffer addresses or not, the same is mostly true for QMan with respect to the frame descriptors it manages. QMan ignores the memory addresses present in the frame descriptor, unless it is dequeued via a portal configured for data stashing and is dequeued from a frame queue that is configured for frame data (or annotation) stashing. However QMan always pays attention to the length field of frame descriptors. In general, the only field that can be safely used as a "pass-through" value without any QMan consequences is the 32-bit cmd/status field.

8.2.3.2.4.1.3 Frame Queue Descriptors (QMan)

Frame queues are uni-directional queues of frames, where frames are enqueued to the tail of the frame queue and dequeued from the head. A frame queue is represented in QMan by a "frame queue descriptor" (or "FQD"), and these reside in a private system memory resource configured for QMan on initialization. A frame queue is referred to by a "frame queue identifier" (or "FQID"), which is literally the index of that FQD within QMan's memory resource. As such, FQIDs form a global name-space, even in an otherwise virtualized environment, so two entities of software can not simultaneously use the same FQID for different purposes.

8.2.3.2.4.1.4 Work Queues

Work queues (or "WQ"s) are uni-directional queues of "scheduled" frame queues. We will see shortly what is meant here by a "scheduled" frame queue, but suffice it to say that QMan supports a fixed collection of work queues, to which QMan appends frame

queues when they are due to be serviced. To summarize, multiple FDs can be linked to a single FQ, and multiple FQs can be linked to a single WQ.

8.2.3.2.4.1.5 Channels

A channel is a fixed, hardware-defined association of 8 work queues, also thought of as "priority work queues". This grouping is convenient in that QMan provides sophisticated prioritization support for dequeueing from entire channels rather than specific work queues. Specifically, the 8 work queues within a channel are divided into 3 tiers according to QMan's "class scheduler" logic - work queues 0 and 1 form the high-priority tier and are treated with a strict priority semantic, work queues 2, 3, and 4 form the medium-priority tier and are treated with a weighted interleaved round-robin semantic, and work queues 5, 6, and 7 form the low-priority tier and are also treated with a weighted interleaved round-robin semantic. Apart from the top-tier, the weighting within and between the other two tiers is programmable.

8.2.3.2.4.1.6 Portals

A QMan portal is similar in nature to a BMan portal. There are hardware portals (also called "direct connect portals", or "DCP"s) that allow QMan to be used by other hardware blocks, and there are software portals that allow QMan to be used by logically separated units of software. A software portal consists of two sub-regions of QMan's corenet region, in precisely the same way as with BMan.

8.2.3.2.4.1.7 Dedicated Portal Channels

Each software portal has its own dedicated channel (of 8 work queues), that only it may dequeue from. As a shorthand, one sometimes says that a frame queue is "scheduled to a portal", when what is really meant is that the frame queue is scheduled to a work queue within that portal's *dedicated channel*. Hardware portals also have their own dedicated channels, though sometimes more than one (FMan blocks have multiple dedicated channels).

8.2.3.2.4.1.8 Pool Channels

There are also 15 "pool channels" from which any software portal can dequeue - this is typically used for load-balancing or load-spreading.

8.2.3.2.4.1.9 Portal Sub-Interfaces

Each portal exposes cache-inhibited and cache-enabled registers that can be read and/or written by software to achieve various ends. With some necessary exceptions, the software interface hides most of these details. However an important conceptual point regarding portals is that they have essentially four decoupled sub-interfaces;

- EQCR (EnQueue Command Ring), this is an 8-cacheline ring containing commands from software to QMan. These commands perform enqueues of frame descriptors to frame queues.
- DQRR (DeQueue Response Ring), this is a 16-cacheline ring containing dequeue processing results from QMan to software. These entries usually contain a frame descriptor (except when the dequeue action produced no valid frame descriptor) as well as status information about the dequeue action, the frame queue being dequeued from, and other context for software's use. This ring is unique in that QMan can be configured to stash new ring entries to processor cache, rather than relying on software to (pre)fetch ring entries into cache explicitly.
- MR (Message Ring), this is an 8-cacheline ring containing messages from QMan to software, most notably for enqueue rejection messages and asynchronous retirement processing events. Unlike DQRR, this ring does not support stashing.
- Management commands, consisting of a Command Register (CR) and two Response Register locations (RR0 and RR1), used for issuing a variety of other commands to QMan. EQCR and DQRR (and to a lesser extent, MR) are intended to provide the communications with QMan that represent the fast-path of data processing logic, and the management command interface is where "everything else happens".

8.2.3.2.4.1.10 Frame queue dequeuing

Enqueuing a frame to a frame queue is an unambiguous mechanism; an enqueue command in the EQCR specifies a frame descriptor and a frame queue ID, and the intention is clear. Dequeuing is more subtle, and falls into two general classes depending on *what* one is dequeuing *from* - these are "scheduled" or "unscheduled" dequeues.

8.2.3.2.4.1.10.1 Unscheduled Dequeues

One can dequeue from a specific frame queue, but that frame queue must necessarily be "idle" - or in QMan terminology, "unscheduled". It is an illegal action to attempt to dequeue directly from a frame queue that is in a "scheduled" state. Specifically, unscheduled dequeues require the frame queue to be in the "Parked" or "Retired" state (described in Frame Queue States).

8.2.3.2.4.1.10.2 Scheduled Dequeues

Conversely, if a frame queue is "scheduled" then, by definition, management of the frame queue is (until further notice) under QMan's control and may at any point change state according to events within QMan or via actions on other software or hardware portals. So a "scheduled dequeue" does not target a specific FQ, but either a specific WQ or collection of channels. QMan processes scheduled dequeue commands within a portal by selecting from among the non-empty WQs, dequeueing a FQ from that selected WQ, and then dequeuing a FD from that FQ.

QMan portals implement two dequeue command modes, "push" and "pull";

8.2.3.2.4.1.10.3 Pull Mode

The "pull" mode is the less conventional of the two, as it is driven by software writing a dequeue command to a single cache-inhibited register that will, in response, perform a single instance of that command and publish its result to DQRR. This "pull" command (PDQCR - Pull DeQueue Command Register) could generate anywhere between 1 and 3 DQRR entries, and software must ensure that it does not write a new command to PDQCR until it knows at least one of these DQRR entries has been published (otherwise writing a new command could clobber the previous command before QMan has prepared its execution). The PDQCR command register can perform scheduled and unscheduled dequeues.

8.2.3.2.4.1.10.4 Push Mode

The "push" mode is the mode that gives software a familiar "DMA-style" interface, ie. where hardware performs work and fills in a kind of "Rx ring" autonomously. In the case of the QMan portal's DQRR sub-interface, this push mode is driven by two dequeue command registers, one for scheduled dequeues (SDQCR - Static DeQueue Command Register), and one for unscheduled dequeues (VDQCR - Volatile DeQueue Command Register). The reason for the static/volatile terminology (rather than scheduled/unscheduled), as well as the presence of two command registers instead of one, relates to how QMan schedules execution of the dequeue commands.

Unlike "pull" mode, QMan is not prodded by a write to the command register each time a dequeue command should occur, it must autonomously execute commands when appropriate. So it is clear that scheduled dequeues can only be performed when the targetted work queue or channels have Truly Scheduled frame queues available to dequeue from. Note that this is not an issue with "pull" mode, as a scheduled dequeue command can be issued when there are no available frame queues and QMan will simply publish a DQRR entry containing no frame descriptor to mark completion of the command - for "push" mode, this semantic cannot work. When in "push" mode, the QMan portal has a (possibly NULL) scheduled dequeue command for dequeuing from a selection of available channels. QMan executes this command only when there is matching scheduled dequeue work available on one of of the channels - ie. the scheduled dequeue command (for channels) is *static*. If software writes SDQCR with a command to dequeue from a specific WQ, the command is executed only once (like the pull command), at which point it reverts to the static dequeue command for channels.

For unscheduled dequeues, a single Parked or Retired frame queue is identified for dequeuing, and as QMan does not manipulate the state of such frame queues in reaction to enqueue or dequeue activity (ie. there is no "scheduling"), there is no mechanism for QMan to "know" when this frame queue becomes non-empty some time in the future. So like "pull" mode, unscheduled dequeues must be done when explicitly demanded by software, and as such they must also (a) expire after a configurable number of frame descriptors are dequeued from frame queue or once it is empty, and (b) even if the frame queue is already empty, a DQRR entry with no frame descriptor should be used to notify software that the unscheduled dequeue command has expired. Ie. the unscheduled command "goes live" when written and becomes inactive once completed - it is *volatile*. Unlike "pull" mode however, the volatile command can perform more than a single dequeue action, and it can even block or flow-control while active, however it always runs to completion and then stops.

As "push" mode supports two dequeue commands (in fact one of them, SDQCR, encompasses two commands in its own right - it has a persistent channel-dequeue command, and an optional one-shot workqueue-dequeue command can be issued without

clobbering it), it is worth pointing out that it can service both at once. The VDQCR command register contains a precedence option that QMan uses to determine whether SDQCR or VDQCR work be favoured in the situation where both are active.

8.2.3.2.4.1.10.5 Stashing to Processor Cache

When dequeueing frame queues and publishing entries in DQRR, QMan provides stashing features that involve prepositioning data in the processor cache. The main benefit of hardware-instigated stashing is that the data will already be in cache when the processor needs it, avoiding the need to explicitly prefetch it in advance or stalling the processor to fetch it on-demand. As we will see, there is another benefit in the specific case of DQRR stashing.

Each portal supports two types of stashing, for which distinct PAMU entries are configured.

DLIODN

The DLIODN setting configures PAMU authorization and/or translation of transactions to stash DQRR ring entries as they are produced by QMan. The stashing of DQRR entries is not just a performance tweak, it changes the way driver software operates the portal. Rather than needing to invalidate and prefetch the DQRR cachelines to see (or poll for) new DQRR entries, software can simply reread the cached version until it "magically changes". The stashing transaction is then the only implied traffic across the corenet bus (reducing bandwidth) and it is initiated by hardware at the first instant at which a software-initiated prefetch could have seen anything new (minimum possible latency).

Note that if the driver does not enable DQRR stashing, then it is a requirement to manipulate the processor cache directly, so its run time mode of operation must match device configuration. Note also that if DQRR stashing is used, software can not trust the DQRI interrupt source nor read PI index registers to determine that a new DQRR entry is available, as they may race against the stash transaction. On the other hand, software may use the interrupt source to avoid polling for DQRR production unnecessarily, but it does not guarantee that the first read would show the new DQRR entry.

NOTE

P1023 supports DQRR stashing but since it doesn’t have Corenet and PAMU, the DLIODN is not applicable to P1023.

FLIODN

QMan can also stash per-frame-descriptor information, specifically;

1. Frame data, pointed to by the frame descriptor
2. Frame annotations, which is anything prior to the data due to a non-zero offset
3. Frame queue context (for the frame queue from which the frame descriptor was dequeued).

In all cases, the FLIODN setting is used by PAMU to authorize/translate these stashing transactions.

8.2.3.2.4.1.11 Frame Queue States

Frame queues are managed by QMan via state-transitions, and some of these states are of interest to software. From software's perspective, a simplification of the frame queue states is to group them as follows;

- **Out of service:** the frame queue is not in use and must be initialized. Neither enqueues nor dequeues are permitted.
- **Parked:** the frame queue is initialized and in an idle state. Enqueues are permitted, as are unscheduled dequeues, neither of which change the frame queue's state. Scheduled dequeues will not result in dequeues from parked frame queues, as a parked frame queue is never linked to a work queue.
- **Scheduled:** the frame queue has been scheduled, implying that hardware will modify its state as/when relevant events occur. Enqueues are permitted, but unscheduled dequeus are not. This is not a real state, but actually a set of states that a frame queue moves between - as hardware performs these moves internally, it's useful to treat them as one, because changes between them are asynchronous to software. The real states are;
  - **Tentatively Scheduled:** the frame queue is not linked to a work queue (yet), the frame queue must therefore be empty and no retirement or force-eligible command has been issued against the frame queue.

- **Truly Scheduled:** the frame queue is linked to a work queue, either because it has become non-empty or a force-eligible command has occured.
- **Active:** the frame queue has been selected by a portal for scheduled dequeue and so is removed from the work queue.
- **Held Active:** the frame queue is still held by the portal after scheduled dequeuing has been performed, it may yet be dequeued from again, depending on scheduling configuration, priorities, etc.
- **Held Suspended:** the frame queue is still held by the portal after scheduled dequeuing has been performed but another frame queue has been selected "active" and so no further dequeuing will occur on this frame queue.

- **Retired:** the frame queue is being "closed". A frame queue can be put into the retired state as a means of (a) getting it back under software's control (not under QMan's control nor the control of another hardware block), eg. for closing down "Tx" frame queues, and (b) blocking further enqueues to the frame queue so that it can be drained to empty in a deterministic manner. Enqueues are therefore not permitted in this state. Unscheduled dequeues are permitted, and are the only way to dequeue frames from a frame queue in this state.

See the appropriate QorIQ SoC Reference Manual for more detailed information.

8.2.3.2.4.1.12 Hold active

The QMan portal sub-interfaces are generally decoupled or asynchronous in their operation. For example: The processing of software-produced enqueue commands in EQCR is asynchronous to the processing of dequeue commands into DQRR, and both of these are asynchronous to the production of messages into MR and the processing of management commands.

There is however a specific coupling mechanism between EQCR and DQRR to address a certain class of requirements for datapath processing. Consider first that it is possible for multiple portals to dequeue independently from the same data source, eg. for the purposes of load-balancing, or perhaps idle-time processing of low-priority work. This could occur because multiple portals issue unscheduled dequeue commands from the same Parked (or Retired) frame queue, or because they issue scheduled dequeue commands that target the same pool channels (or the same specific work queue within a pool channel). So we describe here the "hold active" mechanisms that help maintain some synchronicity of hardware dequeue processing (and optionally software *post*-processing) on multiple portals/CPUs.

The unscheduled dequeue case is not covered by the mechanisms described here - QMan will correctly handle multiple unscheduled dequues from the same frame queue, but the "hold active" mechanisms have no effect in this case. For scheduled dequeues however, there are two levels of "hold active" functionality that can be used for software to synchronise multiple portals dequeuing from the same source.

8.2.3.2.4.1.12.1 Dequeue Atomicity

As described in the previous section ("Frame queue states"), the Active, Held Active, and Held Suspended states are for frame queues that have been selected by a portal for *scheduled* dequeuing. These states imply that the frame queue has been detached from the work queue that it was previously "scheduled" to, but not yet moved to the Parked state nor rescheduled to the Tentatively Scheduled or Truly Scheduled state after the completion of dequeuing.

Normally, a frame queue is rescheduled by QMan as soon as it is done dequeuing, potentially even before the resulting DQRR entries are visible to software. However, if the frame queue has been configured for "Held active" behavior, then this will not happen - the frame queue will remain in the Held Active or Held Suspended state once QMan has finished dequeuing from it. QMan will only reschedule or park the frame queue once software consumes all DQRR entries that correspond to that frame queue - the default behavior is to reschedule, but this "held" state of the frame queue allows software an opportunity to request that the final action for the frame queue be to park it instead.

A consequence of this mechanism is that if a DQRR entry is seen that corresponds to a frame queue configured for "held active" behavior, software implicitly knows that there can be no other (unconsumed) DQRR entry on any other portal for that same frame queue. (Proof: if there was, the frame queue would be currently "held" in that portal and not in this one.) For an SMP system where each core has its own portal, this would obviate the need to (spin)lock software context related to a frame queue when handling incoming frames - the "lock" is implicitly obtained when the DQRR entry is seen, and it is implicitly released when the DQRR entries are consumed. This is what is meant by "dequeue atomicity".

8.2.3.2.4.1.12.2 Parking Scheduled FQs

As noted above in Dequeue Atomicity, if a FQ is currently "held active" in the portal, software can request that it be move to the Parked state once its final DQRR entry is consumed, rather than rescheduled which is the normal behavior. This is not necessarily limited to FQs that are configured for "hold active" behavior, but can also be applied to regular FQs by issuing a Force Eligible command on them.

8.2.3.2.4.1.12.3 Order Preservation & Discrete Consumption Acknowledgement

In addition to the dequeue atomicity feature, it is possible to obtain a stronger property from QMan to aid with datapath situations that "spread" incoming data over multiple portals. Specifically, if incoming frames are to be forwarded via subsequent enqueues, then dequeue atomicity does not prevent the forwarded frames from getting out of order. Ie. multiple CPUs (using multiple portals) may be using dequeue atomicity in order to write enqueue commands to their EQCR rings before consuming the DQRR entries, and thus ensuring that EQCR entries are *published* in the same order as the incoming frames. But as there are multiple portals, this does not ensure that QMan will necessarily *process* those EQCR entries in the same order. Indeed if the portals' EQCR rings have significantly varied fill-levels, then there is a reasonable chance that two enqueue commands published in quick succession via different portals could get processed in the opposite order by QMan.

Instead, software can elect to only consume DQRR entries when no forwarding is to be performed on the corresponding frames (eg. when dropping a packet), and for the others, it can encode the EQCR enqueue commands to perform an implicit "Discrete Consumption Acknowledgement" (or "DCA") - the result of which is that QMan will consume the corresponding DQRR entry on software's behalf *once it has finished processing the enqueue command*. This provides a cross-portal, order preservation semantic from end-to-end (from dequeue to enqueue) using hardware assists.

Note, QMan has other functionality called Order Restoration that is completely unrelated to the above - Order Restoration is a mechanism to restore frames into their intended order once they been allowed to get out of order, using sequence numbers and "reassembly windows" within QMan, see Order Restoration. The above "hold active" mechanisms are to prevent frames from getting out of order in the first place.

8.2.3.2.4.1.13 Enqueue Rejections

Enqueues may be rejected, immediately or after any delay due to order restoration, and the enqueue mechanisms themselves do not provide any meaningful way to convey the rejection event to the software portal. For this reason, Enqueue Rejection Notifications (ERNs) are messages received on a message ring that carry frames that did not successfully enqueue together with the reason for their rejection.

8.2.3.2.4.1.14 Order Restoration

Frame queue descriptors can serve one or both of two complimentary purposes. A small subset of fields in the FQDs are used to implement an "Order Restoration Point", which allows an FQD to act as a reassembly window for out-of-sequence enqueues. FQDs also contain a sequence number field that generates increasing sequence numbers for all frames dequeued from the FQ. This dequeue activity sequence number is also called an "Order Definition Point". The idea is that frames dequeued from a given FQ (ODP) may get out-of-sequence during processing before they're enqueued onto an egress FQ, so the enqueue function allows one to not only specify the desination FQD, but also an ORP that the enqueue command should first pass through - which might hold up the intended enqueue until other, missing, sequence elements are enqueued. Ie. an ORP-enabled enqueue command requires 2 FQID parameters, which need not necessarily be the same - indeed in many networking examples, the Rx FQ serves as both the ODP and the ORP when enqueuing to the Tx FQ. To see why this choice of ORP FQ makes sense, consider that many Rx flows may need to be order-restored independently, even if all of them are ultimately enqueued to the same destination Tx FQ. It's also possible to enqueue using software-generated sequence numbers, ie. without any FQ dequeue activity acting as an ODP. An ODP is any source of sequence numbers starting at zero and wrapping to zero at 0x3fff (2^{14}-1).

ORP-enabled enqueue functions provide various features, such as filling in missing sequence numbers (eg. when dropping frames), advancing the "Next Expected Sequence Number" despite missing frames (that may or may not show up later), etc. These features are options in the enqueue interfaces, eg. see Enqueue Command (without ORP), specifically the qman_enqueue_orp() API.

There are also numerous options that can be set in ORP-enabled FQDs, and these are achieved via the same functions that allow you to manipulate FQDs for any other purpose. Eg. see Frame queue management, specifically the qman_init_fq() API. Care should be taken when using a FQD as both a FQ and an ORP - in particular, a FQD can not be retired and put out-of-service while the ORP component of the descriptor is still in use, and vice versa.

8.2.3.2.4.2 QMan configuration interface

The QMan configuration interface is an encapsulation of the QMan CCSR register space and the global/error interrupt source. Whereas QMan portals provide independent channels for accessing QMan functionality, the configuration interface represents the QMan device itself. The QMan configuration interface is presently limited to the device-tree node that represents it.

8.2.3.2.4.2.1 QMan device-tree node

The QMan device tree node represents the QMan device and its CCSR configuration space (as distinct from its corenet portals). When a linux kernel has QMan control support built in, it will react to this device tree node by configuring and managing the QMan device. The device-tree node sits within the CCSR node ("soc") and is of the following form;

```
soc@fe000000 {
        [...]
        qman: qman@318000 {
                compatible = "fsl,qman";
                reg = <0x318000 0x1000>;
                fsl,qman-fqd = <0x0 0x22000000 0x0 0x00200000>;
                fsl,qman-pfdr = <0x0 0x21000000 0x0 0x01000000>;
                fsl,liodn = <0x1f>;
        };
        [...]
  };
```

'compatible' and 'reg' are standard ePAPR properties.

8.2.3.2.4.2.1.1 Frame Queue Descriptors

This property configures the memory used by QMan for storing frame queue descriptors. Each FQD occupies a 64-byte cacheline of memory, so as the above example configures 2MB for FQD memory, the valid range of FQIDs is [1...32767];

```
                fsl,qman-fqd = <0x0 0x22000000 0x0 0x00200000>;
```

The treatment and alignment requirements of this property are the same as in Free Buffer Proxy Records.

8.2.3.2.4.2.1.2 Packed Frame Descriptor Records

This property configures the memory used by QMan for storing Packed Frame Descriptor Records. Each PFDR occupies a 64-byte cacheline of memory, and can hold 3 Frame Descriptors. QMan maintains an onboard cache for holding recently enqueued (and/or soon to be dequeued) frames, and in responsive systems that remain within their operating capacity (ie. no spikes) it can often be unnecessary for frames to ever be stored in system memory at all. However, to handle spikes or buffering, a storage density of 3 enqueued frames per-cacheline can be used for estimating a suitable allocation of memory to QMan for PFDRs. In the case of handling ERNs (eg. if congestion controls exist elsewhere than on an ingress network interface), then a storage density of 1 ERN per-cacheline should be used. The above example configures 16MB for PFDR memory (786,432 enqueued frames, or 262,144 ERNs);

```
                fsl,qman-pfdr = <0x0 0x21000000 0x0 0x01000000>;
```

The treatment and alignment requirements of this property are the same as in Free Buffer Proxy Records.

8.2.3.2.4.2.1.3 Logical I/O Device Number (QMan)

This property is the same as described in Logical I/O Device Number (BMan), but for use by QMan when accessing FQD and PFDR memory (rather than BMan's FBPR memory).

8.2.3.2.4.2.2 QMan pool channel device-tree node

Each QMan software portal has its own dedicated channel of work queues. QMan also provides "pool channels" that all software portals can optionally dequeue from - this is described in Portals. The device-tree should declare pool channels using device-tree nodes as follows;

```
        qman-pool@1 {
                compatible = "fsl,qman-pool-channel";
                    cell-index = <0x1>;
                    fsl,qman-channel-id = <0x21>;
        };
```

8.2.3.2.4.2.2.1 Channel ID

When FQs are initialized for scheduling, the target work queue is identified by the channel id (a hardware-assigned identifier) and by one of the 8 priority levels within that channel. Channel ids are hardware constants, as conveyed by this device-tree property;

```
                    fsl,qman-channel-id = <0x21>;
```

8.2.3.2.4.2.3 QMan portal device-tree node

The QMan Corenet portal interface in QorIQ P4080 provides up to 10 distinct memory-mapped interfaces for use by software to interact efficiently with QMan functionality. These are described in Portals and Portal Sub-Interfaces. Refer to the appropriate SoC reference manuals for non-P4080 specifications.

The QMan driver determines the available corenet portals from the device tree. The portal nodes are at the physical address scope (unlike the device-tree node for the BMan device itself, which is within the "soc" physical address node that represents CCSR). These nodes indicate the physical address ranges of the cache-enabled and cache-inhibited sub-regions of the portal (respectively), and look something like the following;

```
        qman-portal@c000 {
                compatible = "fsl,qman-portal";
                reg = <0xf420c000 0x4000 0xf4303000 0x1000>;
                interrupts = <0x6e 2>;
                interrupt-parent = <&mpic>;
                cell-index = <0x3>;
                cpu-handle = <&cpu3>;
                fsl,qman-channel-id = <0x3>;
                fsl,qman-pool-channels = <&qpool1 &qpool2>;
                fsl,liodn = <0x7 0x8>;
        };
```

As with BMan portal nodes, the "cpu-handle" property is used to express an affinity/association between the given QMan portal and the CPU represented by the referenced device-tree node. Unlike BMan however, the "cpu-handle" property is also used by PAMU configuration, to determine which CPU's L1 or L2 cache should receive stashing transactions emanating from this portal. The "fsl,qman-channel-id" property is already documented in Channel ID, the other QMan-specific portal properties are described below.

8.2.3.2.4.2.3.1 Portal Access to Pool Channels

In QorIQ P4080, P3041, P5020 hardware, all software portals can dequeue from any/all pool channels. Nonetheless, the portal device-tree nodes allow the architect to specify this and optionally limit the range of pool channels a given portal can dequeue from. This can be particularly useful when partitioning multiple guest operating systems, it essentially allows the architect to partition the use of pool channels as they partition the use of portals. In the above example, the portal is only able to dequeue from 2 pool channels;

```
                    fsl,qman-pool-channels = <&qpool1 &qpool2>;
```

8.2.3.2.4.2.3.2 Stashing Logical I/O Device Number

This property, when used in QMan portal nodes, declares two LIODN values for use by QMan when performing dequeue stashing to processor cache. These are documented in Stashing to Processor Cache. This property is filled in automatically by u-boot, and if hypervisor is in use then it will fill in this property for guest device-trees also. PAMU drivers (linux-native or within the hypervisor) will configure the settings for these LIODNs according to the CPU that stashing should be directed towards, as per the cpu-handle property;

```
                    fsl,liodn = <0x7 0x8>;
                    cpu-handle = <&cpu3>;
```

8.2.3.2.4.2.3.3 Portal Initialization (QMan)

The driver is informed of the QMan portals that are available to it via the device-tree passed to the system from the boot process. For those portals that aren't reserved for USDPAA usage via the "fsl,usdpaa-portal" property, it will automatically create TLB entries to map the QMan portal corenet sub-regions as cpu-addressable and cache-inhibited or cache-enabled as appropriate.

As with the BMan driver, the QMan driver will automatically associate initialised QMan portals with the CPU to which they are configured, only one a one-per-CPU basis (if multiple portals are configured for the same CPU, only one is used). Please see Portal sharing for an explanation of this behaviour in the BMan documentation, the QMan behaviour is identical.

8.2.3.2.4.2.3.4 Auto-Initialization

As with the BMan driver, the QMan driver will, by default, automatically initialize QMan portals as they are parsed out of the device-tree. Please see Portal sharing for an explanation of this behavior in the BMan documentation. The QMan behavior is identical.

8.2.3.2.5 QMan portal APIs

The following sections describe interfaces provided by the QMan driver for manipulating portals. These are defined in QMan portal device-tree node, and described in Portals and Portal Sub-Interfaces.

Note, unlike the BMan documentation, we will not include many of the QMan-related data structures within this documentation as they are significantly more elaborate. It is presumed the reader will consult the corresponding header files for structure data details that aren't sufficiently described here.

8.2.3.2.5.1 QMan High-Level Portal Interface

8.2.3.2.5.1.1 Overview (QMan)

The high-level portal interface provides management and encapsulation of a portal hardware interface. The operations performed on the "portal" are coordinated internally, hiding the user from the I/O semantics, and allowing multiple users/contexts to share portals without collaboration between them. This interface also provides an object representation for congestion group records (CGRs), with optional assists for cases where the user wishes to track congestion entry and exit events, eg. to apply back-pressure on the affected frame queues, etc. There is also an object representation for frame queues that internally coordinates FQ operations, demuxes incoming dequeued frames and messages to the corresponding owner's callbacks, and interprets hardware-provided indications of changes to FQ state.

This interface provides locking and arbitration of portal operations from multiple software contexts and/or threads (ie. the portal is shared). In cases where a resource is busy, the interface also gives callers the option of blocking/sleeping until the resouce is available (and in the case of volatile dequeue commands, the caller may also optionally sleep until the volatile dequeue command has finished). In any case where sleeping is an option, the caller can also specify whether the sleep should be interruptible.

NOTE

Support for blocking/sleeping is limited to Linux, it is not available on run-to-completion systems such as USDPAA.

The demux logic within the portal interface assumes ownership of the "contextB" field of frame queue descriptors (FQDs), so users of this interface can not modify this field. However, callers provide the cache line of memory to be used within the driver for each FQ object when calling qman_create_fq(), so they can extend this structure into adjacent cachelines with their own data and use this instead of contextB for their own purposes. Ie. when callbacks are invoked because of dequeued frames, enqueue

rejections, or retirement notifications, those callbacks will find their custom per-FQ data adjacent to the FQ object pointer they are passed. Moreover, if context-stashing is enabled for the portal and the FQD is configured to stash 1 or more cachelines of context, the QMan driver's demux function will be implicitly accelerated because the FQ object will be prefetched into processor cache. Any adjacent data that is covered by the FQ's stashing configuration could likewise lead to acceleration of the owner's dequeue callbacks, ie. by reducing or eliminating cache misses in fast-path processing.

8.2.3.2.5.1.2 Frame and Message Handling

When DQRR or MR ring entries are produced by hardware to software, callbacks that have been provided by the API user are invoked to allow those entries to be handled prior to the driver consuming them. These callbacks are provided in the 'qman_fq_cb' structure type.

```
struct qman_fq_cb {
          qman_cb_dqrr dqrr; /* for dequeued frames */
          qman_cb_mr ern;          /* for software ERNs */
          qman_cb_mr dc_ern; /* for diverted hardware ERNs */
          qman_cb_mr fqr;           /* retirement messages */
};
typedef enum qman_cb_dqrr_result (*qman_cb_dqrr)(struct qman_portal *qm,
                                struct qman_fq *fq, const struct qm_dqrr_entry *dqrr);
typedef void (*qman_cb_mr)(struct qman_portal *qm, struct qman_fq *fq,
                                const struct qm_mr_entry *msg);
enum qman_cb_dqrr_result {
          /* DQRR entry can be consumed */
          qman_cb_dqrr_consume,
          /* Like _consume, but requests parking - FQ must be held-active */
          qman_cb_dqrr_park,
          /* Does not consume, for DCA mode only. This allows out-of-order
           * consumes by explicit calls to qman_dca() and/or the use of implicit
           * DCA via EQCR entries. */
          qman_cb_dqrr_defer
};
```

8.2.3.2.5.1.3 Portal management (QMan)

The portal management API provides qman_affine_cpus(), which returns a mask that indicates which CPUs have auto-initialiazed portals associated with them. See QMan portal device-tree node. All other QMan API functions must be executed on CPUs contained within this mask, and any interactions they require with h/w will be performed on the corresponding portals.

```
/**
 * qman_affine_cpus - return a mask of cpus that have portal access
 */
const cpumask_t *qman_affine_cpus(void);
```

8.2.3.2.5.1.3.1 Modifying interrupt-driven portal duties (QMan)

Portals have various servicing duties they must perform in reaction to hardware events. The portal management API allows applications to control which of these duties/events are triggered by interrupt-handling versus those which are performed at the application's explicit request via qman_poll() (or more specifically, via qman_poll_dqrr() and qman_poll_slow()). If portal-sharing is in effect (see Portal sharing), these APIs won't succeed when called from a slave CPU.

```
#define QM_PIRQ_CSCI    0x00100000      /* Congestion State Change */
#define QM_PIRQ_EQCI    0x00080000      /* Enqueue Command Committed */
#define QM_PIRQ_EQRI    0x00040000      /* EQCR Ring (below threshold) */
#define QM_PIRQ_DQRI    0x00020000      /* DQRR Ring (non-empty) */
#define QM_PIRQ_MRI     0x00010000      /* MR Ring (non-empty) */
#define QM_PIRQ_SLOW    (QM_PIRQ_CSCI | QM_PIRQ_EQCI | QM_PIRQ_EQRI | \
                         QM_PIRQ_MRI)
```

```
/**
 * qman_irqsource_get - return the portal work that is interrupt-driven
 *
 * Returns a bitmask of QM_PIRQ_**I processing sources that are currently
 * enabled for interrupt handling on the current cpu's affine portal. These
 * sources will trigger the portal interrupt and the interrupt handler (or a
 * tasklet/bottom-half it defers to) will perform the corresponding processing
 * work. The qman_poll_***() functions will only process sources that are not in
 * this bitmask. If the current CPU is sharing a portal hosted on another CPU,
 * this always returns zero.
 */
u32 qman_irqsource_get(void);
/**
 * qman_irqsource_add - add processing sources to be interrupt-driven
 * @bits: bitmask of QM_PIRQ_**I processing sources
 *
 * Adds processing sources that should be interrupt-driven (rather than
* processed via qman_poll_***() functions). Returns zero for success, or
* -EINVAL if the current CPU is sharing a portal hosted on another CPU.
*/
int qman_irqsource_add(u32 bits);
/**
* qman_irqsource_remove - remove processing sources from being interrupt-driven
* @bits: bitmask of QM_PIRQ_**I processing sources
*
* Removes processing sources from being interrupt-driven, so that they will
* instead be processed via qman_poll_***() functions. Returns zero for success,
* or -EINVAL if the current CPU is sharing a portal hosted on another CPU.
*/
int qman_irqsource_remove(u32 bits);
```

8.2.3.2.5.1.3.2 Processing non-interrupt-driven portal duties (QMan)

If portal-sharing is in effect (see Portal sharing), these APIs won't succeed when called from a slave CPU.

```
/**
* qman_poll_dqrr - process DQRR (fast-path) entries
* @limit: the maximum number of DQRR entries to process
*
* Use of this function requires that DQRR processing not be interrupt-driven.
* Ie. the value returned by qman_irqsource_get() should not include
* QM_PIRQ_DQRI. If the current CPU is sharing a portal hosted on another CPU,
* this function will return -EINVAL, otherwise the return value is >=0 and
* represents the number of DQRR entries processed.
*/
int qman_poll_dqrr(unsigned int limit);
/**
QMan Portal APIs
QMan, BMan API RM, Rev. 0.13
6-34 NXP Confidential Proprietary NXP Semiconductors
Preliminary—Subject to Change Without Notice
* qman_poll_slow - process anything (except DQRR) that isn't interrupt-driven.
*
* This function does any portal processing that isn't interrupt-driven. If the
* current CPU is sharing a portal hosted on another CPU, this function will
* return -EINVAL, otherwise returns zero for success.
*/
void qman_poll_slow(void);
/**
```

```
 * qman_poll - legacy wrapper for qman_poll_dqrr() and qman_poll_slow()
 *
 * Dispatcher logic on a cpu can use this to trigger any maintenance of the
 * affine portal. There are two classes of portal processing in question;
 * fast-path (which involves demuxing dequeue ring (DQRR) entries and tracking
 * enqueue ring (EQCR) consumption), and slow-path (which involves EQCR
 * thresholds, congestion state changes, etc). This function does whatever
 * processing is not triggered by interrupts.
 *
 * Note, if DQRR and some slow-path processing are poll-driven (rather than
 * interrupt-driven) then this function uses a heuristic to determine how often
 * to run slow-path processing - as slow-path processing introduces at least a
 * minimum latency each time it is run, whereas fast-path (DQRR) processing is
 * close to zero-cost if there is no work to be done. Applications can tune this
 * behavior themselves by using qman_poll_dqrr() and qman_poll_slow() directly
 * rather than going via this wrapper.
 */
void qman_poll(void);
```

8.2.3.2.5.1.3.3 Recovery support (QMan)

Note that the following functions require the QMan portal to have been initialized in "recovery mode", which is not possible with the current release. As such, these functions are for future use only (and documented here only because they're declared in the API header).

```
/**
 * qman_recovery_cleanup_fq - in recovery mode, cleanup a FQ of unknown state
 */
int qman_recovery_cleanup_fq(u32 fqid);
/**
 * qman_recovery_exit - leave recovery mode
 */
int qman_recovery_exit(void);
```

8.2.3.2.5.1.3.4 Stopping and restarting dequeues to the portal

```
/**
 * qman_stop_dequeues - Stop h/w dequeuing to the s/w portal
 *
 * Disables DQRR processing of the portal. This is reference-counted, so
 * qman_start_dequeues() must be called as many times as qman_stop_dequeues() to
 * truly re-enable dequeuing.
 */
void qman_stop_dequeues(void);
/**
 * qman_start_dequeues - (Re)start h/w dequeuing to the s/w portal
 *
 * Enables DQRR processing of the portal. This is reference-counted, so
 * qman_start_dequeues() must be called as many times as qman_stop_dequeues() to
 * truly re-enable dequeuing.
 */
void qman_start_dequeues(void);
```

8.2.3.2.5.1.3.5 Manipulating the portal static dequeue command

```
/**
 * qman_static_dequeue_add - Add pool channels to the portal SDQCR
```

```
 * @pools: bit-mask of pool channels, using QM_SDQCR_CHANNELS_POOL(n)
 *
 * Adds a set of pool channels to the portal's static dequeue command register
 * (SDQCR). The requested pools are limited to those the portal has dequeue
 * access to.
 */
void qman_static_dequeue_add(u32 pools);
/**
 * qman_static_dequeue_del - Remove pool channels from the portal SDQCR
 * @pools: bit-mask of pool channels, using QM_SDQCR_CHANNELS_POOL(n)
 *
 * Removes a set of pool channels from the portal's static dequeue command
 * register (SDQCR). The requested pools are limited to those the portal has
 * dequeue access to.
 */
void qman_static_dequeue_del(u32 pools);
/**
 * qman_static_dequeue_get - return the portal's current SDQCR
 *
 * Returns the portal's current static dequeue command register (SDQCR). The
 * entire register is returned, so if only the currently-enabled pool channels
 * are desired, mask the return value with QM_SDQCR_CHANNELS_POOL_MASK.
 */
u32 qman_static_dequeue_get(void);
```

8.2.3.2.5.1.3.6 Determining if the enqueue ring is empty

```
/**
 * qman_eqcr_is_empty - Determine if portal's EQCR is empty
 *
 * For use in situations where a cpu-affine caller needs to determine when all
 * enqueues for the local portal have been processed by QMan but can't use the
 * QMAN_ENQUEUE_FLAG_WAIT_SYNC flag to do this from the final qman_enqueue().
 * The function forces tracking of EQCR consumption (which normally doesn't
 * happen until enqueue processing needs to find space to put new enqueue
 * commands), and returns zero if the ring still has unprocessed entries,
 * non-zero if it is empty.
 */
int qman_eqcr_is_empty(void);
```

8.2.3.2.5.1.4 Frame queue management

Frame queue objects are stored in memory provided by the caller, which makes the API for this object representation a little peculiar at first sight. The motivating factors are memory management and stashing of frame queue context. Another factor is that frame queue objects are the only objects in the QMan (or BMan) high level interfaces that are essentially arbitrary in number, so having the caller provide storage relieves the driver of having to know the best allocation scheme for all applications.

The qman_create_fq() API creates a new frame queue object, using the caller-supplied storage, and in which the caller has already configured the callback functions to be used for handling hardware-produced data - namely, DQRR entries and MR entries, the latter divided according to the type of message (software-enqueue rejections, hardware-enqueue rejections, or frame queue state changes).

```
#define QMAN_FQ_FLAG_NO_ENQUEUE      0x00000001 /* can't enqueue */
#define QMAN_FQ_FLAG_NO_MODIFY       0x00000002 /* can only enqueue */
#define QMAN_FQ_FLAG_TO_DCPORTAL     0x00000004 /* consumed by CAAM/PME/FMan */
#define QMAN_FQ_FLAG_LOCKED          0x00000008 /* multi-core locking */
#define QMAN_FQ_FLAG_AS_I            0x00000010 /* query h/w state */
```

```
#define QMAN_FQ_FLAG_DYNAMIC_FQID    0x00000020 /* (de)allocate fqid */
struct qman_fq {
        /* Caller of qman_create_fq() provides these demux callbacks */
        struct qman_fq_cb {
                qman_cb_dqrr dqrr;      /* for dequeued frames */
                qman_cb_mr ern;         /* for s/w ERNs */
                qman_cb_mr dc_ern;      /* for diverted h/w ERNs */
                qman_cb_mr fqs;         /* frame-queue state changes*/
        } cb;
          /* Internal to the driver, don't touch. */
          [...]
};
/**
 * qman_create_fq - Allocates a FQ
 * @fqid: the index of the FQD to encapsulate, must be "Out of Service"
 * @flags: bit-mask of QMAN_FQ_FLAG_*** options
 * @fq: memory for storing the 'fq', with callbacks filled in
 *
 * Creates a frame queue object for the given @fqid, unless the
 * QMAN_FQ_FLAG_DYNAMIC_FQID flag is set in @flags, in which case a FQID is
 * dynamically allocated (or the function fails if none are available). Once
 * created, the caller should not touch the memory at 'fq' except as extended to

 * adjacent memory for user-defined fields (see the definition of "struct
 * qman_fq" for more info). NO_MODIFY is only intended for enqueuing to
 * pre-existing frame-queues that aren't to be otherwise interfered with, it
 * prevents all other modifications to the frame queue. The TO_DCPORTAL flag
 * causes the driver to honour any contextB modifications requested in the
 * qm_init_fq() API, as this indicates the frame queue will be consumed by a
 * direct-connect portal (PME, CAAM, or FMan). When frame queues are consumed by

 * software portals, the contextB field is controlled by the driver and can't be

 * modified by the caller. If the AS_SI flag is specified, management commands
 * will be used on portal @p to query state for frame queue @fqid and construct
 * a frame queue object based on that, rather than assuming/requiring that it be
 * Out of Service.
 */
int qman_create_fq(u32 fqid, u32 flags, struct qman_fq *fq);
#define QMAN_FQ_DESTROY_PARKED       0x00000001 /* FQ can be parked or OOS */
/**
 * qman_destroy_fq - Deallocates a FQ
 * @fq: the frame queue object to release
 * @flags: bit-mask of QMAN_FQ_DESTROY_*** options
 *
 * The memory for this frame queue object ('fq' provided in qman_create_fq()) is
 * not deallocated but the caller regains ownership, to do with as desired. The
 * FQ must be in the 'out-of-service' state unless the QMAN_FQ_DESTROY_PARKED
 * flag is specified, in which case it may also be in the 'parked' state.
 */
void qman_destroy_fq(struct qman_fq *fq, u32 flags);
```

8.2.3.2.5.1.4.1 Querying a FQ object

The following functions do not interact with h/w, they simply return the state that the QMan driver tracks within the FQ object.

```
/**
 * qman_fq_fqid - Queries the frame queue ID of a FQ object
 * @fq: the frame queue object to query
 */
```

```
u32 qman_fq_fqid(struct qman_fq *fq);
enum qman_fq_state {
        qman_fq_state_oos,
        qman_fq_state_parked,
        qman_fq_state_sched,
        qman_fq_state_retired
};
#define QMAN_FQ_STATE_CHANGING       0x80000000 /* 'state' is changing */
#define QMAN_FQ_STATE_NE             0x40000000 /* retired FQ isn't empty */
#define QMAN_FQ_STATE_ORL            0x20000000 /* retired FQ has ORL */
#define QMAN_FQ_STATE_BLOCKOOS       0xe0000000 /* if any are set, no OOS */
#define QMAN_FQ_STATE_CGR_EN         0x10000000 /* CGR enabled */
/**
 * qman_fq_state - Queries the state of a FQ object
 * @fq: the frame queue object to query
 * @state: pointer to state enum to return the FQ scheduling state
 * @flags: pointer to state flags to receive QMAN_FQ_STATE_*** bitmask
 *
 * Queries the state of the FQ object, without performing any h/w commands.
 * This captures the state, as seen by the driver, at the time the function
 * executes.
 */
void qman_fq_state(struct qman_fq *fq, enum qman_fq_state *state, u32 *flags);
```

8.2.3.2.5.1.4.2 Initialize a FQ

The qman_init_fq() API requires that the caller fill in the details of the Initialize FQ command that they desire, and uses the 'struct qm_mcc_initfq' structure type to this end. This structure is quite elaborate, please consult the API header file and SDK examples for more informatoin.

```
#define QMAN_INITFQ_FLAG_SCHED       0x00000001 /* schedule rather than park */
#define QMAN_INITFQ_FLAG_NULL        0x00000002 /* zero 'contextB', no demux */
#define QMAN_INITFQ_FLAG_LOCAL       0x00000004 /* set dest portal */
/**
 * qman_init_fq - Initialises FQ fields, leaves the FQ "parked" or "scheduled"
 * @fq: the frame queue object to modify, must be 'parked' or new.
 * @flags: bit-mask of QMAN_INITFQ_FLAG_*** options
 * @opts: the FQ-modification settings, as defined in the low-level API
 *
 * @opts: the FQ-modification settings
*
* Select QMAN_INITFQ_FLAG_SCHED in @flags to cause the frame queue to be
* scheduled rather than parked. Select QMAN_INITFQ_FLAG_NULL in @flags to
* configure a frame queue that will not demux to a 'struct qman_fq' object when
* dequeued frames or messages arrive at a software portal, but which will
* instead trigger the portal's 'null_cb' callbacks (see qman_create_portal()).
* NB, @opts can be NULL.
 *
 * Note that some fields and options within @opts may be ignored or overwritten
 * by the driver;
 * 1. the 'count' and 'fqid' fields are always ignored (this operation only
 * affects one frame queue: @fq).
 * 2. the QM_INITFQ_WE_CONTEXTB option of the 'we_mask' field and the associated
 * 'fqd' structure's 'context_b' field are sometimes overwritten;
 *   - if @flags contains QMAN_INITFQ_FLAG_NULL, then context_b is initialized
 *     to zero by the driver,
 *   - if @fq was not created with QMAN_FQ_FLAG_TO_DCPORTAL, then context_b is
 *     initialized to a value used by the driver for demux.
 *   - if context_b is initialized for demux, so is context_a in case stashing
```

```
 *     is requested (see item 4).
 * (So caller control of context_b is only possible for TO_DCPORTAL frame queue
 * objects.)
 * 3. if @flags contains QMAN_INITFQ_FLAG_LOCAL, the 'fqd' structure's
 * 'dest::channel' field will be overwritten to match the portal used to issue
 * the command. If the WE_DESTWQ write-enable bit had already been set by the
 * caller, the channel workqueue will be left as-is, otherwise the write-enable
 * bit is set and the workqueue is set to a default of 4. If the "LOCAL" flag
 * isn't set, the destination channel/workqueue fields and the write-enable bit
 * are left as-is.
 * 4. if the driver overwrites context_a/b for demux, then if
 * QM_INITFQ_WE_CONTEXTA is set, the driver will only overwrite
 * context_a.address fields and will leave the stashing fields provided by the
 * user alone, otherwise it will zero out the context_a.stashing fields.
 */
int qman_init_fq(struct qman_fq *fq, u32 flags, struct qm_mcc_initfq *opts);
```

8.2.3.2.5.1.4.3 Schedule a FQ

```
/**
 * qman_schedule_fq - Schedules a FQ
 * @fq: the frame queue object to schedule, must be 'parked'
 *
 * Schedules the frame queue, which must be Parked, which takes it to
 * Tentatively-Scheduled or Truly-Scheduled depending on its fill-level.
 */
int qman_schedule_fq(struct qman_fq *fq);
```

8.2.3.2.5.1.4.4 Retire a FQ

```
/**
 * qman_retire_fq - Retires a FQ
 * @fq: the frame queue object to retire
 * @flags: FQ flags (as per qman_fq_state) if retirement completes immediately
 *
 * Retires the frame queue. This returns zero if it succeeds immediately, +1 if
 * the retirement was started asynchronously, otherwise it returns negative for
 * failure. When this function returns zero, @flags is set to indicate whether
 * the retired FQ is empty and/or whether it has any ORL fragments (to show up
 * as ERNs). Otherwise the corresponding flags will be known when a subsequent
 * FQRN message shows up on the portal's message ring.
 *
 * NB, if the retirement is asynchronous (the FQ was in the Truly Scheduled or
 * Active state), the completion will be via the message ring as a FQRN - but
 * the corresponding callback may occur before this function returns!! Ie. the
 * caller should be prepared to accept the callback as the function is called,
 * not only once it has returned.
 */
int qman_retire_fq(struct qman_fq *fq, u32 *flags);
```

8.2.3.2.5.1.4.5 Put a FQ out of service

```
/**
 * qman_oos_fq - Puts a FQ "out of service"
 * @fq: the frame queue object to be put out-of-service, must be 'retired'
 *
 * The frame queue must be retired and empty, and if any order restoration list
```

```
 * was released as ERNs at the time of retirement, they must all be consumed.
 */
int qman_oos_fq(struct qman_fq *fq);
```

8.2.3.2.5.1.4.6 Query a FQD from QMan

The following functions perform query commands via the QMan software portal to obtain information about the FQD corresponding to the given FQ object. The data structures used by the query are quite elaborate, please consult the API header file and SDK examples for more information.

```
/**
 * qman_query_fq - Queries FQD fields (via h/w query command)
 * @fq: the frame queue object to be queried
 * @fqd: storage for the queried FQD fields
 */
int qman_query_fq(struct qman_fq *fq, struct qm_fqd *fqd);
/**
 * qman_query_fq_np - Queries non-programmable FQD fields
 * @fq: the frame queue object to be queried
 * @np: storage for the queried FQD fields
 */
int qman_query_fq_np(struct qman_fq *fq, struct qm_mcr_queryfq_np *np);
```

8.2.3.2.5.1.4.7 Unscheduled (volatile) dequeuing of a FQ

```
#define QMAN_VOLATILE_FLAG_WAIT      0x00000001 /* wait if VDQCR is in use */
#define QMAN_VOLATILE_FLAG_WAIT_INT  0x00000002 /* if wait, interruptible? */
#define QMAN_VOLATILE_FLAG_FINISH    0x00000004 /* wait till VDQCR completes */
/**
 * qman_volatile_dequeue - Issue a volatile dequeue command
 * @fq: the frame queue object to dequeue from (or NULL)
 * @flags: a bit-mask of QMAN_VOLATILE_FLAG_*** options
 * @vdqcr: bit mask of QM_VDQCR_*** options, as per qm_dqrr_vdqcr_set()
 *
 * Attempts to lock access to the portal's VDQCR volatile dequeue functionality.
 * The function will block and sleep if QMAN_VOLATILE_FLAG_WAIT is specified and
 * the VDQCR is already in use, otherwise returns non-zero for failure. If
 * QMAN_VOLATILE_FLAG_FINISH is specified, the function will only return once
 * the VDQCR command has finished executing (ie. once the callback for the last
 * DQRR entry resulting from the VDQCR command has been called). If @fq is
 * non-NULL, the corresponding FQID will be substituted in to the VDQCR command,
 * otherwise it is assumed that @vdqcr already contains the FQID to dequeue
 * from.
 */
int qman_volatile_dequeue(struct qman_fq *fq, u32 flags, u32 vdqcr)
```

8.2.3.2.5.1.4.8 Set FQ flow control state

```
/**
 * qman_fq_flow_control - Set the XON/XOFF state of a FQ
 * @fq: the frame queue object to be set to XON/XOFF state, must not be 'oos',
 * or 'retired' or 'parked' state
 * @xon: boolean to set fq in XON or XOFF state
 *
 * The frame should be in Tentatively Scheduled state or Truly Schedule sate,
 * otherwise the IFSI interrupt will be asserted.
```

```
 */
int qman_fq_flow_control(struct qman_fq *fq, int xon);
```

8.2.3.2.5.1.5 Enqueue Command (without ORP)

```
#define QMAN_ENQUEUE_FLAG_WAIT       0x00010000 /* wait if EQCR is full */
#define QMAN_ENQUEUE_FLAG_WAIT_INT   0x00020000 /* if wait, interruptible? */
#define QMAN_ENQUEUE_FLAG_WAIT_SYNC  0x00000004 /* if wait, until consumed? */
#define QMAN_ENQUEUE_FLAG_WATCH_CGR  0x00080000 /* watch congestion state */
#define QMAN_ENQUEUE_FLAG_DCA        0x00008000 /* perform enqueue-DCA */
#define QMAN_ENQUEUE_FLAG_DCA_PARK   0x00004000 /* If DCA, requests park */
#define QMAN_ENQUEUE_FLAG_DCA_PTR(p)            /* If DCA, p is DQRR entry */ \
                (((u32)(p) << 2) & 0x00000f00)
#define QMAN_ENQUEUE_FLAG_C_GREEN    0x00000000 /* choose one C_*** flag */
#define QMAN_ENQUEUE_FLAG_C_YELLOW   0x00000008
#define QMAN_ENQUEUE_FLAG_C_RED      0x00000010
#define QMAN_ENQUEUE_FLAG_C_OVERRIDE 0x00000018
/**
 * qman_enqueue - Enqueue a frame to a frame queue
 * @fq: the frame queue object to enqueue to
 * @fd: a descriptor of the frame to be enqueued
 * @flags: bit-mask of QMAN_ENQUEUE_FLAG_*** options
 *
 * Fills an entry in the EQCR of portal @qm to enqueue the frame described by
 * @fd. The descriptor details are copied from @fd to the EQCR entry, the 'pid'
 * field is ignored. The return value is non-zero on error, such as ring full
 * (and FLAG_WAIT not specified), congestion avoidance (FLAG_WATCH_CGR
 * specified), etc. If the ring is full and FLAG_WAIT is specified, this
 * function will block. If FLAG_INTERRUPT is set, the EQCI bit of the portal
 * interrupt will assert when QMan consumes the EQCR entry (subject to "status
 * disable", "enable", and "inhibit" registers). If FLAG_DCA is set, QMan will
 * perform an implied "discrete consumption acknowledgement" on the dequeue
 * ring's (DQRR) entry, at the ring index specified by the FLAG_DCA_IDX(x)
 * macro. (As an alternative to issuing explicit DCA actions on DQRR entries,
 * this implicit DCA can delay the release of a "held active" frame queue
 * corresponding to a DQRR entry until QMan consumes the EQCR entry - providing
 * order-preservation semantics in packet-forwarding scenarios.) If FLAG_DCA is
 * set, then FLAG_DCA_PARK can also be set to imply that the DQRR consumption
 * acknowledgement should "park request" the "held active" frame queue. Ie.
 * when the portal eventually releases that frame queue, it will be left in the
 * Parked state rather than Tentatively Scheduled or Truly Scheduled. If the
 * portal is watching congestion groups, the QMAN_ENQUEUE_FLAG_WATCH_CGR flag
 * is requested, and the FQ is a member of a congestion group, then this
 * function returns -EAGAIN if the congestion group is currently congested.
 * Note, this does not eliminate ERNs, as the async interface means we can be
 * sending enqueue commands to an un-congested FQ that becomes congested before
 * the enqueue commands are processed, but it does minimise needless thrashing
 * of an already busy hardware resource by throttling many of the to-be-dropped
 * enqueues "at the source".
 */
int qman_enqueue(struct qman_fq *fq, const struct qm_fd *fd, u32 flags);
```

8.2.3.2.5.1.6 Enqueue Command with ORP

```
/* Same flags as qman_enqueue(), with the following additions;

 * - this flag indicates "Not Last In Sequence", ie. all but the final fragment
```

```
 *   of a frame. */
#define QMAN_ENQUEUE_FLAG_NLIS       0x01000000
/* - this flag performs no enqueue but fills in an ORP sequence number that
 *   would otherwise block it (eg. if a frame has been dropped). */
#define QMAN_ENQUEUE_FLAG_HOLE       0x02000000
/* - this flag performs no enqueue but advances NESN to the given sequence
 *   number. */
#define QMAN_ENQUEUE_FLAG_NESN       0x04000000
/*
 * qman_enqueue_orp - Enqueue a frame to a frame queue using an ORP
 * @fq: the frame queue object to enqueue to
 * @fd: a descriptor of the frame to be enqueued
 * @flags: bit-mask of QMAN_ENQUEUE_FLAG_*** options
 * @orp: the frame queue object used as an order restoration point.
 * @orp_seqnum: the sequence number of this frame in the order restoration path
 *
 * Similar to qman_enqueue(), but with the addition of an Order Restoration
 * Point (@orp) and corresponding sequence number (@orp_seqnum) for this
 * enqueue operation to employ order restoration. Each frame queue object acts
 * as an Order Definition Point by providing each frame dequeued from it
 * with an incrementing sequence number, this value is generally ignored unless
 * that sequence of dequeued frames will need order restoration later. Each
 * frame queue object also encapsulates an Order Restoration Point (ORP), which
 * is a re-assembly context for re-ordering frames relative to their sequence
 * numbers as they are enqueued. The ORP does not have to be within the frame
 * queue that receives the enqueued frame, in fact it is usually the frame
 * queue from which the frames were originally dequeued. For the purposes of
 * order restoration, multiple frames (or "fragments") can be enqueued for a
 * single sequence number by setting the QMAN_ENQUEUE_FLAG_NLIS flag for all
 * enqueues except the final fragment of a given sequence number.  Ordering
 * between sequence numbers is guaranteed, even if fragments of different
 * sequence numbers are interlaced with one another. Fragments of the same
 * sequence number will retain the order in which they are enqueued. If no
 * enqueue is to performed, QMAN_ENQUEUE_FLAG_HOLE indicates that the given
 * sequence number is to be "skipped" by the ORP logic (eg. if a frame has been
 * dropped from a sequence), or QMAN_ENQUEUE_FLAG_NESN indicates that the given
 * sequence number should become the ORP's "Next Expected Sequence Number".
 *
 * Side note: a frame queue object can be used purely as an ORP, without
 * carrying any frames at all. Care should be taken not to deallocate a frame
 * queue object that is being actively used as an ORP, as a future allocation
 * of the frame queue object may start using the internal ORP before the
 * previous use has finished.
 */
int qman_enqueue_orp(struct qman_fq *fq, const struct qm_fd *fd, u32 flags,

                                struct qman_fq *orp, u16 orp_seqnum);
```

8.2.3.2.5.1.7 DCA Mode

As described in Order Preservation & Discrete Consumption Acknowledgement, FQs initialized for "hold active" behavior can have order-preservation behavior if their DQRR entries are consumed either by implicit DCA in the enqueue command when forwarding, or by explicit DCA if the frame is not going to be forwarded. The implicit DCA via enqueue is described in Enqueue Command (without ORP), this section describes the API for performing an explicit DCA on a DQRR entry. As with the implicit DCA via enqueue, explicit DCA commands also allow the caller to specify that the FQ be Parked rather than rescheduled once all its DQRR entries are consumed.

```
/**
 * qman_dca - Perform a Discrete Consumption Acknowledgement
```

```
 * @dq: the DQRR entry to be consumed
 * @park_request: indicates whether the held-active @fq should be parked
 *
 * Only allowed in DCA-mode portals, for DQRR entries whose handler callback had
 * previously returned 'qman_cb_dqrr_defer'. NB, as with the other APIs, this
 * does not take a 'portal' argument but implies the core affine portal from the

 * cpu that is currently executing the function. For reasons of locking, this
 * function must be called from the same CPU as that which processed the DQRR
 * entry in the first place.
 */
void qman_dca(struct qm_dqrr_entry *dq, int park_request);
```

8.2.3.2.5.1.8 Congestion Management Records

QMan supports a fixed number[10] of built-in resources called Congestion Group Records (CGRs), that can be used as containers for related frame queues that should collectively benefit from congestion management. The precise algorithms used for congestion management with these records is beyond the scope of the document, please see the Queue Manager section of the appropraite QorIQ SoC Reference Manual for details.

The CGR kernel structure enables access to the CGR hardware functionality. Each object refers to an underlining hardware record via the cgrid field. Many CGR object may reference the same cgrid, but care must be taken when this object resides on different cores as no inter-core protection is provided.

The init frame queue functionality allows the caller to associate a CGR with the associated frame queue. The interface permits the management and modification of the underlining CGRs and notifies the user of congestion state changed. The current interface does not provide a mechanism to manage CGR ids. The application software is expected to arbitrate use of CGR ids.

```
/* Flags to qman_modify_cgr() */
#define QMAN_CGR_FLAG_USE_INIT       0x00000001
/**
 * This is a qman cgr callback function which gets invoked when the
typedef void (*qman_cb_cgr)(struct qman_portal *qm,
           struct qman_cgr *cgr, int congested);
struct qman_cgr {
          /* Set these prior to qman_create_cgr() */
          u32 cgrid; /* 0..255 */
          qman_cb_cgr cb;
          enum qm_channel chan; /* portal channel this object is created on */
          struct list_head node;
};
/* When Weighted Random Early Discard (WRED) is used then the following
 * structure is used to configure the WRED parameters. Refer to the QMan
 * Block Guide for a detailed description of the various parameters.
 */
struct qm_cgr_wr_parm {
          union {
                    u32 word;
                    struct {
                              u32 MA:8;
                              u32 Mn:5;
                              u32 SA:7; /* must be between 64-127 */
                              u32 Sn:6;
                              u32 Pn:6;
                    } __packed;
          };
} __packed;
```

[10] 256 for P4080/P5020/P3041

```
/* This struct represents the 13-bit "CS_THRES" CGR field. In the corresponding
 * management commands, this is padded to a 16-bit structure field, so that's
 * how we represent it here. The congestion state threshold is calculated from
 * these fields as follows;
 *   CS threshold = TA * (2 ^ Tn)
 */
struct qm_cgr_cs_thres {
          u16 __reserved:3;
          u16 TA:8;
          u16 Tn:5;
} __packed;
/* This identical structure of CGR fields is present in the "Init/Modify CGR"
 * commands and the "Query CGR" result. It's suctioned out here into its own
 * struct. */
struct __qm_mc_cgr {
          struct qm_cgr_wr_parm wr_parm_g;
          struct qm_cgr_wr_parm wr_parm_y;
          struct qm_cgr_wr_parm wr_parm_r;
          u8 wr_en_g; /* boolean, use QM_CGR_EN */
          u8 wr_en_y;  /* boolean, use QM_CGR_EN */
          u8 wr_en_r;  /* boolean, use QM_CGR_EN */
          u8 cscn_en;   /* boolean, use QM_CGR_EN */
          union {
                  struct {
                           u16 cscn_targ_upd_ctrl; /* use QM_CSCN_TARG_UDP_ */
                           u16 cscn_targ_dcp_low;  /* CSCN_TARG_DCP low-16bits */
                  };
                  u32 cscn_targ;  /* use QM_CGR_TARG_* */
          };
          u8 cstd_en;   /* boolean, use QM_CGR_EN */
          u8 cs;                  /* boolean, only used in query response */
          struct qm_cgr_cs_thres cs_thres;
          u8 mode;   /* QMAN_CRG_MODE_FRAME not supported in rev1.0 */
} __packed
struct qm_mcc_initcgr {
          u8 __reserved1;
          u16 we_mask; /* Write Enable Mask */
          struct __qm_mc_cgr cgr; /* CGR fields */
          u8 __reserved2[2];
          u8 cgid;
          u8 __reserved4[32];
} __packed;
/**
 * qman_create_cgr - Register a congestion group object
 * @cgr: the 'cgr' object, with fields filled in
 * @flags: QMAN_CGR_FLAG_* values
 * @opts: optional state of CGR settings
 *
 * Registers this object to receiving congestion entry/exit callbacks on the
 * portal affine to the cpu portal on which this API is executed. If opts is
 * NULL then only the callback (cgr->cb) function is registered. If @flags
 * contains QMAN_CGR_FLAG_USE_INIT, then an init hw command (which will reset
 * any unspecified parameters) will be used rather than a modify hw hardware
 * (which only modifies the specified parameters).
 */
int qman_create_cgr(struct qman_cgr *cgr, u32 flags, struct qm_mcc_initcgr *opts);
/**
 * qman_create_cgr_to_dcp - Register a congestion group object to DCP portal
 * @cgr: the 'cgr' object, with fields filled in
 * @flags: QMAN_CGR_FLAG_* values
```

```
 * @dcp_portal: the DCP portal to which the cgr object is registered
 * @opts: optional state of CGR settings
 *
 */
int qman_create_cgr_to_dcp(struct qman_cgr *cgr, u32 flags, u16 dcp_portal,
                           struct qm_mcc_initcgr *opts);
/**
 * qman_delete_cgr - Deregisters a congestion group object
 * @cgr: the 'cgr' object to deregister
 *
 * "Unplugs" this CGR object from the portal affine to the cpu on which this API
 * is executed. This must be excuted on the same affine portal on which it was
 * created.
 */
int qman_delete_cgr(struct qman_cgr *cgr);
/**
 * qman_modify_cgr - Modify CGR fields
 * @cgr: the 'cgr' object to modify
 * @flags: QMAN_CGR_FLAG_* values
 * @opts: the CGR-modification settings
 *
 * The @opts parameter can be NULL. Note that some fields and options within
* @opts may be ignored or overwritten by the driver, in particular the 'cgrid'
* field is ignored (this operation only affects the given CGR object). If
* @flags contains QMAN_CGR_FLAG_USE_INIT, then an init hw command (which will
* reset any unspecified parameters) will be used rather than a modify hw
* hardware (which only modifies the specified parameters).
 */
int qman_modify_cgr(struct qman_cgr *cgr, u32 flags, struct qm_mcc_initcgr *opts);
/**
 * qman_query_cgr - Queries CGR fields
 * @cgr: the 'cgr' object to query
 * @result: storage for the queried congestion group record
 */
int qman_query_cgr(struct qman_cgr *cgr, struct qm_mcr_querycgr *result);
```

8.2.3.2.5.1.9 Zero-Configuration Messaging

As described in Overview (QMan), the demux logic of the QMan portal driver uses the contextB field of FQDs, as published in DQRR and MR entries, to determine the corresponding FQ object, and from there the DQRR or MR callback to invoke. However, "default callbacks" can also be associated with a portal that will be used if a "NULL" FQ is dequeued from, where NULL refers to a FQD whose contextB entry has been initialized to NULL (this occurs when using the QMAN_INITFQ_FLAG_NULL flag to the qman_init_fq() API, described in Initialize a FQ).

The purpose of this mechanism is to allow the user of one portal to enqueue frames on any frame queue that is configured in this way and schedule it to another portal. For virtualization or AMP scenarios, it is a difficult architectural problem to configure all guest operating systems to agree, in advance, on run-time parameters. The use of NULL frame queues allows a control plane guest OS to use any frame queue, configured with a NULL "contextB" field (see the QMAN_INITFQ_FLAG_NULL flag in the "Frame queue management" section below), to send any and all such configuration to another guest by scheduling that NULL frame queue to one of the target guest's portals. The target guest will have the portal's "NULL" callbacks invoked rather than those of any frame queue objects, and as such this provides what could be considered a "zero-configuration" interface - no agreement is required over what frame queue that configuration information will be arriving on, only that the configuration will arrive via the portal as a message on a NULL frame queue.

NOTE

Unless the payload of FDs passed over a zero-config FQ fits entirely within the 32-bit cmd/status field, buffers will presumably be required and the zero-configuration mechanism described here does not address how the sending and receiving ends should agree on what memory resources and management to use for this.

```
/**
 * qman_get_null_cb - get callbacks currently used for "null" frame queues
 *
 * Copies the callbacks used for the affine portal of the current cpu.
 */
void qman_get_null_cb(struct qman_fq_cb *null_cb);
/**
 * qman_set_null_cb - set callbacks to use for "null" frame queues
 *
 * Sets the callbacks to use for the affine portal of the current cpu, whenever
 * a DQRR or MR entry refers to a "null" FQ object. (Eg. zero-conf messaging.)
 */
void qman_set_null_cb(const struct qman_fq_cb *null_cb);
```

8.2.3.2.5.1.10 FQ allocation

8.2.3.2.5.1.10.1 Ad-hoc FQ allocator

As described in Seeding Buffer Pools>, BMan buffer pool ID zero is currently reserved for use as an ad-hoc FQ allocator. As seen in Frame queue management, this feature can be used implicitly when creating a FQ object by passing the QMAN_FQ_FLAG_DYNAMIC_FQID flag to qman_init_fq(). The advantage of this mechanism is that it works across all cpus/portals, independent of any hypervisor or other system partitioning. The disadvantage of this mechanism is that does not permit the atomic nor contiguous allocation of more than one FQ at a time, and in particular most high-performance uses of FMan require contiguous ranges of FQIDs that also meet certain alignment requirements (ie. that the FQID range begins on an aligned FQID value).

8.2.3.2.5.1.10.2 FQ range allocator

The following APIs allow software to allocate and release arbitrary ranges of FQIDs, but it should be noted that the current version of the NXP Datapath software implements this without any hardware interaction. As such, multiple (guest) systems running on the same chip will each have their own allocator and are not aware of each other's (de)allocations. The range allocator's default state is empty, and it can be seeded by calling qman_release_fqid_range() on initialization with an appropriate FQID range to manage. The intention is for the control-plane software to initialize this range and to perform all allocations and deallocations on behalf of any software running on different system instances.

```
/**
 * qman_alloc_fqid_range - Allocate a contiguous range of FQIDs
 * @result: is set by the API to the base FQID of the allocated range
 * @count: the number of FQIDs required
 * @align: required alignment of the allocated range
 * @partial: non-zero if the API can return fewer than @count FQIDs
 * Returns the number of frame queues allocated, or a negative error code. If
 * @partial is non zero, the allocation request may return a smaller range of
 * FQs than requested (though alignment will be as requested). If @partial is
 * zero, the return value will either be 'count' or negative.
 */
int qman_alloc_fqid_range(u32 *result, u32 count, u32 align, int partial);
/**
 * qman_release_fqid_range - Release the specified range of frame queue IDs
 * @fqid: the base FQID of the range to deallocate
 * @count: the number of FQIDs in the range
 *
 * This function can also be used to seed the allocator with ranges of FQIDs
```

```
 * that it can subsequently use. Returns zero for success.
 */
void qman_release_fqid_range(u32 fqid, unsigned int count);
```

8.2.3.2.5.1.10.3 Future FQ allocator changes

Please note that a future version of the NXP Datapath software will automatically seed the range allocator with all FQIDs available to QMan, it will reimplement these APIs over an IPC layer such that all system instances share a common allocator instance, and the BMan-based FQ allocator will be removed and the corresponding APIs being reimplemented to use this range allocator.

8.2.3.2.5.1.11 Helper functions

In cases where software running on different CPUs communicate using QMan frame queues, there can arise an initialization problem related to synchronisation. If one side is termed the producer and the other the consumer, then the question becomes one of when it is safe for the producer to enqueue to that FQ. It is normal for software consumers to take care of initializing and scheduling FQs, because they must provide initialization and scheduling details in order for dequeue-handling to function correctly. But on the producer side, any attempt to enqueue to the FQ prior to the FQ being initialized will be rejected (enqueues are not permitted to OutOfService FQs). The following inline function can be used directly or as an example of how to determine when a FQ has changed state.

NOTE

It is safe for the producer to enqueue once the FQ has been initialized but not yet scheduled by the consumer.

```
/**
 * qman_poll_fq_for_init - Check if an FQ has been initialized from OOS
 * @fqid: the FQID that will be initialized by other s/w
 *
 * In many situations, a FQID is provided for communication between s/w
 * entities, and whilst the consumer is responsible for initialising and
 * scheduling the FQ, the producer(s) generally create a wrapper FQ object using
 * and only call qman_enqueue() (no FQ initialisation, scheduling, etc). Ie;
 *     qman_create_fq(..., QMAN_FQ_FLAG_NO_MODIFY, ...);
 * However, data can not be enqueued to the FQ until it is initialized out of
 * the OOS state - this function polls for that condition. It is particularly
 * useful for users of IPC functions - each endpoint's Rx FQ is the other
 * endpoint's Tx FQ, so each side can initialise and schedule their Rx FQ object
 * and then use this API on the (NO_MODIFY) Tx FQ object in order to
 * synchronise. The function returns zero for success, +1 if the FQ is still in
 * the OOS state, or negative if there was an error.
 */
static inline int qman_poll_fq_for_init(struct qman_fq *fq)
{
        struct qm_mcr_queryfq_np np;
        int err;
        err = qman_query_fq_np(fq, &np);
        if (err)
                return err;
        if ((np.state & QM_MCR_NP_STATE_MASK) == QM_MCR_NP_STATE_OOS)
                return 1;
        return 0;
}
```

8.2.3.2.6 Sysfs and debugfs QMan/BMan interfaces

The following section describes the QMan and BMan interfaces available via sysfs and debugfs.

NOTE

Check the device-tree of each SoC to determine the interfaces available. For more information, see the Reference Manual for the SoC, and/or examine the sysfs filesystem at run-time.

8.2.3.2.6.1 QMan sysfs

8.2.3.2.6.1.1 /sys/devices/platform/soc/1880000.qman/

Description:

This directory contains a snapshot of the internal state of the qman device.

8.2.3.2.6.1.2 /sys/devices/ffe000000.soc/ffe318000.qman/error_capture

Description:

This directory contains a snapshot of error related qman attributes.

8.2.3.2.6.1.3 /sys/devices/ffe000000.soc/ffe318000.qman/error_capture/sbec_<0..6>

Description:

Provides a count of the number of single bit ECC errors that have occurred when reading from one of the QMan internal memories. The range <0..6> represent a QMAN internal memory region defined as follows:

0: FQD cache memory

1: FQD cache tag memory

2: SFDR memory

3: WQ context memory

4: Congestion Group Record memory

5: Internal Order Restoration List memory

6: Software Portal ring memory

This file is read-reset.

8.2.3.2.6.1.4 /sys/devices/ffe000000.soc/ffe318000.qman/sfdr_in_use

Description:

Reports the number of SFDR currently in use. The minimum value is 1.

This file is read-only.

8.2.3.2.6.1.5 /sys/devices/ffe000000.soc/ffe318000.qman/pfdr_fpc

Description:

Total Packed Frame Descriptor Record Free Pool Count in external memory.

This file is read-only

8.2.3.2.6.1.6 /sys/devices/ffe000000.soc/ffe318000.qman/pfdr_cfg

Description:

Used to read the configuration of the dynamic allocation policy for PFDRs. The value is used to account for PFDR that may be required to complete any currently executing operations in the sequencers.

This file is read-only.

8.2.3.2.6.1.7 /sys/devices/ffe000000.soc/ffe318000.qman/idle_stat

Description:

This file can be used to determine when QMan is both idle and empty. The possible values are:

0: All work queues in QMan are NOT empty and QMan is NOT idle.

1: All work queues in QMan are NOT empty and QMan is idle.

2: All work queues in QMan are empty

3: All work queues in QMan are empty and QMan is idle.

This file is read-only.

8.2.3.2.6.1.8 /sys/devices/ffe000000.soc/ffe318000.qman/err_isr

Description:

QMan contains one dedicated interrupt line for signaling error conditions to software. This file identifies the source of the error interrupt within QMan. The value is displayed in hexadecimal format. Refer to the appropriate QorIQ SOC Reference Manual for a description of the QMAN_ERR_ISR register.

This file is read-only.

8.2.3.2.6.1.9 /sys/devices/ffe000000.soc/ffe318000.qman/dcp<0..3>_dlm_avg

Description:

These files contain an EWMA (exponentially weighted moving average) of dequeue latency samples for dequeue commands received on the sub portal. The range <0..3> refers to each of the direct-connect portals. The display format is as follows: <avg_interger>.<avg_fraction>

This file can be seeded with a interger value. The input interger is processed in the following manner: <avg_fraction> = lowest 8 bits / 256 , <avg_interger> = next 12 bits

ex: echo 0x201 > dcp0_dlm_avg

cat dcp0_dlm_avg

0.00390625

This file is read-write

8.2.3.2.6.1.10 /sys/devices/ffe000000.soc/ffe318000.qman/ci_rlm_avg

Description:

This file contains an EWMA (exponentially weighted moving average) of read latency samples for reads on CoreNet initiated by QMan. The display format is as follows: <avg_interger>.<avg_fraction>

This file can be seeded with a interger value. The input interger is processed in the following manner: <avg_fraction> = lowest 8 bits / 256 , <avg_interger> = next 12 bits

ex: echo 0x201 > ci_rlm_avg

cat ci_rlm_avg

0.00390625

This file is read-write

8.2.3.2.6.2 BMan sysfs

8.2.3.2.6.2.1 /sys/devices/ffe000000.soc/ffe31a000.bman

Description:

This directory contains a snapshot of the internal state of the BMan device.

8.2.3.2.6.2.2 /sys/devices/ffe000000.soc/ffe31a000.bman/error_capture

Description:

This directory contains a snapshot of error related BMan attributes.

8.2.3.2.6.2.3 /sys/devices/ffe000000.soc/ffe31a000.bman/error_capture/sbec_<0..1>

Description:

Provides a count of the number of single bit ECC errors that have occurred when reading from one of the BMan internal memories. The range <0..1> represent a BMAN internal memory region defined as follows:

0: Stockpile memory 0

1: Software Portal ring memory

This file is read-reset.

8.2.3.2.6.2.4 /sys/devices/ffe000000.soc/ffe31a000.bman/pool_count

Description:

This directory contains a snapshot of the number of free buffers available in any of the buffer pools.

8.2.3.2.6.2.5 /sys/devices/ffe000000.soc/ffe31a000.bman/fbpr_fpc

Description:

This file returns a snapshot of the Free Buffer Proxy Record free pool size. Total Free Buffer Proxy Record Free Pool Count in external memory.

This file is read-only

8.2.3.2.6.2.6 /sys/devices/ffe000000.soc/ffe31a000.bman/err_isr

Description:

BMan contains one dedicated interrupt line for signaling error conditions to software. This file identifies the source of the error interrupt within BMan. The value is displayed in hexadecimal format. Refer to the appropriate QorIQ SOC Reference Manual for a description of the BMAN_ERR_ISR register.

This file is read-only.

8.2.3.2.6.3 QMan debugfs

8.2.3.2.6.3.1 /sys/kernel/debug/qman

Description:

This directory contains various QMan device debugging attributes.

8.2.3.2.6.3.2 /sys/kernel/debug/qman/query_cgr

Description:

Query the entire contents of a Congestion Group Record. The file takes as input the Congestion Group Record ID. The output of the file returns the various CGR fields.

For example, if we want to query cgr_id 10 we would do the following:

echo 10 > query_cgr

cat query_cgr

Query CGR id 0xa

wr_parm_g MA: 0, Mn: 0, SA: 0, Sn: 0, Pn: 0

wr_parm_y MA: 0, Mn: 0, SA: 0, Sn: 0, Pn: 0

wr_parm_r MA: 0, Mn: 0, SA: 0, Sn: 0, Pn: 0

wr_en_g: 0, wr_en_y: 0, we_en_r: 0

cscn_en: 0

cscn_targ: 0

cstd_en: 0

cs: 0

cs_thresh_TA: 0, cs_thresh_Tn: 0

i_bcnt: 0

a_bcnt: 0

8.2.3.2.6.3.3 /sys/kernel/debug/qman/query_congestion

Description:

Query the state of all 256 Congestion Groups in QMan. This is a read-only file. The output of the file returns the state of all congestion group records. The state of a congestion group is either "in congestion" or "not in congestion". Since CGR are normally not in congestion, only CGR which are in congestion are returned. If no CGR are in congestion, then this is indicated.

For example, if we want to perform a query we would do the following:

cat query_congestion

Query Congestion Result

All congestion groups not congested.

8.2.3.2.6.3.4 /sys/kernel/debug/qman/query_fq_fields

Description:

Query the frame queue programmable fields. This file takes as input the frame queue id to be queried on a subsequent read. The output of this file returns all the frame queue programmable fields. The default frame queue id is 1.

Refer to the appropriate QorIQ SOC Reference Manual for detailed explanation on the return values.

For example, if we determine that our application is using frame queue 482 we could use this file in the following manner:

echo 482 > query_fq_fields

cat query_fq_fields

Query FQ Programmable Fields Result fqid 0x1e2

orprws: 0

oa: 0

olws: 0

cgid: 0

fq_ctrl:

Aggressively cache FQ

Don't block active

Context-A stashing

Tail-Drop Enable

dest_channel: 33

dest_wq: 7

ics_cred: 0

td_mant: 128

td_exp: 7

ctx_b: 0x19e

ctx_a: 0x78b59e18

ctx_a_stash_exclusive:

FQ Ctx Stash

Frame Annotation Stash

ctx_a_stash_annotation_cl: 1

ctx_a_stash_data_cl: 2

ctx_a_stash_context_cl: 2

8.2.3.2.6.3.5 /sys/kernel/debug/qman/query_fq_np_fields

Description:

Query the frame queue non programmable fields. This file takes as input the frame queue id to be queried on a subsequent read. The output of this file returns all the frame queue non programmable fields. The default frame queue id is 1.

Refer to the appropriate QorIQ SOC Reference Manual for detailed explanation on the return values.

For example, if we determine that our application is using frame queue 482 we could use this file in the following manner:

echo 482 > query_fq_np_fields

cat query_fq_np_fields

Query FQ Non Programmable Fields Result fqid 0x1e2

force eligible pending: no

retirement pending: no

state: Out of Service

fq_link: 0x0

orp_nesn: 0

orp_ea_hseq: 0

orp_ea_tseq: 0

orp_ea_hptr: 0x0

orp_ea_tptr: 0x0

pfdr_hptr: 0x0

pfdr_tptr: 0x0

is: ics_surp contains a surplus

ics_surp: 0

byte_cnt: 0

frm_cnt: 0

ra1_sfdr: 0x0

ra2_sfdr: 0x0

od1_sfdr: 0x0

od2_sfdr: 0x0

od3_sfdr: 0x0

8.2.3.2.6.3.6 /sys/kernel/debug/qman/query_cq_fields

Description:

Query all the fileds of in a particular CQD. This file takes input as the DCP id plus the class queue id to be queried on a subsequent read. The output of this file returns all the class queue fields. The default class queue id is 1 of DCP 0

Refer to the appropriate QorIQ SOC Reference Manual for detailed explanation on the return values.

For example, if we determine that our application is using class queue 4 of DCP 1, we could use this file in the following manner:

echo 0x01000004 > query_cq_fields

(The most left 8 bits are used to specify DCP id, and the rest of 24 bits are used to specify the class queue id)

cat query_fq_fields

Query CQ Fields Result cqid 0x4 on DCP 1

ccgid: 4

state: 0

pfdr_hptr: 0

pfdr_tptr: 0

od1_xsfdr: 0

od2_xsfdr: 0

od3_xsfdr: 0

od4_xsfdr: 0

od5_xsfdr: 0

od6_xsfdr: 0

ra1_xsfdr: 0

ra2_xsfdr: 0

frame_count: 0

8.2.3.2.6.3.7 /sys/kernel/debug/qman/query_ceetm_ccgr

Description:

Query the configuration and state fields within a CEETM Congestion Group Record that relate to congestion management(CM). This file takes input as the DCP id(most left 8 bits) and CEETM Congestion Group Record ID(most right 24 bits). The output of the file returns the various CCGR fields.

For example, if we want to query ccgr_id 7 of DCP 0, we would do the following:

echo 0x00000007 > query_ceetm_ccgr

cat query_ceetm_ccgr

Query CCGID 7

Query CCGR id 7 in DCP 0

wr_parm_g MA: 0, Mn: 0, SA: 0, Sn: 0, Pn: 0

wr_parm_y MA: 0, Mn: 0, SA: 0, Sn: 0, Pn: 0

wr_parm_r MA: 0, Mn: 0, SA: 0, Sn: 0, Pn: 0

wr_en_g: 0,

wr_en_y: 0,

we_en_r: 0

cscn_en: 0

cscn_targ_dcp:

cscn_targ_swp:

td_en: 0

cs_thresh_in_TA: 0,

cs_thresh_in_Tn: 0

cs_thresh_out_TA: 0,

cs_thresh_out_Tn: 0

td_thresh_TA: 0,

td_thresh_Tn: 0

mode: byte count

i_cnt: 0

a_cnt: 0

8.2.3.2.6.3.8 /sys/kernel/debug/qman/query_wq_lengths

Description:

Query the length of the Work Queues in a particular channel. This file takes as input a specified channel id. The output of this file returns the lengths of the work queues on the specified channel.

For example, if we want to query channel 1 we would do the following:

echo 1 > query_wq_lengths

cat query_wq_lengths

Query Result For Channel: 0x1

wq0_len : 0

wq1_len : 0

wq2_len : 0

wq3_len : 0

wq4_len : 0

wq5_len : 0

wq6_len : 0

wq7_len : 0

8.2.3.2.6.3.9 /sys/kernel/debug/qman/fqd/avoid_blocking_[enable | disable]

Description:

Query Avoid_Blocking bit in all frame queue descriptors. This is a read only file. The output of this file returns all the frame queue ids, in a comma seperated list, which have their Avoid_Blocking bit mask enabled or disabled.

For example, if we want to find all frame queues with Avoid_Blocking enabled, we would do the following:

```
# cat avoid_blocking_enable
List of fq ids with: Avoid Blocking :enabled
0x0001d2,0x0001d3,0x0001d4,0x0001d5,0x0001de,0x0001df,0x0001e0,0x0001e1,
0x0001ea,0x0001eb,0x0001ec,0x0001ed,0x0001f6,0x0001f7,0x0001f8,0x0001f9,
...
Total FQD with: Avoid Blocking : enabled = 528
Total FQD with: Avoid Blocking : disabled = 32239
```

8.2.3.2.6.3.10 /sys/kernel/debug/qman/fqd/prefer_in_cache_[enable | disable]

Description:

Query Prefer_in_Cache bit in all frame queue descriptors. This is a read only file. The output of this file returns all the frame queue ids, in a comma seperated list, which have their Prefer_in_Cache bit mask enabled or disabled.

For example, if we want to find all frame queues with Prefer_in_Cache enabled, we would do the following:

```
# cat prefer_in_cache_enable
List of fq ids with: Prefer in cache :enabled
0x0001ca,0x0001cb,0x0001cc,0x0001cd,0x0001ce,0x0001cf,0x0001d0,0x0001d1,
0x0001d2,0x0001d3,0x0001d4,0x0001d5,0x0001d6,0x0001d7,0x0001d8,0x0001d9,
...
Total FQD with: Prefer in cache : enabled = 560
Total FQD with: Prefer in cache : disabled = 32207
```

8.2.3.2.6.3.11 /sys/kernel/debug/qman/fqd/cge_[enable | disable]

Description:

Query Congestion_Group_Enable bit in all frame queue descriptors. This is a read only file. The output of this file returns all the frame queue ids, in a comma seperated list, which have their Congestion_Group_Enable bit mask enabled or disabled.

For example, if we want to find all frame queues with Congestion_Group_Enable disabled, we would do the following:

```
# cat cge_disable
List of fq ids with: Congestion Group Enable :disabled
0x000001,0x000002,0x000003,0x000004,0x000005,0x000006,0x000007,0x000008,
0x000009,0x00000a,0x00000b,0x00000c,0x00000d,0x00000e,0x00000f,0x000010,
...
Total FQD with: Congestion Group Enable : enabled = 0
Total FQD with: Congestion Group Enable : disabled = 32767
```

8.2.3.2.6.3.12 /sys/kernel/debug/qman/fqd/cpc_[enable | disable]

Description:

Query CPC_Stash_Enable bit in all frame queue descriptors. This is a read only file. The output of this file returns all the frame queue ids, in a comma seperated list, which have their CPC_Stash_Enable bit mask enabled or disabled.

For example, if we want to find all frame queues with CPC Stash disabled, we would do the following:

```
# cat cpc_disable
List of fq ids with: CPC Stash Enable :disabled
0x000001,0x000002,0x000003,0x000004,0x000005,0x000006,0x000007,0x000008,
0x000009,0x00000a,0x00000b,0x00000c,0x00000d,0x00000e,0x00000f,0x000010,
...
Total FQD with: CPC Stash Enable : enabled = 0
Total FQD with: CPC Stash Enable : disabled = 32767
```

8.2.3.2.6.3.13 /sys/kernel/debug/qman/fqd/cred

Description:

Query Intra-Class Scheduling bit in all frame queue descriptors. This is a read only file. The output of this file returns all the frame queue ids, in a comma seperated list, which have their Intra-Class Scheduling Credit value greater than 0.

```
# cat cred
List of fq ids with Intra-Class Scheduling Credit > 0
Total FQD with ics_cred > 0 = 0
```

8.2.3.2.6.3.14 /sys/kernel/debug/qman/fqd/ctx_a_stashing_[enable | disable]

Description:

Query Context_A bit in all frame queue descriptors. This is a read only file. The output of this file returns all the frame queue ids, in a comma seperated list, which have their Context_A bit mask enabled or disabled.

For example, if we want to find all frame queues with Context_A enabled, we would do the following:

```
# cat ctx_a_stashing_enable
List of fq ids with: Context-A stashing :enabled
0x0001d2,0x0001d3,0x0001d4,0x0001d5,0x0001de,0x0001df,0x0001e0,0x0001e1,
0x0001ea,0x0001eb,0x0001ec,0x0001ed,0x0001f6,0x0001f7,0x0001f8,0x0001f9,
...
Total FQD with: Context-A stashing : enabled = 528
Total FQD with: Context-A stashing : disabled = 32239
```

8.2.3.2.6.3.15 /sys/kernel/debug/qman/fqd/hold_active_[enable | disable]

Description:

Query Hold_Active bit in all frame queue descriptors. This is a read only file. The output of this file returns all the frame queue ids, in a comma seperated list, which have their Hold_Active bit mask enabled or disabled.

For example, if we want find all frame queues with Hold_Active enabled, we would do the following:

```
# cat hold_active_enable
List of fq ids with: Hold active in portal :enabled
Total FQD with: Hold active in portal : enabled = 0
Total FQD with: Hold active in portal : disabled = 32767
```

8.2.3.2.6.3.16 /sys/kernel/debug/qman/fqd/orp_[enable | disable]

Description:

Query ORP bit in all frame queue descriptors. This is a read only file. The output of this file returns all the frame queue ids, in a comma seperated list, which have their ORP bit mask enabled or disabled.

For example, if we want find all frame queues with ORP enabled, we would do the following:

```
# cat orp_enable
List of fq ids with: ORP Enable :enabled
Total FQD with: ORP Enable : enabled = 0
Total FQD with: ORP Enable : disabled = 32767
```

8.2.3.2.6.3.17 /sys/kernel/debug/qman/fqd/sfdr_[enable | disable]

Description:

Query Force_SFDR_Allocate bit in all frame queue descriptors. This is a read only file. The output of this file returns all the frame queue ids, in a comma seperated list, which have their Force_SFDR_Allocate bit mask enabled or disabled.

For example, if we want to find all frame queues with Force_SFDR_Allocate enabled, we would do the following:

```
# cat sfdr_enable
List of fq ids with: High-priority SFDRs :enabled(1)
Total FQD with: High-priority SFDRs : enabled = 0
Total FQD with: High-priority SFDRs : disabled = 32767
```

8.2.3.2.6.3.18 sys/kernel/debug/qman/fqd/state_[active | oos | parked | retired | tentatively_sched | truly_sched]

Description:

Query Frame Queue State in all frame queue descriptors. This is a read only file. The output of this file returns all the frame queue ids, in a comma seperated list, which are in the specified state: active, oos, parked, retired, tentatively scheduled or truly scheduled.

For example, the following returns all the frame queues in the Tentatively Scheduled state:

```
# cat state_tentatively_sched
List of fq ids in state: Tentatively Scheduled
0x0001ca,0x0001cb,0x0001cc,0x0001cd,0x0001ce,0x0001cf,0x0001d0,0x0001d1,
0x0001d2,0x0001d3,0x0001d4,0x0001d5,0x0001d6,0x0001d7,0x0001d8,0x0001d9,
...
Out of Service count = 32201
Retired count = 0
Tentatively Scheduled count = 566
Truly Scheduled count = 0
Parked count = 0
Active, Active Held or Held Suspended count = 0
```

8.2.3.2.6.3.19 /sys/kernel/debug/qman/fqd/tde_[enable | disable]

Description:

Query Tail_Drop_Enable bit in all frame queue descriptors. This is a read only file. The output of this file returns all the frame queue ids, in a comma seperated list, which have their Tail_Drop_Enable bit mask enabled or disabled.

For example, the following returns all the frame queues with Tail_Drop_Enable bit enabled:

```
# cat tde_enable
List of fq ids with: Tail-Drop Enable :enabled(1)
0x0001ca,0x0001cb,0x0001cc,0x0001cd,0x0001ce,0x0001cf,0x0001d0,0x0001d1,
0x0001d2,0x0001d3,0x0001d4,0x0001d5,0x0001d6,0x0001d7,0x0001d8,0x0001d9,
...
Total FQD with: Tail-Drop Enable : enabled = 560
Total FQD with: Tail-Drop Enable : disabled = 32207
```

8.2.3.2.6.3.20 /sys/kernel/debug/qman/fqd/wq

Description:

Query Destination Work Queue in all frame queue descriptors. This file takes as input work queue id combined with channel id (destination work queue). The output of this file returns all the frame queues with destination work queue number as specified in the input.

For example, the following returns all the frame queues with their destination work queue number equal to 0x10f:

```
# echo 0x10f > wq
# cat wq
List of fq ids with destination work queue id = 0x10f
0x0001d2,0x0001d3,0x0001d4,0x0001d5,0x0001de,0x0001df,0x0001e0,0x0001e1,
0x0001ea,0x0001eb,0x0001ec,0x0001ed,0x0001f6,0x0001f7,0x0001f8,0x0001f9,
0x0001fa,0x0001fb,0x0001fd,0x0001fe
Summary of all FQD destination work queue values
Channel: 0x0 WQ: 0x0 WQ_ID: 0x0, count = 32199
Channel: 0x0 WQ: 0x0 WQ_ID: 0x4, count = 1
Channel: 0x0 WQ: 0x3 WQ_ID: 0x7, count = 64
Channel: 0x1 WQ: 0x3 WQ_ID: 0xf, count = 64
Channel: 0x2 WQ: 0x3 WQ_ID: 0x17, count = 64
Channel: 0x3 WQ: 0x3 WQ_ID: 0x1f, count = 64
Channel: 0x4 WQ: 0x3 WQ_ID: 0x27, count = 64
Channel: 0x5 WQ: 0x3 WQ_ID: 0x2f, count = 64
Channel: 0x6 WQ: 0x3 WQ_ID: 0x37, count = 64
Channel: 0x7 WQ: 0x3 WQ_ID: 0x3f, count = 64
Channel: 0x21 WQ: 0x3 WQ_ID: 0x10f, count = 20
Channel: 0x42 WQ: 0x3 WQ_ID: 0x217, count = 8
Channel: 0x45 WQ: 0x0 WQ_ID: 0x228, count = 1
Channel: 0x60 WQ: 0x3 WQ_ID: 0x307, count = 8
Channel: 0x61 WQ: 0x3 WQ_ID: 0x30f, count = 8
Sysfs and Debugfs QMan/BMan interfaces
QMan, BMan API RM, Rev. 0.13
NXP Semiconductors NXP Confidential Proprietary 8-67
Preliminary—Subject to Change Without Notice
Channel: 0x62 WQ: 0x3 WQ_ID: 0x317, count = 8
Channel: 0x65 WQ: 0x0 WQ_ID: 0x328, count = 1
Channel: 0xa0 WQ: 0x0 WQ_ID: 0x504, count = 1
```

8.2.3.2.6.3.21 /sys/kernel/debug/qman/fqd/summary

Description:

Provides a summary of all the fields in all frame queue descriptors. This is a read only file.

```
# cat summary
Out of Service count = 32201
Retired count = 0
Tentatively Scheduled count = 566
Truly Scheduled count = 0
Parked count = 0
Active, Active Held or Held Suspended count = 0
----------------------------------------
Prefer in cache count = 560
Hold active in portal count = 0
Avoid Blocking count = 528
High-priority SFDRs count = 0
CPC Stash Enable count = 0
Context-A stashing count = 528
ORP Enable count = 0
Tail-Drop Enable count = 560
```

8.2.3.2.6.3.22 /sys/kernel/debug/qman/ccsrmempeek

Description:

Provides access to Queue Manager ccsr memory map. This file takes as input an offset from the QMan CCSR base address. The output of this file returns the 32-bit value of the memory address as specified in the input.

For example, to query the QM IP Block Revision 1 register (which is at offset 0xbf8 from the QMan CCSR base address), we would do the following:

```
# echo 0xbf8 > ccsrmempeek
# cat cccsrmempeek
QMan register offset = 0xbf8
value = 0x0a010101
```

8.2.3.2.6.3.23 /sys/kernel/debug/qman/query_ceetm_xsfdr_in_use

Description:

Query the number of XSFDRs currently in use by the CEETM logic of the DCP portal. This file takes input as the DCP id. The output of the file returns the number of XSFDR in use. Please note this feature is only available in T4/B4 rev2 silicon.

For example, if we want to query XSFDR in use number of DCP 0, we would do the following:

echo 0 > query_ceetm_xsfdr_in_use

cat query_ceetm_xsfdr_in_use

DCP0: CEETM_XSFDR_IN_USE number is 0

8.2.3.2.6.4 BMan debugfs

8.2.3.2.6.4.1 /sys/kernel/debug/bman

Description:

This directory contains various BMan device debugging attributes.

8.2.3.2.6.4.2 /sys/kernel/debug/bman/query_bp_state

Description:

This file requests a snapshot of the availability and depletion state of each of BMan's buffer pools. This is a read only file.

For example, if we want to perform a query we could use this file in the following manner:

```
# cat query_bp_state
```

bp_id free_buffers_avail bp_depleted

0 yes no

1 no no

2 no no

3 no no

4 no no

5 no no

6 no no

7 no no

8 no no

9 no no

10 no no

11 no no

12 no no

13 no no

14 no no

15 no no

16 no no

17 no no

18 no no

19 no no

20 no no

21 no no

22 no no

23 no no

24 no no

25 no no

26 no no

27 no no

28 no no

29 no no

30 no no

31 no no

32 no no

33 no no

34 no no

35 no no

36 no no

37 no no

38 no no

39 no no

40 no no

41 no no

42 no no

43 no no

44 no no

45 no no

46 no no

47 no no

48 no no

49 no no

50 no no

51 no no

52 no no

53 no no

54 no no

55 no no

56 no no

57 no no

58 no no

59 no no

60 no no

61 no no

62 no no

63 yes no

8.2.3.2.7 Error handling and reporting

This chapter describes the QMan and BMan error handling and reporting.

8.2.3.2.7.1 Handling and Reporting

The QMan and BMan error interrupt sevices routines log the occurrence of every error interrupt. Some error interrupts can be triggered multiple times. To prevent a flood of error logging when this interrupts are raised, they are only logged on their first occurance at which time they are disabled. The logs are generated via the pr_warning() kernel api. At the end of the interrupt service routine the ISR register is cleared. These logs are available on the console, dmesg and related log file.

The following QMan error conditions are logged a single time:

QM_EIRQ_PLWI and QM_EIRQ_PEBI.

The following BMan error conditions are logged a single time:

BM_EIRQ_FLWI (low water mark).

8.2.3.2.8 Operating system specifics

This chapter captures O/S-specific issues and distinctions, as the rest of the document essentially describes the interfaces in a generalized manner.

8.2.3.2.8.1 Portal maintenance

By default, the Linux kernel initializes QMan and BMan portals to perform all processing via interrupt-handling. As such there are no persistent threads or polling requirements in order to use portals in the Linux kernel.

Whereas for USDPAA (linux user space), the default is for all processing to be driven by polling, and support for the use of interrupts is disabled. The applications are required to call qman_poll() and bman_poll() within their run-to-completion loops to ensure that portal processing occurs regularly.

As described in Processing non-interrupt-driven portal duties (BMan) (for BMan) and Processing non-interrupt-driven portal duties (QMan) (for QMan), it is also possible to dynamically control at run-time which portal duties are interrupt-driven versus poll-driven, so the aforementioned defaults for Linux are start-up defaults. However, USDPAA needs to be built with "CONFIG_FSL_DPA_IRQ_SAFETY" defined in order to allow any duties to be interrupt-driven, whereas it is disabled by default (in inc/public/conf.h) due to a very slight performance improvement that it yields.

8.2.3.2.8.2 Callback context

In the Linux kernel, all interrupt-driven portal duties are handled in interrupt context, whereas all other portal duties are invoked from within the qman_poll() and bman_poll() functions, which are invoked by the application.

In USDPAA, even interrupt-driven portal duties are handled in an application context. Interrupts are handled within the kernel and locally disabled, and the presence of such interrupt events is available to the application via the USDPAA file-descriptor representing the portal devices. Interrupt-driven portal duties are thus processed when the application calls the qman_thread_irq() and bman_thread_irq() functions, and other portal duties are processed when the application calls qman_poll() and bman_poll().

8.2.3.2.8.3 Blocking semantics

Many high-level QMan and BMan API functions provide "WAIT" flags, to allow the API to block as part of its operation.

In the Linux kernel, "WAIT" behavior is implemented by allowing the calling thread to sleep until a given condition is satisfied. The limitation then to using "WAIT" flags is that the caller can not be in atomic context - i. e. not executing within an interrupt handler, tasklet, bottom-half, etc, nor with any spinlocks held. One consequence is that "WAIT" flags can not be used within a callback.

On run-to-completion systems such as USDPAA, "WAIT" behavior is unsupported and unavailable.

8.2.4 Configuring DPAA1 Frame Queues

8.2.4.1 Introduction

Describes configurations of Queue Manager (QMan) Frame Queues (FQs) associated with Frame Manager (FMan) network interfaces for the QorIQ Data Path Acceleration Architecture (DPAA1). The relationship of the FMan and the QMan channels and work queues are illustrated by examples.

The basic configuration examples for QMan FQs provided yield straightforward and reliable DPAA1 performance. These simple examples may then be fine tuned for special use cases. For additional information and understanding of advanced system level features please refer to the DPAA Reference Manual.

DPAA1 provides the networking specific I/Os, accelerator/offload functions, and basic infrastructure to enable efficient data passing, without locks or semaphores, within the multi-core QorIQ SoC between:

1. The network and I/O interfaces through which that data arrives and leaves
2. The accelerator blocks used by the software to assist in processing that data.

Hardware-managed queues which reside in and are managed by the QMan provide the basic infrastructure elements to enable efficient data path communication. The data resides in delimited work units of frames/packets between cores, hardware accelerators and network interfaces. These hardware-managed queues, known as Frame Queues (FQs), are FIFOs of related frames. These frames comprise buffers that hold a data element, generally a packet. Frames can be single buffers or multiple buffers (using scatter/gather lists).

FQ assignment to consumers i.e., cores, hardware accelerators, network interfaces, are programmable (not hard coded). Specifically, FQs are assigned to work queues which in turn are grouped into channels. Channels which represent a grouping of FQs from which a consumer can dequeue from, are of two types:

- Pool channel: a channel that can be shared between consumers which facilitates load balancing/spreading. (Applicable to cores only. Does not apply to hardware accelerators or netwok interfaces)
- Dedicated channel: a channel that is dedicated to a single consumer.

Each pool or dedicated channel has eight (8) work queues. There are two high priority work queues that have absolute, strict priority over the other six (6) work queues which are grouped into medium and low priority tiers. Each tier contains three work queues which are serviced using a weighted round robin based algorithm. More than one FQ can be assigned to the same work queue as channels implementing a 2-level hierarchical queuing structure. That is, FQs are enqueued/dequeued onto/from work queues. Within a work queue a modified deficit round algorithm is used to determine the number of bytes of data that can be consumed from a FQ at the head of a work queue. The FQ, if not empty, is enqueued back onto the tail of the same work queue once its consumption allowance has been met.

NOTE

- The configuration information provided in this document applies to the QorIQ family of SoCs built on DPAA1 technology
- The configuration information provided in this document assumes a top bin platform frequency.

8.2.4.2 FMan Network interface Frame Queue Configuration

Configuring the QMan Frame Queues (FQs) associated with the FMan network interfaces for QorIQ DPAA1.

Each network interface has an ingress and an egress direction. The ingress direction is defined as the direction from the network interface to the cores. The egress direction is defined as the direction from the cores to the network interfaces.

FQs associated with FMan network interfaces can be either ingress or egress FQs. Ingress FQs are referred to FQs used in the ingress direction to store packets received from network interfaces to be processed by the cores. Egress FQs are referred to FQs used in the egress direction to store packets to be transmitted by FMan out of its network interfaces.

8.2.4.3 FMan network interface ingress FQs configuration

Dependencies for configuration of the ingress Frame Queues (FQs) is dependent on the QMan mechanism used to load balance/spread received packets across the multiple cores in QorIQ DPAA1.

Two mechanisms are offered:

1. Dynamic load balancing
   - Load spread the packets (from ingress FQs) to the cores based on actual core availability/readiness.
   - Achieved through the use of QMan pool channel (i.e. a channel which can be shared by multiple cores).
   - Maintaining packet ordering (e.g. when packets are being forwarded) is achieved through the following two mechanisms:
     a. Order preservation; ensures that related packets (e.g. a sequence of packets moving between two end points) are processed in order (and typically one at a time).
     b. Order restoration; allows packets to be processed out of order and then restores their order later on before they are transmitted out to the network interfaces.
   - Improves core work load balancing over a static distribution based approach scheme but will not maintain core affinity because a FQ may get processed by multiple cores.
2. Static distribution
   - Static association between FQs and cores; FQs are always processed by the same core.
   - Achieved through the use of QMan dedicated channel (i.e. a channel which supplies FQs to a specific core).
   - Static not dynamic, doesn't react to core load, assigns work to the cores in a static or fixed manner.
   - Does not not require any special order preservation/restoration mechanism as packet ordering is implicitly preserved.

For all of these mechanisms, QMan requires that related packets, which must be processed and/or transmitted in order, be placed on the same FQ. This does not mean that only related packets are placed on a given FQ; many sets of related packets (“flows”) can be placed on a single FQ. FMan is responsible for achieving this placement/FQ selection function through its distribution capabilities. For instance, FMan can be configured to apply a hash function to a set of packet header fields and use the hash value to select the FQ. This set of packet header fields can be for example, a 5-tuple consisting of:

- source IP address
- destination IP address
- protocol
- source port
- destination port

Note that the FMan processing may be out of order, but it has internal mechanism to ensure that packets are enqueued in order of reception.

These mechanisms can be configured and used simultaneously on an SoC device.

8.2.4.4 Ingress FQs common configuration guidelines

Guidelines and examples for configuring ingress Frame Queues (FQs) in the QorIQ DPAA1 are shown.

Following guidelines apply regardless of the load balancing mechanism(s) configured:

- Maximum number of ingress FQs for all ingress interfaces on the device (including any of the separate FQs that are used to serve as an order restoration point (ORP)): 1024
- Maximum number of ingress FQs per work queue (FIFO of FQs):
  - 64 if the aggregate bandwidth of the configured network interface(s) on the device is higher than 10 Gbit/s.
  - 128 if the aggregate bandwidth of the configured network interface(s) on the device is 10 Gbit/s or lower.
- The aggregate bandwidth of the configured network interface(s) on the device receiving packets into FQs associated to the same work queue should not exceed 10 Gbit/s. In other words, the recommended maximum incoming rate into a single work queue is 10 Gbit/s. If the configured network interface(s) on the device is higher than 10 Gbit/s, then multiple work queues should be used.

- Since the Single Frame Descriptor Record (SFDRs) reservation scheme is recommended for the egress FQs (FMan network interface egress FQs configuration) and any other FQs assigned to high priority work queues will also use these reserved SFDRs, careful consideration should be given to the required number of ingress FQs assigned to the high priority work queues as SFDRs are a scarce QMan resource (there is a total of 2K SFDRs). One needs to leave sufficient SFDRs for FQs not using the reserved SFDRs (e.g. ingress FQs assigned to medium or low priority work queues).

As an example, if one allocates 1024 ingress FQs and the aggregate bandwidth of the configured network interface(s) on the device is higher than 10 Gbit/s, then a minimum of 16 work queues would be required based on the above guidelines. Assuming that all 1024 FQs are to be scheduled at the same priority using a dynamic load balancing scheme, a minimum of 6 pool channels would need to be used (based on the fact that up to 3 work queues can be used within a medium or low priority tier).

The guideline “maximum of 1024 ingress FQs for all ingress interfaces” results from the size of the internal memory in QMan that is used to cache Frame Queue Descriptors (FQDs). This internal memory is sized to 2K entries. To achieve high, deterministic and reliable performance under worst-case packet workload (back-to-back 64-byte packets enqueued to FQs on a rotating basis), all ingress FQDs must remain in the QMan internal cache. FQD cache misses increase the time required to enqueue packets as the FQD may need to be read from external memory. This in return could result in received packets being discarded by the MAC due MAC FIFO overflow condition as a result of the back-pressure applied by the FMan to the MAC as there is little buffering between the MAC and the point at which incoming packets are enqueued onto the ingress FQs.

Although a device configured with a number of ingress FQs higher than the size of the QMan FQD internal cache would operate at high performance with no packet discards if the incoming traffic exhibited some level of temporal locality, it is generally recommended that the device be engineered such that ingress path operates at line rate under worst case packet workload to avoid unnecessary packets losses and to make effective use of QMan to prioritize and apply appropriate QoS if there is congestion in a downstream element (e.g. cores). Since all FQs defined on the device shared the QMan 2K internal FQD cache, the recommended maximum number of ingress and egress FQs is even more constrained so that there is adequate space left for caching FQDs assigned to accelerators.

With regards to congestion management, the default mechanism for managing ingress FQ lengths is through buffer management. Input to FQs is limited to the availability of buffers in the buffer pool used to supply buffers to the FQs. Although very efficient and simple, when a buffer pool is shared by multiple FQs, there is no protection between the FQs sharing the buffer pool and as a result a FQ could potentially occupy all the buffers.

Queue management mechanisms can be configured (e.g. tail drop/WRED) to improve congestion control however appropriate software must be in place to handle enqueue rejections as a result of queue congestion.

8.2.4.5 Dynamic load balancing with order preservation - ingress FQs configuration guidelines

Dynamic load balancing with order preservation provides a very effective workload distribution technique to achieve optimal utilization of all cores as it distributes packets to the cores based on actual core availability/readiness.

Order preservation allows FQs to be dynamically reassigned from one core to another while preserving per-FQ packet ordering. It never allows packets from the same FQ to be processed at multiple cores at the same time; a specific FQ is only processed by one core at any given time. Once the FQ is released by the core, it can be processed by any of the cores. To keep multiple cores active there must be multiple FQs distributing packets to the cores, each with a set of (potentially) related packets.

In packet-forwarding scenarios, Discrete Consumption Acknowledgement (DCA) embedded in the enqueue commands should be used to forward packets as this ensures that QMan will release the ingress FQ on software’s behalf once it has finished processing the enqueue command. This provides order preservation semantic from end-to-end (from dequeue to enqueue). To support the above, software portals that will be issuing DCA notifications to QMan must be configured with DCA mode enabled.

Following are specific configuration guidelines for ingress FQs used for dynamic load balancing with order preservation:.

- FQ must be associated to a pool channel (i.e. a channel which can be shared by multiple cores).
- Within a pool channel, minimum number of FQs per active portal (core): 4.
- Frame Queue Descriptor (FQD) attributes settings:
  - Prefer in cache.
  - Hold active set.
  - Don’t set avoid blocking.

- Intra-class scheduling (ICS) credit set to 0 unless a more advanced scheduling scheme is required.
- Don’t set force SFDR allocate unless FQ needs performance optimization.
- FQD CPC stashing enabled.
- Dequeued Frame Data, Annotation, and FQ Context stashing: application dependent.
- Order Restoration Point (ORP) disabled.

8.2.4.6 Dynamic load balancing with order restoration - ingress FQs configuration guidelines

Dynamic load balancing with order restoration dispatches packets from the same Frame Queue (FQ) to different processor cores without attempting to maintain order. QMan provides order restoration with specific configurations shown.

The packet order in the original FQ (e.g. ingress FQ) is restored once the cores complete its processing and return the packets to QMan for sending to the next destination (e.g. egress FQ for transmission).

Dynamic load balancing with order restoration has the advantage that parallel processing of related traffic is possible; allows to process without packet drops a flow that exceed the processing rate of a core. However order restoration does make use of more resources than the other distribution schemes. Its usage must also be balanced with applications need to atomically access shared data.

Order restoration is achieved through the following two QMan components:

- Order Definition Points (ODPs)
  - A point through which packets pass, where their order or sequence relative to each other is defined.
  - For convenience each FQ has an ODP for packets dequeued from that FQ.
- Order Restoration Points (ORPs)
  - A point through which packets pass, where their order or sequence is restored to that defined at the related ODP.
  - If a packet is out of sequence it is held until it is in sequence.
  - ORP data structure is maintained in a FQ; it is recommended that a dedicated/separate FQ be allocated solely for this purpose.

Following are specific configuration guidelines for ingress FQs used for dynamic load balancing with order restoration:

- FQ must be associated to a pool channel (i.e. a channel which can be shared by multiple cores).
- For each ingress FQ supporting order restoration, a separate FQ should be allocated to serve as the ORP.
- Ingress FQ descriptor attributes settings.
  - Prefer in cache
  - Don’t set hold active.
  - Set avoid blocking.
  - Intra-class scheduling (ICS) credit set to 0 unless a more advanced scheduling scheme is required.
  - Don’t set force SFDR allocate unless FQ needs performance optimization.
  - FQD CPC stashing enabled.
  - Dequeued Frame Data, Annotation, and FQ Context stashing: application dependent.
  - ORP disabled.

Following are specific configuration guidelines for ORP FQs:

- FQs used for ORP don’t need to be associated with a pool or dedicated channel.
- ORP FQ descriptor attributes settings:
  - Prefer in cache .

- Don’t set hold active.
- Don’t set avoid blocking.
- Intra-class scheduling credit set to 0.
- Don’t set force SFDR allocate .
- FQD CPC stashing enabled.
- ORP enabled.
- Recommended ORP restoration window size: 128.

8.2.4.7 Static distribution - Ingress FQs Configuration Guidelines

With a static distribution approach, a single FQ is always processed by the same processor core. Specific guidelines for processor core affinity are presented.

Although not as effective as a dynamic based approach from a resource utilization aspect, static distribution maintains core affinity meaning that the mapping from the flow to the core is preserved.

Distribution of packets (selection of FQ) can based on hash keys, ensuring that packets from the same traffic flow will always go to the same cores. The FQ selection function is achieved by FMan.

Following are specific configuration guidelines for ingress FQs used for static distribution:

- FQ must be associated to a dedicated channel (i.e. a channel which supplies FQs to a specific core); multiple FQs can be associated to a single dedicated channel.
- Within a dedicated channel, minimum number of FQs: 1.
- FQ descriptor attributes settings:
  - Prefer in cache .
  - Don’t set hold active
  - Don’t set avoid blocking.
  - Intra-class scheduling (ICS) credit set to 0 unless a more advanced scheduling scheme is required.
  - Don’t set force SFDR allocate unless FQ needs performance optimization.
  - FQD CPC stashing enabled.
  - Dequeued Frame Data, Annotation, and FQ Context stashing: application dependent.
  - ORP disabled.

8.2.4.8 FMan network interface egress FQs configuration

Configuration guidelines for egress Frame Queues (FQs) for QorIQ DPAA1

FQ Configurations:

- Maximum number of egress FQs for all network interfaces: 128.
- Minimum number of egress FQs per network interface: 1.
- Maximum number of egress FQs per work queue: 8.
- Egress FQ descriptor attributes settings:
  - Prefer in cache.
  - Don’t set hold active .
  - Don’t set avoid blocking.

- Set force SFDR allocate to ensure that egress queues make use of the reserved SFDRs; the SFDR reservation threshold field of the QMan SFDR configuration register must also be set accordingly (5 SFDRs per egress FQ + 3 extra SFDRs as required by QMan).
- Intra-class scheduling set to zero (0) unless a more advanced scheduling scheme is required.
- FQD CPC stashing enabled.
- ORP disabled.

.

8.2.4.9 Accelerator Frame Queue Configuration

Configurations for Frame Queues (FQs) used to communicate with accelerators for QorIQ DPAA1 are shown.

FQ accelerator Guidelines:

- Since the Single Frame Descriptor Record (SFDRs) reservation scheme is recommended for the egress FQs (FMan network interface egress FQs configuration) and any other FQs assigned to high priority work queues will also use these reserved SFDRs, careful consideration should be given to the required number of accelerator FQs assigned to the high priority work queues as SFDRs are a scarce QMan resource (there is a total of 2K SFDRs). One needs to leave sufficient SFDRs for FQs not using the reserved SFDRs (e.g. accelerator FQs assigned to medium or low priority work queues).
- Accelerator FQ descriptor attributes settings:
  - Don’t set prefer in cache.
  - Don’t set hold active .
  - Don’t set avoid blocking.
  - FQD CPC stashing enabled.
  - Intra-class scheduling (ICS) credit set to 0 unless a more advanced scheduling scheme is required.
  - Don’t set force SFDR allocate unless FQ needs performance optimization.
  - Dequeued Frame Data, Annotation, and FQ Context stashing: application dependent.
  - ORP disabled.

Generally accelerators are used in a request/response manner and in cases where a pair of FQs is needed per session/flow to communicate with accelerators, one may need to allocate a very large number of FQs (in the order of thousands). At times when many FQs allocated to an accelerator are active, this situation can result in having significant amount of cache consumed for storing the corresponding FQ descriptors. This in turn may negatively impact overall system performance.

To ensure optimal resource utilization (e.g. QorIQ caches), maximize throughput and avoid overload, it is recommended that the number of outstanding requests/responses to an accelerator be regulated. Typically, for a given accelerator, regulating the number of outstanding requests/responses across all its FQs to a few hundredths should be sufficient to maintain high throughput without overloading the system. Regulating the number of outstanding requests/responses to an accelerator can be achieved through various methods.

One method is to keep track in software of the total number of outstanding requests/responses to an accelerator and once this number exceeds a threshold, software would stop sending requests to that accelerator.

Another method is to make use of the congestion management capabilities of QMan. Specifically, all FQs allocated to an accelerator can be aggregated into a congestion group. Each congestion group can be configured to track the number of Frames in all FQs in the congestion group. Once this number exceeds a configured threshold, the congestion group enters congestion. When a congestion group enters congestion, QMan can be configured to rejects enqueues to any FQs in the congestion group and/or sent notification indicating that the congestion group has entered congestion. If a Frame (or request) is not going to be enqueued, it will be returned to the configured destination via an enqueue rejection notification. Congestion state change notifications are generated when the congestion group either enters congestion or exits congestion. On software portals, the congestion state change notification is sent via an interrupt.

8.2.4.10 DPAA1 Frame Queue Configuration Guideline Summary

Summary of Configurations for Frame Queue (FQ) communication with accelerators for QorIQ DPAA1

Four tables comprise this summary:

- Global Configuration settings
- Network interface ingress FQ guidelines
- Network interface egress FQ guidelines
- Accelerator FQ guidelines

Table 66. Global Configuration Settings Summary

Parameter or subject	Guideline
FQD stashing	Recommend QMan explicitly stash FQDs: • QMan; both the global CPC stash enable bit in the QMan FQD_AR register and the CPC stash enable bit in the FQD must be set. • PAMU; PAACT tables used by PAMU also configured appropriately .
PFDR stashing	Recommend QMan explicitly stash PFDRs: • QMan; the global CPC stash enable bit in the QMan PFDR_AR register must be set . • PAMU; PAACT tables used by PAMU must also be configured appropriately .
SFDR reservation threshold	Set SFDR reservation threshold in QMan SFDR configuration register to: • Total number of FQs using reserved SFDRs times 5 (5 SFDRs per FQ) plus 3 extra SFDRs as required by QMan. Recommend that all egress FQs use reserved SFDRs .

Table 67. Network Interface Ingress FQs Guidelines Summary

Parameter or subject	Guideline
Maximum number of ingress FQs for all ingress interfaces on the device (including any of the separate FQs that are used to serve as an order restoration point (ORP))	1024 FQs
Maximum number of ingress FQs per work queue.	• 64 FQs per work queue if the aggregate bandwidth of the configured network interface(s) on the device is higher than 10 Gbit/s. • 128 FQs per work queue if the aggregate bandwidth of the configured network interface(s) on the device is 10 Gbit/s or lower.

Table continues on the next page...

Table 67. Network Interface Ingress FQs Guidelines Summary (continued)

Parameter or subject	Guideline
The maximum aggregate bandwidth of the configured network interface(s) on the device receiving packets into FQs associated to the same work queue	10 Gbit/s
Within a pool channel, minimum number of FQs per active portal (cores).	4 FQs
Within a dedicated channel, minimum number of FQs:	1 FQ
Assignment to high priority work queues.	Should be limited enough to leave sufficient SFDRs for FQs not using the reserved SFDRs (e.g. ingress FQs assigned to medium or low priority work queues).
Order restoration point (ORP).	A separate FQ should be allocated and dedicated to serve as the ORP for each ingress FQ supporting order restoration.
Ingress FQ descriptor load balancing and performance related settings.	• Prefer_in_Cache: 1 • CPC Stash Enable: 1 • ORP_Enable: 0 • Avoid_Blocking: — 0 if static distribution or dynamic load balancing with order preservation. — 1 if dynamic load balancing with order restoration. • Hold_Active — 0 if static distribution or dynamic load balancing with order restoration . — 1 if dynamic load balancing with order preservation. • Force_SFDR_Allocate: 0 unless FQ needs performance optimization. • Intra-Class Scheduling Credit: 0 unless a more advanced scheduling scheme is required.
ORP FQ descriptor order restoration and performance related settings.	• Prefer_in_Cache: 1 • CPC Stash Enable: 1 • ORP_Enable: 1 • Avoid_Blocking: 0 • Hold_Active: 0 • Force_SFDR_Allocate: 0 • ORP Restoration Window Size: 2 (corresponds to window size of 128 frames). • Class Scheduling Credit: 0

Table 68. Network Interface Egress FQs Guidelines Summary

Parameter or subject	Guideline
Maximum number of egress FQs for all network interfaces.	128 FQs
Minimum number of egress FQs per network interface.	1 FQ
Maximum number of egress FQs per work queue.	8 FQs
Egress FQ descriptor performance related settings.	• Prefer_in_Cache: 1 • CPC Stash Enable: 1 • ORP_Enable: 0 • Avoid_Blocking: 0 • Hold_Active: 0 • Force_SFDR_Allocate: 1 • Class Scheduling Credit: 0 unless a more advanced scheduling scheme is required.

Table 69. Accelerator FQs Guidelines Summary

Parameter or subject	Guideline
Assignment to high priority work queues.	Should be limited enough to leave sufficient SFDRs for FQs not using the reserved SFDRs (e.g. accelerator FQs assigned to medium or low priority work queues).
Egress FQ descriptor performance related settings.	• Prefer_in_Cache: 0 • CPC Stash Enable: 1 • ORP_Enable: 0 • Avoid_Blocking: 0 • Hold_Active: 0 • Force_SFDR_Allocate: 0 unless FQ needs performance optimization . • Class Scheduling Credit: 0 unless a more advanced scheduling scheme is required .

8.2.5 Frame Manager

8.2.5.1 Frame Manager Linux Driver User Guide

8.2.5.1.1 Introduction

This part is describing the Linux implementation of the driver for the Frame Manager, or FMD.

The Linux FMD implements a set of standard Linux character devices that rely on underlying OS-agnostic FMan drivers to do the actual communication with the hardware. The figure below describes this best:

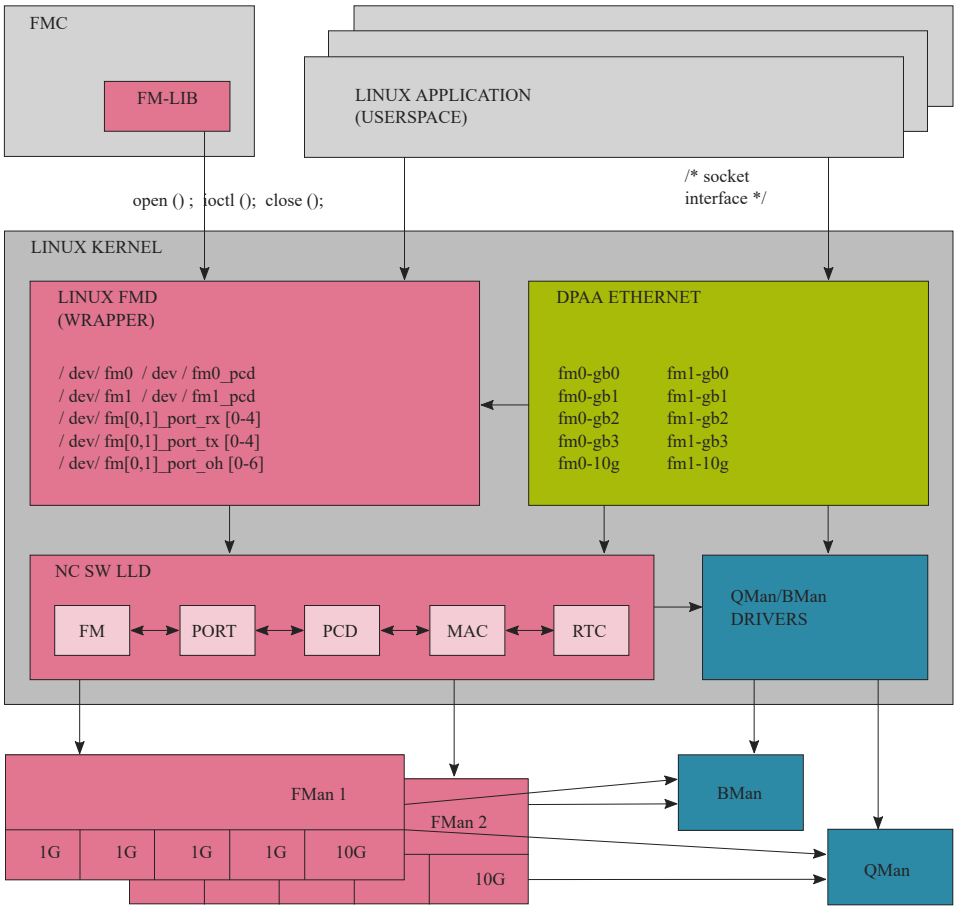

Figure 86. FMan-centric view of relationships between DPAA software and hardware blocks in the Linux environment.

The features of the Linux FMan Driver are the following:

- Performs initialization of the Frame Manager based on platform configuration (device tree), and on probing of the actual hardware;
- Supports Linux user space applications looking to create FMan PCD configurations;
- Attaches/detaches PCDs to/from FMan ports;
- Reports FMan and port status:
  - FMan registers
  - FMan statistics
  - FMan port and MAC counters

The Linux FMan driver does not handle actual network traffic. Network traffic in Linux is being handled exclusively by Linux network devices. Network traffic going through FMan can only be handled by the Linux DPAA Ethernet driver. Although the DPAA Ethernet and the Linux FMan Driver share strong links and interdependencies with the underlaying low-level FMD and with each other, their feature sets do not overlap. The DPAA1 Ethernet driver is described in the Linux Ethernet section.

8.2.5.1.2 The Linux FMD Devices

The Linux interface to the FMD consists in several Linux character devices:

- `/dev/fm[0,1]`, each corresponding to an actual Frame Manager;
- `/dev/fm[0,1]-pcd` are PCD devices corresponding each to a Frame Manager;
- `/dev/fm[0,1]-port-rx[0-4]`, and `/dev/fm[0,1]-port-tx[0-4]` corresponding to the physical ports of each FMan: each rx/tx device in a pair corresponds to the receive and transmit sides of a physical port;
- `/dev/fm[0,1]-port-oh[0-6]` correspond to the Offline Parsing ports.

These devicesare created and initialized at boot time, based on probing of the physical hardware, as well as on the parsing of the device tree. Each of the physical ports can thus be disabled from the device tree, but also from the Reset Configuration Word (RCW). See the SoC's Reference Manual for more details.

NOTE

The assumption for the remainder of this section is that the device tree and the RCW are immutable.

Depending on the SoC and `RCW/.dts` configuration, only certain devices are available . The mapping of the devices to the physical ports is given by the following table:

Table 70. Mapping of Linux devices to low-level port IDs.

Linux Device	Low-Level ID	Identification
`/dev/fm0-port-rx0 /dev/fm0-port-tx0`	0	1st FMan's 1st 1GbE Receive, Transmit
`/dev/fm0-port-rx1 /dev/fm0-port-tx1`	1	1st FMan's 2nd GbE Receive, Transmit
`/dev/fm0-port-rx2 /dev/fm0-port-tx2`	2	1st FMan's 3rd GbE Receive, Transmit
`/dev/fm0-port-rx3 /dev/fm0-port-tx3`	3	1st FMan's 4th GbE Receive, Transmit
`/dev/fm0-port-rx4 /dev/fm0-port-tx4`	4	1st FMan's 5th GbE Receive, Transmit
`/dev/fm0-port-rx5 /dev/fm0-port-tx5`	5	1st FMan's 6th GbE Receive, Transmit
`/dev/fm0-port-rx6 /dev/fm0-port-tx6`	6	1st FMan's 1st 10Gb Receive, Transmit
`/dev/fm0-port-rx7 /dev/fm0-port-tx7`	7	1st FMan's 2nd 10Gb Receive, Transmit
N/A	0	1st FMan's Host Command
`/dev/fm0-port-oh0`	1	1st FMan's 1st Offline Parsing
`/dev/fm0-port-oh1`	2	1st FMan's 2nd Oflline Parsing
`/dev/fm0-port-oh2`	3	1st FMan's 3rd Offline Parsing
`/dev/fm0-port-oh3`	4	1st FMan's 4th Offline Parsing
`/dev/fm0-port-oh4`	5	1st FMan's 5th Offline Parsing
`/dev/fm0-port-oh5`	6	1st FMan's 6th Offline Parsing
`/dev/fm0-port-oh6`	7	1st FMan's 7th Offline Parsing

Table continues on the next page...

Table 70. Mapping of Linux devices to low-level port IDs. (continued)

Linux Device	Low-Level ID	Identification
/dev/fm1-port-rx0 /dev/fm1-port-tx0	0	2nd FMan's 1st 1GbE Receive, Transmit
/dev/fm1-port-rx1 /dev/fm1-port-tx1	1	2nd FMan's 2nd 1GbE Receive, Transmit
/dev/fm1-port-rx2 /dev/fm1-port-tx2	2	2nd FMan's 3rd 1GbE Receive, Transmit
/dev/fm1-port-rx3 /dev/fm1-port-tx3	3	2nd FMan's 4th 1GbE Receive, Transmit
/dev/fm1-port-rx4 /dev/fm1-port-tx4	4	2nd FMan's 5th 1GbE Receive, Transmit
/dev/fm1-port-rx5 /dev/fm1-port-tx5	5	2nd FMan's 10Gb Receive, Transmit
/dev/fm1-port-rx6 /dev/fm1-port-tx6	6	2nd FMan's 1st 10Gb Receive, Transmit
/dev/fm1-port-rx7 /dev/fm1-port-tx7	7	2nd FMan's 2nd 10Gb Receive, Transmit
N/A	0	2nd FMan's Host Command
/dev/fm1-port-oh0	1	2nd FMan's 1st Offline Parsing Port
/dev/fm1-port-oh1	2	2nd FMan's 2nd Offline Parsing Port
/dev/fm1-port-oh2	3	2nd FMan's 3rd Offline Parsing Port
/dev/fm1-port-oh3	4	2nd FMan's 4th Offline Parsing Port
/dev/fm1-port-oh4	5	2nd FMan's 5th Offline Parsing Port
/dev/fm1-port-oh5	6	2nd FMan's 6th Offline Parsing Port
/dev/fm1-port-oh6	7	2nd FMan's 7th Offline Parsing Port

The Low Level IDs are the IDs that are used by the Low Level Drivers (upon which the Linux FMan Driver is based) to distinguish between the physical ports. It is obvious from the above table that the port ID alone does not allow for uniquely identifying a single port. It has to be combined wiht the following information in order to succeesfully point to the desired port:

- FMan ID: 0 or 1 for FMan1 or FMan2, respectively;
- Port type: 1G, 10G or O/H (Offline Parsing/Host Command).

Although all this may seem confusing at first, the LLD API provides convenient enums/macros to deal with these aspects. Furthermore, the FMD driver API tries its best to hide these details from the userspace Linux programmer, specifically by using dedicated /dev entries for each port, etc. However, not all userspace-visible API is free of such port IDs, so this is why we even mention them here.

The FMD LLD uses no distinct port IDs for Rx and Tx, the distinction between Receive and Transmit being made by calling distinct Rx/Tx-specific functions, or by specifying the "RX" or "TX" direction as a separate argument.

The Host Command ports are invisible to the Linux application. One needs to be aware, though, of their mere existence at the least, since the LLD allocates the first physical O/H port of every FMan to this purpose ("O/H" standing for "Offline Parsing/Host Command"). There are 8 such O/H ports on each FMan that can be used for these purposes; the first of these having been

dedicated by the LLD to Host Commands, while the remaining 7 being available for Offline Parsing. Host Commands are just one of the vehicles through which the LLD exercises control of the FMan hardware.

NOTE

Please note that depending on the platform, RCW, and .dts configuration not all the possible combinations of devices and ports are possible, and most certainly some will be missing from any existing configuration. For details regarding possible port & device configurations for a specific platform, please consult the Reference Manuals for that platform, as well as the relevant chapters from the SDK documentation for that platform.

Alongside these character devices, and out of the scope of this writing, are the Linux network devices, labeled using the `fm[1,2]-mac[1-10]` (e.g. `fm1-mac1`, `fm2-mac3`) scheme, which provides the means for Linux to handle actual network traffic, i.e. "traffic termination". These network devices are instances of the Linux DPAA Ethernet Driver, which is architected as a separate entity from the Linux FMan Driver, but which both make use at some point of the same Low-Level Driver FMD API. The feature sets of the DPAA Ethernet and of the Linux FMan drivers are disjunct, though, which is the main reason for their coexistence.

NOTE

There is no requirement that these are the only network devices in the system. You may find the well known `eth0`, `eth1`, etc. devices alongside e.g. `fm1-mac1`, except that these other network devices will correspond to other vendors' NICs that may be installed in the system and will be serviced by vendor-specific, non-DPAA, Ethernet drivers.

There are a few constants #defined in the headers that need to be included when working with the Linux FMD (in both kernel and user spaces) that may come in handy when having to deal with devices and port IDs:

- `FM_MAX_NUM_OF_1G_RX_PORTS`
- `FM_MAX_NUM_OF_10G_RX_PORTS`
- `FM_MAX_NUM_OF_1G_TX_PORTS`
- `FM_MAX_NUM_OF_10G_RX_PORTS`
- `FM_MAX_NUM_OF_RX_PORTS`
- `FM_MAX_NUM_OF_TX_PORTS`
- `FM_MAX_NUM_OF_OH_PORTS`
- `IOC_FM_MAX_NUM_OF_VALID_PORTS`

that together with `INTG_MAX_NUM_OF_FM` can give the programmer the essential tools to get around in a specific configuration (this list, though, is not exhaustive: please consult the relevant API Reference/header files before attempting to #define your own).

Also, the

```
$ ls /dev/fm*
```

Linux shell command can conveniently show all the FMD devices currently available in the target system.

8.2.5.1.3 Linux FMD Programming Model

Given the Linux devices presented earlier, a Linux application looking to use the FMan features can use the general Linux character device syscall interface:

- open()/close() - this is essential API when working with Linux devices.
- read()/write() - although read() and write() operations are mandatory to be implemented by all Linux devices, there are no read/write semantics associated with the FMD devices.
- ioctl() calls are used extensively as the only means to communicate with the hardware. The ioctl API does little more than delegating the ioctl() syscall to the underlying LLD API (for the actual mapping of IOCTLs to actual LLD APIs, please consult the tables available in the following sections).

We'll state here once more that the programming model is essentially that of the FMD LLD. The Linux wrapper merely adapts the LLD to the Linux interface requirements. This part of the SDK documentation focuses only on the Linux specifics. For details regarding individual API calls, please refer to the *Frame Manager Driver API Reference Manual* .

As is the case with any Linux device, the general sequence of actions when using the FMD devices is the following:

1. Linux boots: all `/dev/fm*` devices are being created, FMan resources initialized according to platform/RCW/.dts;
2. User launches FMD-aware application;
3. User app. performs open() on selected `/dev/fm*` device/s;
4. User app. performs ioctl() call/s on the `fd` returned by the previous successful open() call;
5. When the user app. decides it has finished working with selected `/dev/fm*` device, it must call close() on its `fd`, just like on any other Linux device.

Not all the LLD functions have a correspondent in the FMD IOCTLs. Only those functions have been selected which makes sense from an architectural standpoint. The same/other LLD functions are also being called by the Linux wrapper unrestrictedly, as needed to perform its required actions, and not only in response to `ioctl()` calls.

The arguments of the ioctl() calls can be quite complex, and may have complex requirements, as they are described in the **LLD API Reference** (Frame Manager Driver API Documentation).

The following required low-level initialization APIs: FM_Config(), FM_PCD_Config(), FM_PORT_Config(), and subsequently FM_Init(), FM_PCD_Init(), FM_PORT_Init() are being called from within the Linux FMD initialization code at boot time. They are therefore not accessible to the user space application. Any configuration of FMan hardware resources will be performed using Linux-specific means: device tree, kernel build configuration, etc. Code in the DPAA Ethernet driver also initializes the configured MACs using FM_MAC_Config(), then FM_MAC_Init(), as required by the *Frame Manager Driver API Reference Manual*, and as described in *The DPAA Ethernet Driver's User Manual*.

The correspondence between FMD Linux devices and DPAA ETH network devices is intuitive: there is a pair of `/dev/fmX-port-(rxY|txY)` devices for each `fmX-gbY` or `fmX-10g` device in the system. However, due to configuration, it is possible that at boot time not all FMan ports be probed by the DPAA Ethernet driver, hence not all `/dev/fmX-port-(rxY|txY)` may have a corresponding netdev. This is because the FMan port devices and the DPAA Ethernet devices are being configured in different sections of the device tree. The binding between these devices is also done in the device tree.

While Offline Parsing ports are being fully supported by the FMan Driver, currently it is not possible to inject traffic from user space to these ports, as there is no netdev being created for them, as the Linux FMD does not handle traffic. There is indeed a way for kernel space drivers to use them, but that is out of scope here.

It is not to be expected that a FMan port device for which a corresponding DPAA Ethernet netdev has not been configured, to be fully functional. That is because port functionality is reliant also upon additional DPAA resources (i.e. frame queues, buffer pools) that are being initialized exclusively by the DPAA Ethernet driver. Therefore, even though `/dev/fmX-port-*` devices may exist for such ports, trying to access them may result in an error.

FM_PORT_Enable() and FM_PORT_Disable() are called for specific ports during `ifconfig up/down` of the corresponding network device (DPAA Ethernet-specific). They are also available as IOCTLs for the `/dev/fmX-port*` devices, but while in the DPAA Ethernet they are called for both ports of the RX/TX pair, the `/dev/fmX-port-(rxY|txY)` allow for selectively enabling/disabling of only one of the RX/TX sides, as desired.

The ioctl() API conforms to Linux rules for all FMD devices. However, errors originating within the LLD will invariably be reported to the user as `-EFAULT`. All such errors should be considered non-recoverable and should be immediately followed by a close() on the device for which they were reported. A more descriptive message should be printed on the bootup console only, identifying the LLD function, and the line in the source file where the error has occurred. One can look at the documentation for `enum e_ErrorType` in the **LLD API Reference** (Frame Manager Driver API Documentation) for details regarding all the possible LLD error codes and their general meaning.

The following sections will present a brief description of each type of Linux device, as well as their IOCTLs' mapping to the FMD LLD API.

8.2.5.1.4 Frame Manager Linux Driver API Reference

This document describes the interface (IOCTLs) to the Frame Manager Linux Driver as apparent to user space Linux applications that need to use any of the Frame Manager's features. It describes the structure, concept, functionality, and high level API.

8.2.5.1.4.1 The Linux FMan Device

This device corresponds to an individual Frame Manager, and is required for performing FMan-wide actions. The FMan device merely acts as a portal for the IOCTLs that are listed in the table below:

Table 71. IOCTLs for the FMan Device

IOCTL	LLD Mapping	Brief
FM_IOC_SET_PORTS_BANDWIDTH	FM_SetPortsBandwidth()	Sets ports' bandwidths as percentage of total bandwidth.
FM_IOC_GET_REVISION	FM_GetRevision()	API to get the FMan's revision.
FM_IOC_GET_COUNTER	FM_GetCounter()	API to read FMan hardware counters (also available through sysfs).
FM_IOC_SET_COUNTER	FM_ModifyCounter()	API to modify/reset FMan's counters.
FM_IOC_FORCE_INTR	FM_ForceIntr()	Forces an FMan interrupt (or exception). Dangerous! Use for debugging only!
FM_IOC_GET_API_VERSION	FM_GetApiVersion()	Reads the FMD IOCTL API version.
FM_IOC_VSP_CONFIG	FM_VSP_Config()	Creates descriptor for the FM VSP module.
FM_IOC_VSP_INIT	FM_VSP_Init()	Initializes the FM VSP module
FM_IOC_VSP_FREE	FM_VSP_Free()	Frees all resources that were assigned to FM VSP module.
FM_IOC_VSP_CONFIG_POOL_DEPLETION	FM_VSP_ConfigPoolDepletion()	Calling this routine enables pause frame generation depending on the depletion status of BM pools. It also defines the conditions to activate this functionality. By default, this functionality is disabled.
FM_IOC_VSP_CONFIG_BUFFER_PREFIX_CONTENT	FM_VSP_ConfigBufferPrefixContent()	Defines the structure, size and content of the application buffer.
FM_IOC_VSP_CONFIG_NO_SG	FM_VSP_ConfigNoScatherGather()	Returns the pointer to the parse result in the data buffer. In Rx ports this is relevant after reception, if parse result is configured to be part of the data passed to the application. For non Rx ports it may be used to get the pointer of the area in the buffer where parse result should be initialized - if so configured. See FM_VSP_ConfigBufferPrefixContent for data buffer prefix configuration.
FM_IOC_CTRL_MON_START	FM_CtrlMonStart()	Start monitoring utilization of all available FM controllers.

Table continues on the next page...

Table 71. IOCTLs for the FMan Device (continued)

IOCTL	LLD Mapping	Brief
FM_IOC_CTRL_MON_STOP	FM_CtrlMonStop()	Stop monitoring utilization of all available FM controllers.
FM_IOC_CTRL_MON_GET_COUNTERS	FM_CtrlMonGetCounters()	Obtain FM controller utilization parameters.

All the IOCTL-mapped LLD APIs are what the LLD terms as "callable at runtime", i.e. callable after the LLD Init() function for the corresponding entity has been called. This is so because by the time the user app. gets to invoke ioctl(), all the Init() functions have already been called by the initialization code of the Linux FMD at boot time.

8.2.5.1.4.2 The Linux PCD Device

There is exactly one PCD device, or `/dev/fmX-pcd`, for each Frame Manager. The reason for that is that PCDs are FMan-wide constructs, and are applied simultaneously to traffic being received on possibly more than one port.

"PCD" is a generic term designating a Parse-Classify-Distribute configuration for a group of ports, as described in detail in the **QorIQ Data Path Acceleration Architecture (DPAA) Reference Manual**. In short, what a PCD does is to route incoming traffic from a set of RX ports onto several frame queues managed by the Queue Manager. Such frame queues may be attached to a DPAA Ethernet network device, in which case the traffic is received by the CPUs (or "terminated"), or they can be connected to a TX port, in which case the traffic is being forwarded onto that port. Also, frame queues can be further grouped into work queues & policed, etc. (please read the QMan documentation). However, one thing is not supported in the Linux environment, and that is: direct access to frame queues from user space (please note that this is not a limitation of the Linux FMD, but one enforced by design in the Linux driver for the QMan). Not in the classical meaning of "Linux environment", that is.

There's still a lot that can be achieved with the Linux FMD, and the Linux PCD device is there to help. Its role is to manage the PCDs for its associated FMan. The ioctls for this device are mapped to the similarly-sounding FM_PCD_*() LLD APIs:

Table 72. IOCTL List for the PCD Device

IOCTL	LLD Mapping	Brief
FM_PCD_IOC_ENABLE	FM_PCD_Enable()	Should be called after PCD is initialized for enabling all PCD engines according to their existing configuration.
FM_PCD_IOC_DISABLE	FM_PCD_Disable()	Disables an existing PCD.
FM_PCD_IOC_PRS_LOAD_SW[_COMPAT]	FM_PCD_PrsLoadSw()	This routine may be called only when all ports in the system are actively using the classification plan scheme. In such cases it is recommended in order to save resources. The driver automatically saves 8 classification plans for ports that do NOT use the classification plan mechanism; to avoid this (in order to save those entries) this routine may be called.
FM_PCD_IOC_KG_SET_DFLT_VALUE	FM_PCD_KgSetDfltValue()	Sets a global default value to be used by the key generator when the parser does not recognize a required field/header (default 0).

Table continues on the next page...

Table 72. IOCTL List for the PCD Device (continued)

IOCTL	LLD Mapping	Brief
FM_PCD_IOC_KG_SET_ADDITIONAL_DATA_AFTER_PARSING	FM_PCD_KgSetAdditionalDataAfterParsing()	Calling this routine allows the keygen to access data past the parser finishing point.
FM_PCD_IOC_SET_EXCEPTION	FM_PCD_SetException()	Enables/disables PCD interrupts.
FM_PCD_IOC_GET_COUNTER	N/A	Unimplemented, do not use!
FM_PCD_IOC_SET_COUNTER	N/A	Placeholder, do not use!
FM_PCD_IOC_FORCE_INTR	FM_PCD_ForceIntr()	Forces a PCD interrupt (exception) of specified type. Dangerous! Use only for debugging!
FM_PCD_IOC_NET_ENV_CHARACTERISTICS_SET[_COMPAT]	FM_PCD_NetEnvCharacteristicsSet()	Establishes a minimal set of networking protocols ("Network Environment Characteristics") that can be discovered by this PCD (please refer to the Reference Manual for details).
FM_PCD_IOC_NET_ENV_CHARACTERISTICS_DELETE[_COMPAT]	FM_PCD_NetEnvCharacteristicsDelete()	Deletes a set of "Network Environment Characteristics".
FM_PCD_IOC_KG_SCHEME_SET[_COMPAT]	FM_PCD_KgSchemeSet()	Initializes or modifies and enables a scheme for the KeyGen. This routine should be called for adding or modifying a scheme. When a scheme needs modifying, the API requires that it be rewritten. In such a case `modify` should be TRUE. If the routine is called for a valid scheme and `modify` is FALSE, it will return error.
FM_PCD_IOC_KG_SCHEME_DELETE[_COMPAT]	FM_PCD_KgSchemeDelete()	Deletes an initialized scheme.
FM_PCD_IOC_CC_ROOT_BUILD[_COMPAT]	FM_PCD_CcRootBuild()	This routine must be called to define a complete coarse classification tree. This is the way to define coarse classification to a certain flow - the KeyGen schemes may point only to trees defined in this way.
FM_PCD_IOC_CC_ROOT_DELETE[_COMPAT]	FM_PCD_CcRootDelete()	Deletes an existing coarse classification tree.
FM_PCD_IOC_MATCH_TABLE_SET[_COMPAT]	FM_PCD_MatchTableSet()	This routine should be called for each CC (coarse classification) node. The whole CC tree should be built bottom up so that each node points to already defined

Table continues on the next page...

Table 72. IOCTL List for the PCD Device (continued)

IOCTL	LLD Mapping	Brief
		nodes. `p_node_id` returns the node Id to be used by other nodes.
`FM_PCD_IOC_MATCH_TABLE_DELETE[_COMPAT]`	FM_PCD_MatchTableDelete()	Deletes a built node.
`FM_PCD_IOC_CC_ROOT_MODIFY_NEXT_ENGINE[_COMPAT]`	FM_PCD_CcRootModifyNextEngine()	Modifies the Next Engine Parameters in the entry of the tree (allowed only after FM_PCD_CcBuildTree()).
`FM_PCD_IOC_MATCH_TABLE_MODIFY_NEXT_ENGINE[_COMPAT]`	FM_PCD_MatchTableModifyNextEngine()	Modifies the Next Engine Parameters in the relevant key entry of the node (possible only after a call to FM_PCD_MatchTableSet()).
`FM_PCD_IOC_MATCH_TABLE_MODIFY_MISS_NEXT_ENGINE[_COMPAT]`	FM_PCD_MatchTableModifyMissNextEngine()	Modifies the Next Engine Parameters of the Miss key case of the node (allowed only after a previous call to FM_PCD_MatchTableSet()).
`FM_PCD_IOC_MATCH_TABLE_REMOVE_KEY[_COMPAT]`	FM_PCD_MatchTableRemoveKey()	Removes the key (including its next engine parameters) defined by the index of the relevant node (allowed only after a previous call to FM_PCD_MatchTableSet())
`FM_PCD_IOC_MATCH_TABLE_ADD_KEY[_COMPAT]`	FM_PCD_MatchTableAddKey()	Adds the key (including next engine parameters of this key) in the index defined by `key_index` (allowed only after a previous call to FM_PCD_MatchTableSet())
`FM_PCD_IOC_MATCH_TABLE_MODIFY_KEY_AND_NEXT_ENGINE[_COMPAT]`	FM_PCD_MatchTableModifyKeyAndNextEngine()	Modifies the key and Next Engine Parameters of this key in the index defined by `key_index` (allowed only after a previous call to FM_PCD_MatchTableSet()).
`FM_PCD_IOC_MATCH_TABLE_MODIFY_KEY[_COMPAT]`	FM_PCD_MatchTableModifyKey()	Modifies the key at the index defined by `key_index` (allowed only after a previous call to FM_PCD_MatchTableSet()).
`FM_PCD_IOC_HASH_TABLE_SET[_COMPAT]`	FM_PCD_HashTableSet()	Initializes a hash table structure.
`FM_PCD_IOC_HASH_TABLE_DELETE[_COMPAT]`	FM_PCD_HashTableDelete()	Deletes the provided hash table and released all its allocated resources.
`FM_PCD_IOC_HASH_TABLE_ADD_KEY[_COMPAT]`	FM_PCD_HashTableAddKey()	Adds the provided key (including next engine parameters of this key) to the

Table continues on the next page...

Table 72. IOCTL List for the PCD Device (continued)

IOCTL	LLD Mapping	Brief
		hash table. The key is added as the last key of the bucket that it is mapped to.
FM_PCD_IOC_HASH_TABLE_REMOVE_KEY[_COMPAT]	FM_PCD_HashTableRemoveKey()	Removes the requested key (including its next engine parameters) from the hash table.
FM_PCD_IOC_PLCR_PROFILE_SET[_COMPAT]	FM_PCD_PlcrProfileSet()	Sets a profile entry in the policer profile table, overriding any existing value.
FM_PCD_IOC_PLCR_PROFILE_DELETE[_COMPAT]	FM_PCD_PlcrProfileDelete()	Deletes a profile entry in the policer profile table. It sets the entry to invalid.
FM_PCD_IOC_MANIP_NODE_SET[_COMPAT]	FM_PCD_ManipNodeSet()	This routine should be called for defining a manipulation node. A manipulation node must be defined before the CC node that precedes it.
FM_PCD_IOC_MANIP_NODE_REPLACE[_COMPAT]	FM_PCD_ManipNodeReplace()	Change existing manipulation node to be according to new requirement.
FM_PCD_IOC_MANIP_NODE_DELETE[_COMPAT]	FM_PCD_ManipNodeDelete()	Deletes an existing manipulation node.
FM_PCD_IOC_SET_ADVANCED_OFFLOAD_SUPPORT	FM_PCD_SetAdvancedOffloadSupport()	This routine must be called in order to support the following features: IP-fragmentation, IP-reassembly, IPsec, header manipulation, frame replicator.
FM_PCD_IOC_FRM_REPLIC_GROUP_SET[_COMPAT]	FM_PCD_FrmReplicSetGroup()	Initialize a Frame Replicator group.
FM_PCD_IOC_FRM_REPLIC_GROUP_DELETE[_COMPAT]	FM_PCD_FrmReplicDeleteGroup()	Delete a Frame Replicator group.
FM_PCD_IOC_FRM_REPLIC_MEMBER_ADD[_COMPAT]	FM_PCD_FrmReplicAddMember()	Add the member in the index defined by the memberIndex.
FM_PCD_IOC_FRM_REPLIC_MEMBER_REMOVE[_COMPAT]	FM_PCD_FrmReplicRemoveMember()	Remove the member defined by the index from the relevant group.
FM_PCD_IOC_STATISTICS_SET_NODE[_COMPAT]	FM_PCD_StatisticsSetNode()	Not implemented in this release. Do not use!
FM_PCD_IOC_KG_SCHEME_GET_CNTR	FM_PCD_KgSchemeGetCounter()	Reads scheme packet counter.

NOTE

The _COMPAT variants of certain IOCTLs in the above table are required for supporting 32-bit user space apps. on 64-bit Linux kernels. The specifics of the COMPAT mappings are documented by Linux.

The programming model for defining and managing PCDs for a group of ports is the same as described in the **FMD LLD User's Guide** .

What follows is a step-by-step description of an example of ioctl() call mapping to a LLD API call.

The example chosen for this walk-through is that of `FM_PCD_IOC_MATCH_TABLE_SET`. Here's a reminder of the ioctl() prototype:

```
extern int ioctl (int __fd, unsigned long int __request, ...) __THROW;
```

and below is how it appears to kernel space:

```
struct file_operations {
 [...]
 long (*unlocked_ioctl) (struct file *, unsigned int, unsigned long);
 [...]
};
```

The ioctl() function is actually a pointer to a driver-supplied function having the specified signature. The glue between the two is kernel code.

The semantics associated with the second and third function arguments are entirely the driver's business, but usually the `unsigned int` argument is used to discriminate between various ioctl commands (actually, it should obey some Linux good-behavior rules, which we are not going to detail here). In our case, it should be `FM_PCD_IOC_MATCH_TABLE_SET`.

Linux attaches no predefined semantics to the third argument, the `unsigned long` one. In some cases it is unused, or its semantics are those of an unsigned integer number, but in most cases it is treated as a (32-bit, on most platforms) pointer to a driver-defined structure in user space. The driver defines the format, but the user space allocates and fills in the data prior to invoking ioctl() on the open device `fd`. This is also the case with our example.

The format of the third argument of the `FM_PCD_IOC_MATCH_TABLE_SET` ioctl is (as it actually appears in the header file where it's defined):

```
/**************************************************************************//**
 @Description   A structure for defining the CC node params
*//***************************************************************************/
typedef struct ioc_fm_pcd_cc_node_params_t {
    ioc_fm_pcd_extract_entry_t extract_cc_params;
                                            /**< params which defines extraction
                                            parameters */

    ioc_keys_params_t          keys_params;    /**< params which defines Keys
                                            parameters of the extraction defined
                                            in extract_cc_params */

    void                       *id;            /**< output parameter;
                                            Returns the CC node Id to be used */
} ioc_fm_pcd_cc_node_params_t;
```

We'll detail the `ioc_*` types of the first two members later. The third member of this structure is apparently a pointer to some data structure being returned back to user space. It is not the case. This actual pointer should be handled as an opaque handle to some abstract item, in our case the "CC Node" that's being created for us by this ioctl() call if successful. This handle can be later passed to e.g. the `FM_PCD_IOC_MATCH_TABLE_DELETE` IOCTL for deletion. It corresponds to an actual `t_Handle`, as defined by the LLD.

NOTE

Failing to cleanup FMan resources that the LLD allocates in this manner can cause serious hardware resource leaks, which neither the Linux FMD, nor the LLD have the means to detect & cleanup automatically!

The LLD function that this IOCTL maps to has the following prototype:

```
t_Handle FM_PCD_MatchTableSet(t_Handle, t_FmPcdCcNodeParams *);
```

The first argument corresponds to the LLD resource that the Linux PCD device maps to. Most of the LLD resources are managed within the Linux FMD driver and not exposed to the user, but there are exceptions and the FM_PCD_MatchTableSet() function here is the best example, as it returns a `t_Handle` to such a LLD resource. This returned `t_Handle` is then passed over to the user space in the opaque `id` member of ioctl()'s third argument.

The second argument is a pointer to a structure of type `t_FmPcdCcNodeParams`. This maps to the `ioc_fm_pcd_cc_node_params_t` type that ioctl()'s third argument points to.

NOTE

Passing to `ioctl()` a pointer to something of a type other than the required one will cause the user application to segfault, or an error, at best, but may also cause undefined FMan behavior from that point onward, with errors being possibly reported only later downstream as the worst case. Linux/the FMD can do very little to prevent this worst case from occurring, so hopefully one can catch such coding errors early during the development cycle.

A side-by-side comparison of the two structures is given in the following table:

Table 73. Side-by-side comparison of IOCTL and LLD types

IOCTL Types	LLD Types

`typedef struct ioc_fm_pcd_cc_node_params_t {`
`  ioc_fm_pcd_extract_entry_t  extract_cc_params;`
`  ioc_keys_params_t  keys_params;`
`  void  *id;`
`} ioc_fm_pcd_cc_node_params_t;`
	`typedef struct t_FmPcdCcNodeParams {`
	`  t_FmPcdExtractEntry  extractCcParams;`
	`  t_KeysParams  keysParams;`
	`} t_FmPcdCcNodeParams;`

`typedef struct ioc_fm_pcd_extract_entry_t {`
`  ioc_fm_pcd_extract_type  type;`
`  union {`
`  struct {`
`  ioc_net_header_type  hdr;`
`  bool  ignore_protocol_validation;`
`  ioc_fm_pcd_hdr_index  hdr_index;`
`  ioc_fm_pcd_extract_by_hdr_type  type;`
`  union {`
`  ioc_fm_pcd_from_hdr_t  from_hdr;`
`  ioc_fm_pcd_from_field_t  from_field;`
`  ioc_fm_pcd_fields_u  full_field;`
`  } extract_by_hdr_type;`
`  } extract_by_hdr;`
 	
`  struct{`
`  ioc_fm_pcd_extract_from  src;`
`  ioc_fm_pcd_action  action;`
`  uint16_t  ic_indx_mask;`
`  uint8_t  offset;`
`  uint8_t  size;`
`  } extract_non_hdr;`
`  } extract_params;`
`} ioc_fm_pcd_extract_entry_t;`
	`typedef struct t_FmPcdExtractEntry {`
	`  e_FmPcdExtractType  type;`
	`  union {`
	`  struct {`
	`  e_NetHeaderType  hdr;`
	`  bool  ignoreProtocolValidation;`
	`  e_FmPcdHdrIndex  hdrIndex;`
	`  e_FmPcdExtractByHdrType  type;`
	`  union {`
	`  t_FmPcdFromHdr  fromHdr;`
	`  t_FmPcdFromField  fromField;`
	`  t_FmPcdFields  fullField;`
	`  } extractByHdrType;`
	`  } extractByHdr;`
	
	`  struct {`
	`  e_FmPcdExtractFrom  src;`
	`  e_FmPcdAction  action;`
	`  uint16_t  icIndxMask;`
	`  uint8_t  offset;`
	`  uint8_t  size;`
	`  } extractNonHdr;`
	`  };`
	`} t_FmPcdExtractEntry;`

Table continues on the next page...

Table 73. Side-by-side comparison of IOCTL and LLD types (continued)

IOCTL Types	LLD Types

`typedef struct ioc_keys_params_t {`
`  uint16_t max_num_of_keys;`
`  bool mask_support;`
`  ioc_fm_pcd_cc_stats_mode statistics_mode;`
`  uint16_t num_of_keys;`
`  uint8_t key_size;`
`  ioc_fm_pcd_cc_key_params_t`
`  key_params[IOC_FM_PCD_MAX_NUM_OF_KEYS];`
`  ioc_fm_pcd_cc_next_engine_params_t`
`  cc_next_engine_params_for_miss;`
`} ioc_keys_params_t;`
	`typedef struct t_KeysParams {`
	`  uint16_t maxNumOfKeys;`
	`  bool maskSupport;`
	`  ioc_fm_pcd_cc_stats_mode statisticsMode;`
	`  uint16_t numOfKeys;`
	`  uint8_t keySize;`
	`  t_FmPcdCcKeyParams`
	`  keyParams[FM_PCD_MAX_NUM_OF_KEYS];`
	`  t_FmPcdCcNextEngineParams`
	`  ccNextEngineParamsForMiss;`
	`} t_KeysParams;`

While the structure members have resembling names on both sides, most are not identical. That's because style has prevailed over the need to port existing LLD applications to the Linux environment, when the Linux FMD was designed. Except for the occasional `*id` pointer, there is a 1:1 mapping between the struct members on the two sides, and that is consistent throughout the FMD.

The constituent structures of the two APIs' argument types given above are for illustration only. Their semantics are documented in the Frame Manager Driver API Documentation .

NOTE

The existence of two separate definitions for otherwise two identical data structures may appear as an unfortunate design decision. However, since a *memcpy* from user space to kernel space is unavoidable, this design decision has no impact over performance. Moreover, the user space only sees one variant (i.e. the `ioc_*` one), hence the even smaller user impact. The larger impact is on code maintenance and on documentation.

8.2.5.1.4.3 The Linux Port Devices

There is a pair of RX/TX Linux character devices for each physical port of every Frame Manager. These devices are created irrespectively of the DPAA1 Ethernet network devices and they are strictly reflecting the available Frame Manager hardware on the given platform. The port Linux devices are labeled as follows:

- `/dev/fmX-port-rxY` for receive, where X=[0,1] represents the FMan number, and Y=[0-7] represents the physical port ID (0 corresponding to the first 1 Gb port, and 6 to the first 10 Gb port), and
- `/dev/fmX-port-txY` correspondingly for the transmit side.

Each FMan also has a number of Offline Parsing ports. These are labeled as `/dev/fmX-port-ohY`, where Y=[0-6].

The port devices are created based on configuration information taken from the relevant Linux device tree section.

For instance, LS1043A has one FMan with 6 x 1Gb ports and one 10Gb port, while LS1046A has one FMan with 6 x 1Gb and 2 x 10Gb ports. A side-by-side comparison of the corresponding port devices is given in the following table:

Table 74. Side-by-side comparison of port devices for LS1043 and LS1046

LS1043A	LS1046A

For the Receive side:
`/dev/fm0-port-rx0`
`/dev/fm0-port-rx1`
`/dev/fm0-port-rx2`
	For the Receive side:
	`/dev/fm0-port-rx0`
	`/dev/fm0-port-rx1`
	`/dev/fm0-port-rx2`

Table continues on the next page...

Table 74. Side-by-side comparison of port devices for LS1043 and LS1046 (continued)

LS1043A	LS1046A
/dev/fm0-port-rx4 /dev/fm0-port-rx5 /dev/fm0-port-rx6	/dev/fm0-port-rx3 /dev/fm0-port-rx4 /dev/fm0-port-rx5 /dev/fm0-port-rx6 /dev/fm0-port-rx7
For the Transmit side: /dev/fm0-port-tx0 /dev/fm0-port-tx1 /dev/fm0-port-tx2 /dev/fm0-port-tx3 /dev/fm0-port-tx4 /dev/fm0-port-tx5 /dev/fm0-port-tx6	For the Transmit side: /dev/fm0-port-tx0 /dev/fm0-port-tx1 /dev/fm0-port-tx2 /dev/fm0-port-tx3 /dev/fm0-port-tx4 /dev/fm0-port-tx5 /dev/fm0-port-tx6 /dev/fm0-port-tx7
For Offline Parsing: /dev/fm0-port-oh0 /dev/fm0-port-oh1 /dev/fm0-port-oh2 /dev/fm0-port-oh3 /dev/fm0-port-oh4 /dev/fm0-port-oh5	For Offline Parsing: /dev/fm0-port-oh0 /dev/fm0-port-oh1 /dev/fm0-port-oh2 /dev/fm0-port-oh3 /dev/fm0-port-oh4 /dev/fm0-port-oh5

The table below summarizes the IOCTLs available for the port device.

Table 75. IOCTLs of the Port Device

IOCTLS	LLD Mapping	Brief
FM_PORT_IOC_DISABLE	FM_PORT_Disable()	Disables the port: all port settings are preserved, but all traffic stops.
FM_PORT_IOC_ENABLE	FM_PORT_Enable()	Enables the port: causes the port to start processing traffic.
FM_PORT_IOC_SET_RATE_LIMIT	FM_PORT_SetRateLimit()	(TX & O/H Only) Activates the Rate Limiting Algorithm for the port.
FM_PORT_IOC_DELETE_RATE_LIMIT	FM_PORT_DeleteRateLimit()	(TX & O/H Only) Deactivates any Rate Limiting.
FM_PORT_IOC_SET_ERRORS_ROUTE	FM_PORT_SetErrorsRoute()	(RX & O/H Only) Instructs the FMD to enqueue frames w/specific errors onto the normal port queues, rather than onto the error queue (i.e. the default).

Table continues on the next page...

Table 75. IOCTLs of the Port Device (continued)

IOCTLS	LLD Mapping	Brief
FM_PORT_IOC_ALLOC_PCD_FQIDS	N/A	For testing/debugging. Do not use!
FM_PORT_IOC_FREE_PCD_FQIDS	N/A	For testing/debugging. Do not use!
FM_PORT_IOC_SET_PCD[_COMPAT]	FM_PORT_SetPCD()	(RX & O/H Only) Defines a PCD configuration for the port.
FM_PORT_IOC_DELETE_PCD	FM_PORT_DeletePCD()	(RX & O/H Only) Deletes the port's PCD configuration.
FM_PORT_IOC_DETACH_PCD	FM_PORT_DetachPCD()	(RX & O/H Only) Disables the PCD configuration for the port (only allowed after FM_PORT_SetPCD() has been called for the port).
FM_PORT_IOC_ATTACH_PCD	FM_PORT_AttachPCD()	(RX & O/H Only) Re-enables the PCD configuration for the port (only valid after a call to FM_PORT_DetachPCD()).
FM_PORT_IOC_PCD_PLCR_ALLOC_PROFILES	FM_PORT_PcdPlcrAllocProfiles()	(RX & O/H Only) Allocates private policer profiles for the port (only allowed before a a call to FM_PORT_SetPCD()).
FM_PORT_IOC_PCD_PLCR_FREE_PROFILES	FM_PORT_PcdPlcrFreeProfiles()	(RX & O/H Only) Frees any private policer profiles allocated for the port (callable only before FM_PORT_SetPCD()).
FM_PORT_IOC_PCD_KG_MODIFY_INITIAL_SCHEME[_COMPAT]	FM_PORT_PcdKgModifyInitialScheme()	(RX & O/H Only) Modifies key generation scheme following frame parsing (callable only after FM_PORT_SetPCD()).
FM_PORT_IOC_PCD_PLCR_MODIFY_INITIAL_PROFILE[_COMPAT]	FM_PORT_PcdPlcrModifyInitialProfile()	(RX & O/H Only) Changes the initial policer profile for the port (callable only after FM_PORT_SetPCD()).
FM_PORT_IOC_PCD_CC_MODIFY_TREE[_COMPAT]	FM_PORT_PcdCcModifyTree()	(RX & O/H Only) Replaces the coarse classification tree if one is used for the port (callable only after FM_PORT_DetachPCD() and before FM_PORT_AttachPCD()).
FM_PORT_IOC_PCD_KG_BIND_SCHEMES[_COMPAT]	FM_PORT_PcdKgBindSchemes()	(RX & O/H Only) Adds more KeyGen schemes for the port to be bound to (callable only after FM_PORT_SetPCD()).
FM_PORT_IOC_PCD_KG_UNBIND_SCHEMES[_COMPAT]	FM_PORT_PcdKgUnbindSchemes()	(RX & O/H Only) Prevents the port from using the specified KG schemes (callable only after FM_PORT_SetPCD())

Table continues on the next page...

Table 75. IOCTLs of the Port Device (continued)

IOCTLS	LLD Mapping	Brief
FM_PORT_IOC_PCD_PRS_MODIFY_START_OFFSET	FM_PORT_PcdPrsModifyStartOffset()	(RX & O/H Only) Changes the frame offset at which parsing starts (callable only after FM_PORT_DetachPCD() and before FM_PORT_AttachPCD()).
FM_PORT_IOC_ADD_CONGESTION_GRPS	FM_PORT_AddCongestionGrps()	(RX & O/H Only) Should be called in order to enable pause frame transmission in case of congestion in one or more of the congestion groups relevant to this port. Each call to this routine may add one or more congestion groups to be considered relevant to this port.
FM_PORT_IOC_REMOVE_CONGESTION_GRPS	FM_PORT_RemoveCongestionGrps()	(RX & O/H Only) Should be called when congestion groups were defined for this port and are no longer relevant, or pause frames transmitting is not required on their behalf. Each call to this routine may remove one or more congestion groups to be considered relevant to this port.
FM_PORT_IOC_ADD_RX_HASH_MAC_ADDR	FM_MAC_AddHashMacAddr()	Add an Address to the hash table. This is for filter purpose only.
FM_PORT_IOC_REMOVE_RX_HASH_MAC_ADDR	FM_MAC_RemoveHashMacAddr()	Delete an Address to the hash table. This is for filter purpose only.
FM_PORT_IOC_SET_TX_PAUSE_FRAMES	FM_MAC_SetTxPauseFrames()	Enable/Disable transmission of Pause-Frames. The routine changes the default configuration: pause-time - [0xf000], threshold-time - [0]
FM_PORT_IOC_GET_MAC_STATISTICS	FM_MAC_GetStatistics()	Get all MAC statistics counters.
FM_PORT_IOC_CONFIG_BUFFER_PREFIX_CONTENT	FM_PORT_ConfigBufferPrefixContent()	Defines the structure, size and content of the application buffer.
FM_PORT_IOC_VSP_ALLOC[_COMPAT]	FM_PORT_VSPAlloc()	This routine allocated VSPs per port and forces the port to work in VSP mode. Note that the port is initialized by default with the physical-storage-profile only.

NOTE

The COMPAT variants of certain IOCTLs in the above table are required for supporting 32-bit user space apps. on 64-bit Linux kernels. The specifics of the COMPAT mappings are documented by Linux.

The programming model for managing the FMan's ports is the same as described in the *Frame Manager Driver API Reference*. A few notable mentions though:

Although all the above IOCTLs are implemented by the Linux FMD, due to the asymmetry between RX and TX, not all are available for any port type. E.g. FM_PORT_IOC_SET_PCD will generate an error if called on a TX port device. Similarly, FM_PORT_IOC_SET_RATE_LIMIT will fail for an RX port. That is because the checking of the port type is being done late, inside the LLD, and not in the Linux FMD (i.e. the ioctl() calls for all port devices delegate to the same function inside the Linux kernel)!

The Offline Parsing ports have the best of both worlds. That is because conceptually, an O/H port is no different from a "regular" FMan port that has the TX side looped back internally to its RX side.

8.2.5.2 Frame Manager Driver User's Guide

8.2.5.2.1 Introduction

The Frame Manager is a hardware accelerator responsible for preprocessing and moving packets into and out of the datapath. It supports in-line/off-line packet parsing and initial classification to enable policing and flow/QoS based packet distribution to the CPUs for further processing of the packets.

The Frame Manager consists of a number of packet processing elements (also referred to as engines) and supports a flexible pipeline. Usually, the main Rx flow (simplified) follows these steps: packets are received from one of the Ethernet MACs, are temporarily stored in the FMan internal memory, then delivered to SoC memory via the FMan DMA. The packet header (max size 256 bytes) is stored and the modules common database structure is allocated. Then the packet is parsed by the parser or by the FMan controller. According to parsing results a key may be extracted by KeyGen, a destination frame-queue-id may be set, the packet may be classified by the FMan controller. in that stage, some offloads may be done like re-assembly, fragmentation, header-manipulation and frame-replication. At the end of the classification and manipulations stage, the packet may be colored by policer. At the end of this process, packets are delivered to SoC memory via the FMan DMA and then are enqueued to a frame queue or dropped. The processing order is Parse-Classify-Distribute (PCD) flow dependant, based on user configurations. Each step is dependant on previous state results. This structure enables flexibility, which efficiently supports many flows.

On Tx the frames are transmitted via the desired MAC with optional checksum generation.

8.2.5.2.2 Frame Manager Features

The FMan driver aims to support the majority of the hardware features. It also includes exclusive software features designed to provides facilitation through abstraction.

Following are the features of the FMan driver:

- Simple initialization and configuration API for the following FMan blocks: DMA, FPM, IRAM, QMI, BMI, and RTC.
- Simple initialization and configuration for the following FMan PCD blocks: Parser, Keygen, Custom-Classifier (CC), Manipulations (e.g. Header-manipulations, IP-reassembly, IP-fragmentation, etc.) and Policer.
- FMan memory (MURAM) management.
- FMan-controller code loading.
- Software-Parser loading.
- Supported all FMan port types-Rx, Tx, Offline-Parsing, and Host-Command (internal use of the driver only)
- Common MAC API for dTSEC, 10G-MAC and mEMAC.
- Provides API for accessing the MII management interface.
- FMan Rx and Tx ports can run in one of the following modes:
  - Independent-Mode
  - Simple BMI-to-BMI (regular) mode
  - Advance PCD mode (using FMan PCD blocks such as parser, Keygen, CC, and Policer).
- FMan Offline ports can run in one of the following modes:
  - Simple BMI-to-BMI (regular) mode
  - Advance PCD mode (using FMan PCD blocks such as parser, Keygen, CC, and Policer)
- Internal (optional) Host-Command port initialization, based on user's parameters.
- FMan IRQ handling - events and exceptions.

- Supports both SMP and AMP operation modes.

8.2.5.2.3 Frame Manager Driver Components

The FMan driver contains following low-level modules, as shown in this figure.

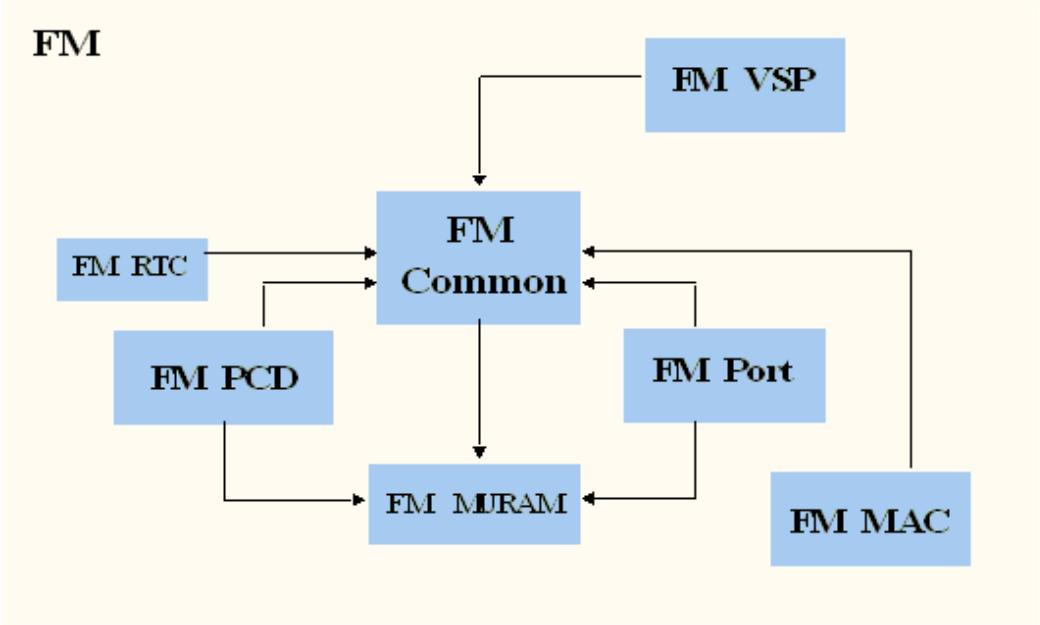

Figure 87. FMan Driver Modules (from a partition point of view)

The modules are as follows:

- Frame Manager (common)-The FMan module is a singleton module within its partition. It is responsible for the common hardware modules: FPM, DMA, common QMI, common BMI, FMan controller's initialization, and runtime control routines. This module must always be initialized when working with any FMan module. The module will mainly be used internally by the other FMan modules except for its initialization by the user.

  This module has an instance for each partition. However, only the driver that is on the master-partition has access to the hardware registers.

- Frame Manager Parser-Classifier-Distributor (FMan-PCD)-The FMan PCD module is a singleton module within its partition. It is responsible of all common parts of the PCD, such as the hardware parser, software parser, Keygen, policer, and custom-classifier blocks. It is responsible for building the PCD graphs.

  This module has an instance for each partition. However, only the driver on the master-partition has access to the hardware registers.

- Frame Manager Memory (FMan-MURAM)-This module is responsible for the specific memory partition of the FMan Memory. Each partition may have its own FMan Memory partition that is managed by the FMan Memory driver. For example, an FMan Memory instance will be created for each partition that has its own FMan ports.

  This module has an instance for each partition.

- Frame Manager Real-Time-Clock (FMan-RTC)-This module is responsible for the FMan RTC module.

  This module is a "singleton" and should be created once only for the master-partition.

- Frame Manger Port (FMan-Port)-This module is responsible for all FMan port-related register space, such as all registers related to a port in QMI or BMI.

  This module can be run by each core or partition independently.

- Frame Manager MAC (FMan-MAC)-This module is responsible for the mEMAC dTSEC and the 10G MAC controllers.

  This module can be run by each core or partition independently.

- Frame Manager Virtual-Storage-Profile (FMan-VSP)-This module is responsible for allocating and managing virtual storage profiles that may used for virtualization purposes. More of the VSP is described in FMan VSP Driver.

  This module can be run by each core or partition independently.

8.2.5.2.4 Driver Modules in the System

The FMan driver is designed to support single or multi partition environment. In addition, the FMan driver is designed to support environment with multicore that are running in SMP mode.

The following figure shows a typical single-partition (maybe SMP or not) environment and its FMan driver building blocks.

NOTE

In this environment:

- All FMan driver modules are available and should be initialized by the user (unless if it is unnecessary for the user operation; for example, if PCD is not needed so it may not be called).
- The FMan driver modules have the full functionality of the hardware.
- Each module has full access to its hardware registers (i.e. each module will access its registers directly).

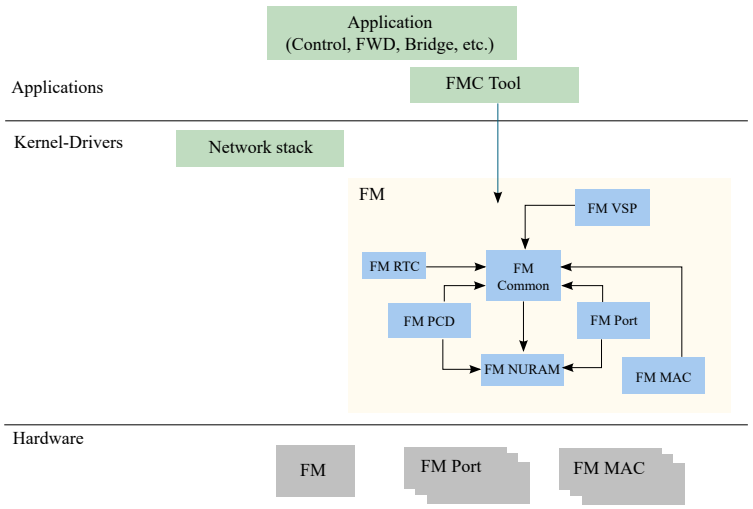

Figure 88. Single-Partition FM Building Blocks

8.2.5.2.4.1 Multicore Approach

The driver supports the Symmetric Multi-Processing (SMP) opperation method.

8.2.5.2.4.1.1 SMP

As a rule, driver routines are not SMP safe. It is user's responsibility to lock all routines that might be in risk in his environment, for example, if `FM_PORT_Enable`/`FM_PORT_Disable` may be used by several cores, it is user's responsibility to protect the routine call using a spinlock.

An exception to this rule is the set of PCD routines. Due to the complexity of this module, and in order to support SMP and maintain coherency, PCD routines are protected using two mechanisms, spinlocks and flags.

Each PCD resource (i.e. software module such as scheme, CC Node, NetEnv, etc.) may have one or more spinlocks which are used to protect short code sections where specific resources such as hardware registers or software structures are accessed. In some cases, a spinlock of a higher level is used (i.e. CC locks the whole PCD).

The second mechanism is defined globally. The PCD global module provides a PcdLock mechanism, which is a list of lock objects containing a flag and a spinlock rotating that flag. On initialization of each PCD resource (i.e. software module such as scheme, CC Node, NetEnv, etc.), a PcdLock is allocated for this module. Critical sections that may not be protected by spinlocks (due to reasons of sections length, Host Commands and other lengthy operations) are protected by these flags. Note that this is a try-lock mechanism and the calling routine returns with `E_BUSY` error on failure. The try-locks are used by all PCD resources modification routines, in which case the application is expected to recall the routine until it is not busy.

In Addition, PCD and FM Port inter-module complex sections may be protected by try-locking all the initialized PcdLock modules in the global PCD, thus providing a safe PCD environment where influence and connections between modules may take effect.

On top of PCD routines, all FM Port PCD related routines are also protected by Port try-lock, meaning no two cores can access the same port to run a PCD routine. As in the PCD routines, these routines may return `E_BUSY` on failure and should then be recalled.

The driver SMP protection mechanism assumes the following:

- Only one core may initialize and delete a specific PCD software module (i.e. scheme x may not be initialized by two cores).
- A core should not attempt to delete a PCD software module when there is a risk of another core operating on that specific module.

8.2.5.2.5 FMan Driver Calling Sequence

Initialization of the FMan driver is carried out by the application according to the following sequence:

1. MURAM configuration & Initialization
2. FMan (common) configuration & Initialization
3. [Optional] FMan RTC configuration & Initialization
4. For each MAC required by the user:
    a. MAC Configuration & Initialization
    b. PHY Initialization
5. For each FMan Port required by the user:
    a. FMan Port Configuration & Initialization
    b. [optional] If the FMan Port required to be virtualized, a set of VSPs need to be allocated and one of them should be set as the default.
    c. [optional] If VSPs were allocated in previous step, the default VSP need to be configured & initialized
    d. in that stage, user should configure and intialize everything that is needed for the operation of a port outside the fman; e.g. buffer-pools, frame-queues, etc.
    e. Port Enablement
    f. MAC Enablement
    g. Calling 'AdjustLink' MAC API routine with the relevant link parameters

    NOTE

    Now, the FMan is operational. The ports operate in independent mode or BMI-to-BMI mode. From that point, all the following steps are optional.
6. FMan PCD Configuration & Initialization
7. If a physical port is being "vitualized" into several software entities (using some classification to ditribute the traffic), user should configure and initialize the relevant buffer-pools and frame-queues.
8. If VSP is enabled, in that stage, user should configure and initialize the relevant profile.
9. FMan PCD Graph initialization:

a. Calling restricted runtime routines (that may be called only when PCD is disabled)

b. Calling the PCD enable routine

c. Initialization of a all PCD Graph objects (i.e. KG-schemes, Match-Tables, etc)

10. FMan port-PCD related initialization; calling the run-time control routines to set the PCD related parameters

NOTE

In case the PCD is "set" to a FMan OP port, it should be disabled first (i.e. before calling 'FM_PORT_SetPCD' routine).

11. FMan runtime routines
12. FMan Free sequence - in reverse order from initialization

8.2.5.2.6 Global FMan Driver

The Global FMan driver refers to the common FMan features - i.e. functionality that is not defined per-port and does not belong to a spany of the specific modules such as PCD, RTC, MURAM, MAC etc.

8.2.5.2.6.1 FMan Hardware Overview

The following Frame Manager processing elements are considered general FMan components and are controlled by the FMan common driver:

- The Frame Processor Manager (FPM) schedules frames for processing by the different elements to create the appropriate pipeline.
- The BMI is intended to transfer data between network and internal FMan memory, generate frame descriptor (FD), initialize the internal context (IC), manage the internal buffers, allocate/deallocate external buffers with the help of BMan and activate the DMA to transfer data between internal and external RAMs
- The DMA is responsible for frames data transfer from and to external memory
- The queue manager interface (QMI) is responsible for transferring packet-based work assignments between the queue manager (QMan) and the frame manager (FMan). It provides an interface to the QMan for enqueuing and dequeuing new frames to/from the multicore system.

8.2.5.2.6.1.1 Global FMan Driver Software Abstraction

The FMan global driver covers all the logically common FMan functionality, i.e functionality which is not port related. The different hardware modules within the FMan (i.e. BMI, DMA, etc.) are encapsulated within the FMan module. The terms "BMI", "DMA" are used for resources identification such as exceptions, counters and some configuration parameters, but logically, the only module used for functional operations is the FMan.

8.2.5.2.6.2 How to use the Global FMan Driver?

The following sections provide practical information for using the software drivers.

8.2.5.2.6.2.1 Global FMan Driver Scope

This module represents the common parts of the FMan. It includes:

- FMan hardware structures configuration and enablement
- Resource allocation and management
- Interrupt handling
- Statistics support
- ECC support for the FMan RAM's
- Load balancing between ports

8.2.5.2.6.2.2 Global FMan Driver Sequence

- FMan config routine
- [Optional] FMan advance configuration routines
- FMan Init routine
- FMan runtime routines
- FMan free routine

8.2.5.2.6.2.3 Global FMan Driver Functional Description

The following sections describe main driver functionalities and their usage.

8.2.5.2.6.2.3.1 FMan Configuration and Initialization

On FMan driver initialization, the software configures all FMan registers and relevant memory. It supplies default values where no other values are specified, it allocates MURAM, it loads FMan controller code. It defines IRQ's and sets IRQ handles. It enables hardware mechanisms and initializes software data structures for software management.

By the time initialization is done, FMan is ready to be used and any of the FMan sub-modules (FMan-Ports, MACs, etc.) may be initialized.

8.2.5.2.6.2.3.2 Resource Management & Tuning

The FMan provides resources used by its sub-modules. Generally, the driver selects default resource allocation, but when initializing the global FMan module, the user may specify a different allocation for some or all of the resources.

The resources relevant for this discussion are resources used by the BMI only. These resources should be further distributed between the different ports, but the initial allocation is for the BMI in opposed to some internal use of the FMan controller. The main and most important resources of the FMan are TNUMs (i.e. the FMan "tasks"), DMAs, FIFOs and "pipeline-depth".

The total available resources may vary based on SoC. The recommended default values are designed to fit most applications but as the resource allocation depends on system configuration, it therefore may vary between applications. I.e. the default value that are being set by the driver will be sufficient in use-cases were the user utilizing most of the FMan bandwidth and the user application is mostly using the FMan. In other cases such as if user uses some advance PCD settings and/or overloads the SoC (e.g. PCI is being massively used), the resources may need some special treatment and tuning by user as the default may not be sufficient enough.

Most MURAM is used as a temporary location for data transaction. This part's size is referred to as "FIFO size". The rest of the MURAM may be used for other utilizations such as Custom Classifier and its size is effected by the use of these features, i.e. if Custom Classifier is not used, "FIFO size" may be enlarged. The user may call `FM_ConfigTotalFifoSize` in order to modify the default value of the MURAM. However, one should bear in mind that when FIFO size is enlarged - Custom Classifier space is decreased.

8.2.5.2.6.2.3.3 Load Balancing

The FMan provides a mechanism to optimize the internal arbitration of different ports over the shared resources of the hardware.

The driver supports this feature by providing an API for dividing the bandwidth between the different ports (`FM_SetPortsBandwidth`). The API is given in terms of percentage - i.e. for each port, the user should specify its percentage relative to the other ports. This API is optional and may be modified at runtime. If not used, or if all ports get the same bandwidth (whether its {50,50} or (25,25,25,25}), then no one port will have priority over other ports. If ports get different values, for example 3 ports used and get {25,50,25}, than the first and third ports will get the same access to shared resources but the second one will get twice as much. i.e. The numerical values given to each port are not important, but only the relation between the ports.

8.2.5.2.6.2.3.4 Statistics

The FMan API provides access to all the statistics gathered by the FMan hardware. The API routine `FM_GetCounter` may be called at any time after initialization to retrieve any of the FMan counters.

8.2.5.2.7 FMan Parse-Classify-Distribute Driver

The Parse-Classify-Distribute (PCD) driver module refers to the parts of the drivers handling the different PCD engines and services such as Parser, Keygen, Custom Classifier, Policer, Header Manipulation, Reassembly, Fragmentation and Frame Replication. It deals both with the common configuration and runtime features and the specific PCD resources such as Keygen Schemes, Custom Classifier graphs, etc.

8.2.5.2.7.1 FMan PCD Hardware Overview

- Parser-The parser performs protocol header parsing and validation for a wide range of frame formats with varying protocols and encapsulation. A hard-coded parser function is used for the known and stable protocols. The hardware parser capabilities can be expanded by software parser functions to support protocols not supported by the hardware parser including proprietary protocols and shim headers. The parser parses the frame according to a per-port configuration. It reads the frame header from the FMan Memory and writes the frame parse results to the Internal Context of the frame. The Lineup Confirmation Vector is a part of the parser result. It represents a list of all the protocols recognized by the hardware parser, and may be extended to contain information added by the software parser.
- Keygen-The Keygen is located on the FMan receive path, and enables high performance implementation of pre-classification. It holds a SoC dependent number of key generation schemes in internal memory. Each scheme can generate different frame queue ID (FQID), a Storage-Profile ID (SPID) and policer profile (PP). One main function of the Keygen module is to separate network data into different flows, each requiring different processing. Another function of the Keygen, is the Classification Plan. This is a mechanism provided in order to mask LCV bits according to per-port definition. The Classification Plan is implemented as a table of SoC dependent number of entries, logically divided or shared between the FMan Ports.
- Custom Classifier-The Frame Manager (FMan) Custom Classifier module performs a look-up using a specific key from the received frame or internal frame context according to Parser results. The FMan Custom Classifier logically occurs after the Keygen processing has completed and can be operational in both the MAC receive flow and the offline parsing flow. The look-up produces an action descriptor which contains the necessary information for the continuation of the frame processing in the next module or the next look-up table.
- Policer-The Policer supports implementation of differentiated services at line speed on the Frame Manager (FMan) receive or offline parsing paths. It holds a SoC dependent number of traffic profiles in internal memory, each profile implementing RFC-2698 or RFC-4115 or Pass-Through mode. Each mode can work in either color-blind or color aware mode, and pass or drop packets according to their resulting color.

8.2.5.2.7.1.1 FMan PCD Software Abstraction

The FMan PCD driver aims to provide a high-level, abstract, network oriented, logical interface. It is designed to allow a glue logic between the different PCD engines and the PCD "user" - the FMan port, and to define an interface to these features to be used by the application. In this process, new non-hardware modules may be created - such as "Network Environment", while existing hardware modules - such as "Classification Plan" - may be hidden from the user. The following sections makes an attempt to describe the driver design decisions in abstracting the engines' hardware and the gap between the hardware programming model and the drivers API.

8.2.5.2.7.1.1.1 FMan PCD Flow

The FMan opens the FPM scheduling capabilities to the application, which allows significant flexibility in defining the packet flow. At various points in the flow, the FMan user must configure the next engine to handle the packet and the next operation it will perform. The driver minimizes this flexibility by assuming a basic flow for each port. The driver can expand this flow to include all FMan PCD capabilities, but in a limited manner that will be described below.

The basic flow reflects the expected use of the FMan PCD. When a port is initialized, the default setup that received packets are passed to the port's default Rx frame queue, as configured by the user. When the PCD is linked to the port, the user chooses one of the provided PCD support options which selects which PCD engines (parser, Keygen, FMan-Controller, and Policer) are included in the frames. The selected PCD support option adds the selected engine or engines to the flow according to the following PCD organization.

- When parser is used, it is always the first PCD engine working on the received frames.
- If parser is not activated, Keygen, and FMan-Controller may not be activated.

- Keygen's first use follows the parser, but it may be used again following the Fman-Controller or the policer.
- If FMan-Controller is used, it will follow the Keygen. It may not be activated if Keygen is not used.
- Policer may be activated by itself or follow any of the engines.

In all cases, the frame returns to the buffer manager interface (BMI) for enqueueing. The application may not change the main flow at runtime.

The following figure shows the default ports flows (in terms of next invoked action (NIA) registers' initialization):

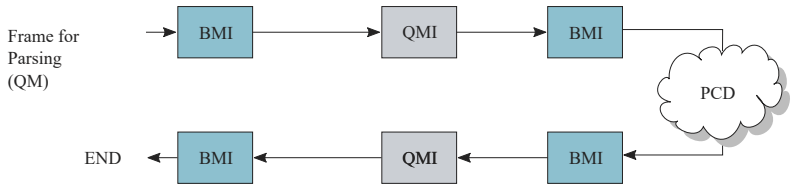

Figure 89. Default Rx Flow

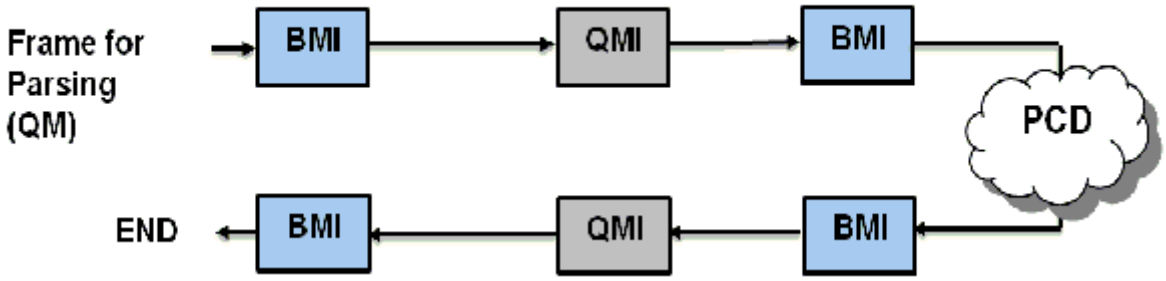

Figure 90. Default Offline Parsing Flow

NOTE

In independent mode, both Tx and Rx BMI NIA are FMan Controller. Other NIAs are not applicable.

After basic initialization, the default Rx flow, as shown in Figure 89, is the configured flow. A PCD flow is initially defined by FMan Port level, although it is effected both by the port configuration and the PCD resources configuration. Following figure shows the PCD flows supported by the driver.

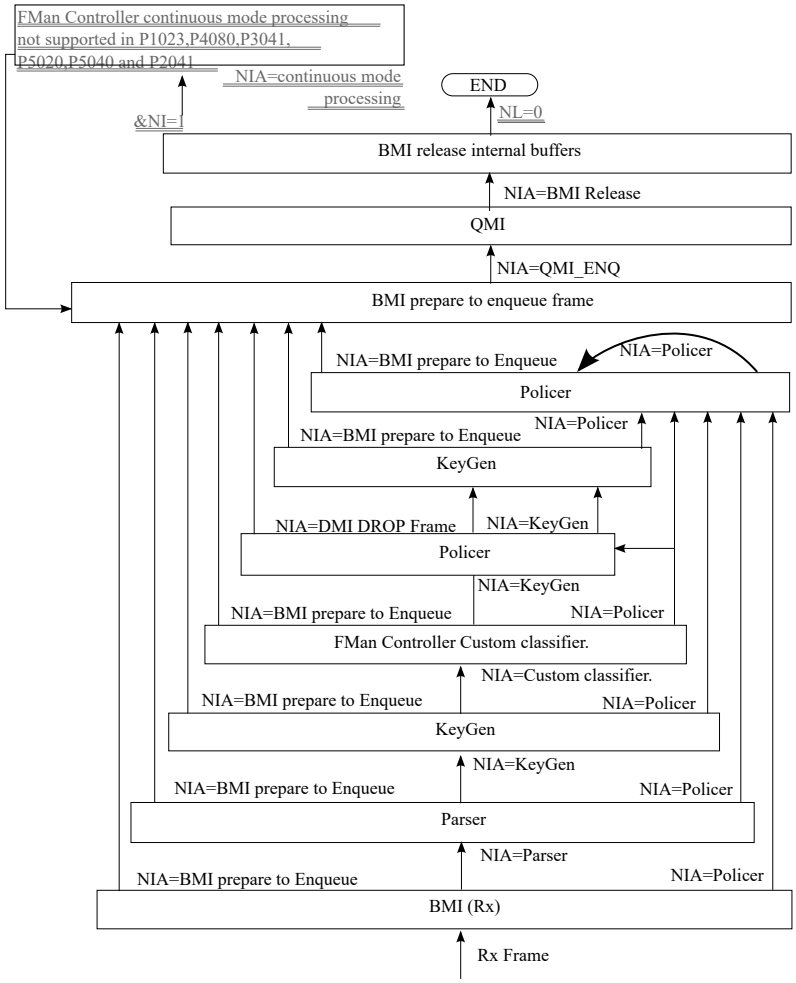

Figure 91. Available flows

8.2.5.2.7.1.1.2 Global FMan PCD Module

The FMan PCD driver deals with the configuration initialization and runtime setting of the PCD resources. The actual use of these resources is in fact activated only when an FMan-Port is enabled and is bound to the initialized PCD resources. In this chapter we will only deal with the initialization and organization of those resources.

The PCD driver is constructed by a global FMan-PCD module that must be initialized first, and a set of optional PCD resources that can be initialized at run-time. The FMan-PCD module is responsible for enabling the different engines, loading SW parser if required, registering PCD interrupts and other general configuration.

8.2.5.2.7.1.1.3 Global FMan-PCD Resources

PCD driver's resources are NOT identical to PCD hardware resources and provide an abstraction layer to the hardware resources. PCD is viewed as a graph of PCD resources where FMan RX & OP Ports may be bound to subsets of the PCD graph. Refer to Port-PCD Binding.

The following are the driver's PCD resources:

- Network Environment Characteristics
- Software Parser
- Keygen Schemes

- Custom Classifier Roots
- Custom Classifier Match-Tables
- Custom Classifier Hahs-Tables
- Custom Classifier Manipulations
- Policer Profiles

The **Network Environment (NetEnv) Characteristics** are a pure SW resource. It is used in creating multiple HW PCD resources. Logically, it represents the NetEnv of a port or a number of port and supplies the glue between the parser, the Keygen, the Custom Classifier and the port. It ensures they all "speak the same language". Physically, it defines the LCV for all the participating protocols for each FMan Port.

Keygen Schemes and **Policer Profiles** are closely bound to their hardware programming model

Custom Classifier process is represented by a software graph. Each node in the graph represents a logical action. The driver defines different types of Custom Classifier nodes. One type of node is one of an Exact-Match which is a software representation of an Action-Descriptor (AD) that performs a lookup according to the key defined. Another type of node is one of Indexed-Lookup which is again a software representation of an Action-Descriptor of that type. A higher level of abstraction is performed on Hash-Table nodes, where the driver manages a hash table. Each node, may also contain a handle to a Manipulation action - which is the software abstraction for one or more AD's used for manipulating the frame by inserting and/or removing data. Generally, any Custom Classifier software node may be translated to one or more HW action descriptors.

The driver defines a notion of a Custom Classifier graph. The CC graph is the total set of lookups and manipulations performed by the Custom Classifier. The user builds the graph only after defining the CC Nodes. The finalization of the graph is done by building the root nodes and defining their grouping. This refers to the 16 entries array that functions as the entry point of the CC. Generally, the indexing into this array is performed by using 4 bits out of the LCV. This driver supports a division of this array into 2-16 unrelated groups to increase the flexibility of the programming and allow usage of more LCV bits.

8.2.5.2.7.1.1.4 How to Associate PCD Resources

The NetEnv is the link between the port and all the PCD resources it is using.

- Parser-The driver configures the LCV (lineup confirmation vector) in the parser configuration for every FMan Port according to the specific NetEnv it is bound to. When using SW parser, a private shim header should be added as a NetEnv unit, and may be used later as a regular unit.
- Keygen-Classification plan: The driver hides this resource from the user and configures classification plan entries to support and expand the HW parser capabilities according to the user definition of its NetEnv Characteristics
- Keygen-Schemes: The user describes the scheme in terms of NetEnv units, and the match vector is configured by the driver.
- Custom Classifier: The user describes the entry point of a CC root in terms of NetEnv units. The driver internally passes this information to the Keygen that uses it in selecting the entry point in the CC root when passing a frame from the Keygen to the Custom Classifier.

After defining PCD resources, the user may bind any FM Port to the initialized resources. A port must be bound to a single NetEnv, and may be bound to a Custom Classifier root and KeyGen schemes.

The set of figures below demonstrate a single example of the use of the driver's resources and their interaction with the hardware structures.

The following table demonstrates a NetEnv of 7 units. Unit 0, for example, is a simple unit recognizing ethernet frame, while unit 2 recognizes IP frames of either version.

Unit 0	Unit 1	Unit 2	Unit 3	Unit 4	Unit 5	Unit 6

Table continues on the next page...

Table continued from the previous page...

Ethernet	Ethernet [Broadcast]	IPv4	IPv4	UDP	MPLS [stacked]	IPv4 [Multicast]
		IPv6		TCP		

When a port is bound to a NetEnv, the driver translates its units into the parser's hardware Line-up Confirmation Vector (LCV). The table below shows the LCV configured for a port that has the NetEnv above.

	LCV[0]	LCV[1]	LCV[2]	LCV[3]	LCV[4]	LCV[5]	LCV[6]	LCV[7-31]
Ethernet	1	1	0	0	0	0	0	0...0
IPv4	0	0	1	1	0	0	1	0...0
IPv6	0	0	1	0	0	0	0	0...0
UDP	0	0	0	0	1	0	0	0...0
TCP	0	0	0	0	1	0	0	0...0
MPLS	0	0	0	0	0	1	0	0...0

Based on the NetEnv, the driver also defines a set of Classification Plan entries to be used by each port using that NetEnv.

	Bit[0]	Bit[1]	Bit[2]	Bit[3]	Bit[4]	Bit[5]	Bit[6]	Bits[7-31]	Comments
0	1	0	1	1	1	0	0	1...1	No classification plan
1	1	1	1	1	1	0	0	1...1	Ethernet Broadcast
2	1	0	1	1	1	1	0	1...1	MPLS Stacked
3	1	1	1	1	1	1	0	1...1	1+2
4	1	0	1	1	1	0	1	1...1	IPv4 MC
5	1	1	1	1	1	0	1	1...1	1+4
6	1	0	1	1	1	1	1	1...1	2+4
7	1	1	1	1	1	1	1	1...1	1+2+4

When a frame is received its LCV is masked by one of the vectors in the Classification Plan. The FMan selects the entry based on the parser output and the port parameters.

To support this operation, the driver initializes the HXS plan offset field for each relevant header in the port parser parameters. The table below, is the driver's translation of the Network environment above into the port classification plan parameters. When a frame is being parsed, the classification plan offset for each header found is accumulated to construct the offset of the result classification plan. For example, a hypothetic frame of Ethernet BC/Stacked MPLS/IPv4 unicast frame, will have an LCV=0xF6000000 and a classification plan id of 2^(1-1)+ 2^(2-1) = 3, so its classification plan vector is 0xFDFFFFFF, and QLCV = 0xF4000000.

Ethernet Broadcast	1	2^(1-1)=1
MPLS Stacked	2	2^(2-1)=2
IPv6	0	0
UDP	-	-
TCP	-	-
IPv4 Multicast	3	2^(3-1)=4

Given the driver's automatic initialization of the LCV and classification plan based on only the NetEnv, the user may now initialize Keygen schemes by passing as match criteria only the NetEnv unit id's. As in the other cases, the driver will translate the unit id's to the schemes' match vectors as can be seen in the figure below.

Id	Scheme Match Criteria	Units	Match vector
0	Ethernet broadcast	1	0x40000000
1	IPV4 MC+MPLS stacked	5+6	0x06000000
2	IPV4 MC	6	0x02000000
3	IPV4+(TCP or UDP)	3+4	0x18000000
4	match on IPv4 or IPv6 frames	2	0x20000000
5	Ethernet	0	0x80000000
6	Direct scheme	--	0xffffffff

Figure 92. Keygen schemes example

Finally, the driver will also take care of initializing the Keygen-to-Custom Classifier configuration registers. When initializing a Custom Classifier root, the user may create groups based on NetEnv units (in opposed to a simple group of a single entry; for more information refer to Custom Classifier Root).

When initializing a scheme, the user should only pass the handle to the Custom Classifier root. The driver will translate the group LCV dependent parameters into the scheme required register.

For example, Group 0 is a simple group that is not dependent on the NetEnv. Group 1 is based on a single unit - so a frame may be forwarded to 1 of 2 root nodes, and group 2 is based on 3 units - so a frame may be forwarded to 1 of 8 root nodes.

	CC Tree group Num of units	units	Keygen FMKG_SE_CCBS	Possible offsets within group depending on PR[LCV] AND FMKG_SE_CCBS
Group 0	0	--	0x00000000	0
Group 1	1	3	0x10000000 (Scheme 4 in the example)	0,1
Group 2	3	1,3,4	0x58000000	0-7

Figure 93. Keygen scheme configuration for CC next engine

The Policer Profiles are the one resource that does not rely on the Parser Results or the NetEnv. It is therefore managed independent of the other PCD resources.

8.2.5.2.7.1.1.5 FMan Header Manipulation

The FMan controller defines a set of header manipulation commands, and supports listing of these commands. The FMan driver allows limited listing by a single Manipulation node, limited to a single use of each command and to a defined order (e.g. remove + insert may be defined in a single node, but insert + remove or remove + remove may not). Alternatively, full listing and ordering is supported by chaining more than one Manipulation nodes. In such a case, the driver will unify HMCT's to optimize performance and MURAM usage unless parsing is required in between the different commands.

The following list maps each FMan controller command to the driver parameters in the Header Manipulation structure:

1. Generic removal-Set 'rmv' and use the corresponding parameters structure. Select generic enum and parameters.
2. Generic insertion-Set 'insrt' and use the corresponding parameters structure. Select generic enum and parameters.
3. Generic replace-Set 'insrt' and use the corresponding parameters structure. Select generic enum and parameters and set 'replace'.
4. Protocol specific removal-Set 'rmv' and use the corresponding parameters structure. Select byHdr enum and parameters.
5. Protocol specific insert-Set 'insrt' and use the corresponding parameters structure. Select byHdr enum and parameters.
6. Vlan priority update-Set 'fieldUpdate' and use the corresponding parameters structure. Select vlan enum and parameters.
7. IPv4 update-Set 'fieldUpdate' and use the corresponding parameters structure. Select IPv4 enum and parameters.
8. IPv6 update-Set 'fieldUpdate' and use the corresponding parameters structure. Select IPv6 enum and parameters.
9. TCP/UDP update-Set 'fieldUpdate' and use the corresponding parameters structure. Select TCP/UDP enum and parameters.
10. TCP/UDP checksum calculation-Set 'fieldUpdate' and use the corresponding parameters structure. Select TCP/UDP enum and parameters.
11. IP replace-Set 'custom' and use the corresponding parameters structure. Select TCP/UDP enum and parameters.

8.2.5.2.7.1.1.6 Custom Classifier Hash-Table Node

The driver provides a high level Hash-Table mechanism implemented over the FMan controller Custom Classifier structures. The driver implements the Hash-Table by using a Match-Table node of type Indexed-Hash, where each entry points to a hash bucket implemented by a Match-Table node of type Exact-Match (For more information on these nodes, refer to Custom Classifier Root). The driver uses the Keygen key and hash result as a key for the lookup. A selected part of the hash result is used to select the entry in the Indexed-Hash table (i.e. the bucket), and the full key possible values are used as the Match-Table keys in the selected bucket.

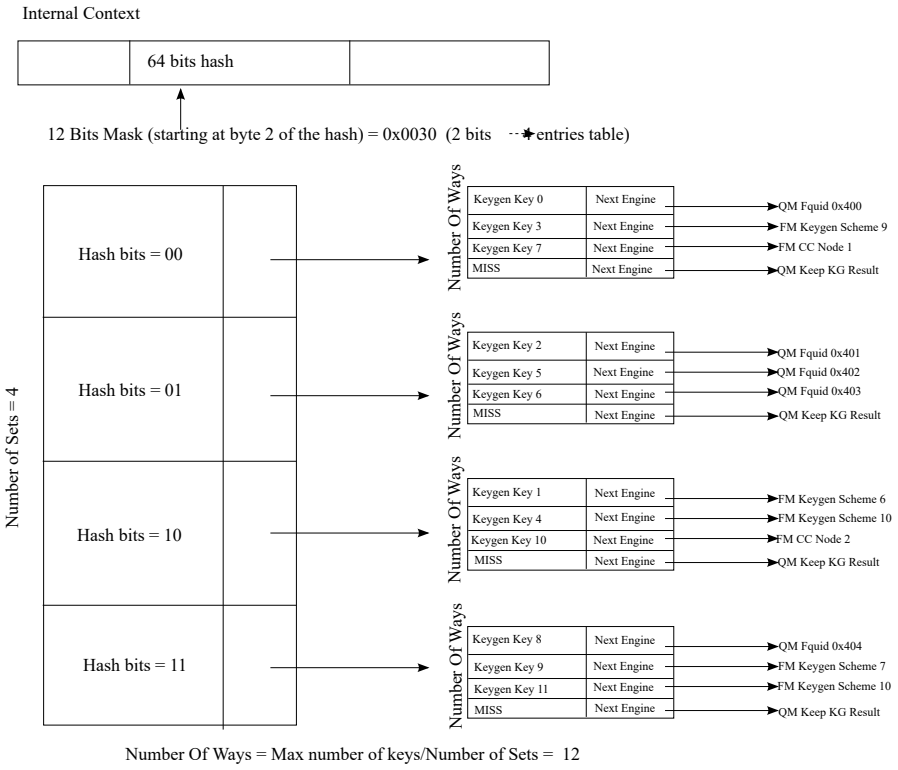

Figure 94. Hash_Table node example

8.2.5.2.7.2 How to use the FMan PCD Driver?

The following sections provide practical information for using the software drivers.

8.2.5.2.7.2.1 FMan PCD Driver Scope

- FMan Parser, Keygen, Custom Classifier & Policer configuration and initialization
- PCD Enable/Disable
- Resources allocation and management
- Interrupt handling
- Statistics support
- Support for FMan PCD operations

8.2.5.2.7.2.2 FMan PCD Driver Sequence

- FMan PCD Config routine
- [Optional] FMan PCD advance configuration routines
- FMan PCD Init routine
- Specific one-time pre-enable routines (e.g. load SW parser)
- FMan PCD Enable routine
- FMan PCD runtime routines
- FMan PCD specific resources runtime routines (for defining, modifying and deleting Keygen schemes, Custom Classifier nodes, etc.)

- FMan PCD Free routine

8.2.5.2.7.2.3 FMan PCD Driver Functional Description

The following sections describe main driver functionalities and their usage.

8.2.5.2.7.2.3.1 Global PCD Initialization

PCD initialization is divided into two parts. During the first part of the initialization, `FM_PCD_Config`, advance config routines, and `FM_PCD_Init` are called to configure and set all basic PCD capabilities, including pre-defining which engines are supported and may be used later. This stage is done in the kernel, and PCD is not yet enabled. During the second part of the initialization, PCD is enabled by a runtime routine (`FM_PCD_Enable`).

This division creates a gap during which some functionality may be added. The most important is the loading of the SW parser code. Note that this functionality is allowed only when PCD is disabled (i.e. between init and enable) or, with some restriction, in runtime after disable.

Once PCD basic initialization is complete (`FM_PCD_Init` and `FM_PCD_Enable` are called and returned), the PCD capabilities of the frame manager are reflected by the driver as a set of API runtime routines designed to define the PCD environment for a specific partition. PCD resources are defined per partition and may be used by all ports within a specific partition. The different PCD resources are first initialized and only later may be used by the FMan ports.

The order of PCD resources initialization is strict and relies on the PCD graph being initialized bottom up, which means that no resource may be initialized before its next engine is initialized. However, the use of port relative profiles is an exception to this rule. A scheme's next engine may be a port relative profile. In such a case, the scheme is initialized but not yet bound to a port, i.e. the actual policer profile is not yet specified. Therefore, its validity may not be verified. It is the user's responsibility to ensure that when a port using that scheme is activated (for using the PCD), its relative policer profile must be validated.

The PCD graph is partition based i.e. may be shared by ports on the same partition. Refer to Port-PCD Binding for more details on port-PCD binding.

8.2.5.2.7.2.3.2 PCD Resources

The following subsections describe each of the driver's PCD resources in detail. In a single-partition environment, most resources are available and do not need explicit allocation. The port policer profiles are an exception. They must be allocated by the user, using the FMan Port API. In multipartition, some of the resources, specifically resources limited by hardware, must be first allocated by a partition and only then used by the partition's ports. The following sections specify the requirements for each of the PCD resources:

8.2.5.2.7.2.3.3 Network Environment Characteristics

The Network Environment (NetEnv) is a software entity that lists the network protocols used by the FM-PCD for classification and distribution. The total number of NetEnvs defined depends on the system configuration. A NetEnv may be defined per port or shared among some or all ports. The definition of a NetEnv must be done with care while considering the use of the FM-PCD module. The NetEnv is, in fact, the key for frames parsing, distribution, and classification.

The NetEnv is a list of distinction units. Each distinction unit consists of at least one or more headers. A header may either be one header from the list of supported headers or one of the supported headers plus an option (For more details on list and options available, refer to Supported Network Protocols).

The hardware parser implements header recognition. If the software parser is used, a distinction unit may also be one of the shim headers. The driver saves a number of units (that may be redefined in `fm_pcd_ext.h`) for private use. The user may than use this unit ID to recognize the private header by the Keygen or CC.

The following figure shows an example of a NetEnv. It has four units, two of which consist of a single header. One of the headers has an option. The final two units consist of two interchangeable headers. This example will be used throughout the following sections

.

Ethernet [Broadcast]	IPv4	IPv4	TCP	
	IPv6		UDP	

Figure 95. Network Environment Example

The distinction units list should reflect what the user wants to do with the PCD mechanisms to parse-classify-distribute incoming frames. Specifying a distinction unit means that the user wants to use that specification to either activate the parser on the specified headers or distinguish between frames with the Keygen or the Custom Classifier. Using interchangeable headers to define a unit means that the user is indifferent to which of the interchangeable headers is present in the frame, but instead wants the distinction to be based on the presence of either one of them. For example, if it is required that a selection of scheme is based on having L3 header of either IPv4 OR IPv6, but it is of no importance which of the two is present, than a unit should be defined with 2 interchangeable headers: IPv4, IPv6.

The initialization routine retunes a NetEnv handle to be used later to specify that Network Environment.

Depending on context, there are limitations to the use of NetEnvs. A port using the PCD functionality is bound to a NetEnv. Some, or even all, ports may share a NetEnv, but it is also possible to have one NetEnv per port. When initializing a scheme, a Custom Classifier root, or when binding a port to the PCD, one of the required parameters is the handle of an initialized NetEnv. The driver uses the definitions of that NetEnv to initialize that scheme or Custom Classifier root. When a port is bound to a Keygen scheme or a Custom Classifier root, it must be bound to the same NetEnv.

For the flow's definition, the different PCD modules may only rely on distinction units as defined by their environment. When initializing a scheme for example, a PCD module may not choose to select IPv4 as a match for recognizing flows unless IPv4 was defined in the relating environment. In fact, to guide the user through the configuration of the PCD, each module's characterization in terms of flows is not done using protocol names, but rather environment indices.

In terms of hardware implementation, the list of distinction units sets the Lineup Confirmation Vectors (LCVs) and are later used for match vector and CC indexing. The shim header LCVs are conventionally assigned from LSB up, so the first shim header is 0x0000_0001. For more details on the implementation, refer to Global FMan-PCD Resources.

Runtime Modifications: A Network Environment may not be changed at runtime. New NetEnvs may be set, and unused NetEnvs may be deleted anytime.

Available API:

- `FM_PCD_NetEnvCharacteristicsSet`
- `FM_PCD_NetEnvCharacteristicsDelete`

8.2.5.2.7.2.3.4 Software Parser

The PCD allows the extension of the hardware parser by loading the software parser code for further manipulation. When this is required, the user passes the image of the software parser code and a table of labels to the driver. This represents the entry-points in the software parser code. If more than one code piece is required for a specific protocol (for example, to be used by different ports) an index is added to the labels table. Later, when configuring a port that uses one or more software parsing attachments, each protocol header may be bound to one of the previously declared labels. This is done by setting the software parser enable indication for one or more protocols headers, and indicating the software parser index (relative to that protocol header). The software parser code will run for that port after the hardware parser recognizes that header. In other words, the specified protocol header is in fact the trigger for the software parser to be activated. It is typical for the software parser to parse a private header that was previously defined as a NetEnv unit and then mark its existence for classification and distribution.

The software parser loading routine must be called only when the PCD is disabled and no ports in the system are using the parser. On initialization this means that the routine, if needed, must be called after `FM_PCD_Init` and before `FM_PCD_Enable`.

Runtime Modifications: Software parser may not be changed at runtime.

Available API:

- `FM_PCD_PrsLoadSw`

8.2.5.2.7.2.3.5 Keygen Schemes

The scheme entity relies on the hardware entity. There are 32 Keygen schemes in a frame manager. When a PCD is defined in a single partition environment, it is the owner of all 32 schemes. When a PCD is defined in a multipartition environment, the user must specify how many schemes are required for this partition. Once schemes are allocated for a specific partition, it may be used only by ports on that partition.

Within a partition, the schemes order is relevant. When initializing a scheme, the user must specify the following:

- Relative index, relative to the partition's schemes.
- Network environment handle.
- Match criteria, or which frames should be processed by the scheme.
- Keygen action (such as hash, FQID mask, and manipulation).
- Distribution FQIDs.

The match criteria (if used), is based on the NetEnv characteristics units. Schemes that are to be used directly should be configured as such, by specifying a scheme ID rather than using match criteria or specifying distinction units. Upon initialization, the driver returns a handle to the initialized scheme. This handle can be used later to specify the scheme.

Keygen schemes are dependant on parser results. They may be used immediately after the parser by direct mode or by using the match criteria. Schemes may also be used after the Custom Classifier or the policer. This flow is typically used for flow control redistribution. In this case, to avoid infinite loops the scheme is reached only in direct manner and not by match criteria.

The keygen action consists of the construction of the key and the definition of the distribution. The key is constructed by a set of extract actions arranged in the driver as an array of extractions. Extractions may be done from data, from Parse Result, from default values, but most commonly - from the header. When extraction is taken from the header it may be described generically by size and offset, or it may be an extraction of the full field. For a full list of supported headers and fields, see Supported Network Protocols.

When a scheme is initialized, the user must specify the next engine to which the frame should pass after it is processed. The next specified engine must be initialized and valid at this point. Frames may pass to the Custom Classifier or the policer, or they may be directly enqueued to an FQID.

Once schemes are defined, ports may be bound to them. A port may be bound to as many schemes as needed, as long as they are from the same partition and the same NetEnv.

Following figure shows an example of scheme setting and connection to the NetEnv, as shown in Network Environment Characteristics .

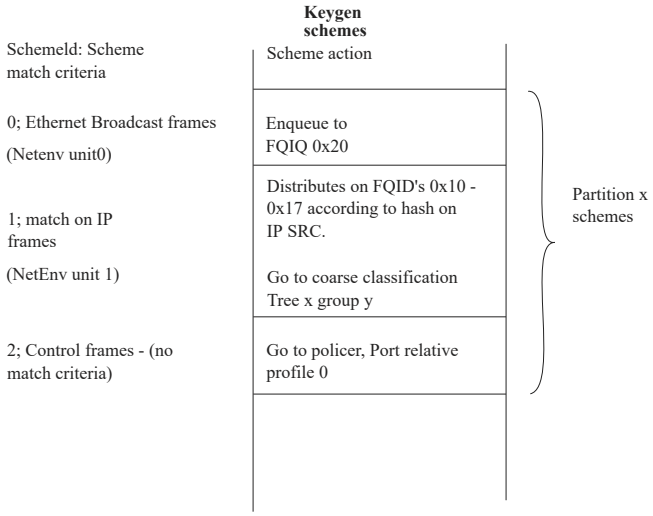

Figure 96. Schemes Example

Runtime Modifications: Valid schemes may be modified at runtime by calling the scheme initialization routine for an existing scheme with the following differences:

1. Passing the scheme handle as retuned by the original initialization routine (instead of the scheme's relative ID).
2. Setting 'modify' to be 'TRUE'.

New schemes may be set and unused schemes may be deleted anytime.

Available API:

- `FM_PCD_KgSchemeSet`
- `FM_PCD_KgSchemeDelete`

8.2.5.2.7.2.3.6 Custom Classifier Root

A Custom Classifier root (or actually the entire CC graph) may be defined per FMan Port or shared by ports on the same partition. It is a set of lookups defined to classify, route and perform manipulation on a flow of frames. The CC graph is built bottom up by connecting CC Nodes. When a node (which is not a leaf in the graph) is set, it points to other nodes. These other nodes must already be initialized.

A CC root is defined by a set of entries that construct the root of the graph, and Custom Classifier Nodes of different types.

Once all nodes in the graph are ready and connected, the root is built by calling the `FM_PCD_CcRootBuild` routine. The root of the graph is in fact an array of up to 16 root entry nodes. The entry point for a frame is one of the CC root entries, depending on the engine that precedes the CC which is the Keygen.

According to the parser results (which is defined by the NetEnv setting) and Keygen configuration, a frame is directed to one of the entries in the CC root array.

When building the CC root, the user must specify its NetEnv id. Up to four distinction units may define the selection of one node (out of the 16), in a simple bit selection method. The following table shows the CC Root nodes selection (0 = unrecognized by parser, 1 = recognized by parser).

Table 76. CC Root Nodes Selection

Unit0	Unit1	Unit2	Unit3	Selected Node
0	0	0	0	0
0	0	0	1	1
0	0	1	0	2
0	0	1	1	3
0	1	0	0	4
0	1	0	1	5
0	1	1	0	6
0	1	1	1	7
1	0	0	0	8
1	0	0	1	9
1	0	1	0	10
1	0	1	1	11
1	1	0	0	12
1	1	0	1	13
1	1	1	0	14

To allow more than 4 units to be involved in the selection, the 16 entries may be divided into groups. The table above demonstrates an organization of one group of 16 nodes, but other organizations are possible:

2 groups of 8 -> each group selected by 3 units (to select nodes 0-7 relative to this group's base)

4 groups of 4 -> each group selected by 2 units (to select nodes 0-3 relative to this group's base)

8 groups of 2 -> each group selected by 1 units (to select nodes 0-1 relative to this group's base)

16 groups of 1 -> indifferent to units (single node group always selected)

2-8 groups of varied sizes (8-1)

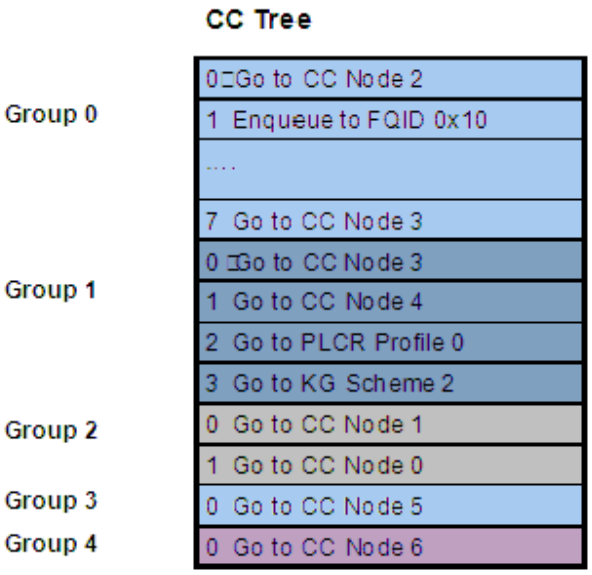

Figure 97. CC Root - 5 groups example

When building the CC Root, the user must specify the number and size of groups. Then, for each group, an array of per-root-node parameters is passed. The array is ordered according to the table above.

A simplified way of using the CC, is to define up to 16 different groups of one root-node each. In this way, all traffic from a specific Keygen scheme is going to the same group, which is a single node, and no NetEnv unit are selected. Groups 3 and 4 in figure above are an example of a single root group.

The following figure shows a combined use of the NetEnv units in Keygen and Custom Classifier, based on the previous NetEnv and Keygen scheme examples.

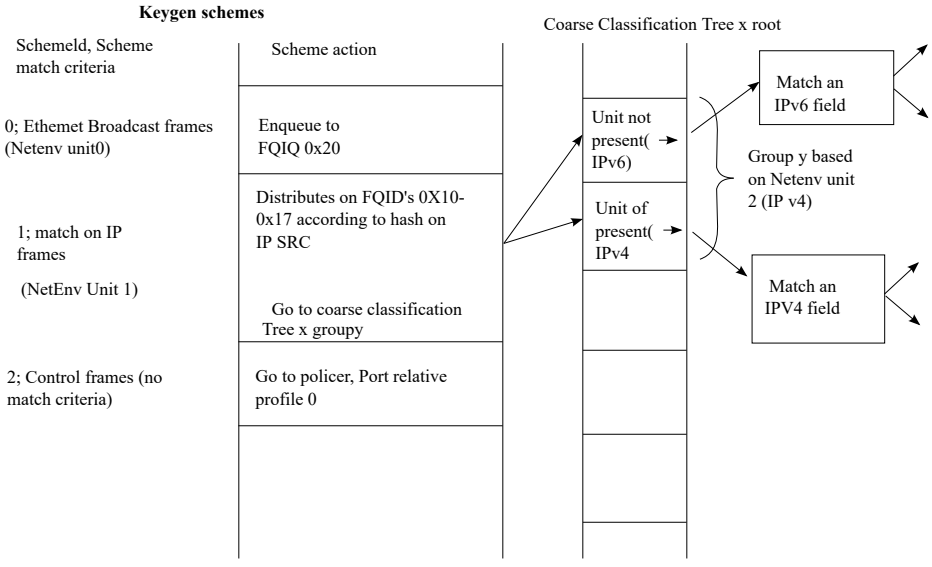

Figure 98. Keygen -> Custom Classifier Example

When a CC root or node is initialized, the driver returns a handle to the root or node respectively. This handle may be used later for specifying the root or node. For example, to build a root, the nodes are specified by passing their handles, and a root handle must

be passed when defining a port that uses the Custom Classifier. A port may be bound only to one root, from the same partition and NetEnv as the port.

Runtime Modifications: Custom Classifier nodes may be modified by using one of the routines listed in the "Available API" below.

Custom Classifier Roots may not be changed at runtime. New nodes and roots may be defined and unused ones may be deleted anytime.

Available API:

- `FM_PCD_MatchTableSet`
- `FM_PCD_MatchTableDelete`
- `FM_PCD_HashTableSet`
- `FM_PCD_HashTableDelete`
- `FM_PCD_CcRootBuild`
- `FM_PCD_CcRootDelete`

Specific runtime API:

- `FM_PCD_CcRootModifyNextEngine`
- `FM_PCD_MatchTableModifyNextEngine`
- `FM_PCD_MatchTableModifyMissNextEngine`
- `FM_PCD_MatchTableRemoveKey`
- `FM_PCD_MatchTableAddKey`
- `FM_PCD_MatchTableModifyKey`
- `FM_PCD_MatchTableModifyKeyAndNextEngine`
- `FM_PCD_MatchTableFindNModifyNextEngine`
- `FM_PCD_MatchTableFindNRemoveKey`
- `FM_PCD_MatchTableFindNModifyKeyAndNextEngine`
- `FM_PCD_MatchTableFindNModifyKey`
- `FM_PCD_HashTableAddKey`
- `FM_PCD_HashTableRemoveKey`
- `FM_PCD_HashTableModifyNextEngine`
- `FM_PCD_HashTableModifyMissNextEngine`

8.2.5.2.7.2.3.7 Match-Table Nodes

The driver defines two types of Match-Table nodes - Exact-Match nodes and Indexed-Lookup nodes. On both types of nodes a table of entries is defined where each entry leads to a selected next-engine with a selected action. The next-engines may be another CC Node, a Keygen scheme, a Policer profile or an enqueue action to a QM queue. In the last case, the queue may be either an Fqid (frame queue id) that was previously defined - typically by the Keygen, or an explicitly specified new Fqid that overrides any previous Fqid selection.

The difference between the two types of nodes is in the way an entry is selected in the node's table.

On an exact-match node, the user defines an extraction of data taken from the frame or the Internal-Context. The table of entries represent different possible values (keys) for this extraction, so that for each key a next-action is selected. An extra 'MISS' entry is also specified.

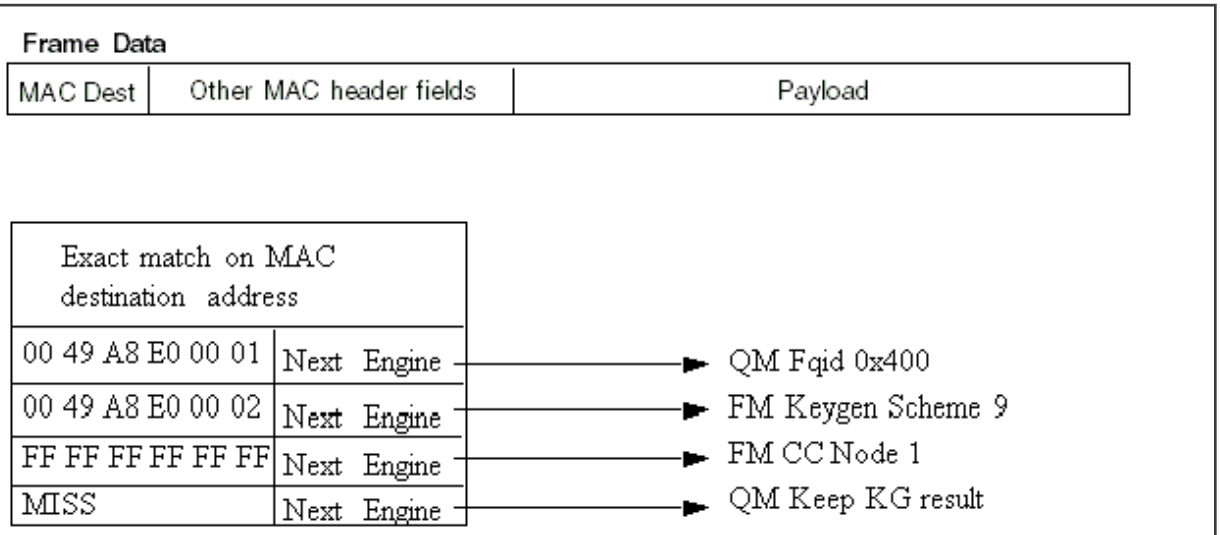

Figure 99. Exact-Match Node Example

On an Indexed-lookup node, up to 2^12 may be defined. The user selects 12 bits out of the Internal Context as an index to an entry in the table. The 12 bits may be masked to select less bits and a smaller table.

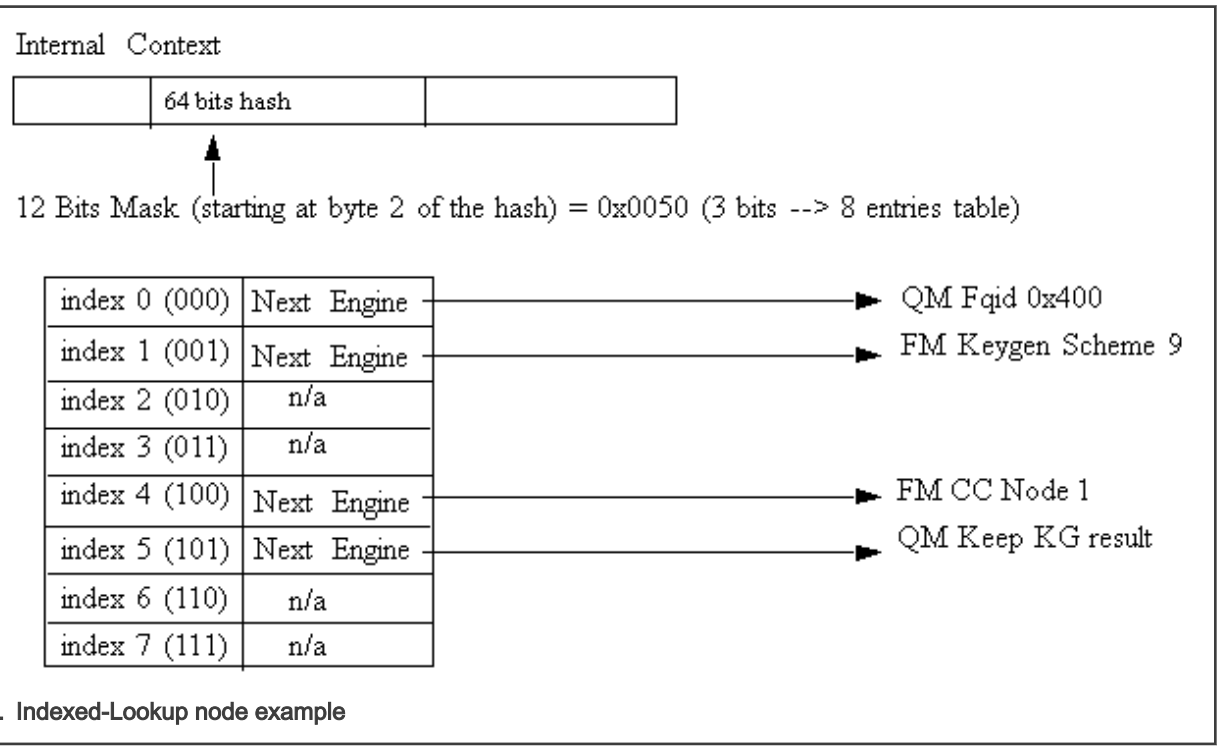

Figure 100. Indexed-Lookup node example

Two methods for CC node allocation are available: dynamic and static. Static mode was created in order to prevent runtime alloc/free of FMan memory (MURAM), which may cause fragmentation; in this mode, the driver automatically allocates the memory according to maximal number of keys, as received from the user. The driver calculates the maximal memory size that may be used for this CC node, taking into consideration whether key masks are required and node's statistics mode.

In dynamic mode, maximal number of keys is not provided (equals zero). At initialization, all required structures are allocated according to current number of keys. During runtime modification, these structures are re-allocated according to the updated number of keys.

8.2.5.2.7.2.3.8 Hash-Table Nodes

The Hash-Table node is a driver managed Hash table. It is defined as a next engine and may follow other CC nodes. The Hash-Table module uses driver lower level CC structures and provides an abstraction layer API consisting of AddKey/RemoveKey routines. By using this module, the user may easily use a hash table based on Keygen key extraction and hash calculation. When initializing this node, the user should define parameters regarding the basic key used for hashing and the structure and size of the hash table (sets/ways).

8.2.5.2.7.2.3.9 Manipulations

On the structural aspect, Manipulation nodes are not graph nodes in the way that they do not effect the flow of a frame, and they are not in fact a graph junctions. Manipulations nodes are defined as extensions to existing CC nodes of all types. Any key on any CC node may have a manipulation characterization on top of the next engine definition. This is realized by CC node parameter `h_Manip` which is a handle to a previously initialized Manipulation node (according to the bottom-up principle). The Manipulation node itself does not have a next engine definition and the frame's flow is determined by the last CC node.

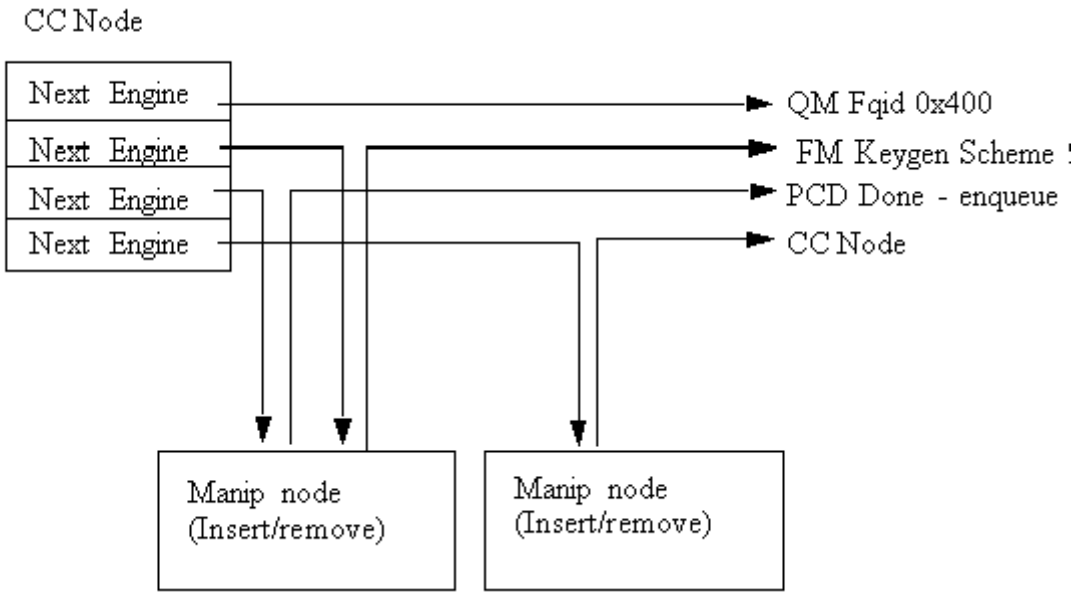

Figure 101. CC Node With Manipulation

Available API:

- `FM_PCD_ManipNodeSet`
- `FM_PCD_ManipNodeDelete`

Specific runtime API:

- `FM_PCD_ManipNodeReplace` (only available for Header-manipulation)
- `FM_PCD_ManipGetStatistics`

NOTE

- For all manipulation types below, the user must call 'FM_PCD_SetAdvancedOffloadSupport' before calling '`FM_PCD_Enable`'.
- For each RX/OP-Ports that will work with the above FM-PCD, the user should have at least 16 tnums (num of tasks). in order to set the tnums the user should call '`FM_PORT_ConfigNumOfTasks`'.
- It is also required to set the DMA transactions to be per port by calling '`FM_ConfigDmaAidOverride`' with 'FALSE' and calling '`FM_ConfigDmaAidMode`' with '`e_FM_DMA_AID_OUT_PORT_ID`'

8.2.5.2.7.2.3.9.1 Header Manipulation

The header manipulation is implemented by the FMan controller block, and is designed to change the incoming frame header for termination or interworking flow requirements. Header modification can be configured on a per-flow basis or for a user-determined group of flows.

The firmware defines some header manipulation structures which hold parameters for the definition of header manipulation action. It defines a basic table descriptor (Header Manipulation Table Descriptor HMTD) and a table of commands (HMCT), allowing a sequence of manipulations to be performed. The commands table may reside in either internal or external memory. The manipulation may be performed at any stage of the Custom Classifier process. As the manipulation changes the frame, the process allows an additional parsing of the processed frame once the manipulation process had ended.

The Header Manipulation (HM) mechanism is viewed by the driver as an extension to other Custom Classifier Nodes. It may take place at the beginning, the middle or the end of a CC graph, but it may not have an effect on the flow, i.e. the selection of the next action.

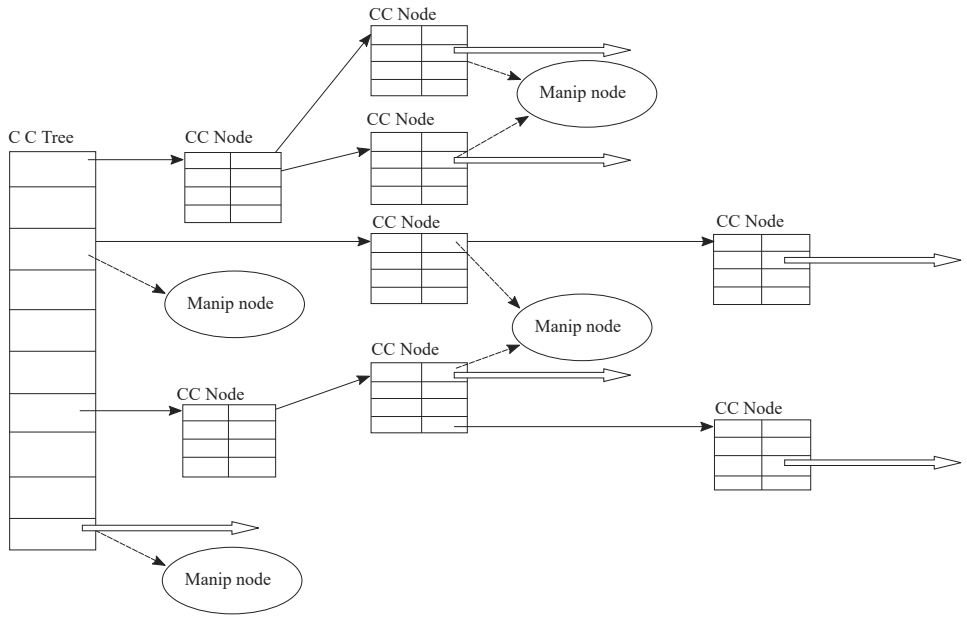

Figure 102. Header Manipulation CC Perspective

The HM action is represented by the driver's Manip node which is a driver sub-module (i.e. initialized by the user, its initialization routine returns an HM handle).

A Header Manipulation node is an independent unit that has no external information regarding other modules in the PCD graph, its users, its location in the flow, or the next engine it will be followed by.

A CC key or a CC root node may lead to a Header Manipulation node. The CC key/root node will define the next engine that should follow the manipulation. The next engine may be Keygen, Policer, another CC node, or PCD termination (enqueue).

In order to use the HM, the user should first create a Manip node, and than use its handle when defining the CC Node that points to this manipulation action.

A Header Manipulation action may be defined as one of the following manipulations:

- Remove
- Insert
- Fields Update
- Custom

More than one manipulation is allowed only if they are to be performed in the order above and only one manipulation of each type.

Other orders or a list of manipulations of the same type may be achieved by chaining some manipulation nodes by using the `h_NextManip` handle of the Manipulation parameters structure.

HM nodes may be shared, so that the same HM handle can be passed to more than one CC key.

By default, each frame goes back to the parser to be re-parsed after the manipulation. However this behavior may be disabled and may have an effect on performance as will be explained in the restrictions note below. It is controlled by the Header Manipulation node parameters.

The parsing option applies to whatever the user initialize as a Manip node - i.e. if the node contains a number of commands, the parsing can be done after all the commands and not between them. However, if the set of commands is initialized as a number of nodes that are chained together, the parser may be run after each node.

The driver aims to optimize performance and MURAM utilization. It does so by internally creating a single command table for chained nodes. Note that this optimization is NOT possible if parsing is required between manipulations and in this case the manip nodes are cascaded.

Note that when manipulations are chained, some restrictions apply:

1. Sharing of chained nodes is only possible on the head of the manipulation and not on inner nodes, i.e. all the manipulation is shared and not parts of it.
2. When parsing is required between manip nodes, the optimization described above is NOT possible and in this case the manip nodes are cascaded.
3. When parsing is required between manip nodes, the next engine of the last CC node may NOT be another CC node; i.e. chained nodes with parsing between them may only exist at the end (and not in the middle) of the CC graph.

8.2.5.2.7.2.3.9.2 IP Reassembly

The FM supports IP reassembly for both IPv4 and IPv6. The FMan accumulates IP fragments until enough have arrived to completely reconstitute the original datagram. IP Reassembly supports a maximum of 16 fragments per frame. Each fragment must reside in a single buffer (not in a Scatter/Gather frame).

The IP Reassembly driver utilizes the FMan Controller and FMan PCD resources in order to provide a full IP Reassembly solution.

The driver's interface is not identical to the hardware resources and provide an abstraction layer to the hardware resources. All IP Reassembly hardware data structures used for IP reassembly manipulation are represented by the software Custom Classifier Manipulation node. On top of the CC Manipulation, the driver internally defines the other resources needed for the full flow.

IP Reassembly flow

Fragments arriving on an Rx (or offline parsing) FMan Port that was configured to support IP Reassembly are recognized and marked by the software parser extension. These frames are steered to direct schemes the Keygen and caught by dedicated schemes that pass them to the Custom Classifier. The CC Root object is configured so that the IP fragments will reach a dedicated root entry node that contains a CC manipulation node. At this point, the IP Reassembly is performed. When a full frame is gathered, it is passed by the FMan controller back to the parser as a full reassembled frame. It is then passed to the Keygen and may be distributed and classified as any other frame.

What should the user do?

The following sequence describes the steps the user must take in order for the flow above to work.

- Initialize general DPAA (BM, BM Portal, BM Pools, QM, QM Portal, FMan and FMan PCD)
- Initialize the Rx/Offline FMan Port on which reassembly should run
- Define PCD as follows:
  - Set a Network Environment with one of the following options:
    - `HEADER_TYPE_IPV4` unit with `IPV4_FRAG_1` option for IPv4 reassembly manipulation.
    - `HEADER_TYPE_IPV6` unit with `IPV6_FRAG_1` option for IPv6 reassembly manipulation.

Note that if the user needs IPv4 or IPv6 units for other use, the fragmentation units may not be shared and dedicated units must be defined.

— Allocate the first one or two schemes - one if only IPv4 is used, 2 if IPv6 is also used. The user should not configure those schemes, just save these schemes from other usage. The driver will use the first scheme for IPv4, and if needed, it will use the second for IPv6.

— Create reassembly manipulation using `FM_PCD_ManipNodeSet` routine. Pass the relative id's of the schemes allocated above (A single manipulation module should be created for both IPv4 and IPv6 fragmented frames, passing all relevant parameters).

— If CC is used, it is user's responsibility to leave two unused entries when building the CC root nodes (i.e. the total number of entries between all groups should not exceed 14).

— Set at least one scheme to catch regular/reassembled frames.

- When binding the Rx/Offline FMan Port to the PCD properties (i.e. calling `FM_PCD_SetPCD`), pass a handle to the created Reassembly Manipulation node.

Note that in order to perform distribution or classification on IPv4/IPv6 frames (unrelated to reassembly of IPv4/IPv6 fragments), independent IPv4/IPv6 units with no option must be explicitly defined.

What does the driver do?

In order to provide the required support for IP Reassembly, the driver performs some internal actions triggered by the user configuration. The following information describes the actions the driver internally performs and has no functional relevance to the user:

- When reassembly is required, the driver internally enables parser recognition of IPv4/IPv6 and shim2 - which is the IP Reassembly extension. This is triggered by the user defining NetEnv units with options: `IPV4_FRAG_1/IPV6_FRAG_1`.
- The driver loads the software parser that identifies IP fragments and enables its operation for the required FMan Port.
- The driver defines one or two (one for each IP version) Keygen schemes that recognize IP fragments and are programmed to generate an IP Reassembly key. When a frame is recognized as an IP fragment (by the Parser), it is steered to these Keygen schemes. The user should allocate the first one or two (for IPv4 and/or IPv6) schemes and pass their relative id's to the driver. The driver will internally initialize the relevant reassembly schemes when required.
- Each of the schemes above is programmed by the driver to point to a group in the Custom Classifier Root. If the user did not create a CC Root, the driver internally creates a new one. In both cases, the driver creates the needed group/s in the CC Root. It always uses the last two groups. It is user's responsibility to have at least two empty entries (one for a single IP version, two for both).
- The driver attaches the Manipulation sequence (created by the user) to the appropriate root entry node in the CC Root, causing the reassembly of IP fragments.

NOTE

The software parser code required to support reassembly may not coexist with user software parser code. If the user supplies IPv4 or IPv6 software parser code, it must include the code for handling IPv4/IPv6 reassembly according to the FMan controller spec.

Suggestions of how to use IPR in a system

The PCD with the IPR should identify frames up to L3; i.e. if the frame is IP or not.

In case it isn't an IP frame it should pass the desire PCD. IP frames should pass the reassembly process and than be directed to OP-Port to be classified according to their L3 and above.

8.2.5.2.7.2.3.9.3 IP Fragmentation

The FMan supports IP fragmentation for both IPv4 and IPv6. The fragmentation mechanism is implemented by the PCD, specifically by the Custom Classifier. IP fragmentation may be performed using an Offline Parsing FMan Port with a specific PCD configuration that will be described in this section.

The software driver provides API for initializing the IP fragmentation mechanism. driver's interface is not identical to the hardware resources and provide an abstraction layer to the hardware resources. Both of the AD (action descriptor) tables that used for IP fragmentation manipulation represented by the software Custom Classifier nodes using CC Manipulation. IP Fragmentation manipulation is used for fragmentation of IPv4 and IPv6 frames according to a specific MTU. This manipulation can be used on Offline Parsing ports only and as a part of the port's PCD definition. CC Nodes should have an IP fragmentation manipulation characterization in order to trigger this manipulation. This means that in order to create and initialize the IP fragmentation hardware, the user should create a Custom Classifier Node with Manipulation (refer to Custom Classifier Root). All relevant parameters such as MTU are defined during this module creation.

Following is the sequence that should be followed:

- Initialize general DPAA (BM, BM Portal, BM Pools, QM, QM Portal, FMan and FMan PCD)
- Initialize FMan Port of type Offline Parsing
- Define fragmentation PCD as follows:
  - Initialize an empty Network Environment (without any units)
  - Create fragmentation manipulation using `FM_PCD_ManipNodeSet` routine.
  - Create CC Node by calling `FM_PCD_MatchTableSet`/`FM_PCD_HashTableSet` and attached the fragmentation manipulation previously created to the desired key.
  - Build a CC Root with 1 group that points to the previously defined CC Node .
- Bind the Offline Parsing FMan Port to the PCD properties by calling `FM_PORT_SetPCD`

Manipulation parameters

- MTU of the fragmentation manipulation.
- Scratch Buffer Pool ID is a buffer pool that is required by the fragmentation process in order to ensure correct release operation of the frames and fragments. All IP Fragmentation Table Descriptors should use the same Scratch Buffer Pool ID. This pool must not be used by any other process or engine in the system.
- Don't Fragment Action - by setting this parameter the user can determine the action to be taken in case the IP packet is larger than the defined MTU and the 'Don't Fragment' (DF) bit of the frame is set.

NOTE

The software parser code required to support fragmentation may not coexist with user software parser code. If the user supplies IPv6 software parser code, it must include the code for handling IPv6 fragmentation according to the FMan controller spec.

Restrictions:

1. Tx confirmation is not supported.
2. Only Bman buffers shall be used for frames to be fragmented.
3. IP-Fragmentation will not work on OP-Port with VSP enabled.
4. fragmentation of IP-fragments is not supported
5. IPv4 packets containing header option field are fragments by copying all option fields to each fragment, regardless of the copy bit value.
6. Maximum number of fragments per frame is 16.

Suggestions of how to use IPF in a system:

In case one of the #1-#2 3 restrictions above is critical than it is suggested not to use IPF on OP-Ports that receive frames from the GPP and to do it on the GPP itself. We also suggest to put the IPF on a OP-Port just before the TX-Port.

8.2.5.2.7.2.3.9.4 IPSec Manipulation

The IPSec Manipulation is a specific instantiation of the special offload manipulation. It is designed to handle IPSec traffic in order to support the following actions:

- Support of variable outer header size

  The user should initialize a Manipulation node of this type passing the relevant parameters

- Support for both ipv4/ipv6 IP version within SA

  The user should initialize a Manipulation node of this type passing the relevant parameters.

- ECN/DSCP copying from inner/outer IP header to outer/inner.

  In order to use this functionality the user must follow the following steps:

  — Define a Manipulation node of this type passing the relevant parameters

  — For the relevant Rx/OP port, define a buffer prefix that includes at least the Keygen hash result.

  — Use SEC parameters to support this operation

8.2.5.2.7.2.3.10 Frame Replicator

The Frame Replicator (FR) is designed to duplicate incoming packets and route them to separate destinations. It is defined as a next engine and may follow other CC nodes, i.e. Match-table key, Hash-Table key or a CC-Root entry.

A Frame Replicator is realized by a group of members, where each member defines a replication of the incoming frame and a route to continue.

The next engine after FR is restricted to one of the following:

- Enqueue (PCD Termination)
- Policer
- Keygen (Direct scheme that leads to either Policer or PCD Termination)

When initializing an FR node, the user must define the maximum number of members this node may contain. The actual number of members may be modified on runtime by adding and removing FR group members.

Runtime modifications of add/remove members to/from the group can be done at any point in the system and in any location of the members group (first, middle or last). Note that runtime-modifications require the use of Host Command.

The order of the members in the group is of significance as the implementation of the replication is serial.

Manipulation may be applied to:

1. The whole group. The manipulation node should be placed before the replication group. That means that the FR is the next-engine of the Manip node. The Manip node is the next-engine of a key in a Match-table or Hash-table.
2. The last member of a FR group. That means that the manip node is the next-engine of the last member of the FR group.

NOTE

No support of Manip node after the "non-last" members.

The driver supports sharing of FR nodes means that FR group may be shared by more than one source.

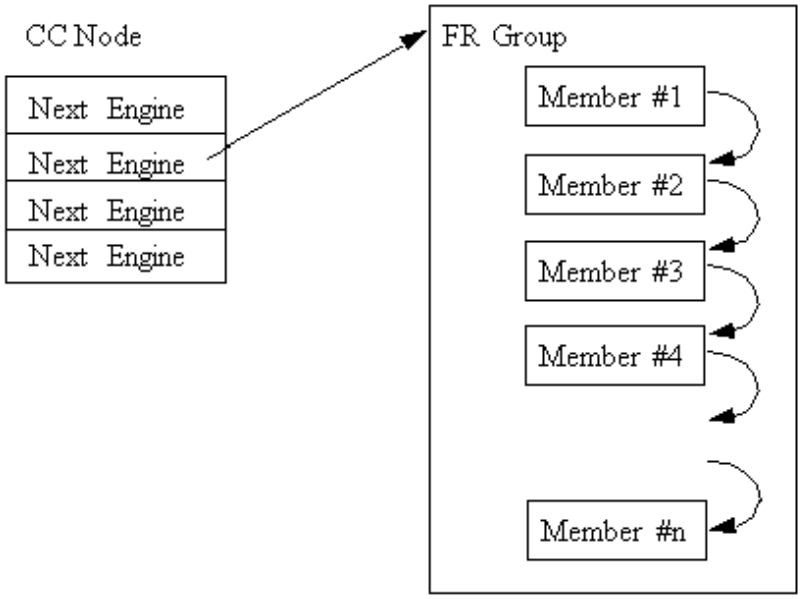

Figure 103. Frame Replicator Following a CC Node

Available API:

- `FM_PCD_FrmReplicSetGroup`
- `FM_PCD_FrmReplicDeleteGroup`

Specific runtime API:

- `FM_PCD_FrmReplicAddMember`
- `FM_PCD_FrmReplicRemoveMember`

NOTE

- For all manipulation types below, the user must call `'FM_PCD_SetAdvancedOffloadSupport'` before calling `'FM_PCD_Enable'`.
- For each RX/OP-Ports that will work with the above FM-PCD, the user should have at least 16 tnums (num of tasks). In order to set the tnums, the user should call '`FM_PORT_ConfigNumOfTasks`'.
- It is also required to set the DMA transactions to be per port by calling '`FM_ConfigDmaAidOverride`' with 'FALSE' and calling '`FM_ConfigDmaAidMode`' with '`e_FM_DMA_AID_OUT_PORT_ID`'

8.2.5.2.7.2.3.11 Policer Profiles

The policer profile entity relies on the hardware entity. It defines rules for policing for a certain flow. There are 256 different profiles in a frame manager that may be organized in per port windows. Some profiles may be shared between ports on the same PCD. By default, the number of shared profiles is set by the driver, but the user can also configure it to a different value. Shared profiles are typically used for aggregation.

When a PCD is defined in a single partition environment, it is the owner of all 256 profiles. When a PCD is defined in a multipartition environment, it is the owner of its shared profiles along with all the profiles that will be allocated per port for ports on this partition. The user must explicitly allocate per-port profiles for each port (if required), after PCD is initialized and prior to the profile initialization. Note that per-port profiles are the only PCD resource that is explicitly allocated and initialized for a specific port.

After profiles are mapped, the user may initialize each of the profiles by stating the following:

- Type

- Shared
- Per-port

- Offset relative to the port or to the shared group of profiles
- Characteristics

Once initialized, a handle is assigned to the profile for later use.

The Policer may be used after the Parser, Keygen or Custom Classifier, or solely - without activating any of the other PCD engines. It is not dependant on any previous output such as parser result. The policer may be used more than once in a frame flow. The next action after a police profile is either to pass the frame to a direct Keygen scheme for a new distribution (typically for control frames coming from the Custom Classifier), to pass the frame to another profile (always a shared profile, typically an aggregators), or to enqueue the frame to an FQID.

When other engines select a policer profile as the next engine, its handle must be passed. An exception is when a per-port profile is specified as the next engine of a scheme or of a "overrideParams" CC key. In these cases a port-relative index is required instead. The reason for this is that the required Policer Profile may not be initialized at this stage and hence have no handle. This irregular behavior is because CC Roots and KG schemes may be shared by ports, and at the time of scheme/root initialization, they are not yet bound to specific ports. In this context, the profile selected may in fact be uninitialized and therefore can't be verified by the driver. It is therefor user's responsibility to make sure it is set prior to port- PCD binding.

Runtime Modifications: Valid profiles may be modified at runtime by calling the profile initialization routine for an existing profile, passing the profile handle as retuned by the original initialization routine, and specifying modify (instead of the profile's relative id). New profiles may be set and unused profiles may be deleted anytime.

Available API:

- `FM_PCD_PlcrProfileSet`
- `FM_PCD_DeleteProfilePlcr`

8.2.5.2.7.2.3.12 PCD Organization

By initializing PCD resources, the user creates a directed graph in which the parser is the source of the graph and the FQIDs are its endpoints. Following figure shows a generalized example of a basic PCD graph.

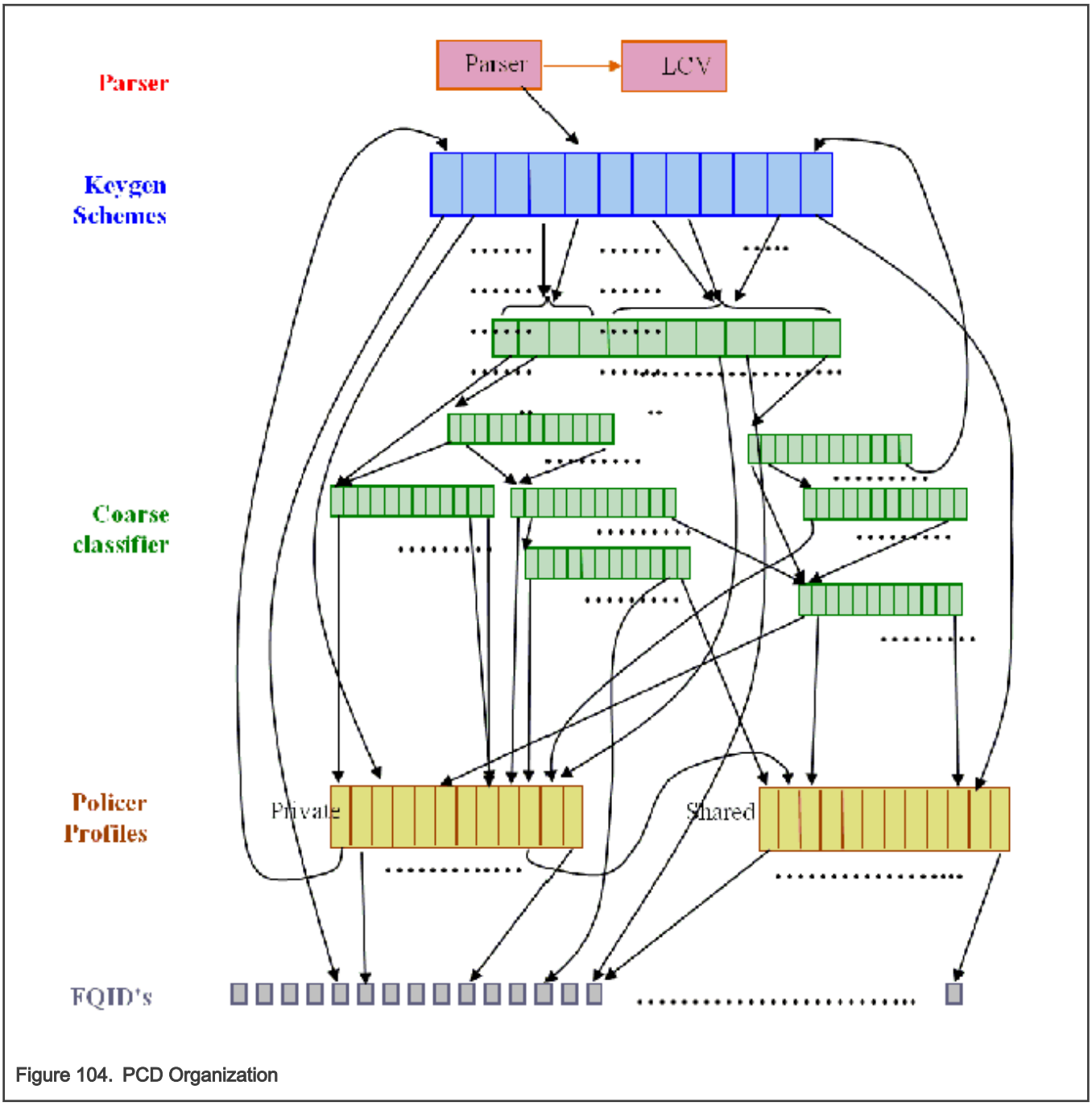

Figure 104. PCD Organization

8.2.5.2.7.2.3.13 PCD Definition Sequence

When a PCD graph is defined, its resources must be initialized bottom up when there's a dependency between them. Following figure shows the order of initialization (starting at the top of the figure) in a specific sequence.

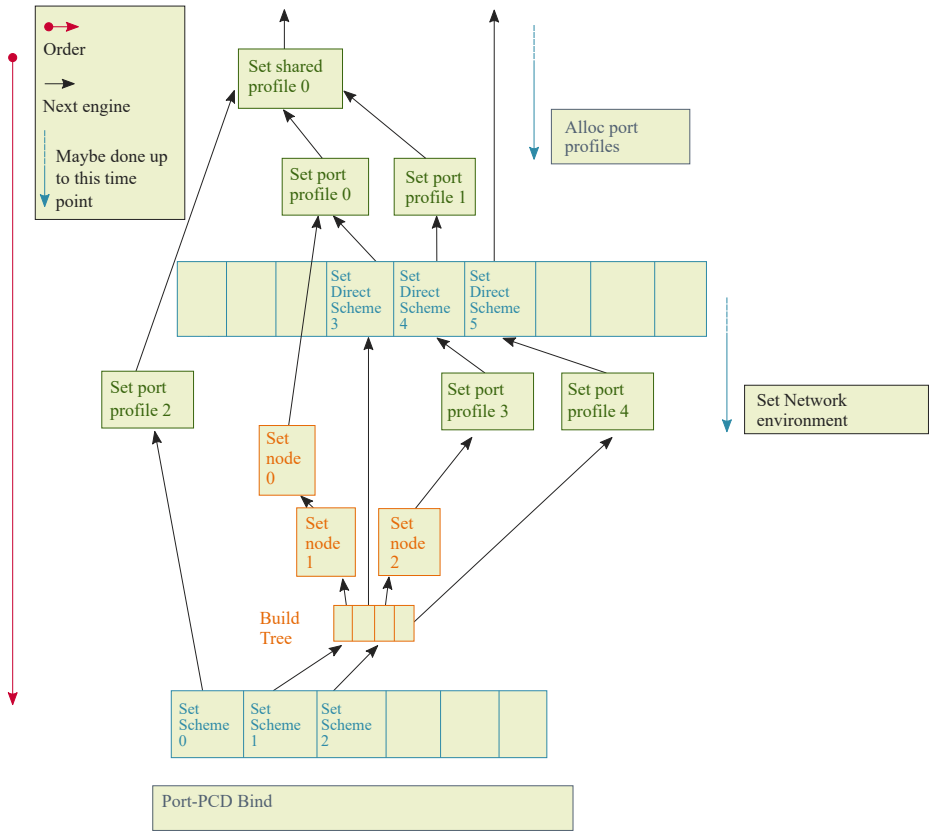

Figure 105. Definition Sequence

8.2.5.2.7.2.3.14 Host Command

Some PCD functionalities may be managed by either memory-mapped registers or by the host command mechanism to allow independent programming in a multipartition environment. In a single partition environment in the FMan driver, the host command mechanism is optionally used, but in a multipartition environment, wherever available, only the host command is used to prevent a risk of racing. The host command driver is a part of the PCD driver and is initialized internally by the driver, using user parameters.

When PCD is first initialized in a single-partition environment, the user must specify whether the host command should be used, and if so, host command parameters are required. In a multipartition environment, the use of the host command is forced and all host command parameters are required. When PCD initialization routine is called by the master/single partition driver, the user parameters include host command port parameters (such as port id, virtual address, and default queues) and the FMan Port for the host command is internally initialized.

8.2.5.2.7.2.3.15 PCD Statistics

The FMan PCD API provides access to all the statistics gathered by the FMan PCD engines hardware. Statistics is enabled by default but may be disabled/enabled at runtime using the dedicated API.

The following API routines may be called at any time after initialization to retrieve any of the following FMan PCD counters:

- `FM_PCD_GetCounter`
- `FM_PCD_KgSchemeGetCounter`

- FM_PCD_PlcrProfileGetCounter

8.2.5.2.7.2.3.15.1 Custom Classifier Statistics

A CC node supports statistics gathering on per-key basis. In order to enable statistics gathering by a CC node (Match table or Hash table), statistics mode must be provided upon initialization of that node and this will determine the statistics mode for all keys of the CC node.

Next, statistics should be enabled per-key, meaning statistics should be enabled for every key that the user wishes to monitor.

After these steps, the following API routines may be called to retrieve the statistics:

- FM_PCD_MatchTableGetKeyCounter
- FM_PCD_MatchTableGetKeyStatistics
- FM_PCD_MatchTableFindNGetKeyStatistics
- FM_PCD_HashTableFindNGetKeyStatistics

8.2.5.2.8 FMan Port Driver

The FMan Port driver module refers to the per-port features of the FMan, including port configuration and initialization, runtime functionalities and PCD binding.

8.2.5.2.8.1 FMan Port Hardware Overview

The FMan hardware supports a SoC dependent number of inline and offline FMan Ports of the following types:

- 1G Rx Ports
- 1G Tx Ports
- 10G Rx Ports (may be eliminated on some SoCs)
- 10G Tx Ports
- Offline/Host-command ports

Port configuration is controlled through a set of per-port, type-dependent memory mapped registers. I.e. Each port has its own memory map area. In addition, some FMan common registers also effect port behavior - for example, global resources such as tasks number are declared in the common registers are.

8.2.5.2.8.1.1 FMan Port Driver Software Abstraction

The FMan Port module is an independent module. On port configuration, the user selects the type and the mode of each port (Tx/Rx, 1G/10G, online/offline/Host command, regular/independent), and specifies the port index relative to its type. This index is not related to the hardware port id as described in the hardware spec.

The driver provides abstraction to the common/private division of registers location in the memory map. i.e. all registers that are logically relevant to the port are handled by the FMan Port driver, even if they physically belong to the common FMan memory map.

8.2.5.2.8.2 How to use the FMan Port Driver?

The following sections provide practical information for using the software drivers.

8.2.5.2.8.2.1 FMan Port Driver Scope

- FMan Port hardware structures configuration and enablement
- Resource allocation and management
- FMan port types support
- Offline-Parsing ports
- Independent-Mode
- Simple BMI-to-BMI (regular) mode

- PCD Binding
- Rate limiting
- Interrupt handling
- Statistics support

8.2.5.2.8.2.2 FMan Port Driver Sequence

- FMan Port Config routine
- [Optional] FMan Port advance configuration routines
- FMan Port Init routine
- FMan Port runtime routines
- FMan Port Free routine

8.2.5.2.8.2.3 FMan Port Driver Functional Description

The following sections describe main driver functionalities and their usage.

8.2.5.2.8.2.3.1 FMan Port Configuration and Initialization

On FMan Port driver initialization, the software configures all FMan Port registers. It supplies default values where no other values are specified, it enables hardware mechanisms and initializes software data structures for software management.

By the time initialization is done, FMan is ready to be used and any of the FMan sub-modules (FMan-Ports, MAC's etc.) may be initialized.

8.2.5.2.8.2.3.2 FMan Port Types

The driver provides API for the initialization of the following port types/modes:

- Tx 1G port
- Tx 1G port - independent mode
- Rx 1G port
- Rx 1G port - independent mode
- Tx 10G port
- Tx 10G port - independent mode
- Rx 10G port
- Rx 10G port - independent mode
- Offline Parsing Port

The driver also holds a single host-command port internally when mandatory (multi-partition environments) or when user explicitly requires it.

8.2.5.2.8.2.3.3 Independent-Mode

Dpaa-im is an Ethernet driver using Dpaa to implement in independent mode.

Dependence:

1. All the DPAA drivers in kernel have conflict with dpaa-im, should be disabled in kernel configuration file, the list as below:

CONFIG_FSL_SDK_DPA

CONFIG_FSL_SDK_FMAN

CONFIG_FSL_SDK_DPAA_ETH

CONFIG_FSL_DPAA

CONFIG_FSL_FMAN

CONFIG_FSL_DPAA_ETH

2. linux should be built before building dpaa-im

3. dpaa-im is based on dash-lts 1812 release for linux-4.9 and linux-4.14

Building

To build dpaa-im as a module

cd dpaa-im

make build KERNEL_DIR=<path-to-linux> ARCH=arm64 CROSS_COMPILE=<arm64-toolchain>

e.g. make build KERNEL_DIR=~/linux ARCH=arm64 CROSS_COMPILE=aarch64-linux-gnu-

after building, you will see module file "dpaa_eth_im.ko"

In addition, use "make clean KERNEL_DIR=<path-to-linux> ARCH=arm64 CROSS_COMPILE=<arm64-toolchain>" to clean

Using

1. Fman firmware should be loaded in uboot.

2. boot up linux

3. In linux, run command "insmod dpaa_eth_im.ko", kernel will print:

[0.535089] fman_im: QorIQ FMAN Independent Mode Ethernet Driver load ed

[0.541782] DEV: FM1@DTSEC3, DTS Node: fsl,dpaa:ethernet@6

4. run command "ifconfig -a", dpaa-im ethernet(FM1@DTSEC3) could be saw, then use it as normal ethernet.

FM1@DTSEC3 Link encap:Ethernet HWaddr 00:e0:0c:00:77:00

BROADCAST MULTICAST MTU:1500 Metric:1

RX packets:0 errors:0 dropped:0 overruns:0 frame:0

TX packets:0 errors:0 dropped:0 overruns:0 carrier:0

collisions:0 txqueuelen:1000

RX bytes:0 (0.0 B) TX bytes:0 (0.0 B)

lo Link encap:Local Loopback

inet addr:127.0.0.1 Mask:255.0.0.0

inet6 addr: ::1/128 Scope:Host

UP LOOPBACK RUNNING MTU:65536 Metric:1

RX packets:0 errors:0 dropped:0 overruns:0 frame:0

TX packets:0 errors:0 dropped:0 overruns:0 carrier:0

collisions:0 txqueuelen:0

RX bytes:0 (0.0 B) TX bytes:0 (0.0 B)

8.2.5.2.8.2.3.4 Resource Management

FMan Port related resources (TNUMs, DMAs, FIFOs, etc.)- These resources are used by the BMI. The driver selects default values for these resources but they may be need some tuning depending on the specific application, based on the total number of ports used and the performance requirements of the system. The driver provides an API routine

`FM_PORT_AnalyzePerformanceParams` that uses performance monitoring mechanism in order to see the resources utilization at runtime.

The FMan Port driver allocates its resources by calling the FMan "front-end" driver. The FMan "front-end" allocates the resources by calling the "back-end" through IPC if its in guest-mode or through direct call if its not in master-mode. The port driver does not access those resources at run-time; the resources are being used only by the hardware of a port.

PCD related resources (Keygen-schemes, policer-profiles, etc.)-During the initialization of the FMan-PCD driver on each partition, the driver allocates all the required resources (configurable by the user) through IPC call to the "back-end" driver. From that point, all the resources are being handled locally on the partition. Note, that all access to these resources are still done through host-command and that assures proper synchronization between different partitions (i.e. one can access these resources by mistake from a different partition in the system).

PCD Custom-Classifier tables-The CC tables are being allocated on the MURAM memory. This means that upon initialization of this partition, piece of MURAM should be allocated to the partition (according to how much the partition requires). From that point, the local PCD driver will manage the MURAM allocation by itself.

8.2.5.2.8.2.3.5 Virtual Storage Profiles Support

An FMan Port may use the legacy Physical Storage Profile or the Virtual Storage Profiles (VSP). This section will discuss the usage of VSP by an FMan port, while more information about the VSP mechanism which is implemented by the driver as separate entity `FM_VSP`, can be found in FMan VSP Driver.

When a user wants to set an Rx or OP port to work in virtualization mode using VSP's rather than the physical SP, user should call the function which allocates a storage profile window (range of VSPs allocated in continuously manner) to a port. The user should also define which profile in this range should be used as default SP; note that the default profile should be a relative index within the allocated window. Upon calling the window allocation routine, the driver enables virtual mode (i.e. using VSPs) for this port, allocates its profiles and defines default SP. In order to redirect a packet into a certain VSP, user may set the 'relative-VSP-id' within the PCD graph nodes (e.g. in the match-table entries). The value in the PCD graph nodes is port relative so if two ports are sharing the same PCD graph node (e.g. a match-table), the actual VSP will be selected by the 'relative-VSP-id' plus the port's base VSP as shown in the figure below.

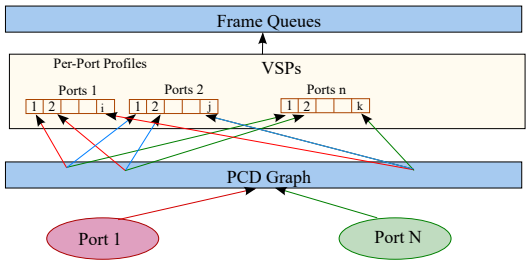

Figure 106. FMan PCD graph and the VSP selection

Rules and restrictions regarding the use of VSP:

- When called for Rx ports, the allocation routine expects also the handle of coupled Tx port as a parameter; the driver sets automatically the Tx port to work in VSP mode also and use the same default profile for this port.
- Storage Profiles windows may not overlap; i.e. sharing of VSPs between FM ports is not allowed by the driver.
- A call to the allocation routine requires that the FM port will be disabled. In the case of Rx port, coupled Tx port should also be disabled. When an FM Port (that has VSP mechanism enabled) is enabled, at least the default profile must be initialized.
- A call to the allocation routine may not be reverted, i.e. it's impossible to disable virtualization mode.
- Number of profiles to be allocated must be a power-of-2. In addition, the "base-profile" that will be allocated by the driver will be aligned to the number-of-profiles provided by the user.

- For FM-Port that works with VSP, its classification should also use VSP; i.e. classification (e.g. KG scheme or CC-node) should NOT try to revert from VSP to the FM-Port "physical" SP.
- When user frees all resources of FM port, the driver frees automatically VSP window which have been allocated for this port.

Initialization Sequence:

- Initialize FM Tx Port
- Initialize FM Rx Port
- Allocate VSP for FM Rx Port (thus enabling virtualization mode)
- Initialize default VSP (See FMan VSP Driver)
- Enable FM Ports

Free Sequence

- Disable Ports
- Free the default VSP
- Free FM Tx Port
- Free FM Rx Port

8.2.5.2.8.2.3.6 Rate Limiting

The driver supports the hardware mechanism of rate limiting for Tx ports. The runtime API consists of a number of parameters including a definition of the required rate (in KB/sec for Tx ports, in frame/sec for offline parsing ports) and refers to data rate rather than line-rate.

8.2.5.2.8.2.3.7 Simple BMI-to-BMI (regular) mode

This is the default FMan Rx/Offline Parsing Port mode. After Port initialization and prior to Port-PCD binding, all traffic will be received on the default Rx queue. This mode is called "BMI-To-BMI" as no PCD is involved in the data reception.

This mode is useful for the early state of a port as well as when major runtime PCD modification takes place. In such a case, sometimes the whole PCD functionality needs to be manipulated and the user should temporarily detach the Port from the PCD, receive all frames on the default Rx queue and only re-attach it to the PCD after the modifications have completed.

8.2.5.2.8.2.3.8 Port LIODN

An FMan Port LIODN is constructed out of a base and offset.

Upon FMan Port configuration, the user must specify the port's base LIODN.

For Rx ports, the user must also specify the LIODN offset for each port. No such configuration is required for Tx and Offline Parsing ports since on transmission, the offset LIODN is taken from the frames' FD. The FD is set according to the source of the frame - if transmitted by CPU, it is dynamically set by the QM SW portal. Another scenario is frames forwarded by other engines, in such a case their FD must contain the correct LIODN offset.

8.2.5.2.8.2.3.9 Port-PCD Binding

Ports may be linked to the PCD graph according to their PCD binding specifications and considering partition and Network Environment restrictions.

Following figure shows a schematic demonstration of possible port > PCD binding.

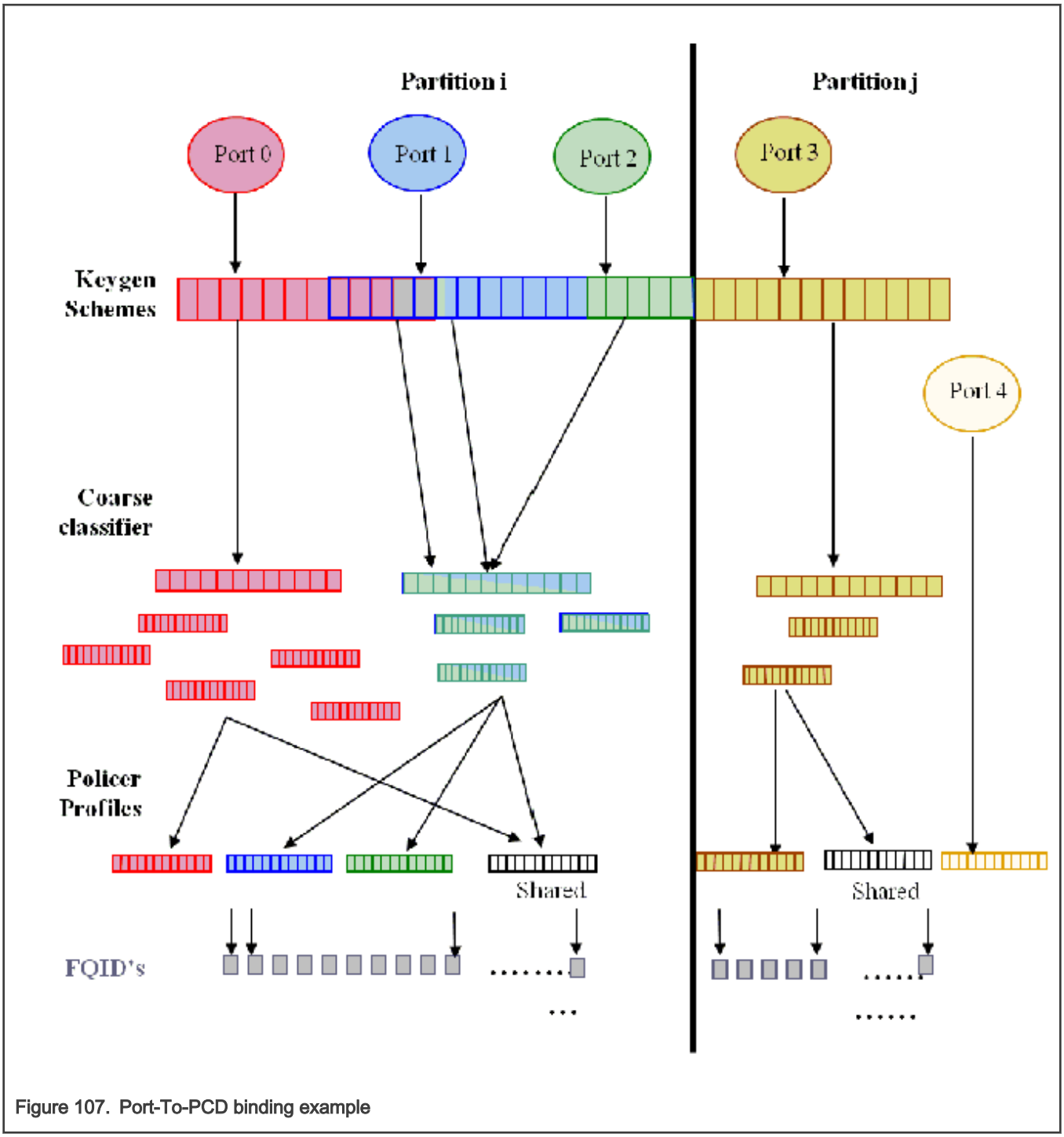

Figure 107. Port-To-PCD binding example

Once a set of PCD resources is set and organized as described above, a port may be bound to all or some of the resources by calling the `FM_PORT_SetPCD` routine. This routine, is referred to as the Port-PCD bind routine. It accepts a set of parameters that specify the PCD resources used by the port, configures PCD related parameters in the port, and bounds PCD resources to the port. The `FM_PORT_DeletePCD` should be called when the port no longer needs the configured PCD functionality. This action is referred to as Port-PCD unbinding.

Another possible action that affects the Port-PCD relationship is calling `FM_PORT_DettachPCD` for a port that is bound to PCD. This causes the port to stop using the PCD functionalities, which results in all frames being passed to the default FQID. Note that calling `FM_PORT_DeletePCD` unbinds the port from the PCD functionalities by removing the connections, while `FM_PORT_DetachPCD` does not remove them but only causes the port to stop using them. To return to using the PCD, `FM_PORT_AttachPCD` should be called.

Certain runtime modifications may not be done directly, but require either the unbinding of PCD functionalities or PCD detaching. This should be done by calling the required delete/detach routines, making the desired changes, and calling set or attach to return to using the PCD. These actions will be referred to as resetting/detaching the Port-PCD. In the time between the calls of the two routines, the port continues to work, but its PCD functionalities are disabled. In both cases, all frames arriving at this time are enqueued to the default receive queue.

In the sections below, the relationship between the port and each of the PCD resources will be explained in terms of initialization and runtime modifications.

General

The port-PCD binding affects the flow of received frames on that port in terms of PCD functionality. The user must first define the general PCD for the port, using the following enumeration types, which define the superset of engines that may be used.

- `e_FM_PORT_PCD_SUPPORT_PRS_ONLY` (Use only Parser)
- `e_FM_PORT_PCD_SUPPORT_PLCR_ONLY` (Use only Policer)
- `e_FM_PORT_PCD_SUPPORT_PRS_AND_PLCR` (Use Parser and Policer)
- `e_FM_PORT_PCD_SUPPORT_PRS_AND_KG` (Use Parser and Keygen)
- `e_FM_PORT_PCD_SUPPORT_PRS_AND_KG_AND_CC` (Use Parser, Keygen and Custom Classifier)
- `e_FM_PORT_PCD_SUPPORT_PRS_AND_KG_AND_CC_AND_PLCR` (Use all PCD engines)
- `e_FM_PORT_PCD_SUPPORT_PRS_AND_KG_AND_PLCR` (Use Parser, Keygen and Policer)

Runtime Modifications: The engines set may be changed at runtime only by resetting the Port-PCD.

Available General Port API:

- `FM_PORT_SetPCD`
- `FM_PORT_DeletePCD`

Network Environment

When calling the Port-PCD binding routine, the user must specify a single NetEnv by passing its handle. This setting is used for the port parser and affects the PCD behavior.

Runtime Modifications: The NetEnv may not be modified at runtime. If the port requires a change of its NetEnv, it must first reset its Port-PCD connection, than use the PCD routines to do the required changes, and than re-connect to the PCD.

Parser

The hardware parser port configuration is taken directly from the NetEnv specified for the port. Other parsing configurations are explicitly defined by the user at the parameter's structure.

The software parser may be used on a per-port-per-header basis. When PCD is set per port, there is an option in the parser parameters to choose additional parameters per header. One of the optional per-header additional parameters is to enable the software parser for that header. When set, an index should be declared to select the software parser code. The header and index must be specified in the labels' table of the software parser code that was loaded on PCD initialization. Software parser enablement may be done for as many headers as required.

Runtime Modifications: Only the starting point of the parser may be changed on the fly. Any other changes require PCD resetting.

Available Port API:

- `FM_PORT_PcdPrsModifyStartOffset`

Keygen Schemes

In order for a port to use Keygen schemes, the port must be bound to those resources. The port may be bound to any number of schemes. At the port bind routine, the user passes a list of scheme handles, as returned by the server at scheme setting, for binding to the port. At least one scheme must be specified. All specified schemes must be valid at that time. If the initial scheme after the parser is used directly without using the match criteria, its id should be passed as one of the parameters to the Port-PCD binding routine.

Runtime Modifications: During runtime, new schemes may be set and then bound to an existing enabled port or existing schemes may be modified. Schemes that are not required by the port may be unbound. Note that when modifying existing schemes, all ports bound to those schemes are affected. If specific schemes are not required anymore, they must first be unbound from the port. If no other port is using them, they may be deleted. The selection of the initial scheme after parser (from direct to indirect and vice versa) may be also changed at runtime.

Available Port API:

- `FM_PORT_PcdKgBindScheme`
- `FM_PORT_PcdKgUnbindScheme`
- `FM_PORT_PcdKgModifyInitialScheme`

Custom Classifier graphs

If a port is using the Custom Classifier graph, an initialized Custom Classifier Root handle (as returned by the RootBuild routine) must be passed when calling the port bind routine.

Runtime Modifications: The CC graph (as well as the CC Root) itself may be modified at runtime, but ports binding to a CC Root may be changed only by detaching and than re-attaching the Port-PCD.

- `FM_PORT_PcdCcModifyTree`

Policer Profiles

Before any port profile is set, the profile allocation routine must be called to bind the port to the policer profile. This is required as the port's binding to the policer profile is not done using the port bind routine. It is only then that per-port profiles may be set, and the port bind routine is subsequently called. If Keygen or parser are not used (i.e. policer is reached directly after parser or from BMI), the port bind routine parameters must specify which policer profile is used (otherwise, no policer parameters are required).

Runtime Modifications: The initial profile selection may be changed during runtime. All profiles allocated to a port are in fact bound to this port, so no runtime binding/unbinding is possible. Uninitialized port profiles (profiles that were allocated for this port but not used) may also be set during runtime, or existing profiles may be modified. If specific profiles are not required anymore, they may be deleted. If a change in port profile allocation is required, follow the steps given below to reset the Port-PCD:

1. Port-PCD deleted
2. Profiles deleted and freed
3. New profiles allocated and set
4. Port-PCD set

Available Port API:

- `FM_PORT_PcdPlcrModifyInitialProfile`
- `FM_PORT_PcdPlcrFreeProfiles`
- `FM_PORT_PcdPlcrAllocProfiles`

8.2.5.2.8.2.3.10 Port-PCD Binding Changes

There are three levels of Port-PCD binding changes:

- **Basic Runtime Modifications-**May be invoked while PCD is active and on enabled ports using PCD.
  - Port routines responsible for binding/unbinding to/from the modified resources.
    - `FM_PORT_PcdKgBindScheme`
    - `FM_PORT_PcdKgUnbindScheme`
  - Port routines responsible for PCD change of behavior.
    - `FM_PORT_PcdKgModifyInitialScheme`
    - `FM_PORT_PcdPlcrModifyInitialProfile`

- FM_PORT_PcdPrsModifyStartOfset

- **Port-PCD Detach Runtime Modifications-**For changes that require detaching the Port-PCD connection:
  - FM_PORT_PcdCcModifyTree

    For these modifications, take the following steps:
    - Detach the port from its PCD resources by calling the Detach PCD routine (FM_PORT_DettachPCD). After this action, the port continues to work enqueueing all frames to the default receive FQID.
    - Call one of the two routines above.
    - Re-attach port to PCD resources by recalling the set PCD routine (FM_PORT_AttachPCD).
- **Port-PCD Reset Runtime Modifications-**For changes that require resetting of the port-PCD binding.

  The following steps should be taken for any modification that is not listed under the last two items:
  - Unbind port from its PCD resources by calling the delete PCD routine (FM_PORT_DeletePCD). After this action the port will continue to work, enqueueing all frames to the default receive FQID.
  - Modify PCD resources-optional. The change may be only in the binding of the port and not on the resources. Note that the freeing and deleting of resources, and then allocating and setting resources, must be orderly, in the same manner as for initial PCD setting and final PCD deleting.
  - Bind port to PCD resources by recalling the set PCD routine (FM_PORT_DeletePCD)

All PCD routines listed above may be used for deleting and setting PCD resources. The following two routines below are used if a change of port profiles window is required (Other PORT routines are not needed as binding is done using SetPCD routine.):

- FM_PORT_PcdPlcrFreeProfiles
- FM_PORT_PcdPlcrAllocProfiles

8.2.5.2.9 FMan MAC Driver

The FMan MAC driver module refers to the FMan MAC controller functionalities including configuration and initialization as well as runtime and control.

8.2.5.2.9.1 FMan MAC Hardware Overview

The FMan hardware supports one or two kinds of MAC controllers - depending on SoC. All SoCs support three-speed Ethernet controller (dTSEC) interfaces to 10 Mbps, 100 Mbps, and 1 Gbps Ethernet/IEEE 802.3 networks which interfaces the media through external phy or SerDes device. Some SoCs also support 10 Gigabit Ethernet media access controller (10GEC) which interfaces to 10 Gbps Ethernet/IEEE 802.3ae networks via XAUI using the high-speed SerDes interface.

8.2.5.2.9.1.1 FMan MAC Software Abstraction

The driver provides a unique API serving both interfaces. If user tries to configure features that are supported only by one of the interfaces, an "unsupported" message will be displayed.

8.2.5.2.9.2 How To Use The FMan MAC Driver?

The following sections provide practical information for using the software drivers.

8.2.5.2.9.2.1 FMan MAC Driver Scope

This module represents the FMan MAC. It includes:

- FMan MAC hardware structures configuration and enablement
- FMan MAC controller runtime support
- PTP IEEE 1588 support
- MAC hash addressing

- Interrupt handling
- Statistics support

8.2.5.2.9.2.2 FMan MAC Driver Sequence

- FMan MAC Config routine
- [Optional] FMan MAC advance configuration routines
- FMan MAC Init routine
- FMan MAC runtime routines
- FMan MAC Free routine

8.2.5.2.9.2.3 FMan MAC Driver Functional Description

The following sections describe main driver functionalities and their usage.

8.2.5.2.9.2.3.1 FMan MAC Configuration and Initialization

On FMan MAC driver initialization, the software configures all FMan MAC registers. If required, MAC may be reset at that time. The driver supplies default values where no other values are specified, it defines IRQ's and sets IRQ handles. It enables hardware mechanisms and initializes software data structures for software management.

By the time initialization is done, FMan MAC is ready to be used and the relative FMan Ports may be initialized.

8.2.5.2.9.2.3.2 FMan MAC Addressing

On MAC initialization, the user must define a single MAC address. During runtime, the driver provides API for modifying this address and adding other addresses (depending on the specific MAC hardware support).

In addition, the driver supports the addition and removal of addresses to the MAC hash mechanism.

8.2.5.2.9.2.3.3 IEEE1588 Support

The driver provides the API to support the hardware IEEE1588 time-stamping. In order to use this feature, the user must first initialize the FM-RTC module. IEEE1588 functionality is always enabled on FM-MAC. Thus, no additional settings are required for the MAC. and the FM-MAC and only then they can enable this feature by calling `FM_MAC_Enable1588TimeStamp` routine. Once enabled, the user may also set the exception for receiving 1588 relevant interrupts on the MAC.

8.2.5.2.9.2.3.4 MAC Statistics

The driver provides statistics gathering support for all the standard (MIB) counters. For some controllers, it is necessary to use an interrupt driven mechanism for accounting for counters overflow and in order to keep track on the accurate counters. This mechanism may have some influence on performance, and therefor the driver supports statistics gathering in 3 levels:

- Full statistics-provides all standard counters but may reduce performance.
- Partial statistics-provides only special event counters (errors etc.). If selected, regular counters (such as byte/packet) will be invalid and will return -1.
- No statistics gathering.

8.2.5.2.10 FMan VSP Driver

The FMan VSP driver module refers to the software support provided for the Virtual Storage Profile mechanism.

8.2.5.2.10.1 FMan VSP Hardware Overview

VSPs may be used by user for virtualization. If a user is running with a multi-partitioned (or with a multiple software entities) system where a single MAC may be used by several software partitions/entities simultaneously, except for using a different FQID (that

is already available in DPAA1.0), user may use a different VSP for each SW partition/entity; that way, the buffer may be private (rather than being shared as in DPAA1.0). It allows the virtualization of the buffer pool selection for frame storage (and other parameters related to storage in external memory) from the physical hardware ports. Using this mechanism, different packets received on the same physical port may be stored in different BM pools based on the frame header, in a similar way to FQID selection. VSPs are replacing the legacy, "physical", per-port BM Pool selection. A backward compatible mode exists and it is possible to use the original BM Pool selection, now referred to as "Physical SP".

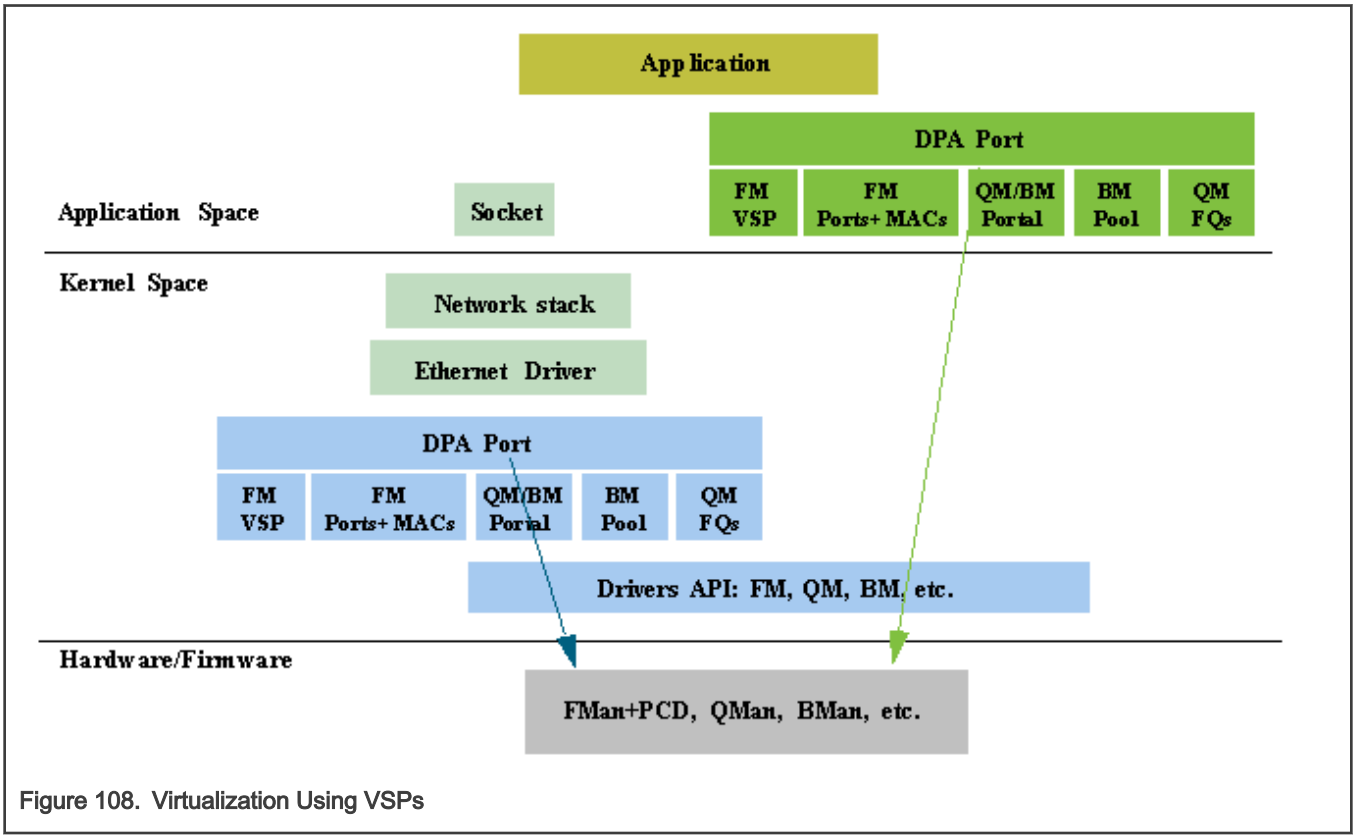

Figure 108. Virtualization Using VSPs

The global FMan module is in charge of the Virtual Storage Profiles entries management. On FMan initialization, the first VSP index dedicated to this partition must be defined (it should be an absolute index), and so is the total number of VSP's for this partition. Later, for each port using VSP's, a window of entries should be defined. VSPs may not be shared among FMan ports.

Each port has a default VSP. On each PCD classification, a VSP may be selected. Received packets will be written into the destination buffer according to the VSP parameters, while the VSP is selected according to the frame headers and the PCD configuration.

The VSP is implemented by the driver as separate entity, however, other modules of the FM driver are aware of this entity and interact with it. An FM VSP module represents a single storage profile.

The global FMan module is in charge of the Virtual Storage Profiles entries management. On FMan port initialization, if using VSP mode, it should allocate and bind to a range of VSP's. On the PCD, A decision is being taken by user on every node of the PCD graph whether to continue to work with previously defined VSP or to override with a new profile.

8.2.5.2.10.2 How To Use The FMan VSP Driver?

The VSP is implemented by the driver as separate entity, however, other modules of the FM driver are aware of this entity and interact with it. An FM VSP module represents a single storage profile.

The global FMan module is in charge of the Virtual Storage Profiles entries management. On FMan port initialization, if using VSP mode, it should allocate and bind to a range of VSP's. On the PCD, A decision is being taken by user on every node of the PCD graph whether to continue to work with previously defined VSP or to override with a new profile.

8.2.5.2.10.2.1 FMan VSP Driver Scope

This module represents the FMan VSP driver. It includes:

- FMan VSP hardware structures configuration and enablement
- Parsing of the buffer
- Statistics

8.2.5.2.10.2.2 FMan VSP Driver Sequence

This sequence includes other modules required for the VSP

- Definition of general VSP parameters on global FMan initialization
- FM Port initialization
- FM Port VSP window allocation
- FM Port enablement
- FMan VSP Config routine (for specific VSP's)
- [Optional] FMan VSP advance configuration routines (for specific VSP's)
- FMan VSP Init routine (for specific VSP's)

8.2.5.2.10.2.3 FMan VSP Driver Functional Description

The following sections describe main driver functionalities and their usage.

8.2.5.2.10.2.3.1 Virtual Storage Profile Initialization

The VSP's must be initialized prior to their usage. It is user's responsibility to initialize at least the default VSP for each port before enabling it. Similarly, it is their responsibility to initialize all other VSPs before a classification that may use some VSP is enabled.

Initializing a VSP defines the destination BM Pool buffer for a specific type of packets. It also defines the structure of the buffer - i.e. the data offset, the prefix content, etc.

8.2.5.2.10.2.3.2 Virtual Storage Profile Parsing

On VSP initialization, the user defines the buffer prefix content. Based on these requirements, the driver then defines the buffer prefix structure, i.e. data offset, whether certain information such as parse result should be copied to the external buffer and where it will be located. On buffer reception, the user may call VSP routines in order to get the data, as well as the buffer prefix sections such as parse result, time stamp, or Keygen output.

8.2.5.2.11 FMan RTC (IEEE 1588) Driver

The FMan RTC driver module refers to the software support provided for the IEEE 1588 hardware of the FMan.

8.2.5.2.11.1 FMan RTC Hardware Overview

The 1588 timer module interfaces to up to four 10/100/1000 or one 10G Ethernet MACs, providing current time, 2 alarms, and 2 fiper periodic pulse generators.

8.2.5.2.11.2 How To Use The RTC Driver?

The following sections provide practical information for using the software drivers.

8.2.5.2.11.2.1 RTC Driver Scope

This module represents the FMan 1588 driver. It includes:

- IEEE 1588 hardware configuration and enablement

- Support for alarm mechanism
- Support for periodic pulse
- Support for external trigger
- Runtime compensation tuning
- Interrupt handling

8.2.5.2.11.2.2 RTC Driver Sequence

- FMan RTC Config routine
- [Optional] FMan RTC advance configuration routines
- FMan RTC Init routine
- FMan RTC Enable routine
- FMan RTC runtime routines
- FMan RTC Free routine

8.2.5.2.11.2.3 RTC Driver Functional Description

The following sections describe main driver functionalities and their usage.

8.2.5.2.11.2.3.1 FMan RTC 1588 module utilization

The driver API provides interface to the 1588 hardware module. It initializes its registers to define the clock period and it supports the definition of the alarms and periodic pulses. Note that When setting periodic pulse, the RTC module must be disabled.

8.2.5.2.11.2.3.2 Utilizing IEEE1588 for MAC frames time stamping

Several FMan driver modules are involved in having the 1588 time stamping functionality activated: FMan-RTC, FMan-MAC, FMan-Port and FMan-PCD.

The initialization sequence is as described below:

After the Frame Manager is initialized, the FMan-RTC needs to be initialized by calling (with the appropriate parameters):

- `FM_RTC_Config`
- `FM_RTC_Init`

Next, the following routine should be called, only after MAC is initialized.

- `FM_MAC_Enable1588TimeStamp`

From this point and on all the Ethernet frames on this MAC are time-stamped. In order to obtain the timestamp, during the FMan Port configuration, the user must call the advance config routine:

- `FM_PORT_ConfigBufferPrefixContent` (with 'passTimeStamp' parameter set).

At run-time, for each received/confirmed frame, the user should call the following routine, passing it the frame's data pointer:

- `FM_PORT_GetBufferTimeStamp`

The routine will return the pointer to the time stamp.

8.2.5.2.11.2.3.3 Utilizing IEEE1588 for PTP

The sequence described in the previous section causes all the frames that are being received or transmitted by FMan to be time-stamped. However, if the user wants to distinguish PTP frames from other frames on a specific port, PCD rules need to be applied on the PCD graph for this port; i.e using the parser to recognize the PTP frame and then using an appropriate scheme to distinguish PTP frames and route them to the desired destination queues.

8.2.5.2.12 FMan MURAM Driver

The FMan MURAM driver module refers to the memory management of the FMan Multi User RAM.

8.2.5.2.12.1 FMan MURAM Hardware Overview

The MURAM is the internal memory of the FMan.

8.2.5.2.12.1.1 FMan MURAM Driver Software Abstraction

The FMan MURAM driver is a memory manager that allows partitioning of the MURAM. Upon initialization the user receives a handle that may be used by other modules in order to allocate and de-allocate memory blocks out of that MURAM partition.

8.2.5.2.12.2 How To Use The FMan MURAM Driver?

The following sections provide practical information for using the software drivers.

8.2.5.2.12.2.1 FMan MURAM Driver Scope

This module manages the FMan MURAM. It includes MURAM allocation and de-allocation of different sizes of required memory blocks.

8.2.5.2.12.2.2 FMan MURAM Driver Sequence

- FMan MURAM config and init routine
- FMan MURAM allot and free runtime routines
- FMan MURAM free routine

8.2.5.2.12.2.3 FMan MURAM Driver Functional Description

The FMan MURAM drivers supports MURAM memory blocks allocation and de-allocation. After initializing an MURAM partition, the user is normally required to pass its handle to other FMan driver modules. In this way, these modules may allocate and de-allocate memory blocks from this partition.

8.2.5.2.13 Supported Network Protocols

The following sections show the protocols that may be selected when defining NetEnv characteristics.

8.2.5.2.13.1 L2 Protocols

The following list shows the L2 protocols:

- `HEADER_TYPE_ETH`, with the following two options
  - `ETH_BROADCAST`
  - `ETH_MULTICAST`
- `HEADER_TYPE_VLAN`, with the following option
  - `VLAN_STACKED`
- `HEADER_TYPE_MPLS`, with the following option
  - `MPLS_STACKED`
- `HEADER_TYPE_PPPoE`
- `HEADER_TYPE_LLC_SNAP`

8.2.5.2.13.2 L3 Protocols

The following list shows the L3 protocols:

- HEADER_TYPE_IPV4, with the following options
  - IPV4_BROADCAST_1
  - IPV4_MULTICAST_1
  - IPV4_UNICAST_2
  - IPV4_MULTICAST_BROADCAST_2
  - IPV4_FRAG_1
- HEADER_TYPE_IPV6, with the following options
  - IPV6_MULTICAST_1
  - IPV6_UNICAST_2
  - IPV6_MULTICAST_2
  - IPV6_FRAG_1
- HEADER_TYPE_GRE
- HEADER_TYPE_MINENCAP
- HEADER_TYPE_USER_DEFINED_L3

8.2.5.2.13.3 L4 Protocols

The following list shows the L4 protocols:

- HEADER_TYPE_TCP
- HEADER_TYPE_UDP
- HEADER_TYPE_SCTP
- HEADER_TYPE_DCCP
- HEADER_TYPE_IPSEC_AH
- HEADER_TYPE_IPSEC_ESP
- HEADER_TYPE_USER_DEFINED_L4

8.2.5.2.13.4 Private Headers

- HEADER_TYPE_USER_DEFINED_SHIM1
- HEADER_TYPE_USER_DEFINED_SHIM2

8.2.5.2.13.5 Fields Supported By Driver for Keygen Extraction

Fields supported as "full fields":

- HEADER_TYPE_ETH
  - NET_HEADER_FIELD_ETH_DA
  - NET_HEADER_FIELD_ETH_SA
  - NET_HEADER_FIELD_ETH_TYPE
- HEADER_TYPE_LLC_SNAP
  - NET_HEADER_FIELD_LLC_SNAP_TYPE
- HEADER_TYPE_VLAN
  - NET_HEADER_FIELD_VLAN_TCI

(index may apply:

- e_FM_PCD_HDR_INDEX_NONE/e_FM_PCD_HDR_INDEX_1,
- e_FM_PCD_HDR_INDEX_LAST)

- HEADER_TYPE_MPLS
  - NET_HEADER_FIELD_MPLS_LABEL_STACK

    (index may apply:

    - e_FM_PCD_HDR_INDEX_NONE/e_FM_PCD_HDR_INDEX_1,
    - e_FM_PCD_HDR_INDEX_2,
    - e_FM_PCD_HDR_INDEX_LAST)

- HEADER_TYPE_IPv4
  - NET_HEADER_FIELD_IPv4_SRC_IP
  - NET_HEADER_FIELD_IPv4_DST_IP
  - NET_HEADER_FIELD_IPv4_PROTO
  - NET_HEADER_FIELD_IPv4_TOS

    (index may apply:

    - e_FM_PCD_HDR_INDEX_NONE/e_FM_PCD_HDR_INDEX_1,
    - e_FM_PCD_HDR_INDEX_2/e_FM_PCD_HDR_INDEX_LAST)

- HEADER_TYPE_IPv6
  - NET_HEADER_FIELD_IPv6_SRC_IP
  - NET_HEADER_FIELD_IPv6_DST_IP
  - NET_HEADER_FIELD_IPv6_NEXT_HDR
  - NET_HEADER_FIELD_IPv6_VER | NET_HEADER_FIELD_IPv6_FL | NET_HEADER_FIELD_IPv6_TC (must come together!)

    (index may apply:

    - e_FM_PCD_HDR_INDEX_NONE/e_FM_PCD_HDR_INDEX_1,
    - e_FM_PCD_HDR_INDEX_2/e_FM_PCD_HDR_INDEX_LAST)

    NOTE

    NET_HEADER_FIELD_IPv6_NEXT_HDR with e_FM_PCD_HDR_INDEX_LAST indication, applies to the very last next header indication, meaning the next L4, which may be present at the Ipv6 last extension. On earlier revisions this field applies to the Next-Header field of the main IPv6 header)

- HEADER_TYPE_IP
  - NET_HEADER_FIELD_IP_PROTO

    (index may apply:

    - e_FM_PCD_HDR_INDEX_LAST)
  - NET_HEADER_FIELD_IP_DCSP

    (index may apply:

    - e_FM_PCD_HDR_INDEX_NONE/e_FM_PCD_HDR_INDEX_1)

- HEADER_TYPE_GRE

    — NET_HEADER_FIELD_GRE_TYPE

- HEADER_TYPE_ETH
    — NET_HEADER_FIELD_ETH_DA
    — NET_HEADER_FIELD_ETH_SA
    — NET_HEADER_FIELD_ETH_TYPE
- HEADER_TYPE_MINENCAP
    — NET_HEADER_FIELD_MINENCAP_SRC_IP
    — NET_HEADER_FIELD_MINENCAP_DST_IP
    — NET_HEADER_FIELD_MINENCAP_TYPE
- HEADER_TYPE_TCP
    — NET_HEADER_FIELD_TCP_PORT_SRC
    — NET_HEADER_FIELD_TCP_PORT_DST
    — NET_HEADER_FIELD_TCP_FLAGS
- HEADER_TYPE_UDP
    — NET_HEADER_FIELD_UDP_PORT_SRC
    — NET_HEADER_FIELD_UDP_PORT_DST
- HEADER_TYPE_UDP_LITE (relevant only if FM_CAPWAP_SUPPORT define)
    — NET_HEADER_FIELD_UDP_LITE_PORT_SRC
    — NET_HEADER_FIELD_UDP_LITE_PORT_DST
- HEADER_TYPE_IPSEC_AH
    — NET_HEADER_FIELD_IPSEC_AH_SPI
    — NET_HEADER_FIELD_IPSEC_AH_NH
- HEADER_TYPE_IPSEC_ESP
    — NET_HEADER_FIELD_IPSEC_ESP_SPI
- HEADER_TYPE_SCTP
    — NET_HEADER_FIELD_SCTP_PORT_SRC
    — NET_HEADER_FIELD_SCTP_PORT_DST
- HEADER_TYPE_DCCP
    — NET_HEADER_FIELD_DCCP_PORT_SRC
    — NET_HEADER_FIELD_DCCP_PORT_DST
- HEADER_TYPE_PPPoE
    — NET_HEADER_FIELD_PPPoE_PID
    — NET_HEADER_FIELD_PPPoE_SID

Fields supported as "from fields":

- HEADER_TYPE_ETH (with or without validation):
    — NET_HEADER_FIELD_ETH_TYPE
- HEADER_TYPE_VLAN (with or without validation):
    — NET_HEADER_FIELD_VLAN_TCI

(index may apply:

- e_FM_PCD_HDR_INDEX_NONE/e_FM_PCD_HDR_INDEX_1,
- e_FM_PCD_HDR_INDEX_LAST)

- HEADER_TYPE_IPv4 (without validation):
  - NET_HEADER_FIELD_IPv4_PROTO

    (index may apply:

    - e_FM_PCD_HDR_INDEX_NONE/e_FM_PCD_HDR_INDEX_1,
    - e_FM_PCD_HDR_INDEX_2/e_FM_PCD_HDR_INDEX_LAST)

- HEADER_TYPE_IPv6 (without validation):
  - NET_HEADER_FIELD_IPv6_NEXT_HDR

    (index may apply:

    - e_FM_PCD_HDR_INDEX_NONE/e_FM_PCD_HDR_INDEX_1,
    - e_FM_PCD_HDR_INDEX_2/e_FM_PCD_HDR_INDEX_LAST)

8.2.6 Frame Manager Configuration Tool User's Guide

8.2.6.1 Introduction

The Frame Manager (FMan) is part of NXP's Data Path Acceleration Architecture (DPAA), a set of logical blocks that lets multiple processors (cores) interact with multiple network interfaces and accelerators with low software overhead.

The Frame Manager Configuration Tool (FMC Tool) is a command-line program that converts Parse-Classify-Police-Distribute (PCD) descriptions of network packet flows into hardware configuration code for the FMan's KeyGen, Controller, and Policer functions.

The tool provides an abstraction layer: You define your application's PCD requirements in a high-level, XML markup language (NetPDL with NXP extensions). The tool translates these definitions into code that initializes the FMan's registers and data structures. This abstraction makes learning low-level hardware details unnecessary, allows new users to be productive more quickly, and simplifies the programming task for everyone.

8.2.6.2 FMC Tool Features

The FMC Tool can analyze input NetPDL and NetPCD XML files that define the parse, classify, police, and distribute behavior your application requires. The tool can then:

- Passes this information directly to the FMan by calling the appropriate FMan driver API functions. (See FMC Tool - Runtime Environment Mode.)
- Generate C source files containing this information that you can include in your application. (See FMC Tool - Host Mode.)

In more detail, the FMC Tool can perform the tasks listed below. The particular actions taken depend upon your application's requirements.

- Define the protocol stack
- Define a soft header examination sequence
- Configure the Policer sub block
- Configure frame distribution by defining how frames are assigned to particular frame queues
- Call hardware drivers to execute the current configuration
- Directly configure the FMan by executing on a target running embedded Linux (See FMC Tool - Runtime Environment Mode.)

- Indirectly configure the FMan by executing on a Linux or Windows host by generating C source code that configures the FMan. You include this code in your application. (See FMC Tool - Host Mode.)

8.2.6.3 FMC Tool Components and Packaging

The FMC Tool package contains these files:

- Host version of FMC Tool for desktop versions of Linux and Windows
- FMC Tool application for embedded Linux
- NetPDL file containing a description of each standard network protocol that the FMan's Hard Parser supports. This file is named `hxs_pdl_v3.xml` and is in the directory `/etc/fmc/config/`.

> **NOTE**
>
> For detailed information on NetPDL, go to http://ftp.tuwien.ac.at/.vhost/analyzer.polito.it/30alpha/docs/dissectors/NetPDLCore.htm.
>
> For documentation of NXP's customized version of NetPDL, see NXP NetPDL Reference.

8.2.6.4 FMC Tool - Runtime Environment Mode

In runtime environment mode, you run the FMC Tool on a target board from the Linux command line, passing several configuration files as arguments. The tool then calls the FMan Driver API functions required to configure the FMan block as specified in the supplied files.

When used in this way, the FMC Tool *directly* configures the FMan. In more detail, the FMC Tool passes the configuration it finds in its input files (along with compiled Soft Parser firmware) to the FMan driver which, in turn, modifies the FMan's configuration.

Note: The FMC Tool does *not* support dynamic FMan configuration; you can use the tool to configure the FMan just once, typically at application initialization.

As Figure 109shows, you pass these files to the FMC Tool as command-line arguments:

- Standard Protocol file - Optional; included in LSDK; see Standard Protocol File for more information.
- Custom Protocol file - Optional; user written; see Custom Protocol File for more information.
- Policy file - Required; user written; see Policy file for more information.
- Configuration file - Required; user written; see Configuration File for more information.

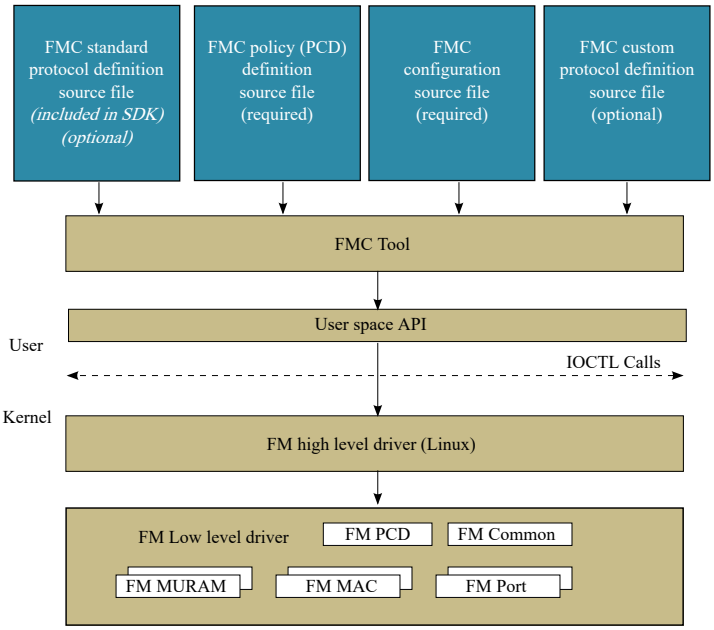

Figure 109. FMC Tool, Runtime Environment - Input XML Files / FMan Driver API Calls

See FMC Tool Command-Line Arguments for documentation of each of the tool's command-line arguments.

Note: You should configure the FMan before you enable your Rx/Tx ports to send/receive traffic. If you do not, the FMan uses the default Rx and default Tx frame queues.

8.2.6.5 FMC Tool - Host Mode

In addition to running on a target board, the FMC Tool can execute on a host computer running Linux or Windows. When run on a host, the FMC Tool accepts the same input files as in runtime environment mode.

However, in host mode, the FMC Tool generates C source code files. This code calls the FMan driver functions required to implement the rules defined in the supplied input files. You can compile and link these files to produce a standalone executable that you can run by itself, or you can add them to your application.

Note: The FMC Tool does not support dynamic FMan configuration; you can use the tool to configure the FMan just once, typically at application initialization.

As Figure 110 shows, in host mode, the FMC Tool generates C source code files from the input files listed below. (See Host Mode Output - C Source Code Files for more information.)

- Standard Protocol File - Optional; included in LSDK; see Standard Protocol File for more information.
- Custom Protocol File - Optional; user written; see Custom Protocol File for more information.
- Policy File - Required; user written; see Policy file for more information.
- Configuration File - Required; user written; see Configuration File for more information.

You pass these files to the FMC Tool as command-line arguments.

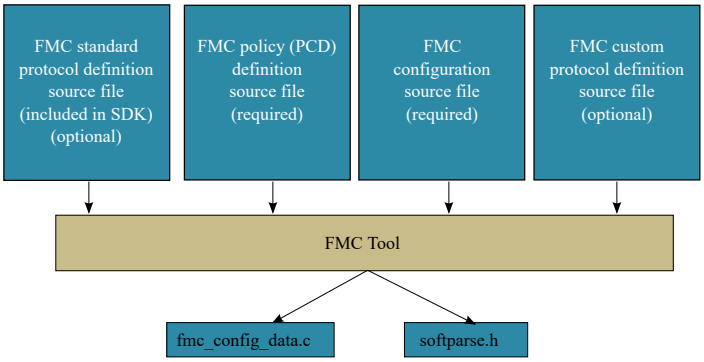

Figure 110. FMC Tool, Host Mode - Input XML Files / Generated C Source Code Files

See FMC Tool Command-Line Arguments for documentation of each of the tool's command-line arguments.

8.2.6.5.1 Host Mode Output - C Source Code Files

When run in host mode, the FMC Tool generates C language source code files that make calls to FMan Driver API functions. These calls implement the behavior defined in the Configuration file, Policy file, and (optionally) Custom Protocol file passed to the tool from the command line. Typically, you include these source files in your project, so they are compiled and linked into your application binary. As a result, when you run your application, it automatically sets up the FMan to behave as required.

In more detail:

- When you supply a Policy file and a Configuration file, the tool generates a single source code file named "fmc_config_data.c".
- When you supply a Policy file, a Configuration file, *and* a Custom Protocol file, the tool generates two source code files: "fmc_config_data.c" and "softparse.h".

Contents of fmc_config_data.c

- #include software parser configuration "softparse.h" at the top of the file
- Initialization of FMC model structure 'fmc_model_t' with configuration data - This structure represents the data model for FMan hardware configuration according to input files

Using fmc_config_data.c

- FMC model structure must be used together with FMC model definition and FMC executer: 'fmc.h' and 'fmc_exec.c' files - These file are available in FMC source files location
- FMC model definition contains 'fmc_model' structure definition - This structure represents the FMC configuration model
- FMC executer contains 'fmc_execute' routine - This function configures the FMan hardware to behave as specified in the input files

Usage options:

- Compile and link these files together ('fmc_config_data.c', 'fmc.h', 'fmc_exec.c') and generate a standalone binary and run this binary to configure the FMan - In this case you must add a main() function that calls fmc_execute()
- Have your application call fmc_execute() - In this case you don't need to add a main() function

Contents of softparse.h

- Contains compiled firmware that controls the FMan sub blocks involved in parsing a custom protocol header
- Defines parameters such as code size, protocol to attach, and download base address

Using softparse.h - Automatically included in fmc_config.c if you pass the FMC Tool a Custom Protocol file

Note: You should configure the FMan before you enable your Rx/Tx ports to send/receive traffic. If you do not, the FMan uses the default Rx and default Tx frame queues.

8.2.6.6 FMC Tool Command-Line Arguments

The table below lists and describes the FMC Tool's command-line arguments.

Table 77. FMC Tool Command-Line Arguments

Command-Line Argument Syntax *(Both the verbose and abbreviated command forms are shown)*	Description
-d <pdl_file>, --pdl <pdl_file>	Path to and name of the Standard Protocol file. *(Optional)* You can use a full path or a relative path. See Standard Protocol File for more information.
-p <pcd_file>, --pcd <pcd_file>	Path to and name of a Policy file. *(Required unless '--sp_only' is used)* You can use a full path or a relative path. See Policy file for more information.
-c <data_file>, --config <data_file>	Path to and name of the Configuration file. *(Required unless '--sp_only' is used)* You can use a full path or a relative path. See Configuration File for more information.
-s <custom_protocol_file>, --custom_protocol <custom_protocol_file>	Path to and name of the Custom Protocol file. *(Optional unless the '--sp_only' flag is used, in which case, this Custom Protocol file name is required.)* You can use a full path or a relative path. See Custom Protocol File for more information.
-a, --apply	Apply the supplied configuration to the FMan rather than generating C source code. *(Optional; valid only when FMC Tool is executed in runtime environment)*
--sp_only	Perform Soft Parser processing only. When this argument is supplied, the FMC Tool compiles just the Custom Protocol file, generates the file softparse.h, and exits. The file softparse.h contains C source code and custom protocol offsets. The tool creates softparse.h in the path from which the FMC Tool was executed. *(Optional)*
-w	Do not report warnings. *(Optional)*
--version	Display version information, then exit.

Table continues on the next page...

Table 77. FMC Tool Command-Line Arguments (continued)

Command-Line Argument Syntax *(Both the verbose and abbreviated command forms are shown)*	Description
	(Optional)
-h, --help	Display usage information, then exit. *(Optional)*

8.2.6.7 The NetPDL and NetPCD XML Markup Languages

The Network Protocol Description Language (NetPDL) is an XML dialect that defines elements for describing protocols from OSI layer 2 to OSI layer 7. (For more information on NetPDL, see http://ftp.tuwien.ac.at/.vhost/analyzer.polito.it/30alpha/docs/dissectors/NetPDLCore.htm).

NXP uses NetPDL to define the standard protocols that are parsed by the FMan's Hard Parser. You cannot change these protocol descriptions. However, the SDK includes a Standard Protocol file that you can use as a reference.

In addition, you can use NetPDL (with slight semantic and syntactic differences) to define custom protocols that are parsed by the FMan's Soft Parser. This feature allows the FMan to handle any protocol that exists or that you define yourself.

Finally, NXP has extended NetPDL to create a language called NetPCD. You use the elements and attributes of NetPCD to define FMan parse, classify, police, and distribute behavior. The processing thus defined determines how frames move from block to block of the FMan.

The FMC Tool accepts files in NetPCD and NetPDL format as input.

8.2.6.8 Protocol files

For a protocol to be recognized by the FMC Tool, the protocol must be defined in one of two ways:

1. As a standard protocol within the Standard Protocol file (included in the SDK)
2. As a custom protocol within the Custom Protocol file.

Each file type is described in the sections that follow.

8.2.6.8.1 Standard Protocol File

The LSDK includes a file called the Standard Protocol file. This file contains NetPDL (Network Protocol Description Language) markup that defines the fields in each standard protocol header that the FMan's Hard Parser can handle. In addition, for each standard protocol, the file includes NetPDL statements that define actions for the Hard Parser to take upon encountering an inbound instance of this protocol.

The Standard Protocol file is for the FMan's internal use only; you must therefore not change it. However, to write a Custom Protocol file and/or a Policy file, you sometimes need information the Standard Protocol file contains, such as the names of fields in a protocol's header.

For this reason, the SDK includes a copy of the Standard Protocol file in this directory: /etc/fmc/config/hxs_pdl_v3.xml.

The general structure of an FMC Standard Protocol XML file is shown below.

```
<netpdl>
    <protocol> <!-- one or more -->

        <format> <!-- only one -->
            <fields> <!-- only one -->
                <field/> <!-- one or more -->
            </fields>
```

```
        </format>

        <execute-code>
        </execute-code>

        <encapsulation>
        </encapsulation>

        <visualization>
        </visualization>

    </protocol>
</netpdl>
```

See the Standard Protocol File - Excerpt topic to see a larger portion of the Standard Protocol file.

8.2.6.8.2 Custom Protocol File

The FMan's Hard Parser has built-in capability to handle a set of widely used, standard protocols, such as IPv4. The FMan also has a Soft Parser, which has the ability to process custom protocols.

Of course, for the Soft Parser to recognize a custom protocol, you must first provide a definition of this protocol. To do this, you create a Custom Protocol file, which consists of NetPDL markup that defines the fields in a custom protocol's header along with the actions you want the Soft Parser to take upon these fields. You then pass this file to the FMC Tool, which compiles it and passes the result to the FMan.

Note: Some elements in the NetPDL language are relevant only if used with a protocol analysis tool. The FMC Tool does *not* support these elements; instead, the tool supports only those elements that are applicable to the FMan block. Further, although it is based on NetPDL, the markup for a custom protocol does not strictly follow NetPDL rules. As a result, it is highly recommended that the you become familiar with the NXP NetPDL Reference topic, which fully documents the custom version of NetPDL used in custom protocol definitions.

See Custom Protocol File - GTP Protocol Example, for an example of a custom protocol definition file containing XML that defines the GPRS Tunneling Protocol (GTP).

Note: If your application does not use a custom protocol, you do not have to create a Custom Protocol file. Further, if your application uses *multiple* custom protocols, you can (and must) define them in a single Custom Protocol file; you can pass just one Custom Protocol file to the FMC Tool.

The general structure of a Custom Protocol file is shown below.

```
<netpdl> <!-- only one instance -->
   <protocol> <!-- one or more instances -->

      <format> <!-- only one instance -->
         <fields> <!-- only one instance -->
            <field/> <!-- one or more instances -->
         </fields>
      </format>

      <execute-code> <!-- zero or one instance -->
         <before> <!-- zero or one instance -->
         </before>

         <after> <!-- zero or one instance -->
         </after>
      </execute-code>

   </protocol>
</netpdl>
```

8.2.6.9 Policy file

The policy file defines how each inbound frame is parsed, classified, policed, and distributed by the various FMan sub blocks.

A policy file consists of NetPCD markup, where NetPCD is NXP's extension to NetPDL, an XML markup language for describing networking protocols. The elements and attributes of NetPCD let you define the parse, classification, policing, and distribution behavior your application requires. See NetPCD Reference for documentation of each NetPCD element and its attributes.

A Policy file can have these sections:

- Distribution (required) - Contains one or more distribution definitions, each of which:
  - Specifies the protocol(s) a frame must contain to match the distribution
  - Defines how to handle matching frames
- Policy - (required) - Contains one or more policy definitions, each of which:
  - Is associated with an FMan port
  - Contains a prioritized list of distributions
- Classification (optional) - Contains one or more classification blocks, each of which:
  - Defines key/value/action tuples, which the FMan's Controller sub block stores in a lookup table
  - Compares the specified fields in the current frame header to each value in this table and, upon a match, takes the specified action
- Policer (optional) - Contains up to 256 policer profiles, each of which can be used to:
  - Take action upon frames without regard to traffic flow rate
  - Take action upon frames based on the RFC-2698 two-rate, three-color policing scheme
  - Take action upon frames based on the RFC-4115 two-rate, three-color, differentiated services scheme

Note: When you run the FMC Tool, you must pass it a Policy file or the '--sp_only' flag. Otherwise, the program will exit and print an error message.

Figure 111. High-level Structure of a Policy File

```
<netpcd> <!-- only one instance -->
      <distribution> <!-- one or more instances -->
      </distribution>

      <policy> <!-- one or more instances -->
            <dist_order> <!-- one instance -->
                  <distributionref/> <!-- one or more instances -->
            </dist_order>
      </policy>

      <classification> <!-- optional, may have more than one instance -->
      </classification>

      <policer> <!-- optional, may have more than one instance -->
      </policer>
</netpcd>
```

8.2.6.9.1 Distribution Section

The Distribution *section* of the Policy file contains one or more 'distribution' *elements*. While 'distribution' elements can appear anywhere in the Policy file, they often appear at the top of the file.

Typically a 'distribution' contains child elements that define:

- Frame match rules
  - These rules define the conditions an inbound frame must meet to match (and therefore be handled by) this distribution
  - Use the 'protocols' element and/or the 'key' element to define match rules
- Frame handling rules
  - These rules determine what a distribution does with matching frames
  - Use the 'queue' and 'key' elements to hash frames, so they are evenly spread over a range of frame queues
  - Use the 'action' element to pass the frame to another element in the Policy file for further processing

Figure 112. Example Distribution Elements

```
<!-- distribution that matches all frames containing an IPv4 header -->
<!-- hashes these frames, so they are spread evenly over 32 frame queues -->
<distribution name="hash_ipv4_src_dst_dist0">
  <!-- frame match rule -->
  <key>
    <fieldref name="ipv4.src"/>
    <fieldref name="ipv4.dst"/>
  </key>

  <!-- frame handling rule -->
  <queue count="32" base="0x400"/>
</distribution>

<!-- distribution that matches frames containing Eth/VLAN/IPv4/UDP/GTP headers -->
<!-- passes all matching frames to the "dl_vlan_clasifif" classification element -->
<distribution name="dl_eth_vlan_ipv4_udp_gtp_dist">
  <!-- frame match rule -->
  <protocols>
    <protocolref name="ethernet"/>
    <protocolref name="vlan"/>
    <protocolref name="ipv4"/>
    <protocolref name="udp"/>
    <!--shim1 is custom protocol defined for GTP -->
    <protocolref name="shim1"/>
  </protocols>

  <!-- frame handling rule
  <action type="classification" name="dl_vlan_classif"/>
</distribution>
```

See The distribution element for complete documentation of this element.

Evenly Distributing Frames over a Range of Frame Queues

One frequent use of the 'distribution' element is to distribute frames evenly over a range of frame queues. If each available core is configured to pull from the same number of queues in the range, this even spreading balances the work each core must perform.

In this scenario, the FMan's KeyGen sub block uses values in the frame's header and in the child elements of the distribution as inputs to a hash algorithm that generates a 24-bit FQID within a range of FQIDs. The KeyGen sub block then places the frame on the frame queue identified by this FQID.

Here is the KeyGen's algorithm for generating a FQID:

1. Extract and concatenate the protocol header fields specified by the 'key' child element
2. Hash the resulting string to a 64-bit CRC

3. Shift the CRC right by the number of bits specified in the 'shift' attribute of the 'key' element to move the desired bits to the 24 least significant bit positions
4. Zero-extend the bit mask specified by the 'queue' child element ('count' attribute – 1) to 24 bits
5. Bitwise AND the result with the shifted CRC
6. Bitwise OR the result with the value specified by the 'combine' child element - repeat for each 'combine' element
7. Bitwise OR the result to the base FQID specified by the 'base' attribute of the 'queue' child element

Figure 113 shows the algorithm the KeyGen sub block uses to calculate a FQID.

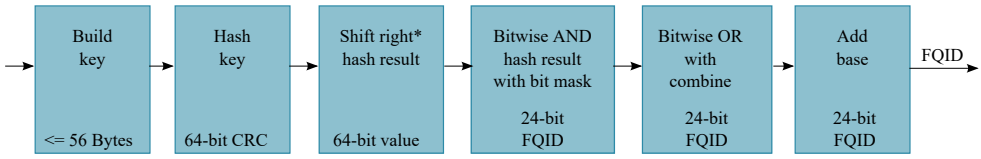

Figure 113. KeyGen Algorithm for FQID Calculation

* The 'key' element has an optional 'shift' attribute whose value defines the number of bits by which the hash result is right shifted. The default value for the shift attribute is zero.

Example KeyGen FQID Calculation

The series of figures that follow shows which child elements and attributes of a distribution block the KeyGen sub block uses in its FQID calculation.

Figure 114 shows where in the KeyGen sub block gets the inputs for the hash, shift right, bitwise AND, and "add base" parts of its FQID calculation.

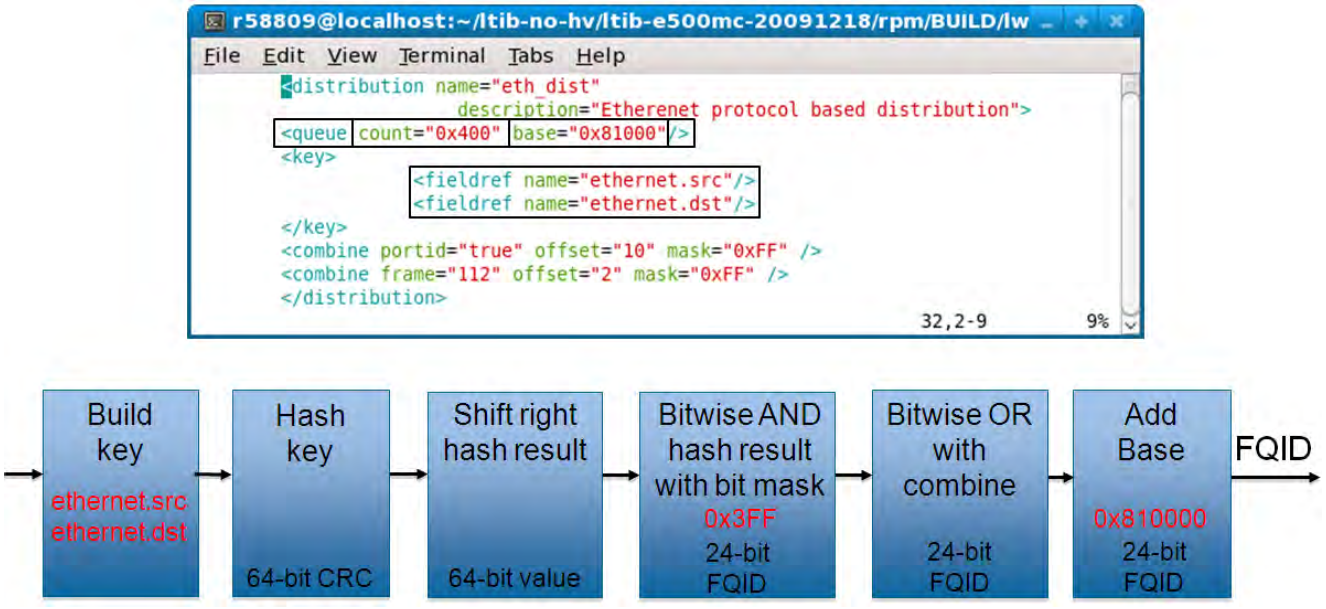

Figure 114. FQID Calculation - Elements/Attributes Used for Key, Bit Mask, and Base FQID

Figure 115shows a 'combine' element that includes a 'portid' attribute that is set to "true". In addition, the element's 'offset' attribute is "10", and its 'mask' is "0xFF". This markup instructs the KeyGen sub block to perform the "bitwise OR" part of the FQID calculation. In more detail, for this markup, the KeyGen does these things:

- Bitwise ANDs the 8-bit logical port ID (defined in the Configuration file) of the port on which the current frame arrived with the 8-bit mask in the 'combine' element.

- Bitwise ORs (inserts) the 8-bit result at the specified offset (10 bits) within the 24-bit FQID (where offset 0 signifies the FQID's most significant bit).

Note: Each FMan port can be assigned an 8-bit logical port ID by adding markup to the Configuration file. To do this, assign an 8-bit value to the 'portid' attribute of each 'port' element to which you want to assign a logical port ID. The Hard Parser puts this value (if defined) in the parse results array, where the a KeyGen sub block can get it.

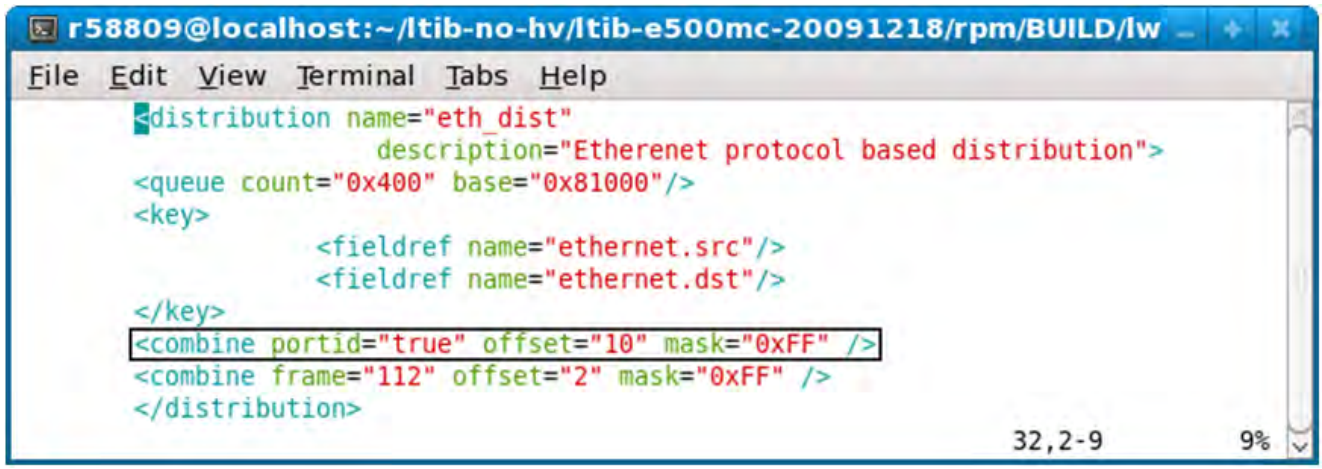

Figure 115. FQID Calculation - A 'combine' Element that Uses the 'portid' Attribute

Figure 116 shows a 'combine' element that includes a 'frame' attribute. This markup instructs the KeyGen sub block to:

- Get the 8 bits at offset 112 in the current frame header.
- Bitwise AND this value with the 8-bit mask (0xFF) specified in the 'combine' element
- Bitwise OR (insert) the 8-bit result at the specified offset within the 24-bit FQID (where offset 0 signifies the FQID's most significant bit).

Note: The value of the 'frame' attribute is an offset (in bits) from beginning of the current frame. The KeyGen sub block gets the byte at this offset for its FQID calculation. The value of 'frame' must be divisible by 8, so the bit it references is on a byte boundary.

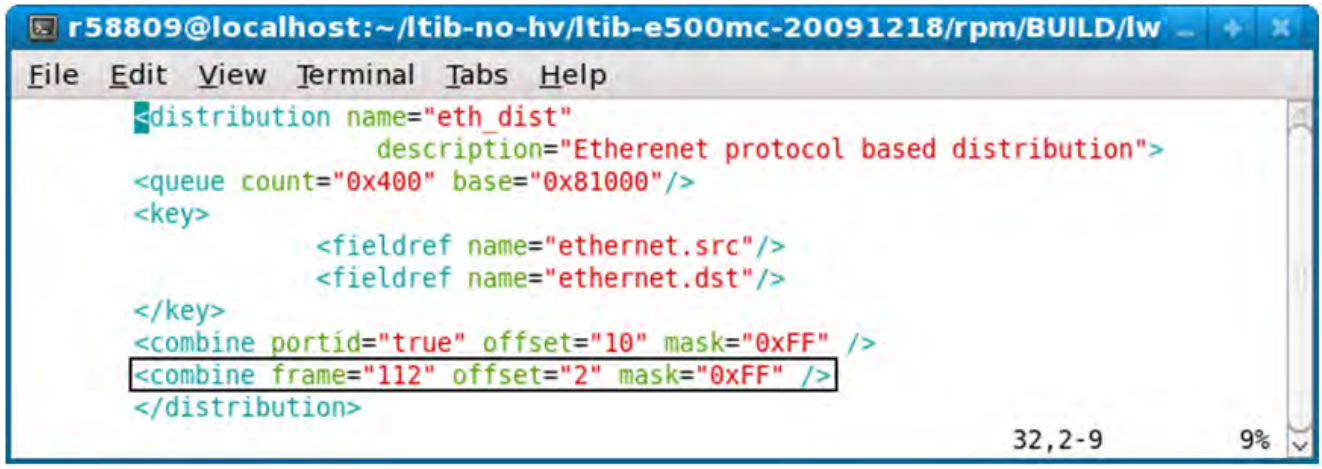

Figure 116. FQID Calculation - A 'combine' Element that Uses the 'frame' Attribute

Finally, Figure 117 shows where the KeyGen sub block plugs the values from each of the combine elements into the bitwise OR part of the FQID calculation.

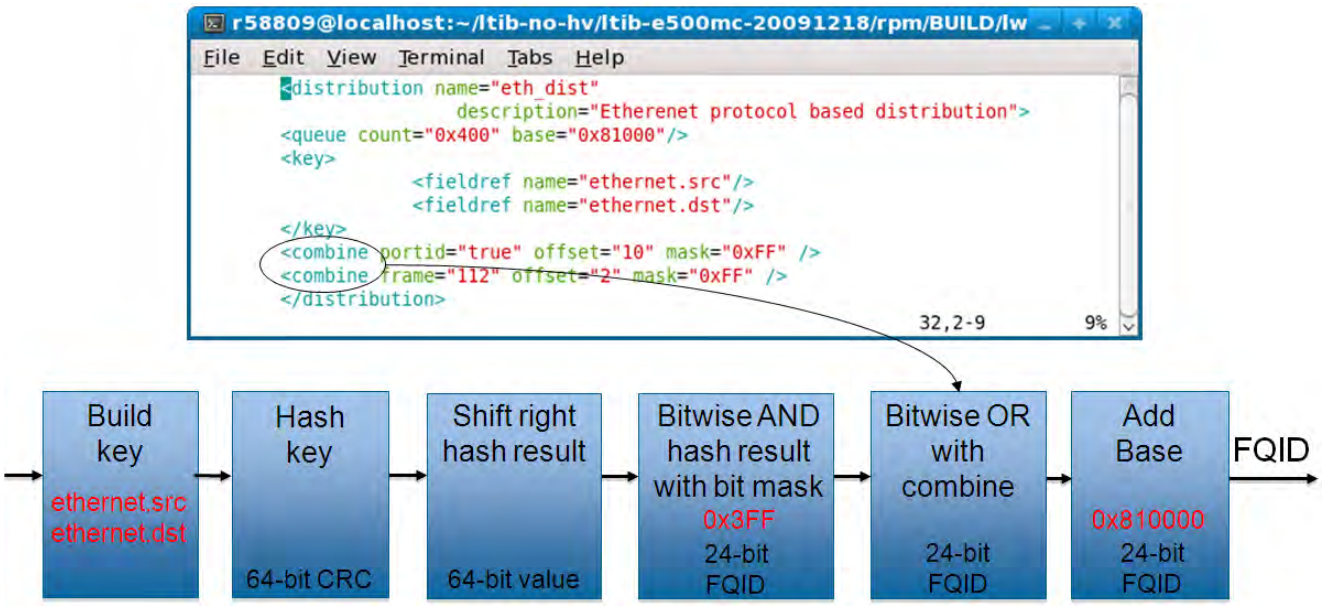

Figure 117. FQID Calculation - combine Elements Used in Bitwise OR

FQID Formula

```
FQID[0:23] = (Shifted Hash Key[0:23] & Hash Mask) |
             Data0[0:23] | Data1[0:23] | … | Data7[0:23] |
             FQID Base Address
```

In sum, use the child elements/attributes of the 'distribution' element to provide the values on the right side of the FQID equation.

8.2.6.9.2 Policy Section

The Policy *section* of the Policy *file* consists of one or more 'policy' *elements*. While 'policy' elements can appear anywhere in the Policy file, they typically follow the last 'distribution' element in the file.

Each 'policy' element defines a set of *candidate* distributions that the FMan can apply to inbound frames. The particular distribution the FMan applies to a given frame depends on these factors:

- The position of each distribution in the 'policy' element's distribution order list
- The definition of each of these distributions

Candidate distributions are listed in *priority* order. As a result, if two or more distributions in the list match the current inbound frame, the FMan applies the first matching distribution because this distribution has higher priority.

How does the FMan know which policy (that is, which prioritized list of distributions) to apply to the traffic received on a particular Ethernet port? The Configuration file provides the connection.

In a Configuration file, you must enter one 'port' element for each FMan port your application uses. Further, the port element has a required attribute - the 'policy' attribute - whose value must match the name of one of the policy elements in the Policy file, thereby defining the policy (that is, the ordered list of distributions) that the FMan will apply to all traffic received on a port. In sum, the value of a port element's policy attribute in the *Configuration* file ties the port identified by this element to a policy element in the *Policy* file.

In a Configuration file:

- A port can be assigned a single policy
- Multiple ports can be assigned the same policy
- A port can have just one active policy at a time

Typically, you assign one policy to each port your application uses.

Example 1 - Simple Use of the Policy Element

Configuration File

```
<!-- The port element assigns the dl_policy policy to the 10 Gbps port of FMan 0 -->
<!-- Policy dl_policy is defined in the Policy file - see next code snippet -->
<cfgdata>
  <config>
    <engine name="fm0">
      <port type="MAC" number="9" policy="dl_policy"/>
    </engine>
  </config>
</cfgdata>
```

Policy File

```
<!-- A policy element that defines how to apply two distributions -->
<!-- These distributions are defined elsewhere in the Policy file -->
<!-- This policy is assigned to an Ethernet port by the Configuration file above -->
<policy name="dl_policy">
      <dist_order>
            <distributionref name="dl_eth_vlan_ipv4_udp_gtp_dist"/>
            <distributionref name="garbage_dist"/>
      </dist_order>
</policy>
```

In the example above, the Configuration file assigns the policy named 'dl_policy' to the 10 Gbps port of a LS1043A chip's first FMan (fm0). As a result, the FMan first tries to match each frame that arrives on this port to the 'dl_eth_vlan_ipv4_udp_gtp_dist' distribution since it appears first in the 'policy' element's distribution order list. Whether the frame matches depends on the definition of the 'dl_eth_vlan_ipv4_udp_gtp_dist' distribution, which is not shown. If the frame matches, it is handled according to the rules this distribution defines. If the frame does not match, the FMan next compares it to the 'garbage_dist' distribution since it appears second in the distribution order list. Because of this distribution's definition (also not shown), it matches all frames, thereby guaranteeing that every frame is handled in one way or the other.

See The policy element for complete documentation of this element.

Example 2 - More Complex Use of the Policy Element

Figure 118 shows the Policy file from the pktwire application. This application requires a more complex use of policies and distributions than shown in the previous example.

This Policy file defines ten 'policy' elements - pktwr_policy_0, pktwr_policy_1, … pktwr_policy_9 - some of which are shown in the figure.

A Configuration file (not shown) assigns each of these policies to one of an SoC's ten FMan ports - five on the first FMan (fm0) and five on the second FMan (fm1).

Note: Not all QorIQ devices have two FMans. Nor does every FMan have five Ethernet ports. See the reference manual for your QorIQ device to determine the number of FMans and FMan ports this device supports.

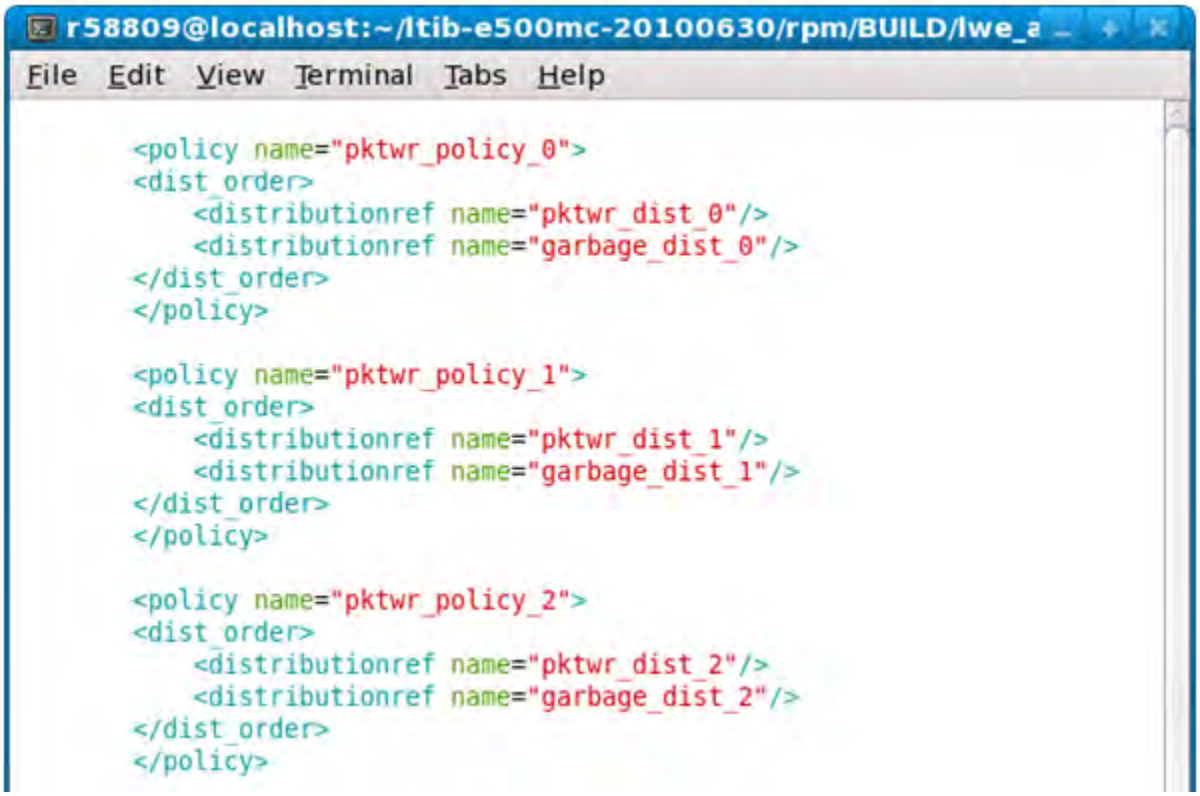

Figure 118. More Complex Policy File - 1

The Policy file also defines ten distributions - pktwr_dist_0, pktwr_dist_1, … pktwr_dist_9 - some of which are shown in Figure 119.

As mentioned above, each of these distributions is assigned to a policy which, in turn, is assigned to a port. A frame "matches" the distribution assigned to the port on which the frame arrived if its header contains both the ipv4.src and ipv4.dst fields.

For each frame that matches, the KeyGen sub block computes a hash result using the concatenation of the ipv4.src and ipv4.dist fields as the hash key. The KeyGen sub block then uses the hash result to compute a FQID. (See the Distribution Section topic for detailed coverage of the KeyGen's FQID calculation algorithm.)

The resulting FQID is in the range specified by the 'queue' element. For example, for distribution “pktwr_dist_0”, the resulting FQID will be in range 0x2800 – 0x281F.

r58809@localhost:~/ltib-e500mc-20100630/rpm/BUILD/lwe_a

File Edit View Terminal Tabs Help

```
<netpcd xmlns:xsi="http://www.w3.org/2001/XMLSchema-instance"
        xsi:noNamespaceSchemaLocation="xmlProject/pcd.xsd" name="example"
        description="PktWire configuration">

        <distribution name="pktwr_dist_0">
        <queue count="32" base="0x2800"/>
        <key>
                    <fieldref name="ipv4.src"/>
                    <fieldref name="ipv4.dst"/>
            </key>
        </distribution>

        <distribution name="pktwr_dist_1">
        <queue count="32" base="0x400"/>
        <key>
                    <fieldref name="ipv4.src"/>
                    <fieldref name="ipv4.dst"/>
            </key>
        </distribution>

        <distribution name="pktwr_dist_2">
        <queue count="32" base="0x800"/>
        <key>
                    <fieldref name="ipv4.src"/>
                    <fieldref name="ipv4.dst"/>
            </key>
        </distribution>
```

Figure 119. More Complex Policy File - 2

The Policy file also defines ten distributions - garbage_dist_0, garbage_dist_1, … garbage_dist_9 - some of which are shown in Figure 120.

Note that these distributions do not have a 'key' element. As a result, all frames “match” these distributions. For 'garbage_dist_0', the resulting FQID is always 0xb1 since the queue element specifies just one frame queue and the base FQID value is 0xb1.

Figure 120. More Complex Policy File - 3

Let's say that an FMan port is tied to policy 'pktwr_policy_1' - highlighted in Figure 121.

This policy instructs the FMan to first attempt to distribute frames arriving on this port using the 'pktwr_dist_1' distribution. If the current frame does not include the ipv4.src and ipv4.dst fields, the policy instructs the FMan to try the next distribution in the policy's distribution order list.

In this example, the next distribution is "garbage_dist_1" which, due to the absence of a 'key' element, matches *all* frames and enqueues them to the single frame queue defined by the 'count' and 'base' attributes of its queue element.

Note: It is common for the last distribution in a distribution order list to be a "catch all", like the default case in a C switch statement; however, this is not a requirement.

Figure 121. More Complex Policy File - 4

8.2.6.9.3 Classification Section

The Classification section of the Policy file is optional. Use it to specify exact match frame classification.

A classification specifies the action to perform on a frame when the values of the specified fields in a frame's protocol header match a predefined value. You can specify as many predefined value/action pairs as desired, as well as a default action.

A classification starts with a 'classification' element, which is a container for these child elements:

- A 'key' element that defines the header fields (in protocol.field form) to use in the exact match operation
- One or more 'entry' elements, each of which defines a value to which the specified fields are compared and a 'queue' and/or 'action' element that defines what to do with the frame upon a match
- An optional 'action' element that defines the default action to take if none of the exact match conditions is met

The FMC Tool uses the information in these child elements to populate the FMan Controller's rules table. At runtime, the Controller uses this information to extract the specified fields from the specified protocol header, compare these fields to the specified values and, upon a match, take the specified action.

See The classification element for complete documentation of this element.

Example

The example below shows a Policy file containing a 'classification' element.

The 'policy' element named 'policy_0' lists two distributions to try, 'udp_dist' and 'non_udp_dist'.

Note: For a classification block to be applied to a frame, the frame must first match a distribution that transfers control to this classification via an 'action' element. In other words, the "source engine" of the Classifier is always a 'distribution' element.

The 'udp_classif' classification element specifies an exact-match lookup on the ipv4.dst field. If this field's value is:

- 0xC0A81402, the frame is placed on the queue whose FQID is 0x200
- 0xC0A81404, the frame is placed on the queue whose FQID is 0x400
- 0xC0A81406, the frame is placed on the queue whose FQID is 0x600
- 0xC0A81408, the frame is placed on the queue whose FQID is 0x800

Otherwise, the 'action' element passes the frame to the 'unknown_dist' distribution for handling.

```
description="Course Classification configuration">
<policy name="policy_0">
        <dist_order>
                <distributionref name="udp_dist"/>
                <distributionref name="non_udp_dist"/>
        </dist_order>
</policy>

<distribution name="udp_dist">
    <protocols>
        <protocolref name="udp"/>
    </protocols>
    <action type="classified" name="udp_classif"/>
</distribution>

<classification name="udp_classif">
    <key>
                <fieldref name="ipv4.dst">
    </key>
    <entry>
                <data>0xC0A81402</data>
                <queue base="0x200"/>
    </entry>
    <entry>
                <data>0xC0A81404</data>
                <queue base="0x400"/>
    </entry>
    <entry>
                <data>0xC0A81406</data>
                <queue base="0x600"/>
    </entry>
    <entry>
                <data>0xC0A81408</data>
                <queue base="0x800"/>
    </entry>
    <action type="distribution" condition="on-miss" name="unknown_dist"/>
<classification>
"cc_policy.xml" 108 lines --61%--
```

8.2.6.9.4 Policer Section

The Policer section of the Policy file is optional.

If used, the section consists of up to 256 policer profiles. Each profile starts with a 'policer' element, which is a container for various child elements with which you implement a particular policing behavior.

Each profile works in one of these modes:

- Pass-through – Policer performs no traffic metering
- RFC-2698 - Policer employs a two-rate, three-color marker scheme
- RFC-4115 - Policer employs a differentiated service, two-rate, three-color marker scheme that efficiently handles in-profile traffic

Each of these modes can be configured to be color-aware or color-blind.

For RFC-2698 and RFC-4115 modes, you must specify these values:

- unit, the unit to be used for the following numeric parameters. Valid values for unit are "packet" and "byte."
- CIR, Committed Information Rate[11]
- CBS, Committed Burst Size[12]
- PIR, Peak Information Rate[13]
- PBS, Peak Burst Size[14]

In all three modes, you can specify the next invoked action (NIA) for each color result (drop the frame, proceed to the specified distribution, etc.)

Example 1 - Policer Markup for RFC2698 Mode

```
<policer name="policer2">
  <algorithm>rfc2698</algorithm>

  <color_mode>color_aware</color_mode>

  <CIR>12000</CIR>
  <EIR>34000</EIR>
  <CBS>56000</CBS>
  <EBS>78000</EBS>

  <unit>byte</unit>

  <action condition="on-green"  type="distribution" name="green_dist"/>
  <action condition="on-yellow" type="distribution" name="yellow_dist"/>
  <action condition="on-red"    type="drop"/>
</policer>
```

Example 2 - Policer Markup for Pass-through Mode

```
<policer name="vlan_congestion_control_green">
  <algorithm>pass_through</algorithm>

  <color_mode>color_blind</color_mode>

  <default_color>green</default_color>

  <action condition="on-green" type="distribution name="default_dist"/>
</policer>

<policer name="vlan_congestion_control_yellow">
  <algorithm>pass_through</algorithm>

  <color_mode>color_blind</color_mode>

  <default_color>yellow</default_color>

  <action condition="on-yellow" type="drop"/>
</policer>
```

[11] If "unit" attribute is "packet" specify CIR and PIR in packets/second. If "unit" attribute is "byte" specify CIR and PIR in Kbits/second
[12] If "unit" attribute is "packet" specify CBS and PBS in packets. If "unit" attribute is "byte" specify CBS and PBS in bytes.
[13] If "unit" attribute is "packet" specify CIR and PIR in packets/second. If "unit" attribute is "byte" specify CIR and PIR in Kbits/second
[14] If "unit" attribute is "packet" specify CBS and PBS in packets. If "unit" attribute is "byte" specify CBS and PBS in bytes.

```
<policer name="vlan_congestion_control_red">
  <algorithm>pass_through</algorithm>

  <color_mode>color_blind</color_mode>

  <default_color>red</default_color>

  <action condition="on-red" type="drop"/>
</policer>
```

8.2.6.10 Configuration File

The Configuration file contains markup that defines the FMan instances (for devices with more than one FMan) and ports that are being used.

In addition, the Configuration file "connects" each port to the parse, classification, policing, and distribution rules defined in the Policy file. How? Each 'port' element in the Configuration file has a 'policy' attribute whose value must be the name of one of the 'policy' elements in the Policy file. This information tells the FMan which distributions to compare to each frame received on a given port.

Figure 122 shows the Configuration file's elements, attributes, and element hierarchy.

Note these element and attribute requirements:

- Valid engine names are "fm0" or "fm1"
- Valid values for the port type attribute are:
  - "MAC" (1/10 Gbps Ethernet port)
- Port numbering corresponds to hardware port number (as in dts) for each port.
- The value of the 'policy' attribute of a 'port' element must match the name of a 'policy' element in the Policy file.
- portid attribute (optional) - One byte numeric value that is attached to the port and that can be used in the 'distribution' and 'combine' elements of the Policy file.

The Configuration file's general structure is shown below.

Figure 122 shows an example configuration file. It uses the optional 'portid' attribute for the 1 Gbps ports.

Figure 122. Example Configuration File

```
<cfgdata>
  <config>
    <engine name="fm0">
      <port type="MAC" number="1" policy="ipv4_policy"/>
      <port type="MAC" number="2" policy="ipv4_policy" portid="0x96"/>
      <port type="MAC" number="3" policy="ipv4_policy" portid="0x97"/>
      <port type="MAC" number="4" policy="ipv4_policy" portid="0x97"/>
    </engine>
  </config>
</cfgdata>
```

8.2.6.11 NXP NetPDL Reference

The FMan's Soft Parser can process non-standard, custom protocols that you define. To define a custom protocol, you enter NetPDL (Network Protocol Description Language) markup into a file called the Custom Protocol file. This markup defines each

field in the custom protocol's header, as well as actions for the Soft Parser to take both before and after the custom header is loaded into the frame window.

Note: Although the markup used to define a custom protocol is based on NetPDL, this markup does not follow NetPDL rules strictly. As a result, you cannot rely on non-NXP documentation of NetPDL as you write your Custom Protocol file. Only the information in this appendix accurately explains how to write the NetPDL that goes in a Custom Protocol file.

You pass the name of the Custom Protocol file to the FMC Tool from the command line. The tool, in turn, passes the information in this file (directly or indirectly) to the FMan's Soft Parser.

8.2.6.11.1 Basic XML Rules

The Custom Protocol XML file follows standard XML rules.

The file is composed of several elements. Each element begins with a start tag and can contain attributes and/or child elements. If the element contains child elements, it must have a matching end tag. An element without child elements or text must end with a forward slash (/).

Note that element and attribute names are case sensitive. In the Custom Protocol file, all element and attribute names use only lower case alphabetics.

Comments always begin with "<!--" and end with "-->"

Example

```
<one-element attribute1="value"> <!-- this is a comment -->
  <child-element myattribute="4"/>
</one-element>
<another-element attribute2="value2"/>
```

8.2.6.11.2 The netpdl Element

The Custom Protocol file always begins with the <netpdl> root element. As a result, the end netpdl tag must appear at the end of the file.

Attributes: No required attributes

Child Elements: protocol

Example

```
<netpdl>
...
</netpdl>
```

8.2.6.11.3 The protocol element

Use the 'protocol' element to bracket the definition of each custom protocol in the Custom Protocol file. The 'protocol' element is a container for all the other elements required to define a custom protocol.

Attributes

name - (required) alphanumeric string; defines the unique name of the custom protocol.

longname - (optional) alphanumeric string; provides a user-friendly name for the protocol.

prevproto - (required) alphanumeric string. This attribute defines the previous protocol, that is, the protocol whose header precedes the custom protocol's header.

Table 78 lists the values that you can assign to the 'prevproto' attribute.

Table 78. Valid values for the prevproto attribute

Protocol	Layer
ethernet	2
llc_snap	2
vlan	2
pppoe	2
mpls	2
ipv4	3
ipv6	3
gre	3
minencap	3
otherl3 **NOTE** The Custom Protocol file's NetPDL XML has a somewhat different structure and behavior if either 'otherl3' or 'otherl4' is the previous protocol. See Effect of Setting prevproto Attribute to otherl3 or otherl4.	3
tcp	4
udp	4
ipsec_ah	4
ipsec_esp	4
sctp	4
dccp	4
otherl4 [1]	4

Each time the frame window contains a header for a protocol specified in the 'prevproto' attribute of one of the 'protocol' elements in the Custom Protocol file, the Hard Parser transfers control to the Soft Parser.

The Soft Parser then executes the 'before' element code of the 'protocol' element whose prevproto attribute matches the current protocol. As long as the 'before' element code is executing, the previous protocol's header remains in the frame window. As a result, the 'before' element code can reference the fields in the previous protocol header.

Typically, the 'before' element includes code that determines whether the next protocol header is an instance of the custom protocol defined by this protocol element. If it is not, the 'before' code instructs the Soft Parser to return to the Hard Parser; if it is, the Soft Parser continues to execute the 'before' code.

When the Soft Parser finishes executing the 'before' code (and if it does not return control to the Hard Parser), the Soft Parser advances the frame window to the custom protocol header and starts executing the 'after' element code (if any has been defined). Therefore, the code in the 'after' element can reference the fields in the custom protocol header.

Child Elements: format, execute-code

Example

```
<protocol name="gtpu" longname="GTP-U" prevproto="udp">
  ...
</protocol>

<protocol name="tcpExt" longname="tcp extension" prevproto="cp">
  ...
</protocol>
```

8.2.6.11.3.1 Effect of Setting prevproto Attribute to otherl3 or otherl4

When the 'prevproto' attribute of the 'protocol' element is set to otherl3 (for other layer 3 protocol) or otherl4 (for other layer 4 protocol), the first byte of the previous protocol header and the first byte of the custom protocol header are at the position in the frame window. Because they are not real protocols, neither otherl3 nor otherl4 has a real protocol header with a defined size and defined fields; these "protocols" are used just to provide the Soft Parser with an entry point (or a termination point) within the frame window. In effect, the size of the otherl3 and otherl4 "headers" is zero. Consequently, these "headers" have the same start offset in the frame window as does the custom protocol's header.

Note: Because the otherl3 and otherl4 protocols do not have real headers, they provide nothing for the Soft Parser to parse. As a result, you cannot use the 'before' element when either of these protocols is assigned to the 'prevproto' attribute. You can only use the 'after' element in these cases.

8.2.6.11.4 The format element

Use the 'format' element to bracket the definition of the structure of a custom protocol header. The 'format' element is a container for the 'fields' element which, in turn, is a container for the 'field' element. The 'field' element lets you define each field in a custom protocol's header.

Attributes: none

Child Elements: fields

8.2.6.11.4.1 The fields Element

Use the 'fields' element to define the structure of a custom protocol's header. This element is a container for the 'field' element, which lets you define each field in a custom protocol header.

Attributes: none

Child Elements: field

8.2.6.11.4.2 The field Element

Use the 'field' element to define one of the fields in a custom protocol header.

Attributes

type - (required) string; Defines the field size as either "fixed" for a byte-length field or "bit" for a bit-length field.

size - (required) integer; Defines the size of the field in bytes.

name - (required) string; Defines the unique name for the field.

longname - (optional) string; Defines the name of the field for display purposes.

mask - (required only for bit field) integer; Defines the specific bits in the current bytes which belong to this field.

The field elements appear one after the other to define a custom protocol's header frame. The first field begins in the first byte of the custom protocol's frame header and its size is determined by the size attribute. The following fields conform to the following rules:

- A fixed field or a field following a fixed field begins in the next byte, which is the previous field's offset + the previous field's size.
- A bit field following a bit field begins in the next byte only if the last bit in the previous field's mask is 1.
- If two fields share the same offset (which is possible only when both fields are bit fields and the mask of the first field does not end with 1), they should have the same value for their size attributes.

Example

```
<format>
  <fields>
    <field type="bit"   name="flags"   mask="0xE0" size="1"/>
    <field type="bit"   name="pt"      mask="0x80" size="1"/>
    <field type="bit"   name="version" mask="0x07" size="1"/>
    <field type="fixed" name="mtype"               size="1"/>
    <field type="fixed" name="length"              size="2"/>
  </fields>
</format>

<format>
  <fields>
    <field type="bit"   name="version" mask="0xE0" size="1"/>
    <field type="bit"   name="pt"      mask="0x10" size="1"/>
    <field type="bit"   name="flags"   mask="0x07" size="1"/>
    <field type="bit"   name="flags1"  mask="0x01" size="1"/>
    <field type="bit"   name="flags2"  mask="0x10" size="1"/>
    <field type="bit"   name="flags3"  mask="0x02" size="1"/>
    <field type="fixed" name="mtype"   size="1" longname="message type"/>
    <field type="fixed" name="length"  size="2"/>
  </fields>
</format>
```

The fields will, thus, be stored in the following bit offsets in the custom protocol header:

version: 0-2 pt: 3-3 flags: 5-7 flags1: 15-15 flags2: 19-19 flags3: 22-22 mtype: 24-31 length: 32-47

8.2.6.11.5 The execute-code element

Use the 'execute-code' element to define all code that should be executed for a custom protocol once the parser reaches the specified previous protocol header.

This element contains two child elements, 'before' and 'after'. At least one of these child elements must be defined. If both are defined, the 'before' element must appear before the 'after' element.

Attributes: none

Child Elements: before, after

Example

```
<execute-code>
  <before>
    ...
  </before>

  <after headersize="8">
```

```
  </after>
</execute-code>
```

8.2.6.11.5.1 The before Element

The Soft Parser executes the code in the 'before' element before it moves the frame window from the previous protocol header to the custom protocol header. Therefore, use the 'before' element to specify logic that requires access to fields in the previous protocol header. This code is often used to determine whether the next protocol header is an instance of the custom protocol this protocol block defines. If it is not, the 'before' block instructs the Soft Parser to return control to the Hard Parser; if it is, the Soft Parser continues processing.

While the code in the 'before' element is analyzed, the frame window points to the previous protocol header. Therefore, the frame window variable ($FW) references the fields in the previous protocol header and the header size variable ($headerSize) variable returns the size of the previous protocol's header.

Once the it reaches the end of the 'before' element, the Soft Parser moves the frame window to the custom protocol header. If no 'after' element has been defined, the Soft Parser then returns to the Hard Parser.

The 'before' element can only appear once in the 'execute-code' element and, if an 'after' element has been defined, the 'before' element must appear before the 'after' element.

Attributes

confirm - (optional) string; Valid values are "yes" and "no". The default value is "no" if an 'after' element has been defined. Otherwise, the default value is "yes". If confirm="yes", the Soft Parser confirms the presence of the 'prevproto' header by bitwise OR'ing the previous protocol's line-up enable confirmation mask with the current line-up confirmation vector (LCV) value.

confirmcustom - (optional) string; Valid values are "shim1", "shim2", and "no". The default value is "no". If 'confirmcustom' is set (!="no"), the Soft Parser confirms the presence of the custom protocol header by bitwise OR'ing the custom protocol's mask with the current line-up confirmation vector (LCV) value. The custom protocol can set one of the last two bits in the LCV. If "shim1" is selected, the least significant bit is set; if "shim2" is selected, the second least significant bit is set.

Child Elements: if, switch, assign, action

Note: When the previous protocol is 'otherl3' or 'otherl4', the previous protocol and the custom protocol are treated as if they are the same and each begins at the same offset within the frame window. Therefore, the 'before' element cannot be used when the 'prevproto' attribute is 'otherl3' or 'otherl4'; only an 'after' element be used when the the 'prevproto' attribute is 'otherl3' or 'otherl4'. See Effect of Setting prevproto Attribute to otherl3 or otherl4 for more information.

8.2.6.11.5.2 The after Element

The 'after' element contains code which should be executed when a frame from the current custom protocol has been encountered. In contrast to the 'before' element, in the 'after' section, it is possible to access fields from the current protocol but not from the previous protocol. In the 'after' element the frame window variable ($FW) manipulates the current custom protocol header and the header size variable ($headerSize) returns the size of the current custom protocol header.

At the end of the 'after' element, the frame window jumps to the end of the custom protocol's header and control returns to the Hard Parser.

The 'after' element can appear only once in an 'execute-code' element and if a 'before' element has been defined, it must appear before the 'after' element.

Attributes

confirm - (optional) string; Valid values are "yes" and "no". The default value is "yes". If confirm ="yes", the Soft Parser confirms the existence of the previous protocol header by bitwise OR'ing the previous protocol's line-up enable confirmation mask with the current line-up confirmation vector (LCV) value.

confirmcustom - (optional) string; Valid values are "shim1", "shim2", and "no". The default value is "no". If 'confirmcustom' is set (!="no"), the Soft Parser confirms the presence of the custom protocol header by bitwise OR'ing the custom protocol's mask with

the current line-up confirmation vector (LCV) value. The custom protocol can set one of the two last bits in the LCV. If "shim1" is selected, the least significant bit is set; if "shim2" is selected, the second least significant bit is set.

headerSize - (optional) integer; Possible values: arithmetic expression. (See Arithmetic Expressions) The default value is calculated using the fields contained by the 'format' element. You can specify the custom protocol's header size with this attribute. This information is needed so the parser returns to the right position following the custom protocol header. If header size is not specified, the FMC Tool assumes that the fields defined inside the 'format' element are the only fields in the custom protocol header and calculates the header size using these fields. The $headerSize variable in the 'after' element returns the value defined in this attribute (or the value calculated by default if the header attribute is not defined).

Child Elements: if, switch, assign, action

Example

```
<protocol name="gtp" prevproto="udp">
  <format>
    <fields>
      <field type="bit" name="version" mask="0xE0" size="1"/>
    </fields>
  </format>

  <execute-code>
    <before confirm="no">
      <assign-variable name="$GPR1" value="udp.dport"/>
      <!-- Note that this is ILLEGAL: <assign-variable name="GPR1" value="version" -->
      <assign-variable name="$shimr" value="$headerSize"/>
      <!-- shimresult now holds udp's header size -->
    </before>

    <after headersize="4" confirmcustom="shim1">
      <!-- Note that this is ILLEGAL: <assign-variable name="$GPR1" value="udp.dport"> -->
      <assign-variable name="$GPR1" value="version"/>
      <assign-variable name="$shimr" value="$headerSize"/>
      <!-- shimresult now equals 4 -->
    </after>
  </execute-code>
</protocol>
```

8.2.6.11.5.3 Child Elements of the before and after Elements

8.2.6.11.5.3.1 The assign-variable Element

The 'assign-variable' element assigns an expression to a variable.

Attributes

name - (required) string; The name of the variable to which a value will be assigned. Valid values: Variables contained in the result array.

value - (required) integer; The expression assigned to the variable. Valid values: arithmetic expressions.

Child Elements: none

Example

```
<assign-variable name="$shimoffset_2" value="$shimoffset_1+12"/>
```

8.2.6.11.5.3.2 The if Element

This element tests the specified condition. If the condition is true, control transfers to the 'if-true' element; if the condition is false, control transfers to the 'if-false' element (if one is defined).

Attributes

expr - (required) string; Defines the condition to be checked before selecting the code block to execute. Valid values: logical expressions. (See Logical Expressions for more information.)

Child Elements: if-true (required), if-false

Example

```
<if expr="$shimoffset_1==1">
  <if-true>
    ...
  </if-true>
  <if-false>
    ...
  </if-false>
</if>
```

8.2.6.11.5.3.2.1 The if-true Element

This element defines code to execute if the expression defined in the parent 'if' element is true.

Attributes: none

Child Elements: if, switch, assign, action (the same child elements as for the 'before' and 'after' elements)

Example

```
<if expr="$shimoffset_1==1">
  <if-true>
    ...
  </if-true>
  <if-false>
    ...
  </if-false>
</if>
```

8.2.6.11.5.3.2.2 The if-false Element

This element defines the code to execute if the expression defined in the parent 'if' element is false.

Attributes: none

Child Elements: if, switch, assign, action (the same child elements as for the 'before' and 'after' elements)

Example

```
<if expr="$shimoffset_1==1">
  <if-true>
    ...
  </if-true>
  <if-false>
    ...
  </if-false>
</if>
```

8.2.6.11.5.3.3 The switch Element

This element defines an expression and a set of cases. Each case consists of a value (or set of values) and code to be executed if the value equals the switch expression. Each 'switch' element must have at least one 'case' child element.

Note: Only the code of the first case that matches the swith expression is executed. Any following cases are skipped. In C language terms, a break is automatically added after the code of each case.

Attributes

expr - (required) string; Defines the value being checked. Valid values: arithmetic expressions.

Child Elements: case, default

Example

```
<switch expr="$shimoffset_1+1">
  <case value="2">
    <assign-variable name="$GPR[1:1]" value="0"/>
  </case>

  <case value="3" maxvalue="4">
    <assign-variable name="$GPR[1:1]" value="1"/>
  </case>

  <default>
    <assign-variable name="$GPR[1:1]" value="2"/>
  </default>
</switch>
```

8.2.6.11.5.3.3.1 The case Element

This element matches a value or range of values against the switch expression.

Attributes

value - (required) integer; If the value equals the switch expression and no earlier case has been matched, the code in the 'case' element is executed.

maxvalue - (optional) integer; If the switch expression is greater than or equal to the 'value' attribute and the expression is less than or equal to the 'maxvalue' attribute (and no earlier case has been matched), the code in the 'case' element is executed.

Child Elements: if, switch, assign, action (the same child elements as for the 'before' and 'after' elements)

Example

```
<switch expr="$shimoffset_1+1">
  <case value="2">
    <assign-variable name="$GPR[1:1]" value="0"/>
  </case>

  <case value="3" maxvalue="4">
    <assign-variable name="$GPR[1:1]" value="1"/>
  </case>

  <default>
    <assign-variable name="$GPR[1:1]" value="2"/>
  </default>
</switch>
```

8.2.6.11.5.3.3.2 The default Element

The 'default' element contains code that is executed if the expression in the 'switch' element is not matched by any of the candidate cases.

Attributes: none

Child Elements: if, switch, assign, action (the same child elements as for the 'before' and 'after' elements)

Example

```
<switch expr="$shimoffset_1+1">
  <case value="2">
    <assign-variable name="$GPR[1:1]" value="0"/>
  </case>

  <case value="3" maxvalue="4">
    <assign-variable name="$GPR[1:1]" value="1"/>
  </case>

  <default>
    <assign-variable name="$GPR[1:1]" value="2"/>
  </default>
</switch>
```

8.2.6.11.5.3.4 The action Element (for use in a Custom Protocol file)

Use the 'action' element in a 'before' or 'after' block to terminate soft parsing, jump to the specified next protocol header, and continue hard parsing.

Note: This topic defines the 'action' element used in a Custom Protocol file. See The action element (for use in a policy file) for the definition of the 'action' element used in a Policy file.

Attributes

- type - (required) string; "exit" is the only valid value for the type attribute.
- advance - (optional) string; The 'advance' attribute controls whether the Soft Parser moves the frame window to the next frame header. This attribute has different meanings in the 'before' and 'after' elements. In the 'before' element, the Soft Parser moves the frame window from the previous protocol header to the custom protocol header. In the 'after' element, the Soft Parser moves the frame window from the custom protocol header to the specified next protocol header. The frame window is advanced according to the header size. The value of 'advance' must be 'yes' or 'no'. The default is 'yes' unless 'nextproto' is set to 'end_parse', 'return', or not set at all. In these cases, the default value is 'no'.
- confirm - (optional) string; If confirm="yes", the Soft Parser bitwise OR's the previous protocol's line-up enable confirmation mask with the current line-up confirmation vector (LCV) value. Valid values are "yes" and "no"; the default value is "yes".
- confirmcustom - (optional) string; Valid values are "shim1", "shim2", or "no". The default value is "no". If confirmcustom is set to a value other than "no", the Soft Parser bitwise ORs the custom protocol's mask with the current line-up confirmation vector (LCV) value. The custom protocol can set one of the two last bits in the LCV. If shim1 is specified, the least significant bit is set; if shim2 is specified, the second least significant bit is set.
- nextproto - (optional); If used, this attribute must be one of the values from the table below:. The default value is 'return'.

Table 79. Parse Action for each Value of the nextproto Attribute

If nextproto is ...	The parse action is ...
ethernet	Jump to the Ethernet header and continue hard parsing
llc_snap	Jump to the LLC_SNAP header and continue hard parsing

Table continues on the next page...

Table 79. Parse Action for each Value of the nextproto Attribute (continued)

If nextproto is ...	The parse action is ...
vlan	Jump to the VLAN header and continue hard parsing
pppoe	Jump to the PPPoE header and continue hard parsing
mpls	Jump to the MPLS header and continue hard parsing
ipv4	Jump to the IPv4 header and continue hard parsing
ipv6	Jump to the IPV6 header and continue hard parsing
gre	Jump to the GRE header and continue hard parsing
minencap	Jump to the MinEncap header and continue hard parsing
otherl3	Jump to the otherl3 header and continue hard parsing
tcp	Jump to the TCP header and continue hard parsing
udp	Jump to the UDP header and continue hard parsing
ipsec_ah	Jump to the IPsec_ah header and continue hard parsing
ipsec_esp	Jump to the IPsec_esp header and continue hard parsing
sctp	Jump to the SCTP header and continue hard parsing
dccp	Jump to the DCCP header and continue hard parsing
otherl4	Jump to the otherl4 header and continue hard parsing
after_ethernet	Jump to the protocol that should follow the Ethernet header. The next protocol is determined from the value of the $nxtHdr variable. See Table 80to find the next protocol for each possible value of $nxtHdr. **Note:**The 'advance' attribute must be set to 'yes' if 'nextproto' is set to 'after_ethernet'.
after_ip	Jump to the protocol that should follow the IP header. The next protocol is determined from the value of the $nxtHdr variable. See table: **Next Protocol for each $nxtHdr Value if nextproto is 'after_ethernet'** to find the next protocol for each possible value of $nxtHdr. **Note:**The 'advance' attribute must be set to 'yes' if 'nextproto' is set to 'after_ip'.
return (default value)	Return to the Hard Parser without advancing the frame window. In this case, the Hard Parser starts parsing the frame header at the same position at which the Soft Parser began. The 'advance' attribute cannot be 'yes' when 'nextproto is set to return.
none/end_parse	Finish parsing the frame header; do not return to the Hard Parser.

Table 80. Next Protocol for each $nxtHdr Value if nextproto is 'after_ethernet'

If $nxtHdr is ...	The next protocol is ...
0x05DC or less	llc_snap
0x0800	ipv4
0x86DD	ipv6
0x8847, 0x8848	mpls
0x8100, 0x88A8, ConfigTPID1, ConfigTPID2	vlan
0x8864	pppoe
other value	otherl3

Table 81. Next Protocol for each $nxtHdr Value if nextproto is 'after_ip'

If $nxtHdr is ...	The next protocol is ...
4	ipv4
6	tcp
17	udp
33	dccp
41	ipv6
50, 51	ipsec
47	gre
55	minencap
132	sctp
other value	otherl4

Notes

- The frame window *must* be advanced when parsing jumps to the 'after_ethernet' or 'after_ip' protocols. Therefore, the 'advance' attribute cannot be set to 'no' in these cases.
- The frame window must *not* be advanced before a 'return' to the Hard Parser. Therefore, the 'advance' attribute cannot be set to 'yes' if nextproto is set to 'return' or not set at all (since 'return' is the default 'nextproto' value).

Child Elements: none

Example

```
<action type="exit"
        advance="yes"
        confirmcustom="shim2"
```

```
        confirm="no"
        nextproto="udp"/>
```

8.2.6.11.6 Expressions

Expressions are constructed of operands and operators. The simplest expression can contain just one operand. Most operators are dyadic and separate two operands (such as +, -) and some operators are monadic and operate on just the operand that follows them (such as 'not').

8.2.6.11.6.1 Operands

These are the supported types of operands: numbers, variables, fields, and expressions.

Note: The maximum size of an operand is 64 bits (8 bytes).

8.2.6.11.6.1.1 Numbers

Numbers can appear in decimal (no prefix), binary (prefixed by '0b'), or hexadecimal (prefixed by '0x') format.

All numbers are 64-bit unsigned integers. However, some operators only use the 32 LSB of a number.

Note: Immediate, primitive negative numbers are not supported. For example, the number -2 cannot appear in an expression. However, artificial negative values can be created using arithmetic expressions such as 1-3 (which returns 0xfffffffe).

8.2.6.11.6.1.2 Fields

Fields are defined with the 'format' element in a custom protocol header definition. There are two ways to access a field, by typing their name directly or by typing the name of the protocol header containing the field, followed by a period, followed by the name of the field.

In the 'before' element, it is only possible to access fields in the previous protocol header; in the 'after' element, it is only possible to access fields in the current custom protocol header.

Note: Fields longer than 8 bytes cannot be accessed individually. You can work around this limit by accessing the frame directly using the frame window ($FW) variable or by splitting the field into several shorter fields.

Example

```
<protocol name="gptu" prevproto="#ethernet">
  <format>
    <fields>
      <field type="fixed" name="example" size="2"/>
    </fields>
  </format>

  <execute-code>
    <before>
      <assign-variable name="$l2r" value="ethernet.type"/>
    </before>

    <after>
      <assign-variable name="$shimoffset_2" value="example"/>
    </after>
  </execute-code>
</protocol>
```

8.2.6.11.6.1.3 Variables

All variable names begin with the $ prefix and are case-sensitive. These variables are supported: frame window, header size, prevprotoOffset, parameter array, and result array variables.

8.2.6.11.6.1.3.1 Result Array Variables

Result array variables return values contained in the parse results array.

Syntax for accessing result array variables:

- $variableName - returns the entire variable
- $variableName[byteOffset:byteNumber] - Returns the byteNumber number of bytes in the variable starting from byteOffset. This access method is useful for accessing a subset of the bytes in the variable. In bytesNumber equals zero, the entire variable is returned, starting from byteOffset.

Example: The variable $actiondescriptor returns result array bytes 64-71. The expression $actiondescriptor[2:4] returns result array bytes 66-69 since 66 is at offset 2 of the actiondescriptor variable and the requested size is 4. The expression $actiondescriptor[3:0] returns result array bytes 67-71 since 67 is at offset 3 of the actiondescriptor variable and the requested size is 0, which means return the entire variable starting at the specified offset (3).

Other usage: In addition to expressions, result array variables can be used in the left side of 'assign-variable' elements to modify result array values.

Table 82shows the available result array variables .

Table 82. Result Array Variables

Variable Name	Result Array Bytes Referenced
gpr1	0-7
gpr2	8-15
logicalportid	16-16
shimr	17-17
l2r	18-19
l3r	20-21
l4r	22-22
classificationplanid	23-23
nxthdr	24-25
runningsum	26-27
flags	28-28
fragoffset	28-29
routtype	30-30
rhp	31-31
ipvalid	31-31
shimoffset_1	32-32

Table continues on the next page...

Table 82. Result Array Variables (continued)

Variable Name	Result Array Bytes Referenced
shimoffset_2	33-33
ip_pidoffset	34-34
ethoffset	35-35
llcs_napoffset	36-36
vlantcioffset_1	37-37
vlantcioffset_n	38-38
lastetypeoffset	39-39
pppoeoffset	40-40
mplsoffset_1	41-41
mplsoffset_n	42-42
ipoffset_1	43-43
ipoffset_n	44-44
minencapo	44-44
minencapoffset	44-44
greoffset	45-45
l4offset	46-46
nxthdroffset	47-47
framedescriptor1	48-55
framedescriptor2	56-63
actiondescriptor	64-71
ccbase	72-75
ks	76-76
hpnia	77-79
sperc	80-80
ipver	85-85

Table continues on the next page...

Table 82. Result Array Variables (continued)

Variable Name	Result Array Bytes Referenced
iplength	86-87
icp	90-91
attr	92-92
nia	93-95
ipv4sa	96-99
ipv4da	100-103
ipv6sa1	96-103
ipv6sa2	104-111
ipv6da1	112-119
ipv6da2	120-127

Note: The $GPR2 variable is used internally by the FMC Tool to calculate complex expressions, including checksum calculations. Using $GPR2 for other purposes is possible, but is not supported or recommended.

8.2.6.11.6.1.3.2 Parameter Array Variable

This variable returns data from the parameter array. Because the parameter array is more than 8 bytes long, you must specify the particular bytes needed.

Accessing parameter array variables: $PA[byteOffset:byteNumber] - returns the byteNumber number of bytes in the parameter array starting at byteOffset.

Example: The expression "$PA[4:2]" accesses the fifth and sixth bytes (indexed at PA[4] and PA[5]) of the parameter array.

8.2.6.11.6.1.3.3 Header Size Variables

Header size variables return the header size or default header size of a protocol header.

Accessing header size variables: $headerSize or $defaultHeaderSize

- In the 'before' element, the $headerSize of the previous protocol header is returned. Accessing $defaultHeaderSize is not allowed.
- In the 'after' element, the $defaultHeaderSize variable returns the number of bytes in the custom protocol's format fields. The $headerSize variable returns the headerSize as defined by the 'headersize' attribute of the 'after' element. If the user has not specified a value for the 'headersize' attribute, $headerSize returns the same value as $defaultHeaderSize.

8.2.6.11.6.1.3.4 Frame Window Variable

The frame window variable ($FW) returns data from the frame array. In the 'before' element, the frame window variable returns data from the previous protocol's header. In the 'after' element, the frame window variable returns data from the custom protocol header.

Using the frame window variable: $variableName[bitOffset:bitNumber] - Returns the bitNumber number of bits in the frame header starting from bitOffset.

Note: The frame window uses similar syntax to the parameter array and result array variables; however, the frame window variable accesses bits instead of bytes.

Examples

To access the tenth and eleventh bits in the frame array (indexed at FW[9], FW[10]), use "$FW[9:2]".

To access the entire third byte of the frame array, use "$FW[16:8]".

The conditions in the example below are always true because the same bits can be accessed using either the $FW variable or header field names.

```
<format>
  <fields>
    <field type="bit" name="first" size="1" mask="0xE0"/>
    <field type="bit" name="second" size="1" mask="0x1"/>
    <field type="bit" name="third" size="1" mask="0xF"/>
    <field type="fixed" name="fourth" size="2"/>
  </fields>
</format>
...
<after>
  <if expr="first==$FW[0:3]"> ... </if>
  <if expr="second==$FW[7:1]"> ... </if>
  <if expr="third==$FW[8:4]"> ... </if>
  <if expr="fourth==$FW[16:16]"> ... </if>
</after>
```

8.2.6.11.6.1.3.5 The prevprotoOffset Variable

This variable returns the offset of the previous protocol's frame header. This variable has the same value in the 'before' and 'after' sections and always refers to the protocol defined in the 'prevproto' attribute of the protocol element.

In the 'before' element, the frame window's current location is equal to prevprotoOffset. In the 'after' element. the frame window's current location is equal to prevprotoOffset+headerSize.

Note: This variable is actually a "shortcut" to the result array and returns or modifies values taken directly from this array.

Table 83. Previous Protocol RA Return Values

If the previous protocol is ...	The value returned from result array is ...
ethernet	$ethoffset
gre	$greoffset
ipv4, ipv6	$Ipoffset_n
llc_snap	$llcsnapoffset
minencap	$minencapoffset
mpls	$mplsoffset_n
pppoe	$pppoeoffset
tcp, udp, sctp, dccp, ipsec_ah, ipsec_esp	$l4offset

Table continues on the next page...

Table 83. Previous Protocol RA Return Values (continued)

If the previous protocol is ...	The value returned from result array is ...
vlan	$vlanoffset_n
otherl3, otherl4	$NxtHdrOffset - When the previous protocol is otherl3 or other l4, the custom protocol and the previous protocol have the same offset. See Effect of Setting prevproto Attribute to otherl3 or otherl4.

8.2.6.11.6.2 Operators

The parser supports many operators. These operators can receive arithmetic or logical operands and return an arithmetic or logical value. An arithmetic value is a number, while a logical value is true or false. (See Arithmetic Expressions and Logical Expressions for more information.)

Table 84describes all operators and their associated properties. All dyadic operators (operators which receive two parameters) appear between two operands. All monadic operators appear before an operand.

Table 84. Supported Operators and their Properties

Name	Parameters	Description	Symbol
Greater than	Logical (Arithmetic, Arithmetic)	Checks if the value of the first expression is greater than the second	gt
Greater equal	Logical (Arithmetic, Arithmetic)	Checks if the value of the first expression is equal to or greater than the second	ge
Less than	Logical (Arithmetic, Arithmetic)	Checks if the value of the first expression is less than the second	lt
Less equal	Logical (Arithmetic, Arithmetic)	Checks if the value of the first expression is equal to or less than the second	le
Equal	Logical (Arithmetic, Arithmetic)	Checks if the two expressions are equal	==
Not equal	Logical (Arithmetic, Arithmetic)	Checks if the two expressions are not equal	!=
Logical AND	Logical (Logical, Logical)	Checks if both expressions are true	and
Logical OR	Logical (Logical, Logical)	Checks if either one of the expressions is true	or
Logical NOT	Logical (Logical)	Returns true if the expression is false; returns false otherwise	not
Add	32-bit Arithmetic (32-bit Arithmetic, 32-bit arithmetic)	Return the sum of the expressions	+
Subtract	32-bit arithmetic (32-bit Arithmetic, 32-bit arithmetic)	Return the difference between the two expressions (result of subtraction)	-
Add carry	16-bit arithmetic (16-bit arithmetic, 16-bit arithmetic)	Return the sum of the two expressions summed with the carry after 32bit	addc

Table continues on the next page...

Table 84. Supported Operators and their Properties (continued)

Name	Parameters	Description	Symbol
Bitwise OR	Arithmetic (Arithmetic, Arithmetic)	Returns the result of a bitwise OR operation on the two expressions	bitwor
Bitwise XOR	Arithmetic (Arithmetic, Arithmetic)	Returns the result of a bitwise XOR operation on the two expressions	bitwxor
Bitwise AND	Arithmetic (Arithmetic, Arithmetic)	Returns the result of a bitwise AND operation on the two expressions	bitwand
Bitwise NOT	Arithmetic (Arithmetic)	Returns the result of a bitwise NOT operation on the expression	bitwnot
Shift left	Arithmetic (Arithmetic, Integer - value up to 64 bits)	Return the left expression shifted left by the right expression	shl
Shift right	Arithmetic (Arithmetic, Integer - value up to 64 bits)	Return the left expression shifted right by the right expression	shr
Concat	Arithmetic (Arithmetic, Variable or Integer)	Special operator See The concat Operator for full documentation	concat
Checksum	Arithmetic (Arithmetic - value up to 0xffff, Arithmetic - value up to 256, Arithmetic - value up to 256)	Special operator See The checksum Operator for full documentation	checksum

8.2.6.11.6.2.1 The concat Operator

The concat operator shifts its first argument left and inserts its second argument to its right. The concat operation can be executed on variables or integers. If the second argument is a variable, the first argument is shifted left according to the known size of the variable. Result array variables have constant sizes and the size of the frame header's fields are set in the Custom Protocol file or the Standard Protocol file.

If the user accesses only specific bits in the second argument, the first argument is shifted left only by the number of bits specified.

If the second argument is an integer, the first argument is shifted left by the smallest word size into which the integer fits: 16, 32, 48, or 64.

Note: The second argument of a concat operation cannot be an expression because the FMC Tool does not know the size of an expression and therefore cannot shift the first argument properly. However, for expressions, you can replace the concat operation with a shift operation (as long as you know the number of bits to shift) and a bitwise OR operation.

Note: You should use concat instead of shift/bitwise OR when working with variables and integers in order to reduce code size.

For example, the following IF expression is true:

```
<assign-variable name="$shimr" value="2"/>
<assign-variable name="$GPR1[6:2]" value="3"/>
<if expr="1 concat $shimr concat $GPR1[6:2] concat 0x40000 == 0x102000300040000">
```

8.2.6.11.6.2.2 The checksum Operator

The checksum operator is a special operator with unique behavior and syntax. It appears before three operands that have parentheses around them. As a result, the concat operator looks like a function call - checksum(expression, integer, integer).

The first operand defines the initial checksum value. The second operand defines the frame window offset at which to start the checksum (relative to the current frame window location). The third operand defines the length of the data in bytes on which the checksum operation should be calculated.

Using these values, the checksum executes the add carry (addc) operation on 2-byte sized words in the frame window range specified. If the range specified contains an odd number of bytes to be checksummed, the last byte is padded on the right with zeros to form a 16-bit word for checksum purposes. The total sum is added to the initial checksum value using another addc operation. Therefore, the first argument that defined the initial sum value must be smaller than 0xffff. The result of the final addc operation is returned.

Note: Since it is only possible to access 256 bytes in the frame window, the last two arguments to the checksum operator must be less than or equal to 256.

Example

Suppose we have the following frame and the custom protocol header begins at offset 0xE (where 4500 appears):

```
FFFF FFFF FFFF 0CCB CC0D DDDD 0800 4500 002E 0000 4000 402F
2AA2 1000 0000 FFFE 0001 0308 0900 0000 0000 0000 0000 0000
0000 0000 0000 0000 0000 0000 DA95 36D6 6F15 778C
```

The following IF conditions will always be true:

```
<after>
  <if expr="checksum(0x30A2,2,7+2)==0xDAFF">
    ...
  </if>

  <if expr="checksum(0,0,20)==0xFFFF">
    ...
  </if>
</after>
```

The first checksum operation above performs the following calculation:

```
0x30A2 + (0x002E add 0x0000 addc 0x4000 addc 0x402F addc 0x2A00)
```

The second checksum operation performs the following calculation:

```
0x0000 + (0x4500 addc 0x002E addc 0x0000 addc 0x4000 addc 0x402F addc 0x2AA2
            addc 0x1000 addc 0x0000 addc 0xFFFE addc 0x0001)
```

8.2.6.11.6.2.3 Expression Priorities

Expressions containing multiple operators perform the operation according to the following rules, in the order shown:

1. Operations in parentheses are performed
2. Operations that have a higher priority are performed
3. Multiple operations with the same priority are then executed from left to right

Note: Parentheses are recommended when several operators appear in the same expression to ensure correct calculation.

8.2.6.11.6.2.4 Operator Precendence

If several operators appear in the same expression (without separating parentheses), they are performed in the following order:

1. NOT, bitwise NOT, checksum
2. add, subtract, add carry

3. bitwise AND, bitwise OR, bitwise XOR
4. shift right, shift left, concat
5. greater than, greater equal, less than, less equal, equal, not equal
6. AND, OR

8.2.6.11.6.2.5 Variable Size

In most operations, expression size is limited to 64 bits. However, there are a few exceptions:

- When shifting variables, the shift value must be less than or equal to 64 bits since there are only 64 bits in an expression.
- The add carry operation can only be performed on 16-bit variables and always returns a 16-bit variable. The Soft Parser reports an error if an add carry operation is performed on a constant larger than 16 bits, but does not recognize a complex expression larger than 16 bits. Therefore, it is the responsibility of the user to perform the operation on 16-bit variables only.
- The subtract and add operators can only be performed on 32-bit variables and they always return a 32-bit result. If two 32-bit expressions are added and their result is larger than 32 bits, only the carry is returned, such that the returned value is a 32-bit variable. The Soft Parser reports a warning if an add carry operation is performed on a constant larger than 32 bits, but does not recognize a complex expression larger than 32 bits. Therefore, it is the responsibility of the user to perform the operation on 32-bit variables only.

For example, the following IF expressions are always true:

- ```
  <if expr="0xFFFFFFFF+2==0x1">
  ```
- ```
  <if expr="0x123456781+3==0x123456784">
  ```

The following IF expression is false (and should not be used):

- ```
  <if expr="3+0x123456781==0x123456784">
  ```

8.2.6.11.6.3 Expression Types

There are two main types of expressions: Logical expressions, which return "true" or "false", and arithmetic expressions, which return a numeric result.

8.2.6.11.6.3.1 Logical Expressions

Logical expressions appear in the 'expr' attribute of the 'if' element.

These expressions always return "true" or "false" and, therefore, must use at least one logical operator that separates arithmetic and logical operators.

Examples

The following expressions are logical expressions:

- ```
  (4+1==$shimoffset_1 or 5!=$shimoffset_2)
  ```
- ```
  not($shimoffset_2 ge $shimoffset_1 or $shimoffset_1 lt $shimoffset_2)
  ```

The following expressions are NOT logical expressions:

- ```
  (7 gt 3 and 2+7)
  ```
- ```
  (5 lt 8 or 7)
  ```
  ```

8.2.6.11.6.3.2 Arithmetic Expressions

Arithmetic expressions always have a numeric result. They can hold a single operand (a number, variable, or arithmetic expression) or more than one operand separated by arithmetic operators. Logical operators are not allowed in arithmetic expressions.

Arithmetic expressions can appear in the following places:

- The value attribute of the assign element
- The headersize attribute of the after element
- The expr attribute of the switch element

Examples

The following are arithmetic expressions:

- ```
  ($FW[0:16]+4)
  ```
- ```
  ($shimoffset_1 concat 3)
  ```
- ```
  (3+7+8+$shimoffset_2)
  ```
- ```
  4
  ```

The following is NOT an arithmetic expression:

- ```
  4==$shimoffset_2
  ```

8.2.6.11.7 Tips and Recommendations

8.2.6.11.7.1 Result Array Fields that Must be Manually Updated

The FMC Tool lets you define custom protocol headers, and the Soft Parser parses these headers. However, the Soft Parser does not update header fields for you (other than advancing the frame window and updating the line-up confirm vector (LCV) with the previous protocol). (See The before Element, The after Element, and The action Element (for use in a Custom Protocol file) topics for more information.)

Therefore, some result array fields are left empty unless you manually update them. These fields might be needed in later stages in order for the Soft Parser to correctly interpret the custom protocol header. A list of result array fields that should be updated appears in the Frame Manager Parser section of the *QorIQ Data Path Acceleration Architecture (DPAA) Reference Manual*. These fields include $Classificationplanid, $nxtHdr, $Runningsum, HXS offsets, Last E Type Offset, and $nxtHdrOffset. Note that the HXS offsets, $nxtHdr, and $nxtHdrOffset fields are also used internally by the Soft Parser; therefore, these fields should be modified carefully.

The $nxtHdr fields should be modified only if the custom protocol does not jump to 'after_ip' or 'after_ethernet', or if you want to change the next protocol when jumping to 'after_ip' or 'after_ethernet'. You should only modify the HXS offsets and next header offsets in the 'after' element or in the 'before' element if the parser exits without advancing the frame window.

Finally, the LCV should be manually updated when a custom protocol is being parsed. This can be done using the 'confirmcustom' attribute, which is available in the 'before', 'after', and 'action' elements.

8.2.6.11.7.2 Result Array Fields that Should Not be Modified

Some fields in the result array are for the Soft Parser's exclusive use and therefore should not be modified by the user. These fields are:

- $GPR1 is used to store temporary values in complex operations; therefore, you should not modify it.
  ```

- $nxtHdr is used to calculate the position of the next protocol header when the 'protocol' element's 'nextproto' attribute is set to 'next_ethernet' or 'next_ip'. Therefore, this variable should not be modified when 'nextproto' equals one of these values.
- $prevprotoOffset is used to advance the frame window between the 'before' and 'after' elements or when using the 'action' element with the 'advance' attribute in the 'before' element. Therefore, this variable should not be modified in the 'before' element unless the Soft Parser exits this element without advancing the frame window. In addition, $prevprotoOffset can equal these result array variables: $ethoffset, $greoffset, $ipoffset_n, $llcsnapoffset, minencapoffset, mplsoffset_n, pppoeoffset, l4offset, vlanoffset_n, and $nxtHdrOffset. As a result, these variable should also not be modified by code in the 'before' element.
- $nxtHdrOffset is used to advance the frame window between the 'before' and 'after' elements or when using the 'action' element with the 'advance' attribute in the 'before' element. Therefore, this variable should not be modified in the 'before' element unless the Soft Parser exits this element without advancing the frame window.

8.2.6.11.7.3 Setting the Next Protocol

The Soft Parser can be used to add code for an existing protocol or to define an entirely new protocol. When it is used as an extension for an existing protocol and no new frame headers are being parsed, the 'nextproto' attribute of the 'action' element should be set to 'return'. In this case, the nextproto attribute can also be left empty since 'return' is the default value. If 'return' is set, the Soft Parser will execute its code and then the Hard Parser will continue parsing at the same position in the frame header at which it stopped.

When the Soft Parser is used for a custom protocol with its own header, the Hard Parser must skip this header (since it does not know how to parse it) and, therefore, the next protocol must be set to a specific protocol. If the next protocol is unknown, the 'nextproto' attribute in the 'action' element can be set to 'after_ip' or 'after_ethernet'. In these cases, the next protocol header is determined using the value of the $nxtHdr field.

Example

1. If we want to execute the Soft Parser because when we parse the Ethernet protocol, our code will likely include an action similar to the action below, which will appear in the 'before' element.

```
<action type="exit" advance="no" next="return">
```

2. If we want to add a custom protocol after Ethernet and then jump to IPv6, our code will likely include an action similar to the action below, which will appear in the 'after' element...

```
<action type="exit" advance="yes" next="ipv6">
```

3. If we want to add a custom protocol after the Ethernet header, and we do not know where to jump next, our code will likely include an action similar to the action shown below, which will appear in the 'after' element. In this case when "after_ethernet" is used as next protocol, $nxtHdr variable but be dynamically assigned accordingly from custom protocol header by using next protocol and field names as value.

```
<assign-variable name="$nxtHdr" value="protocol.field"/>
<action type="exit" advance="yes" next="after_ethernet">
```

8.2.6.11.8 Limitations

This section discusses limitations you should consider when working with the FMC Tool's Soft Parser functionality.

8.2.6.11.8.1 Complex Expressions

Some expressions contain so many operations and parentheses that they are too complicated for the Soft Parser. If you receive an error stating that an expression is too complex, it may be necessary to simplify the expression by splitting it into multiple, smaller expressions, using parentheses, or storing temporary values in the result array variables.

Note: $GPR1 is recommended for storing temporary variables. Do not use $GPR2 for temporary variables because it is used internally by the tool).

Note that the checksum operation expressions can easily become too complex and must be simplified.

8.2.6.12 NetPCD Reference

8.2.6.12.1 The netpcd element

The 'netpcd' element is the root element of a NetPCD document (also known as a policy file). As a result, the 'netpcd' element must appear before any other NetPCD element.

8.2.6.12.1.1 netpcd Attribute Definitions

Table 85. netpcd Attribute Definitions

Attribute	Requirement	Description
name	optional	Free text. Use to describe the name and the purpose of the Policy file.
version="1.0"	optional	Version of the NetPCD DTD or XML schema. Currently there is only one version - "1.0," which is the default.
creator	optional	Author's name
date	optional	Date the document was created

8.2.6.12.1.2 netpcd Example

```
<?xml version="1.0"?>
<netpcd version="1.0" name="Example" creator="Serge Lamikhov">
  <!-- Other NetPCD elements like 'policy', 'distribution', etc -->
  <policy name="ipv4">
    <dist_order>
      <distributionref name="eth_dist"/>
      <distributionref name="default_dist"/>
    </dist_order>
  </policy>
</netpcd>
```

8.2.6.12.2 The policy element

The 'policy' element defines a prioritized list of distributions.

A policy element is assigned (via its name attribute) to a port or ports using markup in the Configuration file. Thus, the 'policy' element is the means by which specific PCD rules defined in the Policy file are applied to traffic arriving on particular FMan ports.

Upon receipt of a frame on given port, the Hard Parser tries to match this frame to the distribution listed first in the policy assigned to this port. If the frame matches, this distribution handles the frame. If the frame does not match, the Hard Parser next tries to match the frame to the second distribution in the policy list. This process continues until a distribution in the list matches or no more distributions are left in the policy element's list, in which case, the frame is placed on the FMan's default receive queue.

8.2.6.12.2.1 policy Attribute Definitions

Table 86. policy Attribute Definitions

Attribute	Requirement	Description
name	required	Name of the policy. A port definition in the Configuration file references this name, thereby applying this policy to all frames arriving on this port.

8.2.6.12.2.2 policy Example

```
Policy File

<policy name="ipv4"> <!-- policy name is ipv4 -->
  <dist_order>
    <distributionref name="eth_dist"/>
    <distributionref name="default_dist"/>
  </dist_order>
</policy>


Configuration File

<cfgdata>
  <config>
    <engine="fm0">
      <port type="MAC" number="1" policy="ipv4"/> <!-- policy name ipv4 goes here -->
    </engine>
  </config>
</cfgdata>
```

8.2.6.12.3 The dist_order element

The 'dist_order' element is a container for a list of distribution references.

The Hard Parser chooses a particular distribution in this list at the moment when the protocol set made from the protocols participating in a distribution is a subset of the protocols found in the current network packet.

The distribution reference list contained within 'dist_order' element is processing sequentially, and the first conforming distribution is the distribution that is used. Thus, the order of distribution references is important.

8.2.6.12.3.1 dist_order Attribute Definitions

Table 87. dist_order Attribute Definitions

Attribute	Requirement	Description
none	n/a	n/a

8.2.6.12.3.2 dist_order Example

```
<policy name="ipv4">
  <dist_order>
    <distributionref name="tcp_dist"/>
    <distributionref name="udp_dist"/>
```

```
    <distributionref name="ethernet_dist"/>
    <distributionref name="default_dist"/>
  </dist_order>
</policy>
```

Note: In this example, putting "ethernet_dist" (which is supposed to process network traffic other than TCP and UDP) above "tcp_dist" will lead to all traffic be distributed according to "ethernet_dist" rule and no packets will reach "tcp_dist" or "udp_dist" rules. This is because the Ethernet protocol is a part of TCP and UDP frames as well.

8.2.6.12.4 The distributionref element

The 'distributionref' element references a 'distribution' element by its name.

The 'dist_order' element contains one or more 'distributionref' elements, thereby defining a prioritized list of distributions.

8.2.6.12.4.1 distributionref Attribute Definitions

Table 88. distributionref Attribute Definitions

Attribute	Requirement	Description
name	required	Name of the referenced 'distribution' element

8.2.6.12.4.2 distributionref Example

```
<policy name="ipv4">
  <dist_order>
    <distributionref name="eth_dist"/>
    <distributionref name="default_dist"/>
  </dist_order>
</policy>
```

8.2.6.12.5 The distribution element

The 'distribution' element is a container for child elements that define frame match rules and frame handling rules.

Frame match rules determine whether the current frame matches (and is therefore handled by) this distribution. Frame handling rules define what action is performed on matching frames.

Use the 'protocols' element and/or the 'key' element to define frame match rules.

Use the 'action', 'key', 'queue', and 'combine' elements to define frame handling rules.

An 'action' element within a the distribution passes the frame to the specified Policy file element for further processing

The 'key', 'queue' and (optional) 'combine' elements within a distribution together provide inputs to a hash algorithm that distributes frames evenly over a range of frame queues. The 'key' element defines the protocol header fields to use as the hash key, the 'queue' element defines the base value and number of FQIDs in the frame queue range, and the optional 'combine' elements give you fine control over the exact FQIDs that the algorithm generates.

Note: You can use an 'action' element in the hash scenario described above to pass the frame to a policer profile, which may abort the enqueue operation and drop the frame if traffic conditions warrant. In the absence of an 'action' element, frame processing concludes (and the frame leaves the FMan) at the end of the 'distribution' element.

A distribution's frame queue ID calculation is performed as follows:

- A hash key is formed by extracting and concatenating the protocol header fields specified by the 'key' element.
- The result value is hashed to a 64-bit CRC.

- The number of least significant bits is taken based on the 'count' attribute of the 'queue' element.
- The resulting value is ORed with the data retrieved according to the 'combine' elements.
- The resulting value is ORed with the 'base' attribute value of the 'queue' element.

All child elements are optional. Appropriate hardware dependent default values are used in cases where a child element does not exist in the 'distribution' definition.

8.2.6.12.5.1 distribution Attribute Definitions

Table 89. distribution Attribute Definitions

Attribute	Requirement	Description
name	required	Name of the distribution. Any references to a distribution are made using to this name.
description	optional	Free text describing the element purpose.
comment	optional	Free text providing any other information.

8.2.6.12.5.2 distribution Example

```
<distribution name="eth_dist" description="Ethernet protocol based distribution">
  <queue count="0x400" base="0x810000"/>
  <key>
    <fieldref name="ethernet.src"/>
    <fieldref name="ethernet.dst"/>
  </key>
  <combine portid="true" offset="10" mask="0xFF"/>
  <combine frame="112" offset="2" size="16" mask="0xFF"/>
  <action type="classification" name="eth_dest_clsf"/>
</distribution>
```

8.2.6.12.5.3 Default Groups

XML 'defaults' element is a container for parameters necessary for configuration of the default groups and private default registers. The element, if it exists, can be used as a child of element 'distribution'. This element contains a list of ‘default’ elements.

Table 90. 'default' Elements Attributes:

Attribute	Requirement	Description
private0	optional	The scheme default register 0.
private1	optional	The scheme default register 1.

Element 'default' attributes. This element can appear as a child to the element 'defaults':

Table 91. 'default' Element Attributes:

Attribute	Requirement	Description
type	required	Default type select. Possible values are: 1. "from_data” – any data extraction that is not one of the full fields that can be used as type.

Table continues on the next page...

Table 91. 'default' Element Attributes: (continued)

Attribute	Requirement	Description
		2. "from_data_no_v" – any data extraction without validation. 3. "not_from_data" – extraction from parser result or direct use of default value. 4. "mac_addr" – MAC Address. 5. "tci" – TCI field. 6. "enet_type" – ENET Type. 7. "ppp_session_id" – PPP Session id. 8. "ppp_protocol_id" – PPP Protocol id. 9. "mpls_label" – MPLS Label. 10. "ip_addr" – IP Addr. 11. "protocol_type" – Protocol type. 12. "ip_tos_tc" – TOC or TC. 13. "ipv6_flow_label" – IPV6 flow label. 14. "ipsec_spi" – IPSEC SPI. 15. "l4_port" – L4 Port. 16. "tcp_flag" – TCP Flag
select	required	Default register select. Possible values are: 1. "gbl0" – Default selection is KG register 0. 2. "gbl1" – Default selection is KG register 1. 3. "private0" – Default selection is a per scheme register 0. 4. "private1" – Default selection is a per scheme register 1

Here is an example of possible default groups and nonheader definition:

```
<distribution name="Distribution1">
        <queue base="1" count="8"/>
        <key>
                <fieldref name="ipv4.src"/>
                <fieldref name="ipv4.dst"/>
                <fieldref name="ipv4.nextp"/>
                <nonheader source="default" offset="0" size="4"/>
        </key>
        <defaults private0="0xAAAAAAAA">
                <default type="from_data" select="private0"/>
                <default type="from_data_no_v" select="private0"/>
                <default type="not_from_data" select="private0"/>
        </defaults>
        <action type="drop"/>
</distribution>
```

8.2.6.12.6 The key element

The 'key' element contains a list of 'fieldref' elements. The 'filedref' elements define the protocol header fields whose values are concatenated to form a hash key. The Key Gen sub block hashes this key and uses a portion of the result in its frame queue ID (FQID) calculation.

8.2.6.12.6.1 key Attribute Definitions

Table 92. key Attribute Definitions

Attribute	Requirement	Description
shift	optional	Defines the amount by which the concatenation of the fields in the 'key' element are right shifted. The default value is zero. **Note:** The 'shift' attribute is ignored if the 'key' elements appears within a 'classification' element.
symmetric	optional	Generate the same hash for frames with swapped source and destination fields on all layers. If source is selected, destination must also be selected, and vice versa.

8.2.6.12.6.2 key Example

```
<key shift="16">
  <fieldref name="ethernet.src"/>
  <fieldref name="ethernet.dst"/>
</key>
```

8.2.6.12.7 The fieldref element

The 'fieldref' element refers to a protocol header field by its name.

The Standard Protocol file contains the names of the available protocols and their fields. This file is named hxs_pdl_v3.xml and is in the directory /etc/fmc/config/.

8.2.6.12.7.1 fieldref Attribute Definitions

Table 93. fieldref Attribute Definitions

Attribute	Requirement	Description
name	required	The referenced field name. The field's name should be provided in the form of "protocolname.fieldname".

8.2.6.12.7.2 fieldref Example

```
<key>
  <fieldref name="ethernet.src"/>
  <fieldref name="ethernet.dst"/>
</key>
```

8.2.6.12.8 The queue element

The 'queue' element defines the number of queues (default is one) and the base value for the FQIDs for these queues.

When used within a 'distribution' element, the 'queue' element defines a range of queues over which to evenly distribute frames.

When used within other elements, such as a 'classification' element, the 'queue' element defines the single queue on which to place a frame.

8.2.6.12.8.1 queue Attribute Definitions

Table 94. queue Attribute Definitions

Attribute	Requirement	Description
base	required	The base frame queue ID value.
count	optional	This attribute is only relevant only when a 'queue' element appears within a 'distribution' element. In this case, the 'count' attribute defines the number of frame queues over which to distribute frames. Valid values for 'count' are powers of 2. The default value is 1.

8.2.6.12.8.2 queue Example

```
<distribution name="eth_dist">
  <queue count="0x400" base="0x810000"/>
  <key>
    <fieldref name="ethernet.src"/>
    <fieldref name="ethernet.dst"/>
  </key>
</distribution>
```

8.2.6.12.9 The protocols and protocolref elements

The 'protocols' and 'protocolref' elements are used together to extend a 'distribution' element's frame match conditions.

As explained in the 'dist_order' description, a distribution is chosen based on the set of protocols specified in its 'key' element. The 'protocols' and 'protocolref' elements let you extend this set of protocols beyond those listed in the 'key' element.

8.2.6.12.9.1 protocols and protocolref Attribute Definitions

Table 95. protocols and protocolref Attribute Definitions

Attribute	Requirement	Description
name	required	The name of the protocol.
opt	optional	Applicable only for protocolref attribute Use it in a scheme for detecting protocols with the chosen options (e.g. to detect ETHERNET with BROADCAST or MULTICAST option) Table 2 contains all possible values. The values are grouped, each group being separated by a blank row. Values from different groups can be ORed

Table 96. Protocol options. Groups are separated by empty rows.

Value	Description
0x80000000	Ethernet Broadcast
0x40000000	Ethernet Multicast
0x20000000	Stacked VLAN
0x10000000	Stacked MPLS
0x08000000	IPv4 Broadcast
0x04000000	IPv4 Multicast
0x02000000	Tunneled IPv4 - Unicast
0x01000000	Tunneled IPv4 - Broadcast/Multicast
0x00000008	IPV4 reassembly option. When using this option, the IPV4 Reassembly manipulation requires network environment with IPV4 header
0x00800000	IPv6 Multicast
0x00400000	Tunneled IPv6 - Unicast
0x00200000	Tunneled IPv6 - Multicast
0x00000004	IPV6 reassembly option. When using this option, the IPV6 Reassembly manipulation requires network environment with IPV6 header.In case where fragment found, the fragment-extension offset may be found at 'shim2' (in parser-result).
0x00000008	CAPWAP reassembly option. When using this option, the CAPWAP Reassembly manipulation requires network environment with CAPWAP header. In case where fragment found, the fragment-extension offset may be found at 'shim2' (in parser-result).

8.2.6.12.9.2 protocols and protocolref Example

```
<!-- The example demonstrates the case in which -->
<!-- frame queue ID calculation is done using Ethernet header fields, -->
<!-- but the condition for matching a frame to this distribution is -->
<!-- extended by also requiring the presence of a UDP protocol header -->
<distribution name="eth_dist">
  <protocols>
    <protocolref name="udp" opt="0x00000008"/>
  </protocols>

  <queue count="0x400" base="0x810000"/>
  <key>
    <fieldref name="ethernet.src"/>
    <fieldref name="ethernet.dst"/>
  </key>
</distribution>
```

8.2.6.12.10 The combine element

The 'combine' element (like the 'key' element) is used in a 'distribution' element's frame queue ID calculation. The value built by the 'key' element is hashed, but the value of the 'combine' element is directly bitwised OR'd with the previous 24-bit FQID result.

A single 'combine' element identifies just one byte to retrieve and OR. To work around this limitation, you can have multiple 'combine' elements in a 'distribution' element.

8.2.6.12.10.1 combine Attribute Definitions

Table 97. combine Attribute Definitions

Attribute	Requirement	Description
portid	required *(in absence of frame attribute)*	Valid values: true or false If true, this attribute indicates that the logical port ID byte specified in the Configuration file should be retrieved and used in the bitwise OR part of a distribution's FQID calculation. *Note that portid and frame are mutually exclusive attributes.*
frame	required *(in absence of portid attribute)*	Valid values: numeric string This attribute identifies the byte with the frame header to extract and use in the bitwise OR part of the FQID calculation. The attribute's value indicates the bit offset from the beginning of the frame. The specified value must be divisible by 8, so it references the first bit of a byte. *Note that portid and frame are mutually exclusive attributes.*
offset	optional	This attribute controls the placement of the extracted data in the result Frame Queue ID. The offset starts at the FQID's most significant bit.
mask	optional	This attribute defines valid bits in the retrieved value. The extracted value is bitwise ANDed with the mask prior to being ORed with the previous Frame Queue ID value.

8.2.6.12.10.2 combine Example

```
<distribution name="eth_dist">
  <queue count="0x400" base="0x810000"/>
  <key>
    <fieldref name="ethernet.src"/>
    <fieldref name="ethernet.dst"/>
  </key>
  <combine portid="true" offset="10" mask="0xFF"/>
  <combine frame="64" offset="2" mask="0xFF"/>
  <action type="classification" name="eth_dest_clsf"/>
</distribution>
```

8.2.6.12.11 The action element (for use in a policy file)

The 'action' element permits you to establish a topological parse, classify, police, distribute configuration by defining the next processing element within a distribution, classification, or policer profile.

If there is no 'action' element within a distribution, classification, or policer profile, the default behavior is the completion of PCD frame processing, allowing the frame to leave the Frame Manager. Some hardware restrictions apply in the choice of the next processing element.

8.2.6.12.11.1 action Attribute Definitions

Table 98. action Attribute Definitions

Attribute	Requirement	Description
type	required	The type of the 'action' element defines the next processing element. Valid values are: • "distribution" • "classification" • "policer" • "drop" (Permitted only when the 'action' element is inside a 'policer' element.)
name	required	The name of the element of the type defined in the 'type' attribute. This attribute is not relevant if type is "drop".
condition	required *(when used within a 'policer' element)* optional *(when used within a 'distribution' or 'classification' element)*	This attribute defines the condition under which the 'action' is to be taken. This attribute is only relevant when used inside a 'policer' or a 'classification' element. Valid values are: • "on-green" • "on-yellow" • "on-red" • "on-miss"

8.2.6.12.11.2 Statistics

Attribute 'statistics' for action element of the classification and classification entries. This tells if statistics are made on that entry or on the on-miss.

Table 99. 'statistics' Element Attributes:

Attribute	Requirement	Description
statistics	optional	Enable statistics for a particular action. Possible values are: • enable/yes/true – to enable it. • disable

8.2.6.12.11.3 action Example

```
<distribution name="special_dist">
  <queue count="1" base="0xABCD"/>
  <action type="policer" name="policer2"/>
</distribution>

<policer name="policer2">
  <algorithm>rfc2698</algorithm>
  <color_mode>color_aware</color_mode>
  <CIR>1000000</CIR>
  <EIR>1400000</EIR>
  <CBS>1000000</CBS>
  <EBS>1400000</EBS>
  <unit>packet</unit>
  <action condition="on-green" type="distribution" name="special2_dist"/>
  <action condition="on-yellow" type="drop"/>
  <action condition="on-red" type="drop"/>
</policer>
```

8.2.6.12.12 The classification element

The 'classification' element allows exact match frame processing.

A classification starts with a 'classification' element, which is a container for these child elements:

- A 'key' element that defines the header fields (in protocol.field form) to use in the exact match operation
- One or more 'entry' elements, each of which defines a value to which the specified fields are compared and a 'queue' and/or 'action' element that defines what to do with the frame upon a match
- An optional 'action' element that defines the default action to take if none of the exact match conditions is met

8.2.6.12.12.1 classification Attribute Definitions

Table 100. classification Attribute Definitions

Attribute	Requirement	Description
name	required	The name of the classification

8.2.6.12.12.2 classification Statistics

The statistics are enabled on the Classification element. The parameters to setup the statistics are: - the attribute **statistics** of the element **classification**, the attribute **statistics** of the actions on entries/on-miss and the element **framelength** with attributes **index** and **value**.

Attribute ‘statistics’ for classification – this specifies the type of statistic used in the entire classification

Table 101. 'statistics' Element Attributes:

Attribute	Requirement	Description
statistics	optional	Choose statistic mode for the particular entry. Possible values are: • none • frame • byteframe • rmon

8.2.6.12.12.3 classification Example

```
<classification name="eth_dest_clsf">
  <key>
    <fieldref name="ethernet.dst"/>
  </key>

  <entry>
    <data>0x1234567890AB1234567890AB</data>
    <queue base="0x550000"/>
  </entry>

  <entry>
    <data>0xFFFFFFFFFFFFFFFFFFFFFFFF</data>
    <action type="classification" name="eth_dest_2_clsf"/>
  </entry>

  <action condition="on-miss" type="distribution" name="default_dist"/>
</classification>
```

8.2.6.12.12.4 Frame Replicators

The element **replicator** is implemented in FMC as a standalone entity.

This element can follow a Classification in the flow, as a target for one of the actions of the entries or on the on-miss. It is similar to Classification but it has no data/mask in entries, on-miss action and key element.

Table 102. 'fragmentation' Element Attributes:

Attribute	Requirement	Description
name	required	Name of the element. The name is used to refer the frame replicator.
max	optional	The maximum number of entries the frame replicator can have (default and minimum is 2). If the value entered is smaller than 2 or the attribute is not set, the value is set to 2.

The element **entry** has the same syntax as the element **classification**, but the data and mask are not needed and thus are ignored. The action targets of the entry are restricted to:

- policer
- enqueue
- direct distribution

replicator example:

```
<replicator name="frep_1" max="32">
     <entry>
         <action type="policer" name="policer_1"/>
     </entry>
     <entry>
         <queue base="0x0"/>
         <action type="distribution" name="dist_1"/>
     </entry>
     <entry>
         <queue base="0x220"/>
         <vsp name=”vsp01”>
     </entry>
     <entry>
         <queue base="0x240"/>
         <vsp base=”2”>
     </entry>
</replicator>
```

Using the frame replicator in an action:

```
<classification name="class_1" max="0" masks="yes">
     <key>
        <fieldref name="ethernet.type"/>
     </key>
     <entry>
        <data>0x8870</data>
        <queue base="0x01"/>
        <action type="replicator" name="frep_1"/>
     </entry>
     <action condition="on-miss" type="replicator" name="frep_1"/>
</classification>
```

8.2.6.12.12.5 framelength Statistics

Element **framelength** attributes (there can be up to 10 values set, in ascending order and last one must be `0xFFFF`). The element **framelength** is valid only for RMON statistics.

Table 103. 'framelength' Element Attributes:

Attribute	Requirement	Description
statistics	required	The index for the frame length value specified. Possible values are from 0 to 9.
value	required	The value to be added at the specified index. Maximum value is `0xFFFF` and must be added at index 9. (FMC sets it initially by default).

8.2.6.12.12.6 Statistics Example

Statistics Example

```
<!-- Coarse classification -->
    <classification name="classif_1" max="32" masks="yes" statistics="rmon">
        <!-- Key value to be extracted from the packet -->
        <key>
            <fieldref name="ipv4.dst"/>
        </key>

        <framelength index="0" value="0x1100"/>
        <framelength index="1" value="0x1200"/>
        <framelength index="2" value="0x1300"/>
        <framelength index="3" value="0x1400"/>
        <framelength index="4" value="0x1500"/>
        <framelength index="5" value="0x1600"/>
        <framelength index="6" value="0x1700"/>
        <framelength index="7" value="0x1800"/>
        <framelength index="8" value="0x1900"/>
        <framelength index="9" value="0xFFFF"/>

        <!-- Entries in the lookup table -->
        <entry>
            <!-- 192.168.10.10 -->
            <data>0xC0A80A0A</data>
            <queue base="0x1010"/>
            <action statistics="enable"/>
        </entry>
    </classification>
```

8.2.6.12.12.7 Coarse Classification Resource Reservation

FMD API changes allow pre-allocation of MURAM memory for classification tables. This will be reflected in NetPCD XML syntax extension by introducing attibutes **max** and **masks** of the element **classification** as shown in the example below. In addition, to allow proper order of PCD elements initialization, and for the condition that not all **entry** elements are known at initialization time, the XML element **may-use** is introduced:

```
    <!-- Coarse classification -->
    <classification name="classif_1" max="32" masks="yes" statistics="mode">
        <!-- Key value to be extracted from the packet -->
        <key>
            <fieldref name="ipv4.dst"/>
        </key>

        <may-use>
            <action type="classification" name="fman_test_classif_1"/>
            <action type="distribution"   name="default_dist"/>
        </may-use>

        <!-- Entries in the lookup table -->
        <entry>
            <!-- 192.168.10.10 -->
            <data>0xC0A80A0A</data>
            <queue base="0x1010"/>
        </entry>
    </classification>
```

Resource Allocation Attributes:

Table 104. Resource Reservation Attributes:

Attribute	Requirement	Description
max	optional	If it exists, this parameter defines the maximum number of coarse classification entries allocated for this PCD element. **NOTE** The element **classification** may still contain pre-initialized entries, or, alternatively, be empty. **NOTE** For the case of empty or partially initialized element **classification**, usage of the element **may-use** might be required .
masks	optional	If provided, indicates that MURAM allocation should be done with the assumption that additional memory is required for an elements' masks. Possible values are: • no – don't allocate memory for masks (default) • yes – allocate memory for masks.

'may-use Element Description:

Table 105. 'may-use' Element Attributes:

Attribute	Requirement	Description
may-use	optional	Contains list of 'action' elements that may appear in the 'classification' entries or, be applied dynamically after partial initial configuration. **NOTE** Attention: the use of this element is required if initial 'classification' is empty and dynamic entries, added through FMD API, use those PCD entities

8.2.6.12.13 The entry element

The 'entry' element defines:

- the value to use in an exact match comparison with the fields specified by the 'key' element in a classification
- the action to be taken upon a match

An 'entry' element contains a 'data' element which, in turn, contains a numeric value written in hexadecimal form (that is, with a "0x" prefix). The data length of this value is determined by length of the set of 'key' fields.

In addition to the 'data' element, each 'entry' element may also contain these elements:

- queue - causes the frame to be placed on the specified queue
- action - passes the frame to the specified element within the Policy file for further processing.
- mask - a value in hexadecimal format that is applied to the data element

8.2.6.12.13.1 entry Attribute Definitions

Table 106. entry Attribute Definitions

Attribute	Requirement	Description
none	n/a	n/a

8.2.6.12.13.2 entry Example

```
<classification name="eth_dest_clsf">
  <key>
    <fieldref name="ethernet.dst"/>
  </key>

  <entry>
    <data>0x1234567890AB1234567890AB</data>
    <queue base="0x550000"/>
  </entry>
</classification>
```

8.2.6.12.14 The policer element

The 'policer' element is a container whose child elements define a policer profile that performs network bandwidth management.

8.2.6.12.14.1 policer Attribute Definitions

Table 107. policer Attribute Definitions

Attribute	Requirement	Description
name	required	Name of the policer profile.
algorithm	required	Algorithm used for policing. Valid values: "rfc2698", "rfc4115", pass_through".
color_mode	required	Color mode used for policing. Valid values: "color_aware", "color_blind".
default_color	optional	Use when algorithm is "pass_through" and color_mode is "color_blind". In this mode, the policer re-colors incoming packets with the specified default color. Valid values: "red", "yellow", "green", or "override". If the value is override, the next invoked action is that specified for "green". The default value is "green".
unit	required	The unit to be used for numeric parameters. Valid values: "packet", "byte".
CIR	required	Committed information rate[1]
PIR	required	Peak (or excess) information rate[1]
CBS	required	Committed burst size[2]
PBS	required	Peak (or excess) burst size[2]

1. If "unit" attribute is "packet" specify CIR and PIR in packets/second. If "unit" attribute is "byte" specify CIR and PIR in Kbits/second.
2. If "unit" attribute is "packet" specify CBS and PBS in packets. If "unit" attribute is "byte" specify CBS and PBS in bytes.

8.2.6.12.14.2 policer Example

```
<policer name="policer2">
  <algorithm>rfc2698</algorithm>
  <color_mode>color_aware</color_mode>
  <CIR>1000000</CIR>
  <EIR>1400000</EIR>
  <CBS>1000000</CBS>
  <EBS>1400000</EBS>
  <unit>packet</unit>
  <action condition="on-green" type="distribution" name="default_dist"/>
  <action condition="on-yellow" type="distribution" name="special2_dist"/>
  <action condition="on-red" type="drop"/>
</policer>
```

8.2.6.12.15 The nonheader element

Use the 'nonheader' element within a 'key' element to select a non-header extraction source.

Note: The 'nonheader' element can appear within a 'classification' element only. Further, the 'nonheader' element cannot be used at the same time as the 'fieldref' element.

8.2.6.12.15.1 nonheader Attribute Definitions

Table 108. nonheader Attribute Definitions

Attribute	Requirement	Description
source	required	Non-header extraction source Valid values are: • "frame_start" - Extract from beginning of frame. • "key" - Extract from key value built by ‘distribution’ at preceding step (CC only). • "hash" - Extract from hash value built by ‘distribution’ at preceding step (CC only). • "parser" - Extract from parse result array. • "fqid" - Use enqueue FQID as the key value. • "flowid" - Use dequeue FQID as the key value (CC only) • "default" - Extract from a default value (distribution only). • "endofparse" - Extract from the point where parsing had finished (distribution only).
action	Required if source is "hash", "flowid" or "key". In other cases, this attribute	The type of action for the extraction Valid values are:

Table continues on the next page...

Table 108. nonheader Attribute Definitions (continued)

Attribute	Requirement	Description
	must not be used.	• "indexed_lookup" (permitted only for "hash" and "flowid" sources). The extracted value is interpreted as an entry index of classification table • "exact_match" (permitted only for "key" and "hash" sources). The extracted value is compared with ‘key’ value of the entry.
offset	required	Byte offset. Offset of key from start of frame, internal frame context or parse result array. Refer “Table 8-398. Table Descriptor (Type = 01)” of DPAA Reference Manual for full description and possible values
size	required	Size of the key in bytes.
ic_index_mask	Optional (Valid only if action is "indexed_lookup ")	Internal context index mask. For the full description and possible values, refer “Table 8-399. Operation Code Description” of DPAA Reference Manual

If the action is “indexed_lookup” and the source is “hash” special checks are done in the drivers on the configured entries and maximum nuber of entries according to the internal context index mask specified. FMC is adjusting automatically the configured entries if they don’t match the provided mask: if the entry must be initialized but the user didn’t supplied it a default one is created and if the entry must be uninitialized it’s deleted by FMC. Also FMC ajdusts the maxim number of entries if it’s not configured as 0.

8.2.6.12.15.2 nonheader Example

```
<classification name="ptp_condition_class">
  <key>
    <nonheader source="hash" action="indexed_lookup" offset="2" size="2" ic_index_mask="0x01b0">
  </key>

  <entry>
    <data>0x13F</data>
    <queue base="0x01"/>
  </entry>
</classification>
```

8.2.6.12.16 Hash Tables

The element 'hashtable' can be specified inside an element 'key' of a 'classification'. The element 'hashtable' cannot appear in the same time with either elements 'fieldref' or 'nonheader' in the same 'key'. If the element 'hashtable' is used, the 'classification' may have no entries as these are supposed to be filled at runtime.

Table 109. 'fragmentation' Element Attributes:

Attribute	Requirement	Description
mask	required	Mask that will be used on the hash-result; The number-of-sets for this hash will be calculated as (2^(number of bits set in 'mask ')); The 4 lower bits must be cleared.

Table continues on the next page...

Table 109. 'fragmentation' Element Attributes: (continued)

Attribute	Requirement	Description
hashshift	optional	Byte offset from the beginning of the KeyGen hash result to the 2-bytes to be used as hash index.(Default 0)
keysize	required	Size of the exact match keys held by the hash buckets.

Hash table example:

```
<classification name="classif_1" max="2" statistics="none">
        <key>
            <hashtable mask="0x30" hashshift="0" keysize="24"/>
        </key>
</classification>
```

8.2.6.12.17 Virtual Storage Profiles Element

The element 'vsp' (Virtual Storage Profile) is implemented in FMC as a standalone entity or can be defined directly in the element that uses it. The element 'vsp'can be used inside distributions, classification and entries (both classification and replicator). When used directly in the ‘classification’ element (not in ‘entry’) it counts for the on-miss action. If the 'action' of the 'entry' or on-miss goes to another 'classification' or 'replicator' the 'vsp' is ignored.

8.2.6.12.17.1 vsp Attributes

Table 110. 'vsp' Element Attributes:

Attribute	Requirement	Description
name	required	Name of the element. The name is used to refer the virtual storage profile inside the elements that are using it.
type	optional	The type of the VSP. Values: • direct – (default) the relative profile ID is selected directly by the ‘base’ attribute. • indirect – the relative profile ID is selected base on the attributes **fqshift, vspoffset**, and **vspcount** can be used only in **distribution.**
base	required for direct.	--
fqshift	required for indirect.	Shift of KeyGen results without the FQID base.
vspoffset	optional for indirect	OR of KeyGen results without the FQID base; should indicate the storage profile offset within the port's storage profiles window.
vspcount	optional for indirect	Range of profiles starting at base.

8.2.6.12.17.2 vsp Examples

VSP examples (standalone, defined in element, direct/indirect): The action targets of the entry are restricted to:

```
<vsp name = "storage01" base = "6"/>
<vsp name = "storage02" type = "indirect" fqshift="2" vspoffset="3"       vspcount="8"/>
<vsp name = "storage03" type = "direct" base = "7"/>

Usage:

...
```

```
<entry>
            <queue base="0x220"/>
            <vsp name=”storage01”>
</entry>

...

<distribution name="dist1">
     ...
     <queue count="8" base="0x230"/>
     <vsp type=”indirect” fqshift=”2” vspoffset=”0” vspcount=”4”/>
     ...
</distribution>

...

<classification name="eth_dest_clsf">
    <key>
         <fieldref name="ethernet.dst"/>
    </key>
...
    <vsp name=”storage03”>
    <action condition="on-miss" type="distribution" name="garbage"/>
</classification>
```

8.2.6.12.18 Manipulation Parameters

Frame Manager accelerator (FMan) attaches manipulation actions as an extension to ethernet port and coarse classification ‘next engine’ dispatch activity.

To reflect the frame data processing and manipulation capabilities of the hardware, which are propagated through Frame Manager Driver (FMD) API, Frame Manager Configuration (FMC) Tool extends the syntax of the NetPCD configuration language by introducing XML entities described in this document.

Manipulation entities are diverse in their purpose and configuration parameters sets. The same manipulation entity can be referred, or attached, from/to several port or classification actions. That is why they are separated from their usage into a separate group called **manipulations**. At the moment of use, an action refers to the corresponding manipulation entity. For example:

```
<netpcd>
    <manipulations>
        <reassembly name=”name1”>
            .....
        </reassembly>
        <reassembly name=”name2”>
            .....
        </reassembly>
        <fragmentation name=”defrag1”>
            .....
        </fragmentation>
    </manipulations>

    <classification name=”clsf1”>
        .....
        <!-- 192.168.30.30 -->
        <data>0xC0A81E1E</data>
        <fragmentation name=”defrag1”/>
        .....
    </classification>
```

```
</netpcd>
```

Formal Definition:

XML element **manipulation** is a container for all types of manipulation algorithms. Configuration for each algorithm has its own XML element name.

Currently three manipulations algorithms are available:

1. IP reassembly
2. IP fragmentation
3. header manipulation

Parameters for these entities are described next.

8.2.6.12.18.1 IP Fragmentation

XML element **fragmentation** is a container for parameters necessary for configuration of the corresponding action modification. The element, if exists, can be used as a child of element **classification**.

Attention: If element **fragmentation** is present together with other 'action' of 'classification' element, the element **fragmentation** is ignored. This is a subject of FMan firmware capabilities and may change in future.

Table 111. 'fragmentation' Element Attributes:

Attribute	Requirement	Description
name	required	Name of the element. The name is used to refer the manipulation algorithm.

Table 112. 'fragmentation' Child Elements:

Attribute	Requirement	Description
size	required	IP fragmentation will be executed for frames with length greater than this value.
dontFragAction	optional	If an IP packet is larger than MTU and its DF bit is set, then this field will determine the action to be taken. Possible values are: • discard - the packet (default action) • fragment – fragment the packet and continue normal processing • continue - continue normal processing without fragmenting the packet
scratchBpid	required for existing HW platforms, but not for 9164	Absolute buffer pool id according to BM configuration (DPAA 1.0 only)
sgBpid	optional	Scatter/Gather buffer pool id. If used sgBpidEn will be set to TRUE.
optionsCounterEn	optional	Enables the counter if the value is set to 'yes', 'true' or 'enable'. Disabled for other values. Default is disabled.

Here is an example of possible IP fragmentation definition:

```
<manipulations>
    <fragmentation name="frag1">
        <size>256</size>
        <dontFragAction>continue</dontFragAction>
```

```
    </fragmentation>
</manipulations>

<classification name=”clsf1”>
    .....
    <!-- 192.168.30.30 -->
    <data>0xC0A81E1E</data>
    <fragmentation name=”frag1”/>
    .....
</classification>
```

8.2.6.12.18.2 IP Reassembly

XML element **reassembly** is a container for parameters necessary for configuration of the corresponding action modification. The element, if it exists, can be used as a child of the element **policy**.

Attention: Up to 2 additional KeyGen schemes will be constructed when using this manipulation action. Custom protocol **shim2** is reserved when element **reassembly** participates in a configuration.

Table 113. 'reassembly' Element Attributes:

Attribute	Requirement	Description
Name	required	Name of the element. The name is used to refer the manipulation algorithm

Table 114. 'reassembly' Child Elements:

Attribute	Requirement	Description
sgBpid	required	Absolute buffer pool id according to BM configuration for scatter-gather (DPAA 1.0 only)
maxInProcess	required	Number of frames which can be processed by reassembly at the same time. It has to be power of 2
dataLiodnOffset	optional	Offset of LIODN. Default value is 0
dataMemId	optional	Memory partition ID for data buffers
ipv4minFragSize	required	Minimum fragmentation size for IPv4
ipv6minFragSize	required	EMinimum fragmentation size for IPv6. The value must be equal or higher than 256
timeOutMode	optional	Expiration delay initialized by Reassembly process. Possible values are: • frame - limits the time of the reassembly process from the first fragment to the last (default) • fragment - limits the time of receiving the fragment
fqidForTimeOutFrames	required	FQID to assign for frames enqueued during Time Out Process.
numOfFramesPerHashEntry (numOfFramesPerHashEntry1)	required	Number of frames per hash entry needed for reassembly process – for ipv4. Possible values are: numeric values from 1 to 8.
numOfFramesPerHashEntry2	optional	Number of frames per hash entry needed for reassembly process – for ipv6. Possible values are: numeric values from 1 to 6.

Table continues on the next page...

Table 114. 'reassembly' Child Elements: (continued)

Attribute	Requirement	Description
timeoutThreshold	required	Represents the time interval in microseconds which defines if opened frame (at least one fragment was processed but not all the fragments)is found as too old
nonConsistentSpFqid	optional	Handles the case when other fragments of the frame corresponds to a different storage profile than the opening fragment. (DPAA >= 1.1 only). Default is 0

Here is an example of possible IP reassembly definition:

```
<manipulations>
    <reassembly name=”reasm1”>
        <sgBpid>2</sgBpid>
        <maxInProcess>1024</maxInProcess>
        <timeOutMode>fragment</timeOutMode>
        <fqidForTimeOutFrames>1024</fqidForTimeOutFrames>
        <numOfFramesPerHashEntry>8</numOfFramesPerHashEntry>
        <timeoutThreshold>1000000</timeoutThreshold>
        <ipv4minFragSize>0</ipv4minFragSize>
        <ipv6minFragSize>256</ipv6minFragSize>
    </reassembly>
</manipulations>

<policy name="udp_port">
   <dist_order>
       <distributionref name="custom_dist"/>
       <distributionref name="udp_port_dist"/>
       <distributionref name="default_dist"/>
   </dist_order>

   <reassembly name=”reasm1”/>
</policy>
```

8.2.6.12.18.3 Header Manipulation

XML element **header** is a container for parameters necessary for configuration of the corresponding action modification. The element, if it exists, can be used as parameter to the distribution action going to a classification or inside a classification element **entry**.

The XML element **header** may contain:

- **insert**
- **remove**
- **insert_header**
- **remove_header**
- **update**
- **custom**

Certain combinations between them are possible, for example you can have a **remove** and an **insert_header** in the same manipulation.

The header manipulation can be used inside the PCD by inserting an element **header** in the classification entry that specifies the name of the header manipulation defined in the section **manipulations**. This makes sense in a entry that goes to a policer, distribution or PCD done:

```
<entry>
   <data>0x9100</data>
   <queue base="0x01"/>
   <action type="policer" name="plcr_01"/>
   <header name="upd_hdr"/>
</entry>
```

Table 115. 'header' Element Attributes:

Attribute	Requirement	Description
name	required	Name of the element. The name is used to refer the manipulation algorithm
parse	optional	Activate the parser a second time after completing the manipulation of the frame (if ‘yes’)
duplicate	optional	Will duplicate the header manipulation with the same setting a the specified number of times. The names of the nodes will have “_x” added at the end where x is the index of the node. For example <header name=”upd_ipv4” duplicate=”3”> will create the nodes: upd_ipv4_1, upd_ipv4_2 and upd_ipv4_3. This is only a simple tool to duplicate a header manipulation, it does not allow defining chaining between the elements created by duplication.

8.2.6.12.18.3.1 Header Manipulation - Insert

XML element **insert** is a container for parameters necessary to configure a header insert manipulation operation. The element, if it exists, can be used as a child of element **header**. There can be only one element **insert** in a header manipulation.

Table 116. 'insert' Child Elements:

Element	Requirement	Description
size	required	Size of inserted section
offset	required	Offset from beginning of header to the start location of the insertion.
replace	optional	If provided, specifies to override (replace) existing data at 'offset' (if ‘yes’), ‘no’ to insert. Possible values: • no - insert (default) • yes - replace
data	required	Data to insert

8.2.6.12.18.3.2 Header Manipulation - Remove

XML element **remove** is a container for parameters necessary to configure a header remove manipulation operation. The element, if it exists can be used as a child of element **header**. There can only be one element **remove** in a header manipulation.

Table 117. 'remove' Child Elements:

Element	Requirement	Description
size	required	Size of removed section
offset	required	Offset from beginning of header to the start location of the removal.

8.2.6.12.18.3.3 Header Manipulation - Insert-Header

XML element **insert_header** is a container for parameters necessary to configure a header insert manipulation operation of an entire header (different than generic element **insert**). The element **insert_header** ,if it exists, can be used as a child of element **header**. With some restrictions, there can be more than one element **insert_header** in one header manipulation

Table 118. 'insert_header' Element Attributes

Element	Requirement	Description
type	required	The type of the header inserted. Only ‘mpls’ is valid at this time.
header_index	optional	The header index of the header has possible values "1" and "2". The restrictions on this attribute are: • if the value is ‘2’ an ‘insert_header’ with ‘header_index’ 1 must be present in the header manipulation. • a value of **header_index** can be used only once per header manipulation

Table 119. 'insert_header' Child Elements

Element	Requirement	Description
data	optional	The data of the header to be inserted.
replace	optional	If provided, specifies to override (replace) existing data (if ‘yes’), ‘no’ to insert.

insert_header example:

```
<header name="insert_2_l2">
    <insert_header type="mpls" header_index="1">
        <data>0x00000048</data>
    </insert_header>
    <insert_header type="mpls" header_index="2">
        <data>0x00000048</data>
    </insert_header>
</header>
```

8.2.6.12.18.3.4 Header Manipulation - Remove_Header

XML element **remove_header** is a container for parameters necessary to configure a header remove manipulation operation of an entire header (different then element **remove** that is a generic one). The element, if it exists, can be used as a child of element **header**'. There can be only one instance of element **remove_header** in a manipulation and it cannot appear in the same time with the generic **remove**.

Table 120. 'remove_header' Child Elements

Element	Requirement	Description
type	required	The type of the header remove. Possible values: • "qtags" • "mpls" • "ethmpls (or "ethernet_mpls") • "eth" (or "ethernet")

remove_header example:

```
<header name="remove_l2">
    <remove_header type="qtags/>
</header>
```

8.2.6.12.18.3.5 Header Manipulation - Update

XML element **update** is a container for parameters necessary to configure a header update manipulation. The element if exists can be used as a child of element **header**. There can be only one update in a header manipulation.

update Element Attributes:

Table 121. 'remove_header' Child Elements

Element	Requirement	Description
type	required	The type of the update. Possible values: • "vlan" • "ipv4" • "ipv6" • "tcpudp"

update Child Elements:

Table 122. 'remove_header' Child Elements

Element	Requirement	Description
field	required	Specifies the field to be updated. There must be atleast one inside an update. For some types of updates the field element can appear multiple times.

Field Element Attributes:

Table 123. 'remove_header' Child Elements

Element	Requirement	Description
type	required	The type of the header remove. Possible values: • for 'vlan'

Table continues on the next page...

Table 123. 'remove_header' Child Elements (continued)

Element	Requirement	Description
		— dscp - DSCP to VLAN priority bits translation. — vpri - Replace VPri of outer most VLAN tag . • for 'ipv4' — tos - update TOS with the given value. — id - update IP ID with the new 16 bit given value. — ttl - Decrement TTL by 1. — src - update IP source address with the given value. — dst - update IP destination address with the given value. • for 'ipv6' — tc - update Traffic Class address with the given value. — hl - Decrement Hop Limit by 1. — src - update IP source address with the given value. — dst - update IP destination address with the given value. • for 'tcpudp' — checksum - update TCP/UDP checksum. — src - update TCP/UDP source address with the given value. — dst - update TCP/UDP destination address with the given value.
value	optional	The value used for the update. It is not valid for: • hl • ttl • checksum
fill	optional	Only valid for **dscp** - fills the entire array with the given value. The fill is performed before the other **dscp** operations.
index	optional	Only valid for **dscp**. Speciefies the index in the array where that value is set. The index starts from 0.

'update' Example:

```
<header name="upd_checksum">
    <update type = "tcpudp">
        <field type="checksum"/>
    </update>
</header>

<header name="upd_ipv4src">
    <update type = "ipv4">
        <field type="src" value="0xC0A80101"/>
    </update>
</header>

<header name="upd_vpri">
```

```
    <update type = "vlan">
        <field type="dscp" fill="yes" value="4"/>
        <field type="dscp" index="20" value="2"/>
        <!--...-->
        <field type="dscp" index="30" value="2"/>
    </update>
</header>
```

8.2.6.12.18.3.6 Header Manipulation - Custom

XML element **custom** is a container for parameters necessary to configure custom header manipulation. The custom header manipulation supported by the drivers is now custom IP replace, and allows changing between ipv4 and ipv6.

'custom' Element Attributes

Table 124. 'custom' Element Attributes:

Element	Requirement	Description
type	required	The type of the custom header manipulation. Possible values are: • “ipv4byipv6” (or just “ipv4”) – Replaces ipv4 by ipv6. • -“ipv6byipv4” (or just “ipv6”) – Replaces ipv6 by ipv4.

'custom' Child Elements

Table 125. nextmanip Element Attributes:

Element	Requirement	Description
size	required	Size of the header to be inserted. (max is 256)
data	required	The header data to be inserted.
decttl	optional	Decrement TTL by 1 (ipv4). Possible values: • "yes" • "no"
dechl	optional	Decrement Hop Limit by 1 (ipv6). Possible values: • "yes" • "no"
ip (or 'ipid')	optional	16 bit New IP ID (ipv4)

'custom' Example:

```
<header name="custom_ex">
     <custom type="ipv6byipv4">
          <decttl>yes</decttl>
          <id>1</id>
          <size>0x20</size>
          <data>0x450000001234000000010000101112131415161 7</data>
     </custom>
</header>
```

8.2.6.12.18.3.7 Header Manipulation - Nextmanip

XML element **nextmanip** Can be used to setup cascading header manipulations. It relates to the header manipulation element and not sub-elements (insert, remove and update).

Table 126. Nextmanip element attributes

Element	Requirement	Description
name	required	The name of the next header manipulation

8.2.6.12.18.3.8 Header Manipulation - Example

Here is a general example of possible header manipulation definition:

```
<manipulations>
    <header name=”ins_rmv” parse=”yes”>
        <insert>
            <size>14</size>
            <offset>0</offset>
            <data>0x01020304050611121314151681 00</data>
        </insert>
        <remove>
            <size>14</size>
            <offset>0</offset>
        </remove>
    </header>

    <header name="vpri_update">
        <update type="vlan">
            <field type="vpri" fill="yes" value="0"/>
        </update>
    </header>

    <header name=”ins_vlan” parse=”no”>
        <insert>
            <size>4</size>
            <offset>12</offset>
            <data>0x81004416</data>
        </insert>
        <nextmanip name="vpri_update"/>
    </header>
</manipulations>


<classification name="clsf_1" max="0" masks="yes" statistics="none">
   <key>
      <fieldref name="ethernet.type”/>
   </key>
   <entry>
      <data>0x8847</data>
      <queue base="0x01"/>
      <action type="policer" name="plcr_1"/>
      <header name="ins_vlan"/>
   </entry>
   <entry>
      <data>0x8848</data>
      <queue base="0x02"/>
      <header name="ins_rmv"/>
```

```
   </entry>
</classification>
```

8.2.6.13 Standard Protocol File - Excerpt

The SDK includes a file called the Standard Protocol file. This file uses the NetPDL (Network Protocol Description Language) XML dialect to define the fields in each standard protocol header that the FMan can parse with its Hard Parser. In addition, for each protocol, the NetPDL statement define the actions the Hard Parser should take upon encountering this protocol header in the frame window.

For this reason, the SDK includes a copy of the Standard Protocol file here: /etc/fmc/config/hxs_pdl_v3.xml. In addition, to give you an idea what the file is like, a small portion is shown below.

```
<?xml version="1.0" encoding="utf-8"?>
<netpdl name="nbee.org NetPDL Database"
  version="0.2" creator="nbee.org" date="28-05-2008">
<!-- This file is for reference only. -->
<!-- It describes the protocols and fields supported by the FMan's Hard Parser-->

<!--
NetPDL description of the Ethernet Protocol
-->
<protocol name="ethernet" longname="Ethernet 802.3"
  comment="Ethernet DIX has been included in 802.3" showsumtemplate="ethernet">

  <execute-code>
    <!-- If we're on Ethernet IEEE 802.3, update the packet length -->
    <after when="buf2int(type) le 1500">
       <assign-variable name="$packetlength" value="buf2int(type) + 14"/>
       <!-- 14 is the size of the ethernet header -->
    </after>
  </execute-code>

  <format>
    <fields>
      <field type="fixed" name="dst" longname="MAC Destination" size="6"
        showtemplate="MACaddressEth"/>
      <field type="fixed" name="src" longname="MAC Source" size="6"
                        showtemplate="MACaddressEth"/>
      <field type="fixed" name="type" longname="Ethertype - Length" size="2"
    </fields>
  </format>

  <encapsulation>
    <!-- We have four possible encapsulations for IPX:
       - Ethernet version II
         ==> type= 0x8137
       - Novell-specific framing (raw 802.3)
         ==> directly in Ethernet; check that IPX checksum is == 0xFFFF
       - Ethernet 802.3/802.2 without SNAP
         ==> directly in SNAP; check that IPX checksum is == 0xFFFF (after SNAP hdr)
       - Ethernet 802.3/802.2 with SNAP
         ==> type= 0x8137 (in SNAP)
       See the "IPX Ethernet and FDDI Encapsulation Methods" Cisco doc, at:
       http://www.cisco.com/en/US/tech/tk389/tk224/
         technologies_q_and_a_item09186a0080093d2e.shtml
    -->
    <if expr="buf2int($packet[$currentoffset:2]) == 0xFFFF">
      <if-true>
```

```
        <nextproto proto="#ipx"/>
      </if-true>
    </if>
    <switch expr="buf2int(type)">
      <case value="0" maxvalue="1500"> <nextproto proto="#llc"/> </case>
      <case value="0x800"> <nextproto proto="#ip"/> </case>
      <case value="0x806"> <nextproto proto="#arp"/> </case>
      <case value="0x8863"> <nextproto proto="#pppoed"/> </case>
      <case value="0x8864"> <nextproto proto="#pppoe"/> </case>
      <case value="0x86DD"> <nextproto proto="#ipv6"/> </case>
      <case value="0x8100"> <nextproto proto="#vlan"/> </case>
      <case value="0x8137"> <nextproto proto="#ipx"/> </case>
      <case value="0x81FD"> <nextproto proto="#ismp"/> </case>
      <case value="0x8847" comment="mpls-unicast">
         <nextproto proto="#mpls"/>
      </case>
      <case value="0x8848" comment="mpls-multicast">
         <nextproto proto="#mpls"/>
      </case>
    </switch>
  </encapsulation>

  <visualization>
    <showsumtemplate name="ethernet">
      <section name="next"/>
      <text value="Eth: "/>
      <protofield name="src" showdata="showvalue"/>
      <text value=" => "/>
      <protofield name="dst" showdata="showvalue"/>
    </showsumtemplate>
  </visualization>

</protocol> <!-- End Ethernet protocol definition -->

<!--
NetPDL description of the VLAN Protocol
-->
<protocol name="vlan" longname="Virtual LAN (802.3ac)" showsumtemplate="vlan">
  <format>
    <fields>
      <block name="vlan" size="2" longname="Tag Control Information">
        <field type="bit" name="pri" longname="User Priority"
          mask="0xE000" size="2" showtemplate="FieldHex"/>
        <field type="bit" name="cfi" longname="CFI"
          mask="0x1000" size="2" showtemplate="FieldDec"/>
        <field type="bit" name="vlanid" longname="VLAN ID"
          mask="0x0FFF" size="2" showtemplate="FieldDec"/>
      </block>
    <field type="fixed" name="type" longname="Ethertype - Length"
      size="2" showtemplate="eth.typelength"/>
    </fields>
  </format>

  <encapsulation>
    <switch expr="buf2int(type)">
      <case value="0" maxvalue="1500"> <nextproto proto="#llc"/> </case>
      <case value="0x800"> <nextproto proto="#ip"/> </case>
      <case value="0x806"> <nextproto proto="#arp"/> </case>
      <case value="0x8863"> <nextproto proto="#pppoed"/> </case>
      <case value="0x8864"> <nextproto proto="#pppoe"/> </case>
```

```
      <case value="0x86DD"> <nextproto proto="#ipv6"/> </case>
    </switch>
  </encapsulation>

  <visualization>
    <showsumtemplate name="vlan">
      <text value=" (VLAN-ID "/>
        <protofield name="vlanid" showdata="showvalue"/>
      <text value=")"/>
    </showsumtemplate>
  </visualization>

</protocol> <!-- End VLAN protocol definition -->

<!- snip - code removed ... -->

<!--
NetPDL description of the IPv6 Protocol
-->
<protocol name="ipv6" longname="IPv6 (Internet Protocol version 6)
  showsumtemplate="ipv6">
  <!-- We should check that 'version' is equal to '6' -->
  <execute-code>
    <after>
      <!-- Store ipsrc and ipdst in a couple of variables for the sake of speed -->
      <!-- Hids differences between IPv4 and IPv6 for session tracking -->
      <assign-variable name="$ipsrc" value="src"/>
      <assign-variable name="$ipdst" value="dst"/>
      <if expr="$ipsrc lt $ipdst" >
        <if-true>
          <assign-variable name="$firstip" value="src"/>
          <assign-variable name="$secondip" value="dst"/>
        </if-true>
        <if-false>
          <assign-variable name="$firstip" value="dst"/>
          <assign-variable name="$secondip" value="src"/>
        </if-false>
      </if>
    </after>
  </execute-code>

  <format>
    <fields>
      <field type="bit" name="ver" longname="Version"
         mask="0xF0000000" size="4" showtemplate="FieldDec"/>
      <field type="bit" name="tos" longname="Type of service"
         mask="0x0F000000" size="4" showtemplate="FieldHex"/>
      <field type="bit" name="flabel" longname="Flow label"
         mask="0x00FFFFFF" size="4" showtemplate="FieldHex"/>
      <field type="fixed" name="plen" longname="Payload Length"
         size="2" showtemplate="FieldDec"/>
      <field type="fixed" name="nexthdr" longname="Next Header"
         size="1" showtemplate="ipv6.nexthdr"/>
      <field type="fixed" name="hop" longname="Hop limit"
         size="1" showtemplate="FieldDec"/>
      <field type="fixed" name="src" longname="Source address"
         size="16" showtemplate="ip6addr"/>
      <field type="fixed" name="dst" longname="Destination address"
         size="16" showtemplate="ip6addr"/>
```

```
    <loop type="while" expr="1">
      <!-- Loop until we find a 'break' -->
      <switch expr="buf2int(nexthdr)">
        <case value="0">
          <includeblk name="HBH"/>
        </case>
        <case value="43">
          <includeblk name="RH"/>
        </case>
        <case value="44">
          <includeblk name="FH"/>
        </case>
        <case value="51">
          <includeblk name="AH"/>
        </case>
        <case value="60">
          <includeblk name="DOH"/>
        </case>
        <default>
          <loopctrl type="break"/>
        </default>
      </switch>
    </loop>
  </fields>

  <block name="HBH" longname="Hop By Hop Option">
    <field type="fixed" name="nexthdr" longname="Next Header"
       size="1" showtemplate="ipv6.nexthdr"/>
    <field type="fixed" name="helen"
       longname="Length (multiple of 8 bytes, not including first 8)"
       size="1" showtemplate="ipv6.hbhlen"/>
    <loop type="size" expr="(buf2int(helen) * 8) + 6">
      <!-- '6' because the first two bytes are nexthdr and helen -->
      <includeblk name="Option"/>
    </loop>
  </block>

  <block name="FH" longname="Fragment Header">
    <field type="fixed" name="nexthdr" longname="Next Header"
      size="1" showtemplate="ipv6.nexthdr"/>
    <field type="fixed" name="reserved"
      longname="Reserved (multiple of 8 bytes)"
      comment="This is in multiple of 8 bytes"
      size="1" showtemplate="FieldDec"/>
    <field type="bit" name="fragment offset" longname="Fragment Offset"
      mask="0xFFF0" size="2" showtemplate="FieldDec"/>
    <field type="bit" name="res" longname="Res"
      mask="0x0004" size="2" showtemplate="FieldHex"/>
    <field type="bit" name="m" longname="M"
      mask="0x0001" size="2"  showtemplate="FieldBin"/>
    <field type="fixed" name="identification"
      longname="Identification" size="4" showtemplate="FieldDec"/>
  </block>

  <block name="AH" longname="Authentication Header">
    <field type="fixed" name="nexthdr" longname="Next Header"
      size="1" showtemplate="ipv6.nexthdr"/>
    <field type="fixed" name="payload len" longname="Payload Len"
      size="1" showtemplate="FieldDec"/>
    <field type="fixed" name="reserved" longname="Reserved"
```

```
      size="2" showtemplate="FieldDec"/>
    <field type="fixed" name="spi" longname="Security Parameters Index"
      size="4" showtemplate="FieldDec"/>
    <field type="fixed" name="snf" longname="Sequence Number Field"
      size="4" showtemplate="FieldDec"/>
  </block>

  <block name="DOH" longname="Destination Option Header">
    <field type="fixed" name="nexthdr" longname="Next Header"
      size="1" showtemplate="ipv6.nexthdr"/>
    <field type="fixed" name="helen"
      longname="Length (multiple of 8 bytes, not including first 8)"
      size="1" showtemplate="ipv6.hbhlen"/>
    <loop type="size" expr="(buf2int(helen) * 8)+6">
      <!-- '6' because the first two bytes are nexthdr and helen -->
      <includeblk name="Option"/>
    </loop>
  </block>

  <block name="RH" longname="Routing Header">
    <field type="fixed" name="nexthdr" longname="Next Header"
      size="1" showtemplate="ipv6.nexthdr"/>
    <field type="fixed" name="hlen"
      longname="Length (multiple of 8 bytes)"
      comment="This is in multiple of 8 bytes"
      size="1" showtemplate="FieldDec"/>
    <field type="fixed" name="rtype" longname="Routing Type"
      size="1" showtemplate="FieldDec"/>
    <field type="fixed" name="segment left" longname="Segment Left"
      size="1" showtemplate="FieldDec"/>
    <field type="variable" name="tsd" longname="Type Specific Data"
      expr="buf2int(hlen)" showtemplate="Field4BytesHex"/>
  </block>

  <block name="Option" longname="Option">
    <field type="fixed" name="opttype" longname="Option Type"
      size="1" showtemplate="ipv6.opttype">
    <field type="bit" name="act"
      longname="Action (action if Option Type is unrecognized)" mask="0xC0"
      size="1" showtemplate="ipv6.optact"/>
    <field type="bit" name="chg"
     longname="Change(whether or not option data can change while packet en-route)"
     mask="0x20" size="1" showtemplate="ipv6.optchg"/>
    <field type="bit" name="res" longname="Option Code" mask="0x1F"
      size="1"  showtemplate="FieldDec"/>
    </field>

    <switch expr="buf2int(opttype)">
      <case value="0">
                    <!-- No fields are present if the option is not 'Pad1'-->
      </case>
      <case value="5"><!-- Router Alert -->
        <field type="fixed" name="optlen" longname="Option Length"
          size="1" showtemplate="FieldDec"/>
        <field type="fixed" name="value" size="2" longname="Option Value"
          showtemplate="ipv6.optroutalert"/>
      </case>
      <default>
        <field type="fixed" name="optlen" longname="Option Length"
          size="1" showtemplate="FieldDec"/>
```

```
        <field type="variable" name="optval" longname="Option Value"
          expr="buf2int(optlen)" showtemplate="Field4BytesHex"/>
      </default>
    </switch>
  </block>
</format>

<encapsulation>
  <switch expr="buf2int(nexthdr)">
    <case value="4"> <nextproto proto="#ip"/> </case>
    <case value="6"> <nextproto proto="#tcp"/> </case>
    <case value="17"> <nextproto proto="#udp"/> </case>
    <!--   <case value="29"> <nextproto proto="#TP4"/> </case> -->
    <!--   <case value="45"> <nextproto proto="#IDRP"/> </case> -->
    <case value="50"> <nextproto proto="#ipsec_esp"/> </case>
    <case value="51"> <nextproto proto="#ipsec_ah"/> </case>
    <case value="58"> <nextproto proto="#icmp6"/> </case>
    <case value="89"> <nextproto proto="#ospf6"/> </case>
    <case value="103"> <nextproto proto="#pim6"/> </case>
  </switch>
</encapsulation>

<visualization>
  <showtemplate name="ipv6.nexthdr" showtype="dec">
    <showmap>
      <switch expr="buf2int(this)">
        <case value="0" how="Hop By Hop Option Header"/>
        <case value="43" show="Fragment Header"/>
        <case value="44" show="Authentication Header"/>
        <case value="51" show="Destination Option Header"/>
        <case value="60" show="Routing Header"/>
        <case value="50" show="Encapsulating Security Payload"/>
        <case value="58" show="Internet Control Message Protocol (ICMPv6)"/>
        <case value="59" show="No next Header"/>
        <default show="Upper Layer Header"/>
      </switch>
    </showmap>
  </showtemplate>

  <showtemplate name="ipv6.opttype" showtype="hex">
    <showmap>
      <switch expr="buf2int(this)">
        <case value="0" show="Pad1 Option"/>
        <case value="1" show="PadN Option"/>
        <case value="5" show="Router Alert Option"/>
        <default show="Error in IPv6 Option Type lookup"/>
      </switch>
    </showmap>
  </showtemplate>

  <showtemplate name="ipv6.optact" showtype="bin">
    <showmap>
      <switch expr="buf2int(this)">
        <case value="0" show="Skip over option"/>
        <case value="1" show="Discard packet silently"/>
        <case value="2" show="Discard packet-send ICMP"/>
        <case value="3" show="Discard packet-send ICMP if packet was unicast"/>
        <default show="Error in IPv6 Option Action lookup"/>
      </switch>
    </showmap>
```

```
    </showtemplate>

    <showtemplate name="ipv6.optchg" showtype="bin">
      <showmap>
        <switch expr="buf2int(this)">
          <case value="0" show="Option data does not change en-route"/>
          <case value="1" show="Option data may change en-route"/>
          <default show="Error in IPv6 Option Change lookup"/>
        </switch>
      </showmap>
    </showtemplate>

    <showtemplate name="ipv6.optroutalert" showtype="dec">
      <showmap>
        <switch expr="buf2int(this)">
          <case value="0" show="Datagram contains Multicast Listener Disc msg"/>
          <case value="1" show="Datagram contains RSVP message"/>
          <case value="2" show="Datagram contains an Active Networks msg"/>
          <default show="Error in IPv6 Router Alert Option lookup"/>
        </switch>
      </showmap>
    </showtemplate>

    <!-- Length of the hop by hop option header -->
    <showtemplate name="ipv6.hbhlen" showtype="dec">
      <showdtl>
        <text expr="(buf2int(this) * 8) + 8"/>
        <text value=" (field value = "/>
          <protofield showdata="showvalue"/>
        <text value=")"/>
      </showdtl>
    </showtemplate>

    <showsumtemplate name="ipv6">
      <if expr="($prevproto == #ip)  or ($prevproto == #ipv6)  or
                ($prevproto == #ppp) or ($prevproto == #pppoe) or
                ($prevproto == #gre)">
        <if-true>
          <text value=" - "/>
        </if-true>
        <if-false>
          <section name="next"/>
        </if-false>
      </if>

      <text value="IPv6: "/>
      <protofield name="src" showdata="showvalue"/>
      <text value=" => "/>
      <protofield name="dst" showdata="showvalue"/>
      <text value=" (Len " expr="buf2int(plen) + 40"/>
      <text value=")"/>
    </showsumtemplate>
  </visualization>
</protocol> <!-- End IPv6 definition -->

<!- snip - code removed ... -->

</netpdl>
```

```
<!-- End of Standard Protocol file -->
```

8.2.6.14 Custom Protocol File - GTP Protocol Example

The following "GTP_example.xml" file describes the custom GTP protocol.

```
<?xml version="1.0" encoding="utf-8"?>
<netpdl name="GTP" description="GTP-U Example">
  <!-- Gtpu program is an extension to the udp hard shell -->
  <protocol name="gtpu" longname="GTP-U" prevproto="udp">
    <!-- fields in GTP header used for validation and calculating length -->
      <format>
        <fields>
          <field type="bit"    name="flags"    mask="0xE0" size="1" />
          <field type="bit"    name="pt"       mask="0x80" size="1" />
          <field type="bit"    name="version"  mask="0x07" size="1" />
          <field type="fixed"  name="mtype"    size="1" longname="message type"/>
          <field type="fixed"  name="length"   size="2" />
          <field type="fixed"  name="teid"     size="4" />
          <field type="fixed"  name="snum "    size="2" longname="sequence number"/>
          <field type="fixed"  name="npdunum"  size="1" longname="N-PDU number"/>
          <field type="fixed"  name="next"     size="1" longname="Next ext header type"/>
      </fields>
    </format>

    <execute-code>
      <!-- Check that UDP port is 2152 -->
      <before confirm="yes">
        <if expr="udp.dport == 2152">
          <if-true>
          </if-true>
          <if-false>
          <!-- Confirms UDP layer and exits-->
            <action type="exit" confirm="yes" advance="no" nextproto="return"/>
          </if-false>
        </if>
      </before>

      <!-- Done after UDP layer is confirmed-->
      <!--Check version and calculate length-->
      <after confirm="no">
        <if expr="version == 1">
          <if-true>
            <assign-variable name="$shimoffset_1" value="$NxtHdrOffset"/>
          </if-true>
          <if-false>
            <assign-variable name="$ShimR" value="0x23"/>
            <action type="exit" confirm="no" confirmcustom="no" nextproto="none"/>
          </if-false>
        </if>

        <if expr="flags != 0">
          <if-true>
            <assign-variable name="$NxtHdrOffset" value="$shimoffset_1+12"/>
          </if-true>
          <if-false>
            <assign-variable name="$NxtHdrOffset" value="$shimoffset_1+8"/>
```

```
          </if-false>
        </if>
        <action type="exit" confirm="no" confirmcustom="shim1" nextproto="none"/>
      </after>
    </execute-code>
  </protocol>
</netpdl>
```

8.2.7 Security Engine (SEC)

SEC Device Driver for DPAA1

Introduction

Current chapter is focused on DPAA1-specific SEC details - Queue Interface (QI) backend and frontend drivers. More information is provided in chapter Security Engine (SEC), including:

- JRI - the common Job Ring Interface (on which QI is currently dependent)
- crypto algorithms supported by each backend (RI, JRI, QI, DPSECI)
- kernel configuration - how to build backend and frontend drivers
- how to make sure the algorithms registered successfully
- how to check that crypto requests are being offloaded on SEC engine

On SoCs with DPAA v1.x, QI backend can be used to submit crypto API service requests from the frontend drivers.
The corresponding frontend compatible with QI backend is *caamalg_qi*, which supports symmetric encryption and AEAD algorithms-based crypto API service requests.

The Linux driver automatically sets the enable bit for the SEC hardware's Queue Interface (QI), depending on QI feature availability in the hardware. This enables the hardware to also operate as a DPAA component for use by e.g., USDPAA apps. This behaviour does not conflict with normal in-kernel job ring operation, other than the potential performance-observable effects of internal SEC hardware resource contention, and vice-versa.

Device Tree binding

There is no device tree node corresponding to SEC DPAA1. A platform device is created dynamically at runtime, as a child of the *crypto* node.

Module loading

Both QI backend and frontend drivers can be compiled either built-in or as modules. If compiled as modules, QI backend driver is (part of) the *caam* module, while the corresponding frontend driver is the *caamalg_qi* module.

Verifying driver operation and correctness

Other than noting the performance advantages due to the crypto offload, one can also ensure the hardware is doing the crypto by looking for driver messages in dmesg.

The driver emits console message at initialization time:

```
platform caam_qi: algorithms registered in /proc/crypto
```

If the message is not present in the logs, either the driver is not configured in the kernel, or no SEC compatible device tree node is present in the device tree.

Another option is to examine the hardware statistics registers in debugfs.

Incrementing IRQs in /proc/interrupts

Given a time period when crypto requests are being made, the SEC hardware will fire completion notification interrupts on the corresponding QMan (Queue Manager) portal IRQ:

```
$ cat /proc/interrupts | grep QMan
           CPU0       CPU1       CPU2       CPU3
[...]
 21:          0          0          0         22     GICv2 214 Level     QMan portal 3
 22:          0          0         61          0     GICv2 216 Level     QMan portal 2
 23:          0         29          0          0     GICv2 218 Level     QMan portal 1
 24:        273          0          0          0     GICv2 220 Level     QMan portal 0
```

If the number of interrupts fired increment, then the hardware is being used to do the crypto.

If the numbers do not increment, then first check the algorithm being exercised is supported by the driver. If the algorithm is supported, there is a possibility that the driver is in polling mode (NAPI mechanism) and the hardware statistics in debugfs (inbound / outbound bytes encrypted / protected - see below) should be monitored.

Note: CAAM driver might be sharing the QMan portal with other drivers in the system; meaning that the interrupt counters shown in /proc/interrupts are for all drivers sharing the portal.

Verifying the 'self test' fields say 'passed' in /proc/crypto

An entry such as the one below means the driver has successfully registered support for the algorithm with the kernel crypto API:

```
name         : cbc(aes)
driver       : cbc-aes-caam-qi
module       : kernel
priority     : 2000
refcnt       : 1
selftest     : passed
internal     : no
type         : givcipher
async        : yes
blocksize    : 16
min keysize  : 16
max keysize  : 32
ivsize       : 16
geniv        : <built-in>
```

Note that although a test vector may not exist for a particular algorithm supported by the driver, the kernel will emit messages saying which algorithms weren't tested, and mark them as 'passed' anyway:

```
[...]
alg: No test for authenc(hmac(md5),cbc(aes)) (authenc-hmac-md5-cbc-aes-caam-qi)
alg: No test for echainiv(authenc(hmac(md5),cbc(aes))) (echainiv-authenc-hmac-md5-cbc-aes-caam-qi)
alg: No test for echainiv(authenc(hmac(sha1),cbc(aes))) (echainiv-authenc-hmac-sha1-cbc-aes-caam-qi)
alg: No test for authenc(hmac(sha224),cbc(aes)) (authenc-hmac-sha224-cbc-aes-caam-qi)
[...]
alg: No test for echainiv(authenc(hmac(sha384),cbc(des))) (echainiv-authenc-hmac-sha384-cbc-des-caam-
qi)
alg :No test for echainiv(authenc(hmac(sha512),cbc(des))) (echainiv-authenc-hmac-sha512-cbc-des-caam-
qi)
[...]
```

Supporting Documentation

General SEC information, Job Ring Interface (JRI):Security Engine (SEC)

DPAA2-specific SEC details - Data Path SEC Interface (DPSECI):Security Engine (SEC)

8.2.8 Decompression Compression Engine (DCE)

Description

The following section describes the DCE software running on the DCE hardware block that is part of the QorIQ family of SoCs.

Linux

The DCE driver software includes a Linux kernel driver. The driver provides a set of kernel level APIs.

The driver includes the following functionality:

DCE Kernel Driver Interface

The DCE kernel driver APIs provide a callback based interface to the DCE. The driver provides APIs to perform either stateless (chunk) based (de)compression or stateful (stream) based (de)compression. The driver internally co-ordinates commands to the DCE and corresponding results from the DCE. The chunk interface is meant for inline (de)compression where each DCE operation is on a complete and independent piece of information. The stream interface is is designed to (de)compress many related pieces of information (e.g. a file).

DCE FLIB interface

The DCE FLIB interface provides a consistent interface to the CCSR registers, the memory defined DMA structures and to the dce_flow software object.

DCE Configuration interface

The DCE configuration interface is an encapsulation of the DCE CCSR register space and the global/error interrupt source. This is expected to be managed only by (and visible to) a control-plane operating system,

DCE User-space Interface

There is a debugfs interface available for device debugging. No other userspace interface is available. Debugfs provides easy access to DCE memory map registers space. See the *DPAA Reference Manual* for the “DCE Individual Register Memory Map”. e.g.

```
0x000 DCE_CFG — DCE configuration
0x03C DCE_IDLE— DCE Idle status Register
0x3F8 DCE_IP_REV_1 — DCE IP Block Revision 1 register
```

Mount debugfs to explore DCE status:

```
mount -t debugfs none /sys/kernel/debug
root@t4240qds:/dev/shm# cat /sys/kernel/debug/dce/ccsrmem_addr
DCE register offset = 0x0
root@t4240qds:/dev/shm# cat /sys/kernel/debug/dce/ccsrmem_rw
DCE register offset = 0x0
value = 0x00000003        <-DCE configuration, x03= Enable. Block is operational, Frame Queues
are consumed.
root@t4240qds:/dev/shm# echo 0x03c > /sys/kernel/debug/dce/ccsrmem_addr
root@t4240qds:/dev/shm# cat /sys/kernel/debug/dce/ccsrmem_rw
DCE register offset = 0x3c
value = 0x00000001        <- DCE Idle status Register, 1 = idle
root@t4240qds:/dev/shm# echo 0x3f8 > /sys/kernel/debug/dce/ccsrmem_addr
root@t4240qds:/dev/shm# cat /sys/kernel/debug/dce/ccsrmem_rw
DCE register offset = 0x3f8
value = 0x0af00101        <-match default value of “0x0AF0_0101”
```

Functionality

Configuration

The DCE device is configured via device-tree nodes and by some compile-time options controlled via Linux's Kconfig system. See the “DCE Kernel Configure Options” section for more info.

Debugfs Interface

The DCE has a debugfs interface available to assist in device debugging. The code can be built either as a loadable module or statically.

Module Loading

The driver can be statically built or as a dynamically loadable module.

DCE Kernel Configure Options

Common Kernel Configure Options	Description
CONFIG_STAGING	Required in order to make “staging” drivers such as DCE available.
CONFIG_FSL_DCE	Required to build DCE support.
CONFIG_FSL_DCE_CONFIG	Compiles in dce device driver support.
CONFIG_FSL_DCE_DEBUGFS	Compiles in support for debugfs interface for the DCE.
CONFIG_FSL_DCE_TESTS	Compiles DCE test code.

Compile-time Configuration Options

The "Kernel Configure Options" above describe the compile-time configuration options for the kernel.

Source Files

Linux

Source Files	Description
drivers/staging/fsl_dce/fsl_dce_chunk.h	The DCE driver APIs for chunk based (de)compression
drivers/staging/fsl_dce/fsl_dce_stream.h	The DCE driver APIs for stream based (de)compression
drivers/staging/fsl_dce/flib/*.*	The DCE flib interface
drivers/staging/fsl_dce/flib/dce_regs.h	The DCE CCSR register macros. Used in conjunction with bitfield_macros.h macros.
drivers/staging/fsl_dce/flib/dce_defs.h	The DCE dma defined memory structures.
drivers/staging/fsl_dce/flib/dce_flow.h	Object which defines the transport mechanism with the DCE engine. This object encompasses the QMan frame queues required to communicate with the DCE. The chunk and stream object use the flow object as a base.
drivers/staging/fsl_dce/dce_debugfs.*	The DCE debugfs interface
drivers/staging/fsl_dce/tests/performance_simple/*.*	Test which demontrates the DCE throughput performance using single input files. Refer to local README file for more details.

Build Procedure

The procedure is a standard SDK build.

Test Procedure

Refer to drivers/staging/fsl_dce/tests/performance_simple/README for detailed descriptions of sample DCE throughput performance test.

Known Bugs, Limitations, or Technical Issues

- The APIs have been tested in the context of the performance test applications.
- It is possible that in future releases additions and or modification to APIs may occur.

8.3 DPAA2-specific Software

8.3.1 DPAA2 Software Overview

8.3.1.1 Introduction

The following section provides an overview of the software and tools for the DPAA2 networking hardware that is provided on NXP SoCs such as LS2088A and LS1088A. These SoCs are called "DPAA2 SoCs" because they contain the hardware that is required to support the DPAA2 networking architecture. This hardware includes Queue Manager/Buffer Manager (QBMan), the Wire Rate I/O Processor (WRIOP), and the Management Complex (MC).

DPAA2 is an architecture in which some facilities (and thus the hardware that supports them) are optional. For this reason, this document may describe features that are not available on all DPAA2 SoCs.

DPAA2 in the Layerscape SDK

NXP provides a Linux-based software development kit (SDK) for SoCs. The core of the SDK is an embedded-oriented Linux distribution containing components such as:

- U-Boot boot loader
- Linux kernel with networking support
- GNU tool chain for Armv8
- Large set of standard Linux user space packages including shells, initialization scripts, and servers
- Yocto-based package management in an embedded-style source-based Linux distribution

NXP supports and builds upon standard Linux with drivers and additional packages and capabilities including support for the DPAA2 networking hardware such as:

- Management complex firmware for the DPAA2 architecture. DPAA2 is a networking peripheral subsystem architecture and will be discussed at length in later sections.
- Restool: a DPAA2 object management tool
- A DPAA2 Linux Ethernet driver
- Linux kernel support for treating DPAA2 containers as plug-and-play buses with VFIO support
- Integrated kernel-based control of DPAA2 L2 switch objects
- Kernel support for DPAA2 acceleration objects including cryptographic offload

8.3.1.2 DPAA2 Hardware

8.3.1.2.1 Introduction

This section introduces the DPAA2 hardware components and explains their relationship to the DPAA hardware found on previous NXP SoCs. Finally, it shows the DPAA2 hardware blocks in the context of a specific SoC, LS2088A, LS1088A.

Note that the DPAA2 hardware is configured via DPAA2 objects as will be described below. This section on hardware provides background information to give context to the discussion of the DPAA2 objects. Most developers will deal with the DPAA2 objects and not directly with all aspects of the DPAA2 hardware blocks.

8.3.1.2.2 DPAA2 hardware

The DPAA2 hardware provides network interfaces, hardware-based queuing, layer 2 switching, more general switching, networking-related accelerators, and also memory dedicated to packet processing.

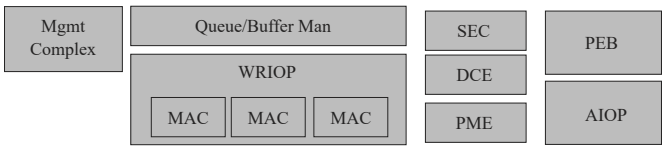

Figure 123. DPAA2 hardware components

The DPAA2 hardware contains the following components:

Management Complex (MC)

The DPAA2 hardware is abstracted by DPAA2 objects with the help of the Management Complex. This means that users need not study the details of the DPAA2 hardware blocks in order to develop drivers for or use DPAA2 capabilities. This software and solution oriented focus is one of the key differences between the first DPAA and DPAA2.

Queue and Buffer Manager (QBMan)

QBMan provides hardware-based buffer and queue management.

WRIOP

WRIOP provides hardware that serves as the basis for network interfaces. It includes Ethernet MACs, packet header key generators, parsers, table look up units, and an interface to the buffer and queue managers.

Accelerators (optional)

Accelerators that interface to QBMan are a key part of DPAA2. They include a cryptographic and security accelerator (SEC), a pattern matching accelerator (PME), a data compression/decompression accelerator (DCE), and a generic DMA engine. The set of accelerators may vary from SoC to SoC and new types of accelerators may be added.

PEB (optional)

PEB is a memory devoted to high-performance packet processing. It can be used to store in-flight packets and other items.

AIOP (optional)

AIOP is a fully programmable multicore engine with tightly coupled hardware accelerators that is specialized for efficient packet processing. It uses techniques somewhat similar to hardware multithreading to provide multiple "tasks" per core. The hardware supports efficient task switching to hide latencies associated with using accelerators and other hardware. The AIOP supports C language programming. It is optional in the DPAA2 architecture and thus is not available on all DPAA2 SoCs.

DPAA2 versus DPAA

DPAA2 is the latest generation of the Datapath Acceleration Architecture (DPAA) hardware. It is an evolution of the DPAA present in previous SoCs.

DPAA2 changes relative to DPAA include:

- DPAA2 contains a hardware block called the Management Complex. It facilitates and simplifies hardware resource allocation and hardware configuration.

- The hardware buffer and queue managers (QMan and BMan) are integrated into a single hardware block called QBMan.
- DPAA2 session context can be maintained per frame, rather than per frame queue, which allows multiple accelerator sessions to share a single frame queue pair. This single frame queue pair then reduces the number of frame queues needed, making session establishment more efficient because frame queues do not need to be initialized per session.
- Software portals are enhanced to make it easier and more efficient for General Purpose Processing (GPP) core software to share them.
- WRIOP in DPAA2 replaces FMan as the hardware block that provides Ethernet interfaces. WRIOP is designed to be more partitionable, in that it allows GPP software to more independently manage separate network interfaces.
- WRIOP and QBMan contain new features that support autonomous L2 switching functionality:
  - WRIOP: L2 address learning and forwarding unit.
  - QBMan: packet replication facility.
- WRIOP does not contain a generic programmable engine like the one present in FMan, and instead DPAA2 has a new hardware block called AIOP that is specifically designed to perform this function.

8.3.1.2.3 LS2088A block diagram

The LS2088A is an Armv8-A 64-bit SoC. It contains eight Arm Cortex-A57 cores and numerous peripherals. The LS2088A is an example of a DPAA2 SoC because it contains the required DPAA2 hardware blocks: WRIOP, QBMan, and MC.

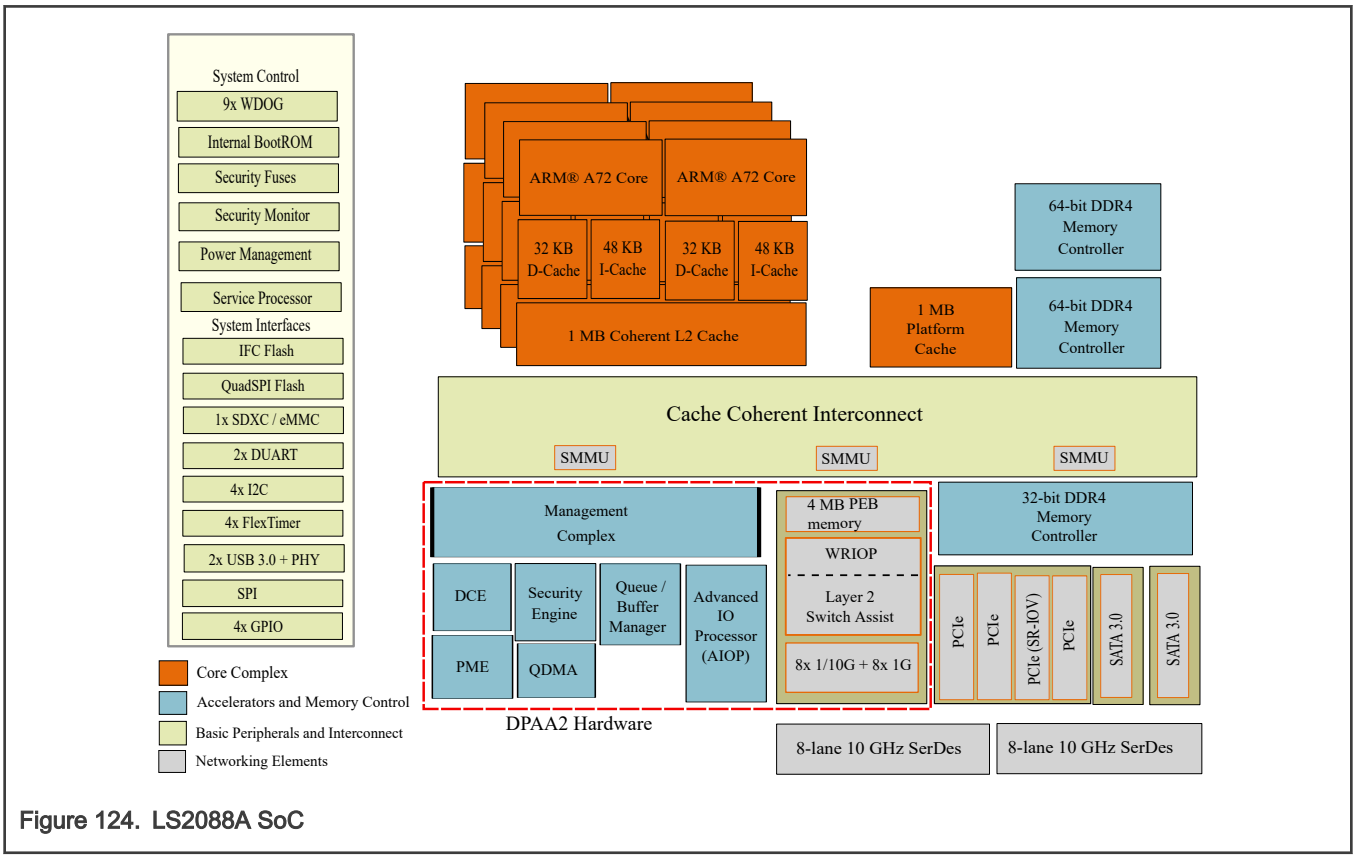

Figure 124. LS2088A SoC

The LS2088A contains standard-Arm components in addition to the cores, such as:

- Arm generic timer
- GIC-500 interrupt controller
- MMU-500 System Memory Management Unit (I/O MMU)

It also contains conventional hardware blocks including:

- DDR controllers
- Flash controller
- SDxC/eMMC controller
- USB controller
- PCIe controller
- SATA controller
- Other blocks visible in the diagram.

Finally, the following DPAA2 components are highlighted in the figure:

- QMan/BMan: hardware queue and buffer management
- WRIOP: Ethernet interfaces
- Management complex: DPAA2 objects and their management
- Accelerators: SEC, PME, and DCE

8.3.1.3 DPAA2 Linux Software

8.3.1.3.1 Introduction

This section provides a high-level summary of the most important DPAA2 software associated with the Linux operating system.

8.3.1.3.2 Linux and DPAA2

This section summarizes major Linux DPAA2 software. See Linux DPAA2 software which shows the software in relation to some standard Linux software.

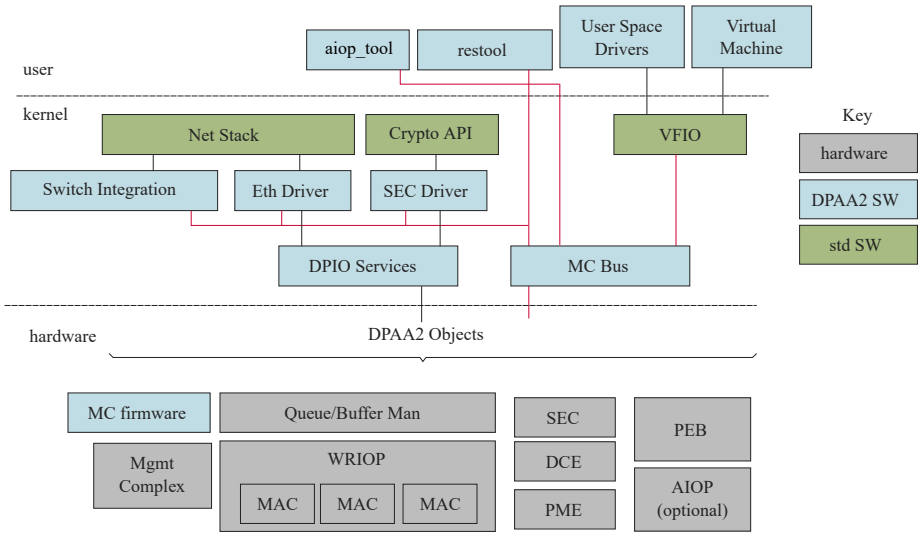

Figure 125. Linux DPAA2 software

Ethernet Driver

DPAA2 software includes a conventional Ethernet driver for use by the Linux network stack. This driver is controlled via standard Linux means such as the "ifconfig" or "ip" commands and also "ethtool". It operates in a manner that will be familiar to Linux users. Drivers in DPAA2 manage DPAA2 "objects" as will be described below. These objects are best regarded as hardware. They are formed from hardware resources.

DPIO Services

DPAA2 drivers such as the Ethernet driver in the Linux kernel use the DPIO services Linux component to do I/O. The DPIO services layer manages the kernel's DPIO objects. DPIO objects contain DPAA2 software portals (which are hardware components). The software portals can be shared by multiple higher-level drivers.

DPAA2 Objects and Management Complex (MC) Firmware

The DPAA2 hardware is presented to software in terms of DPAA2 objects that are realized by means of firmware running on the Management Complex. This will be explained in depth in DPAA2 Networking Subsystem Deeper Dive and also immediately below.

MC Bus and Restool

The DPAA2 objects appear as devices on a special software-defined bus called the MC bus. Linux has a driver for this bus (and interactions with VFIO). This software is analogous to PCIe bus software. Like PCIe, the MC bus supports plug and play.

The "restool" utility is a Linux user space command that allows DPAA2 objects to be managed: created, destroyed, queried for status, etc.

SEC Driver

The SEC driver provides the standard Linux kernel cryptographic API but implemented by the SEC hardware by means of a special DPAA2 object. Other accelerators can be handled in the same way, but Linux tends to not provide standard (hardware-independent) kernel-level APIs for them so they are not discussed here.

Switch Integration

Finally, DPAA2 objects exist that perform L2 and more general network switching. These hardware elements can be configured using standard Linux mechanisms such as "bridge". As will be discussed later, there are two types of switch-related DPAA2 objects: DPSW and DPDMUX. There is kernel-based management support for both.

AIOP Tool

AIOP Tool (aiop_tool) is a user space command line utility that allows programs (images) to be loaded onto the AIOP and started. It also supports stopping and resetting the AIOP. Of course, aiop_tool is used only on DPAA2 SoCs that have an AIOP.

It is also possible for user space programs to manage these aspects of AIOP via programmatic means. The aiop_tool utility is most useful during development of AIOP software and for AIOP applications that happen not to be tightly integrated with control software running in user space on the GPP cores.

From the point of view of software running on the GPP cores, AIOP programs may be thought of as firmware that defines the functionality that the AIOP will provide to an overall system.

.

8.3.1.3.3 DPAA2, Management Complex, and drivers

DPAA2 is the architecture that describes network interfaces and other networking services for an SoC with DPAA2 hardware. It is discussed in depth in DPAA2 Networking Subsystem Deeper Dive. For now, think of DPAA2 as hardware for networking that is presented in terms of DPAA2 objects. The objects provide specific high-level features or services such as network interfaces or L2 switches.

The objects are managed by means of firmware running on a hardware block called the Management Complex. Software on general purpose cores must load firmware onto the Management Complex before networking can be done using DPAA2 hardware.

Normally, the MC firmware is loaded early in the boot process so that boot loaders can make use of DPAA2 objects and peform networking operations such as network-based booting.

Since the objects represent hardware, they require driver software on general purpose cores. NXP provides drivers for U-Boot and standard Linux and thus both support Ethernet networking out of the box. For example, one can use Linux networking without delving into the details of DPAA2 and its objects just as one can use Linux networking via a PCIe Ethernet card (whose manufacturer provides a driver) without delving into the design of the card.

DPAA2 and its objects are fully documented so it is possible to write drivers for other operating systems, applications, or boot loaders, e.g. DPDK, UEFI firmware, etc. Many of these drivers exist or are roadmap items.

8.3.1.3.4 DPAA2 and plug-and-play

There is another analogy between DPAA2 objects and PCIe devices. PCIe devices appear to operating systems as plug-and-play devices on a bus. The operating system can scan the bus to discover and identify the devices on it. It can then use the device identities to associate drivers with devices and bring them into service.

DPAA2 objects work in a similar way. They are placed into datapath containers (DPRC) that can be scanned in an analogous manner. Then objects are associated with drivers and placed into service.

The Linux kernel is provided with a container with its DPAA2 objects. Containers can also be provided to other software including virtual machines and even arbitrary user space processes. This is how the hardware that objects encapsulate can be directly assigned to virtual machines and user space processes. This allows them highly efficient access to hardware but in a secure fashion due to the involvement of the SoC IO-MMU.

This, also, is analogous to PCIe devices in standard Linux; DPAA2 objects can be directly assigned to virtual machines and user space processes using a standard Linux architecture called VFIO which allows devices to be mapped into the address space of user space processes and also enables IO-MMU configuration to constrain the memory to which devices can read and write data via their DMA engines.

Like PCIe devices, DPAA2 objects are also mapped using VFIO. NXP supplies the extensions to VFIO in Linux that makes this possible.

8.3.1.3.5 Datapath layout files and restool

As mentioned elsewhere, DPAA2 containers are like PCIe busses in that they can be scanned for objects/devices. But containers and PCIe busses are populated very differently. PCIe busses are populated physically, e.g. by plugging a card into a slot.

Objects are encapsulations of DPAA2 hardware resources that must be created via management complex firmware and then assigned to a container. There are several ways to do this:

1. the datapath layout file
2. restool
3. Management Complex commands

Datapath layout (DPL) file

Containers and objects can be defined statically in a file called a datapath layout file (DPL) that is passed to the management complex when it is initially booted. The DPL can specify containers, objects, and connections between objects. When an OS such as Linux boots, it will discover the populated containers.

restool

The utility called “restool” is a NXP-created Linux user space command that allows inspection and dynamic management of containers and objects. With it, one can

- Display the current set of containers and objects
- Create and destroy containers
- Create and destroy objects
- Assign objects to containers
- Create links among objects

One can use a sequence of restool command invocations to create the same container and object state that a DPL might specify. The difference is that restool is dynamic.

Management Complex commands

Finally, objects and containers can be manipulated by software running on general purpose cores by sending commands to the Management Complex. This is, in fact, what restool does. Command line arguments to restool define an operation. The restool utility simply forms a command and passes it to the Management Complex. Other drives can also do this.

8.3.1.4 DPAA2 Networking Subsystem Deeper Dive

This section provides additional detail on the DPAA2 architecture and the DPAA2 object services paradigm.

This paradigm simplifies using the DPAA2 hardware IP blocks through abstraction and encapsulation. DPAA2 objects are objects in the sense that they:

- Encapsulate specific abstract functionality, e.g. L2 switching.
- Are composed of allocated hardware sub-components of the DPAA2 hardware peripherals, and then mostly abstract their functionality .
- Present functionality in terms of specific attributes and methods, meaning operations on the objects.

NOTE

DPAA2 objects are not associated with object-oriented programming languages, instead they are collections of hardware resources allocated for a specific purpose. General purpose processing (GPP) core software can configure objects by sending them commands expressed in terms of hardware-level descriptors. GPP software can also include C language functions that prepare and interpret the descriptors. No use of object-oriented programming languages is required. For the most part, Linux drivers are written in C as usual

This section:

- Presents the DPAA2 object model at a concept level and describes how objects are created, destroyed, conveyed, configured, and used
- Lists the objects types and their purposes
- Outlines how the Management Complex implements and provides the objects
- Explains what software components use the various DPAA2 object types, and how they use them. The users are often application software running on general purpose processors (cores) or on the optional AIOP.

Driver-level software on GPPs works with the abstracted objects, rather than directly with the hardware. For example, the GPP software deals with L2 switch and network interface objects rather than WRIOPs .

DPAA2 objects express and abstract the DPAA2 hardware into software-managed objects that are:

- Application-oriented in terminology and use, rather than hardware-oriented
- Based on concepts that are generally familiar to programmers and system architects
- Simpler than direct management of the hardware
- Indicate the architectural intent of the hardware blocks

DPAA2 object services are provided by software that runs as firmware on a DPAA2 hardware block called the Management Complex. Users do not need to program the Management Complex in order to use the Network Object Services; they simply use the NXP-supplied firmware. This firmware runs on the Management Complex instead of a general purpose core in order to simplify the integration of the NXP software with customer software. DPAA2 object concept below shows at a concept level how the Management Complex provides objects that perform specific services; the objects have attributes and interfaces that appear as hardware.

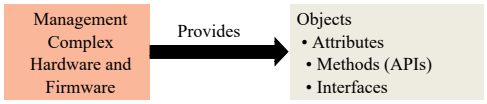

Figure 126. DPAA2 object concept

8.3.1.4.1 DPAA2 hardware abstraction example

This section introduces the DPAA2 objects and the abstractions they provide by means of an example. Example scenario shows a system constructed using the DPAA2 hardware on a DPAA2 SoC such as the LS2088A. The goal is to run two KVM virtual machines (VMs) on the SoC. The two virtual machines each have a hardware network interface that they can directly access (i.e. a dedicated interface) connected to a DPAA2 L2 switch. These VMs can communicate with each other via the L2 switch, and they can communicate externally via the MAC on the L2 switch. So, the L2 switch has three ports, one for an off-SoC connection (connected to a MAC), and two for the VMs.

In addition, there are two network interfaces with MAC addresses for off-SoC communication that are used by the host Linux. The host Linux instance and the virtual machines all run on the Cortex-A72 cores on the LS2088A. In this example, each network interface is associated with an Ethernet driver working with Linux.

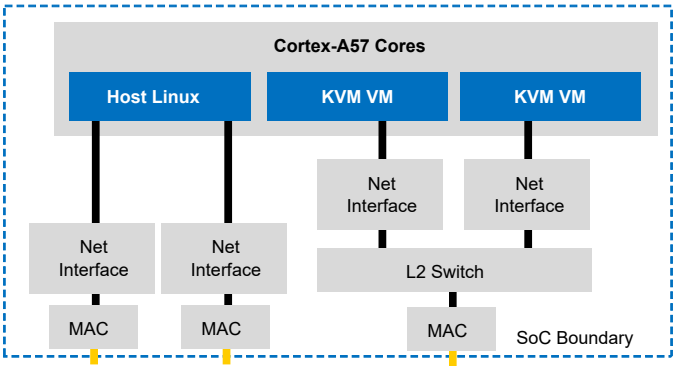

Figure 127. Example scenario

DPAA2 hardware shows the DPAA2 hardware blocks. This figure bears little resemblance to Example scenario. It provides little guidance to how the example scenario could be realized because the hardware blocks are conceptually distant from a natural statement of what is desired in the example. The DPAA2 objects are much closer, as will be seen below.

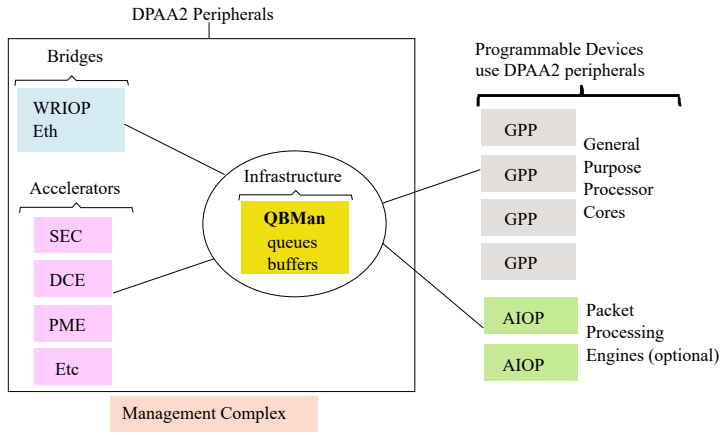

Figure 128. DPAA2 hardware

Example scenario based on DPAA2 objects shows how the example can be realized using the DPAA2 object abstractions of the DPAA2 hardware; this figure is much closer to the goal expressed in Example scenario and its components are described below:

- The host Linux is shown in more detail on the left. The network stack and two instances of the Ethernet drivers appear in the figure above the hardware boundary. Also, the figure shows the stacks and drivers for the two virtual machines.
- The DPAA2 objects appear below the hardware boundary
- The DPNI (Datapath Network Interface) objects correspond directly to the network interfaces in Example scenario. The DPSW (Datapath Switch) object corresponds to the L2 switch.
- The DPMAC (Datapath MAC) objects represent Ethernet MACs within WRIOP. These are hardware components that connect to PHY hardware, and provide Ethernet physical layer termination, i.e. Ethernet connections to the SoC.
- The DPIO (Datapath I/O) objects include QBMan software portals, and they allow GPP core software to read and write packets from the DPNIs. DPIOs are described in more detail later in this document.

See Object summary for a summary of the DPAA2 objects.

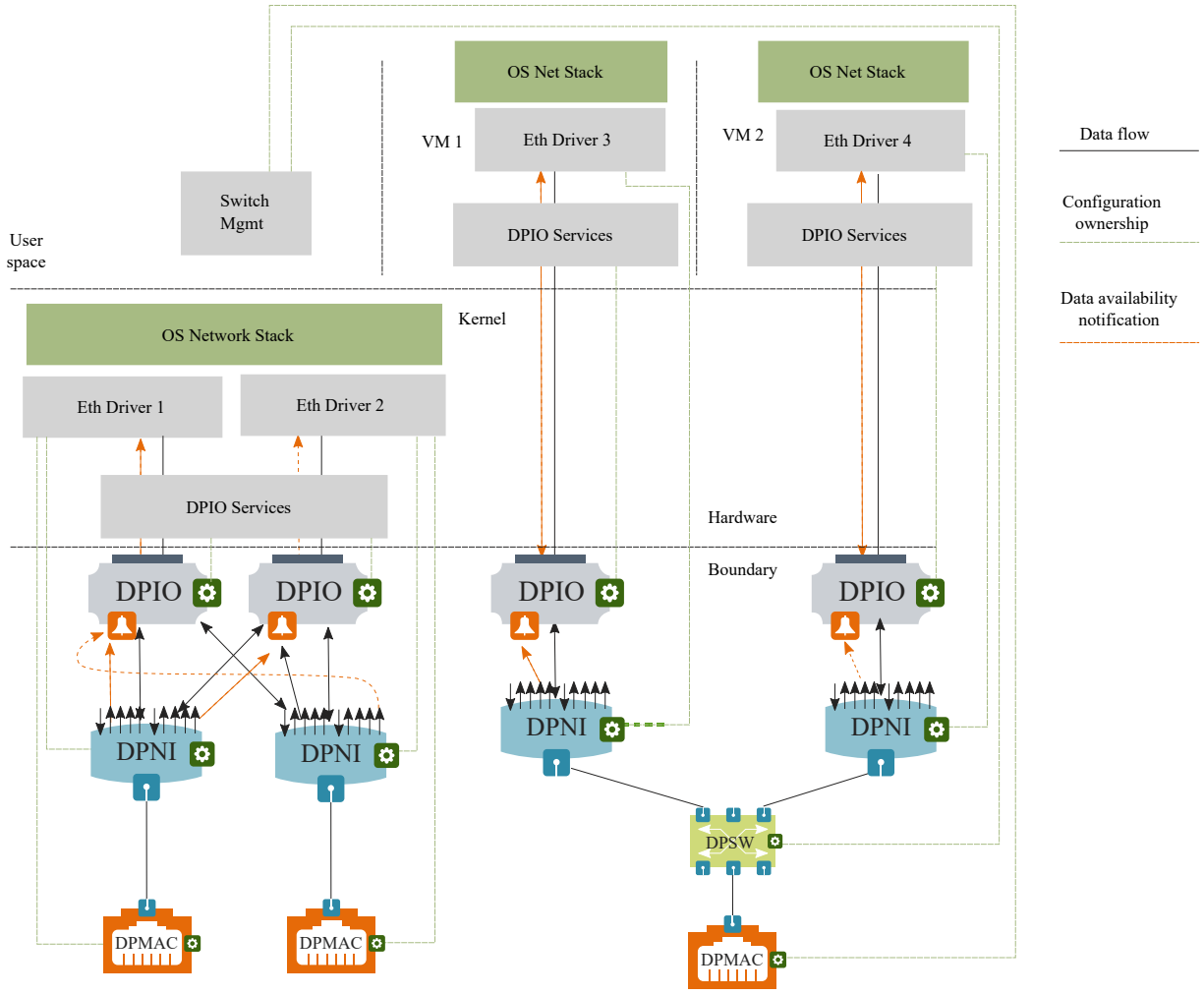

Figure 129. Example scenario based on DPAA2 objects

Objects are partitioned among software owners

Software management of DPAA2 objects is distributed. Software components that use a particular set of objects independently manage the objects in their set. The green boxes on the object icons in Example scenario based on DPAA2 objects represent management interfaces, and the green dashed lines show what software component owns the management of each object. For example, the DPSW is shown as managed by switch management software running on the general purpose processing cores.

Objects can be directly assigned

The virtual machines directly access and manage the objects their software uses, and they do this with minimal host kernel involvement; this enhances efficiency while preserving access isolation. In the figure, the virtual machines have directly assigned hardware-based network interfaces.

DPNI objects provide network interfaces

DPNI objects interact with drivers to allow software to send and receive network frames, usually Ethernet frames. DPNIs are central to DPAA2's concept of network interfaces, but they do not act alone. In general, network drivers manage several objects as

part of managing network interfaces. DPNI ingress shows a high-level outline of DPNI ingress frame processing, and the following steps give insight into how objects work together.

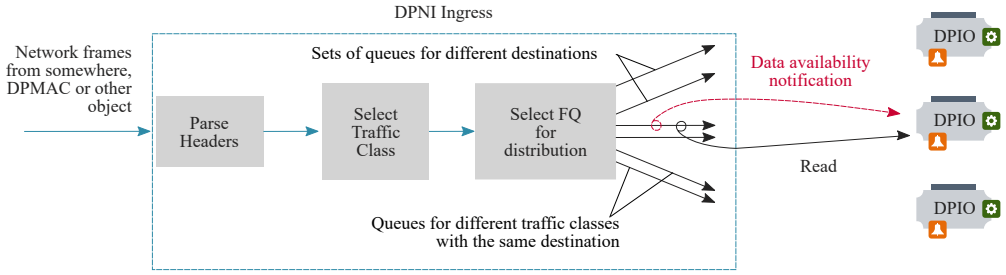

Figure 130. DPNI ingress

1. A frame arrives at DPNI from another object, a MAC (DPMAC), a switch (DPSW) or other object.
2. DPNI parses the packet to locate the header from which lookup keys can be generated.
3. A lookup selects a traffic class (priority) for the frame; this priority causes a specific set of queues (implemented as QMan frame queues) to be selected.
4. DPNI must select a destination for the frame, using either another lookup or an RSS-style hashing operation; this lookup causes a specific queue within the previously selected set to be selected.
5. The frame is enqueued onto the queue, and the queue represents the destination indirectly. At this point, DPIO objects enter the process.
6. Every queue is configured to deliver data availability notifications to a specific DPIO, and these notifications tell the driver software using the DPIO that one or more frames are available to read from a specific queue.
7. Driver software responds by using a DPIO (actually any of its DPIOs) to read a burst of one or more frames from the queue.

Egress is simpler. The driver software uses a DPIO to enqueue a frame to a specific egress queue within DPNI; the queue is selected based on the desired traffic class.

Multiple DPIOs provide parallelism

It is common to assign queues in network interfaces to specific cores, and then to distribute the traffic between them using techniques like RSS or explicit flow steering. DPAA2 supports this process by using multiple DPIOs. See DPIO parallelism for an example involving a single network interface and two cores.

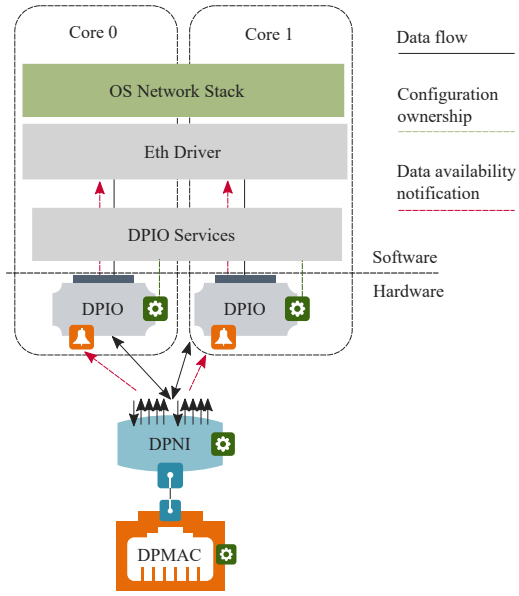

Figure 131. DPIO parallelism

The DPNI is configured so that each of its egress queues send its data availability notifications to one DPIO or another in a balanced way. A core receives an interrupt from its DPIO telling it to read a data availability notification, and then it then uses its DPIO to read a burst of one or more frames. In Linux terms, it starts a NAPI burst.

DPIO services

Notice in Example scenario based on DPAA2 objects that the host operating system on the left has two network interfaces. It has two DPIOs also, but either DPIO can be used for I/O to either of the interfaces. DPIOs are designed to be shared across network interfaces that belong to the same software component, such as the Linux kernel. For this reason, the Linux kernel contains a software layer called DPIO Services that facilitates driver instances performing I/O from a resource that might be shared across a network interface, and also might be shared across cores or software threads. Giving more DPIOs to the DPIO Services layer can increase performance, and using the same DPIO on a core for more than one network interface need not decrease performance because each core is physically able to do only one thing at a time.

8.3.1.4.1.1 Object summary

This section summaries the DPAA2 objects and shows a standard icon for each used in the illustrations that follow. See DPAA2 object summary and icons.

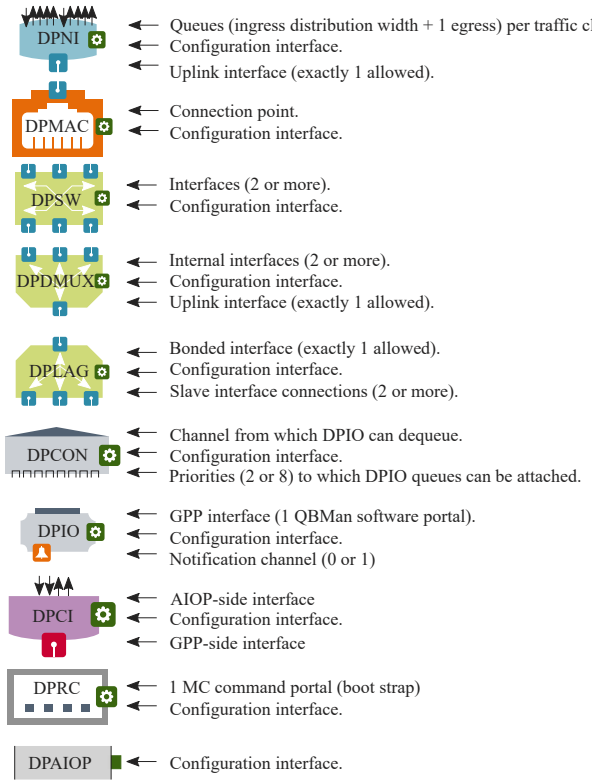

Figure 132. DPAA2 object summary and icons

DPNI

A DPNI object is the key to network interfaces. On ingress, it receives frames from a DPMAC or another object such as a DPSW, parses headers, determines the frame's traffic class, and enqueues the frame onto a frame queue selected based on the traffic class and other header values. This supports both hash-based distribution of frames to multiple cores, and also direct flow steering of frames to specific cores.

DPNI can generate a per-queue data availability notification when a frame is enqueued. On egress, the DPNI dequeues frames from frame queues and transmits them to an external port using a DPMAC, or to another DPAA2 object such as a DPSW.

DPMAC

The DPMAC object represents an Ethernet MAC, a hardware device that connects to a PHY and allows physical transmission and reception of Ethernet frames.

DPSW

The DPSW object provides the functionality of a general layer 2 switch. It receives packets on one port and sends them on another. It can also send packets out on multiple ports for the purposes of broadcast, multi-cast, or mirroring.

DPDMUX

The DPDMUX is another type of switch. It differs from a DPSW in several ways. A DPDMUX may have only a single uplink port. Also, it can be programmed to direct packets based on header values above layer 2.

DPLAG

The DPLAG object provides link aggregation. It combines two or more uplinks into a single downlink.

DPCON

The DPCON object allows multiple DPNIs to be aggregated into a single device that appears to a GPP core or AIOP software as single interface that carries frames from multiple DPNIs; it combines two or more network interfaces into one. It provides a hardware-based scheduling off load because the hardware selects the order based on the priority in which frames from the multiple DPNIs are provided to software on GPP cores or AIOP.

DPCON is also useful for software that polls for input frames; it allows a single interface to be polled instead of multiple interfaces.

DPCON objects are also used by Linux Ethernet drivers for priority-based frame delivery.

DPIO

General purpose processing core software uses a DPIO object to perform hardware queuing operations, such as enqueue and dequeue, and hardware buffer management operations, such as acquire and release. It also allows data availability notifications to be received. DPIOs can generate interrupts. The DPIO object is unusual in that GPP core software is expected to directly access portions of the DPIO's hardware (QBMan software portals) for run time operations, in addition to supporting configuration operations from the management complex.

Note that AIOP software does not rely on DPIO objects; they are used only by software on the general purpose processing cores.

DPBP

The Datapath Buffer Pool object represents a QBMan buffer pool. It is used mainly as a resource by network drivers, but it is an active entity because it can send buffer pool depletion notifications to GPP core software.

DPCI

The Datapath Communication Interface provides general purpose processing core software with a transport mechanism typically for control and configuration command interfaces to AIOP applications. The AIOP service layer implements the AIOP-side of the transport, but the commands are application-specific. Note that AIOP is optional in DPAA2 and is not present on some SoCs.

DPRC

The DPRC object allows the Management Complex to track sets of objects in use by the same software component. The objects in the set are said to be in the same container. It also facilitates the assignment of sets of objects to specific software components, such as a virtual machine or a user space application using user space drivers. The software component can query containers in order to discover objects at run time, and this enables plug-and-play drivers that interface to objects.

Some objects include DMA-capable hardware. All objects in the same DPRC share a common ICID, and a common set of IO-MMU mappings. A number of key features of DPRCs include:

- **Direct access.** All the objects and resources in a container are private to the container, and software components get direct access to the registers (as abstracted by the Management Complex) of the hardware objects.
- **Dynamic discovery.** A software context that is given a DPRC can dynamically discover the objects and resources placed in the container using MC commands.
- **Hot plug/unplug.** Objects can be dynamically plugged and unplugged into DPRCs.
- **Security.** A software context can only see the objects in its DPRC, and cannot affect other containers or the proper operation of other software contexts. DMA transactions from MC objects are isolated using the system IOM-MU.

DPMCP

The DPMCP object represents a Management Complex command portal and is used by drivers to send commands to manage objects.

DPAIOP

DPAIOP is a configuration object that aids in loading programs onto the AIOP, running the AIOP, resetting the AIOP, and receiving status, error, and log information from AIOP programs. Note that the AIOP is optional in DPAA2 and is not present on some SoCs.

Objects for accelerators

There are also objects associated with accelerators such as SEC, PME, and DCE. These objects provide software with interfaces to the accelerator hardware. For this reason, the accelerator interface objects end in "I".

- DPSECI - SEC (security/cryptographic coprocessor) interface.
- DPDCEI - DCE (data compression engine) interface.
- DPDMAI - DMA engine interface.

Software uses queues associated with an object to send a buffer to an accelerator for processing and to receive the result.

New types of objects

NXP will create new types of objects over time to address new needs and use cases as they arise.

8.3.1.4.2 Management Complex: How DPAA2 objects are created and managed

This section outlines how the Management Complex creates and manages DPAA2 objects.

The best way to think of DPAA2 hardware, in particular WRIOP and QBMan, is that it provides many low-level resources ranging from Ethernet MACs to look up tables to frame queues and so on. Software's mission is to assemble the right set of these low-level resources, and configure them collectively to achieve a goal.

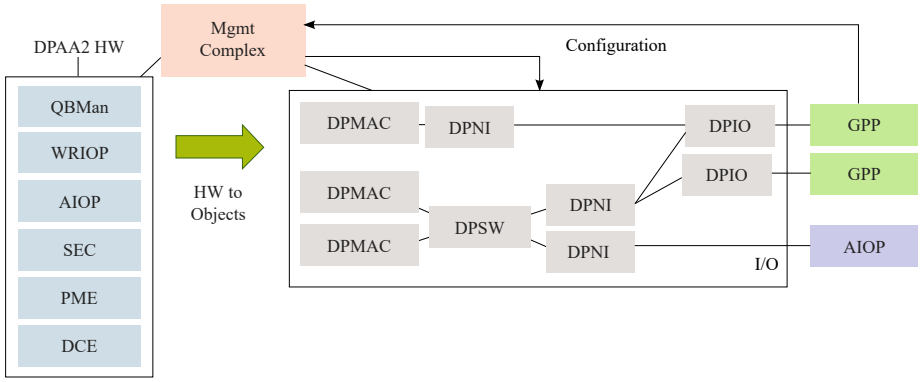

Figure 133. Management Complex creates objects from hardware sub-components

Think of the low-level resources as “atom resources” because they are always allocated as a unit. DPAA2 objects are then “composite resources,” or collections of atom resources that are then configured to achieve a common goal, like being an L2 switch as shown in Realizing an L2 switch.

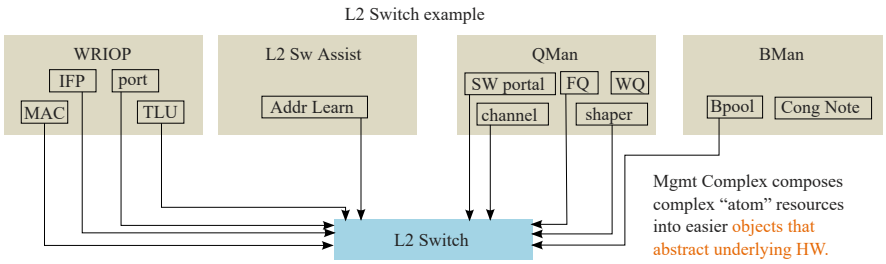

Figure 134. Realizing an L2 switch

The creation method for a DPAA2 object involves allocating the necessary atom resources and configuring them enough to place the object in an initial idle state. Object methods and other interfaces then allow it to be further configured and used. For example, forming an L2 switch from DPAA2 atom resources is quite complex. The NXP firmware running on the Management Complex implements the methods necessary, and hides this complexity from GPP (and AIOP) developers.

Continuing the example, an L2 switch object can also be shutdown and disassembled by its methods. Its atom-resources are then placed back into the pools of atom resources that the Management Complex firmware manages.

Hardware directly visible to software

Clearly, DPAA2 provides abstractions. The objects are best thought of as being hardware, and most actually are collections or encapsulations of hardware resources that are allocated and configured to achieve a higher-level and more abstract purpose than would be clear from a direct view of the hardware resources. An example of an abstract purpose is "be an L2 switch" (DPSW).

It can be helpful to focus on exactly what is visible to driver-level software running on the general purpose cores and AIOP, especially since what is visible is a mixture of direct access to hardware and indirect access to hardware via abstractions. This discussion will be biased towards the view of objects from drivers running on general purpose processing cores (such as in U-Boot and Linux).

Also the discussion will avoid details of individual objects since this is an overview with the purpose of clarifying objects in general.

DPAA2 visibility boundary describes in one diagram what is directly visible to the driver layer software.

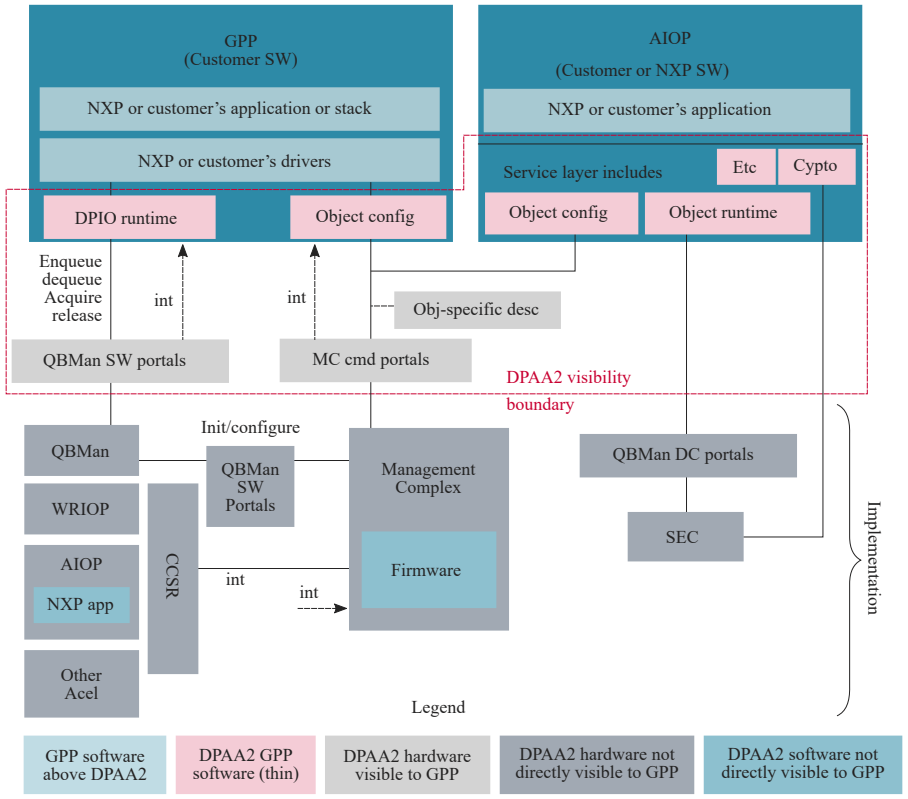

Figure 135. DPAA2 visibility boundary (AIOP not present on all DPAA2 SoCs)

There is quite a lot in the figure above, so it is best to break it down. What driver level software can see and do is dictated by its function.

This begins with the Management Complex (MC) itself. The discussion below will focus on the services that the MC provides to other software in the system. There will be no discussion of MC firmware's internal design.

See Management complex visibility in DPAA2. The first step is that general purpose processing core software (usually a boot loader) must load the opaque firmware image onto the Management Complex and then start it running. This involves direct access to portions of the Management Complex hardware: registers defining the location of the Management Complex's portion of DDR, image location, address translation, and run state control.

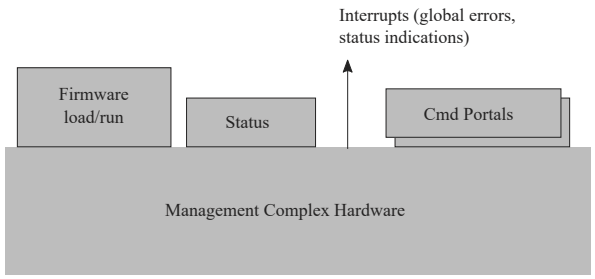

Figure 136. Management Complex visibility in DPAA2

The driver software also requires visibility to global status, particularly to status for global errors. Changes in the state of this status can be signaled by interrupts to the general purpose processing cores so the Management Complex can produce these interrupts.

Finally, the Management Complex exists to serve its masters, the general purpose processor core (and AIOP when present) software that “owns” objects, i.e. has been allocated access rights to them via container ownership and hierarchy. The service is provided by responding to commands so driver software needs a way to deliver commands to the Management Complex. In addition, this process must be secure in that the Management Complex must know, in a way that cannot be spoofed, an ID of the software sending the command. This is to allow the Management Complex to enforce object access rights.

Driver software delivers commands to the Management Complex via hardware called Management Complex command portals. SoC hardware provides significant numbers (at least 10s) of these portals because:

- They can be directly assigned to multiple different drivers, all of which independently use the Management Complex’s services. If they each have their own command portal, they do not have to coordinate with each other.
- Each independent driver instance has its own ID (ICID) that is securely associated with the command portal to prevent spoofing. This prevents a driver from being able to access for configuration an object that it does not "own".

To send a command to the Management Complex, driver software creates a descriptor and enqueues a pointer to it to the command portal.

Next consider objects. See DPAA2 objects.

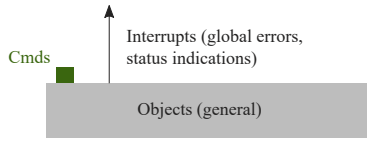

Figure 137. DPAA2 objects

Objects are created either via the DPL file or driver software sending a command to the Management Complex instructing it to create an object (as in restool). The Management Complex supplies a globally unique ID for the new object.

Object command interfaces are abstractions. There is no hardware that directly represents object command portals. Objects are usually hardware, but in most cases that hardware does not directly expose a hardware-level programming model to driver software. Instead, driver software configures objects via an indirect mechanism; it sends a command to the Management Complex. The command is a descriptor that includes the ID of the object as well as the definition of the operation to be performed.

The Management Complex automatically gets the ID of the requestor when it reads the command. The command portal securely adds it. The Management Complex then checks that the requestor is authorized to configure the object and, if so, performs the configuration on behalf of the requestor.

So, object configuration is a visible part of DPAA2, but the configuration of the individual hardware subcomponents that make up an object is not.

The fundamental programming model for object configuration is the commands that can be sent to the Management Complex to configure the object. Each object type has a different purpose so each object type’s configuration programming model is defined by the descriptor set that describes the commands to configure the particular type of object.

NXP also provides C callable APIs that basically allocate and populate descriptors and pass them as commands to the Management Complex. The APIs bear a close relationship to the more fundamental descriptors.

Many object types have nothing but a configuration space, but this is not always true. Some objects also provide I/O interfaces. The DPIO object is a prime example. See DPIO object and I/O interfaces.

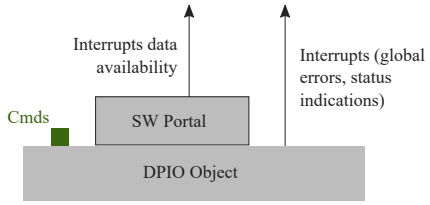

Figure 138. DPIO object and I/O interfaces

As has been stated before, DPAA2 objects are usually opaque bundles of hardware sub-resources allocated and configured to achieve a more abstract purpose. A DPIO object includes a hardware sub-resource called a QBMan software portal but this hardware is not opaque to the driver software running on the general purpose processing cores. The reason is performance. Software portals are the hardware mechanism for actually doing I/O with DPAA2 peripherals so driver software must directly access them. There are also data availability interrupts associated with DPIOs. These indicate availability of data to read using the software portals.

NOTE

Software portals actually support more than I/O (enqueue onto queues and dequeue from them). They also support commands. The simplest examples are buffer acquires and releases. Without going into full detail, software portals actually support commands that require privilege (example: initialize a frame queue) and commands that do not (example: acquire a buffer). Driver software on general purpose processing cores (and AIOP) uses only the unprivileged commands. The privileged commands are not part of the visible architecture. They are used only by Management Complex firmware.

In summary, the visible architecture includes both hardware and abstractions as follows:

- Management Complex hardware associated with loading and running images
- Management Complex hardware associated with accessing global status
- Management Complex global interrupt
- Management Complex hardware command portals
- Objects themselves (abstraction):
  - Object configuration interface and command set as defined by descriptors (abstraction)
  - Object error interrupts
  - Some objects (like DPIO) also have additional interfaces that are hardware directly accessed by driver software. DPIO's QBMan software portals are an example. They can produce interrupts.

8.3.1.4.2.1 Object creation, the datapath layout file, and restool

DPAA2 objects can be created in multiple ways. First, they can be specified in a Datapath Layout (DPL) file that the Management Complex reads and applies before Linux boots. This file contains the specific list of objects that are to be automatically created as the system initializes.

DPAA2 objects also can be created and destroyed dynamically by sending commands to the Management Complex through its command portals via a kernel driver. For Linux, a user space command line tool called "restool" uses this interface to allow interactive and dynamic creation of objects. It also allows destruction and some additional configurations to be done.

Restool also shows information about objects and what they are connected to.

8.3.1.4.2.2 DPRC objects, plug and play, and the fsl-mc Linux "bus"

As mentioned previously, it is common for a GPP software component to manage multiple objects. The DPIO parallelism diagram shows a simple example of the Linux kernel managing a set of objects to provide a pair of network interfaces. The DPRC (Datapath Resource Container) is a special object that serves to organize other objects, and also the hardware sub-components from which

objects can be dynamically created; the hardware sub-components include frame queues, channels, buffer pools, etc. Containers can be created and filled with objects and resources and then passed to the software component, such as a virtual machine, that will use them.

The software that was assigned a DPRC can enumerate the objects inside it; this is a form of dynamic hardware discovery that relates to plug-and-play. For example, an operating system can scan a DPRC and associate all DPNI objects found within with an Ethernet driver that will use them to form network interfaces. The Ethernet driver then uses a dynamic allocator within the kernel to aquire other objects such as DPBPs that it needs to operate.

The device discovery analogy is strong enough that Linux exposes DPRCs assigned to it as a bus in sysfs-- much like physical buses like PCI. The same sysfs mechanism that allow a physical PCI device to be assigned (bound) to virtual machines are also used to assign containers to virtual machines. Objects can even be dynamically added and removed from DPRCs. This is analogous to hot plug and unplug on a bus.

Many DPAA2 objects are DMA-capable so that they can autonomously read and write memory. SoCs like the LS2088A contain an IO-MMU, so objects must express an identifier (that they cannot control) when they perform DMA operations. This identifier is called an ICID in DPAA2, and it serves as a key for the IO-MMU to associate I/O virtual addresses with I/O physical addresses. In DPAA2, ICIDs are attributes of DPRCs, and all objects in a DPRC express the same ICID value.

A GPP software context (a virtual machine or application) will typically be assigned a single DPRC that contains all the fsl-mc resources that the software context can access or use. As mentioned elsewhere, there are two general types of resources that can be in a container:

- **Resources:** Resources are primitive resources that can't be further decomposed, and are uninitialized and unpurposed. Some examples are MC portals, QBman portals, frame queues, buffer pools, etc. Generally primitives are “fungible,” in that there is nothing distinctive among the same kind of primitives. However, some primitives may be non-fungible, such as an external port or MAC.
- **Objects:** Objects are created and configured with a purpose, typically constructed of multiple resources. Some examples of objects are network interfaces, an L2 switch, or a crypto instance. A DPRC is itself an fsl-mc object.

NOTE

See documentation of the Linux restool facility for more information related to this topic.

Management Complex (MC) initialization and boot

The MC is normally enabled and initialized by system boot firmware such as U-Boot. The boot firmware is responsible for reserving a region of memory (DDR) for the fsl-mc, and then loading the MC firmware into memory, loading a datapath layout file (see below for DPL overview info), and writing a bit to enable/start the MC. See Management Complex initialization and boot.

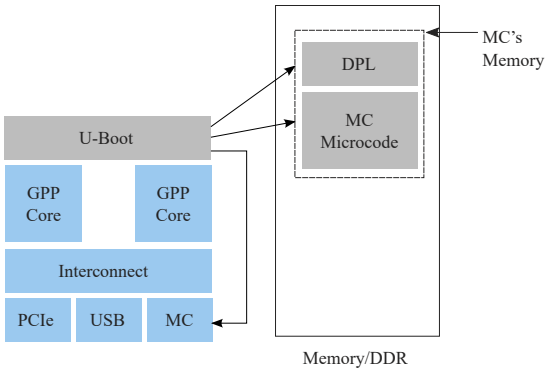

Figure 139. Management Complex initialization and boot

Management Complex datapath layout file (DPL)

As mentioned above, a datapath layout file (DPL) must be supplied to the Management Complex when it is booted. The DPL contains the definitions of initial objects and containers/DPRCs to create.

A DPL is defined in a text file in device tree syntax (DTS) format and then compiled into a standardized DTB binary format (used by ePAPR compliant device trees).

See the *DPAA2 User Manual* for more information and examples on the datapath layout file.

Boot loader use of the MC

In typical usage, the boot loader loads the MC firmware image and starts the MC running. At this time, it supplies a data path control (DPC) file that supplies the MC image with basic configuration information that allows it to operate.

The boot loader can now use the services of the MC in order to access network devices. It is a good approach to have the boot loader dynamically create the objects it needs and destroy them (releasing resources) before starting the operating system. This way, the operating system is not forced to operate with the constraints of objects and DPRCs established by the boot loader. The OS can see a "green field".

Optionally, the boot loader can apply the data path layout (DPL) file mentioned above just before starting this OS. This approach allows the DPL to be written only to serve the operating system's needs and not the boot loader's, which tend to be much simpler.

DPRCs are hierarchical

The MC manages DPRCs in a hierarchical relationship. There is a single root DPRC at the root of the hierarchy. That DPRC can have child DPRCs, children can have grandchildren, and so on. The root DPRC belongs to the root software context of the system, usually an OS or hypervisor and it should never be unbound from the corresponding driver. The root DPRC can further allocate its resources to its child DPRCs and assign them to other entities such as user space applications or virtual machines.

In this example there are 3 DPRCs/containers managed by the Management Complex: a root container “root” with 2 children “foo” and “bar”. The DPRCs all contain 3 objects, a DPNI, DPBP, and DPIO. There are 3 software contexts: the host Linux, a user space application, and Linux in a KVM virtual machine. Each software context is assigned a DPRC that it can use and manage; see DPRC hierarchy for a figure that illustrates this example.

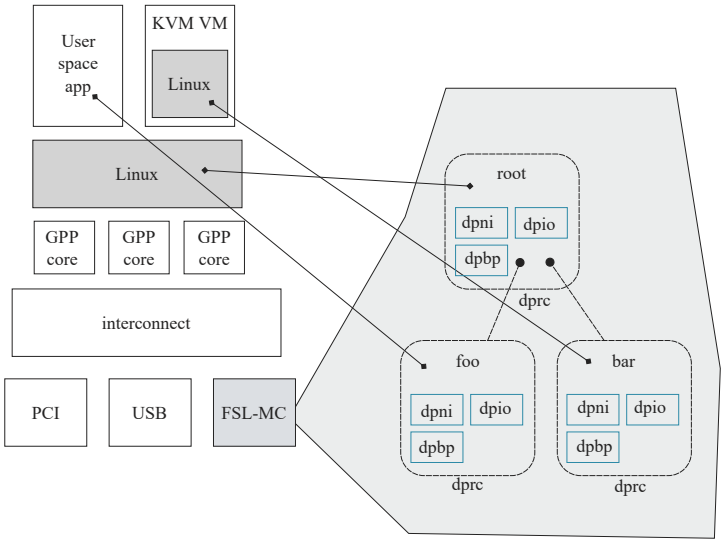

Figure 140. DPRC hierarchy

The container hierarchy allows the parent to manage the resources of the children. If the OS in the KVM VM crashes, the parent (Linux) can reset and clean up the VM's DPRC. If the user space application terminates, the parent (Linux) has the option of destroying the container.

8.3.1.4.3 Objects and topology

As mentioned elsewhere, objects have a topological relationship with each other. See Object topology example for an example.

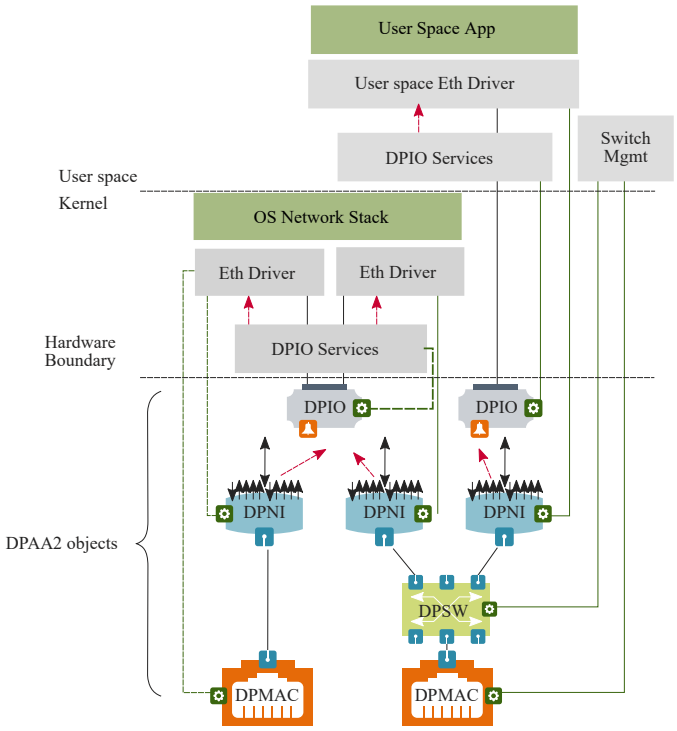

Figure 141. Object topology example

- There are three network interfaces managed by the DPAA2 Linux Ethernet driver. Each of the network interfaces uses a DPNI object.
- All of the Ethernet drivers happen to have a distribution width of one (an example), so they cannot load balance to multiple cores or threads; this was done to simplify the diagram and discussion. If a network interface has a distribution width greater than one, then many times it is connected to more than one DPIO but this is not required.
- Two of the network interfaces are connected to a switch; two DPNIs are connected to a DPSW. This allows both network interfaces to communicate outside of the SoC using the DPMAC that is also connected to the DPSW, and they can also communicate with each other using the DPSW.
- One of the network interfaces is directly assigned to a user space process, and has a user space Ethernet driver. This network interface could also be directly assigned to a KVM virtual machine under Linux.
- Two of the DPNIs have Linux network stack drivers; they interface to the Linux network stack. One of them has its own DPMAC, and a traditional type of controller represented by its DPNI being directly connected to a DPMAC.
- The two DPNIs connected to the Linux network stack share a single DPIO; this is possible when they can cooperatively use a layer of GPP software that provides DPIO services. The hardware that makes up a DPIO is a QBMan software portal and, optionally, a QMan channel for data availability notifications. QBMan software portals are a relatively scarce hardware resource, so they are designed to be sharable, in particular for NAPI-compliant Linux Ethernet drivers.
- It is a key assumption of DPAA2 that objects are managed (or “owned”) by a single software entity. Independent software entities can independently manage the objects they own, and this allows software to be decoupled from other entities.
- The management relationship between objects and software entities is not defined or imposed by DPAA2; DPAA2 defines the objects and what they do, and not what software uses them. Customer GPP core software is allowed to determine the management relationship; a single monolithic software entity that manages all of the objects can be created.
- The Linux DPAA2 Ethernet driver design defines the set of objects needed to provide a network interface. The green lines show the management relationships for Linux network interfaces and switches. Note that switches are managed independently from the network interfaces that connect to it.

The *DPAA2 User Manual* provides a complete description of the rules that govern object topology.

8.3.1.4.4 AIOP in DPAA2

This section describes AIOP in the DPAA2 architecture and how it uses DPAA2 objects. The figure below shows an example in which the Linux kernel network stack has a single Ethernet interface, a user space application has a single directly assigned Ethernet interface, and AIOP has two Ethernet interfaces.

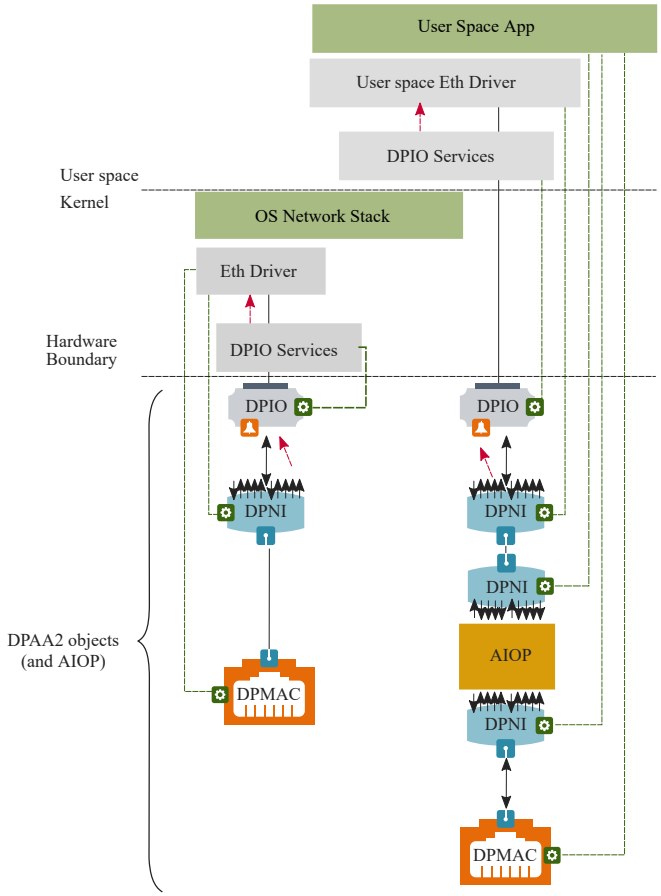

Figure 142. AIOP in DPAA2

AIOP runs software and uses objects in a manner that is similar to general purpose processing cores. In this example configuration, the AIOP's software has access to two Ethernet interfaces. One is connected to a MAC for an external connection to outside the SoC. The other is connected point-to-point to the general purpose processing core user space application's Ethernet interface.

So, there are two Ethernet interfaces involved on the path between the AIOP and the user space application. This is logical because there is software running in both places. Thus, each software component should see and control its own Ethernet Interface. Both software components do Ethernet I/O without being coupled to what their Ethernet interface is connected to.

One difference is that AIOP software is focused on packet processing. It does not actively manage or configure its own Ethernet interfaces. Usually, a control application on the general purpose processing cores takes that role. Also, the AIOP does not use DPIO objects.

Note that AIOP itself is not a DPAA2 object. It is an active entitiy that uses other DPAA2 objects. However, there is a DPAIOP object that general purpose processing core software can use to manage the AIOP, e.g. start it, stop it, load images onto it, get error status from it, etc.

In addition, there are DPAA2 objects (not shown) that facilitate passing commands (rather than packets) between general purpose processing core software and AIOP software.

AIOP Service Layer

NXP provides an AIOP software library called the "AIOP Service Layer". This library's main purpose is to provide very lightweight drivers for hardware components that AIOP software must access. These include components such as Ethernet intefaces, the QBMan buffer manager, timers, table lookup units, etc.

8.3.2 DPAA2 Quick Start Guide

8.3.2.1 Data Path Resource Containers

Many sections refer to Data Path Resource Containers (DPRC), so a brief introduction to the concept may be helpful. DPRCs are part of the DPAA2 object architecture that is described in the DPAA2 Software Overview.

DPRCs are communicated to software entities as a part of their start up process; this is true for software entities such as:

- The host Linux kernel (that may provide KVM services to virtual machines)
- Linux kernel instances that run in virtual machines
- DPDK applications
- AIOP applications

DPRCs contain DPAA2 objects that are used by the software entity that owns the DPRC. For example, DPNI objects are used as network interfaces.

As an example, see RDB DPLRDB DPL. The DPRC called “dprc@1” is supplied to the host Linux kernel. It contains one DPNI object. The DPNI object binds to the DPAA2 Linux kernel Ethernet driver, and causes two standard Linux Ethernet interfaces to exist and be visible using “ifconfig”. See later sections in this document for additional details and explanations on the use of objects by various types of software entities.

As mentioned previously, DPRCs must be created and populated with the initial set of DPAA2 objects prior to the startup of the software entity that will use the DPRC.

8.3.2.1.1 Creating DPRCs

There are two ways to create and populate DPRCs:

1. Statically: by means of a control file called a datapath layout (DPL) file. Key Release Files: RCW, DPC and DPL describes the DPL files that are supplied as examples with the Linux SDK.
2. Dynamically: by means of the Linux command line utility called restool. See DPRCs and restool section, and also the document titled *Standard Linux Documentation.*

A software entity behaves exactly the same way on startup regardless of whether its DPRC was created statically using a DPL or dynamically using restool. The DPL method is convenient for situations when the desired DPRCs are known in advance. DPRCs defined within the DPL are created and populated automatically with no need for a subsequent use of restool.

8.3.2.1.2 DPRCs and Hot Plug

A DPRC must be supplied to a software entity when the software entity is started; this implies prior creation of the DPRC. However, it is also possible to dynamically alter the contents of a DPRC *after* the software entity that is using it is already running; this is a form of hot plug.

For example, restool can be used to dynamically create a DPNI object and then assign it to a DPRC. If that DPRC is being used by a Linux kernel instance, this will cause that kernel to dynamically detect a new network interface and bind it to the Linux kernel Ethernet driver; the “ifconfig” command will now show a newly created network interface.

It is also possible to dynamically destroy or unassign objects within an in-use DPRC; this is a form of hot unplug. Hot plug and unplug are advanced topics, and not covered further here. The key take-away is that dynamically creating and populating a DPRC

before supplying it to software entity when it is started is a very different use case than hot plug/unplug. The latter use case involves changing the contents of a DPRC *while it is in use* by a software entity.

8.3.2.2 Key Release Files: RCW, DPC and DPL

This section describes the key binaries that are available on the RDB. These include the reset configuration word (RCW), the data path configuration (DPC) and the data path layout (DPL) files.

8.3.2.2.1 RCW

The reset configuration word (RCW) resides in non-volatile memories (e.g. NOR, QSPI, SDHC). It gives flexibility to accommodate a large number of configuration parameters to support a high degree of configurability of the SoC. Configuration parameters generally include:

- Frequencies of various blocks including cores/DDR/interconnect.
- IP pin-muxing configurations
- Other SoC configurations

The RCW's provided with the release enable the following features:

- Boot location as NOR flash
- Enables 4 UART without flow control
- Enables I2C1, I2C2, I2C3, I2C4, SDHC, IFC, PCIe, SATA

The figure below shows the SERDES configuration supported for DPAA2 platforms. Note that each platform supports upto 5 ports out of the 8 available on the RDB at a time.

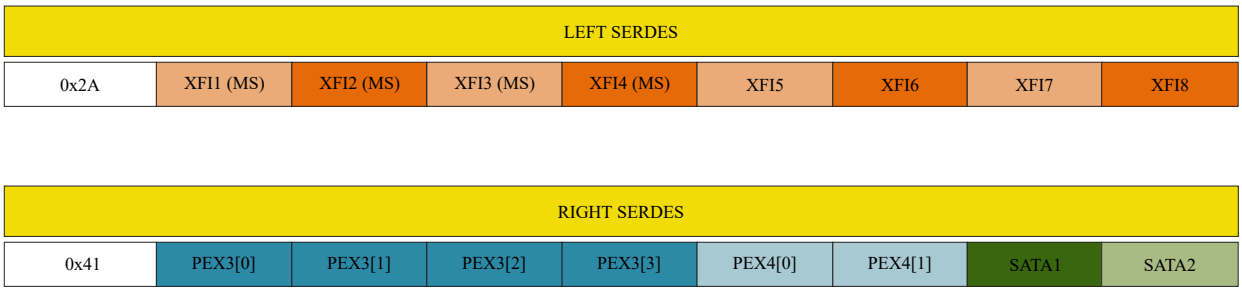

Figure 143. SERDES

8.3.2.2.2 Data path configuration file (DPC)

The data path configuration (DPC) contains board-specific and system-specific information that overrides the default DPAA hardware configuration.

The release provides one data path configuration (DPC) file per board type. This file specifies the following information:

- default logging mode for the Management Complaex (MC)
- default board MACs
- default number of DPAA channels with 2 and 8 work-queues

The DPC is based on a text source file similar to a device tree source file (DTS) and should be compiled using the DTC utility to form a binary structure (blob, similar to DTB).

8.3.2.2.3 Data path layout file (DPL)

The data path layout file (DPL) defines the containers created during MC initialization. In order to compile the DPL, the device tree compiler (DTC) tool needs to be installed on the host system.

As described in Creating DPRCs, the example DPL source code is provided in the *dpl-examples* package.

The DPL file specifies the basic resources needed for a simple usecase; other resources are created and managed dynamically using restool capabilities. For each of the use cases included in this document, there is a diagram that depicts the objects that are necessary for that usecase.

The DPL is based on a text source file (similar to a device tree source file (DTS)) and compiled with the DTC utility to form a binary structure (blob, similar to DTB). The DPL file should be compiled to a binary blob using standard DTC tool.

Using a static DPL is not a requirement since restool can be used to dynamically create/manage objects and resources.

8.3.2.2.3.1 RDB DPL

The source for the RDB DPL is in the *dpl-examples* package:

- dpl-examples/LS2088a/RDB/dpl-eth.0x2A_0x41.dts

The figure below shows a graphical view of the container configuration:

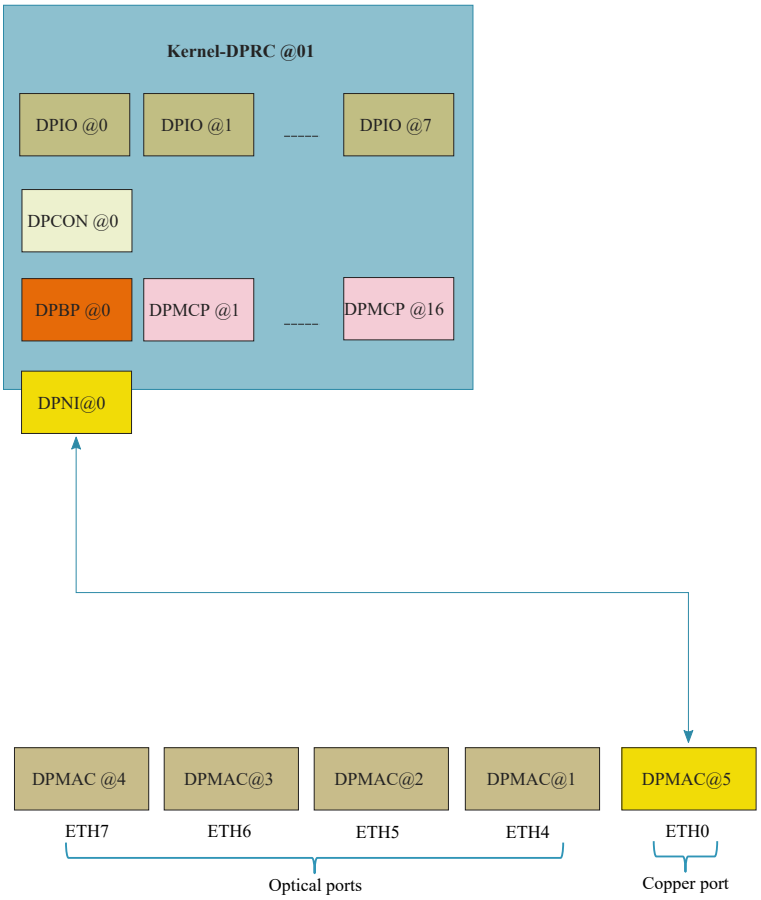

Figure 144. RDB DPL container configuration

8.3.2.2.3.2 RDB DPL

The source for the RDB DPL is in the *dpl-examples* package:

- dpl-examples/ls1088a/RDB/dpl-eth.0x1D_0x0D.dts

The figure below shows a graphical view of the container configuration:

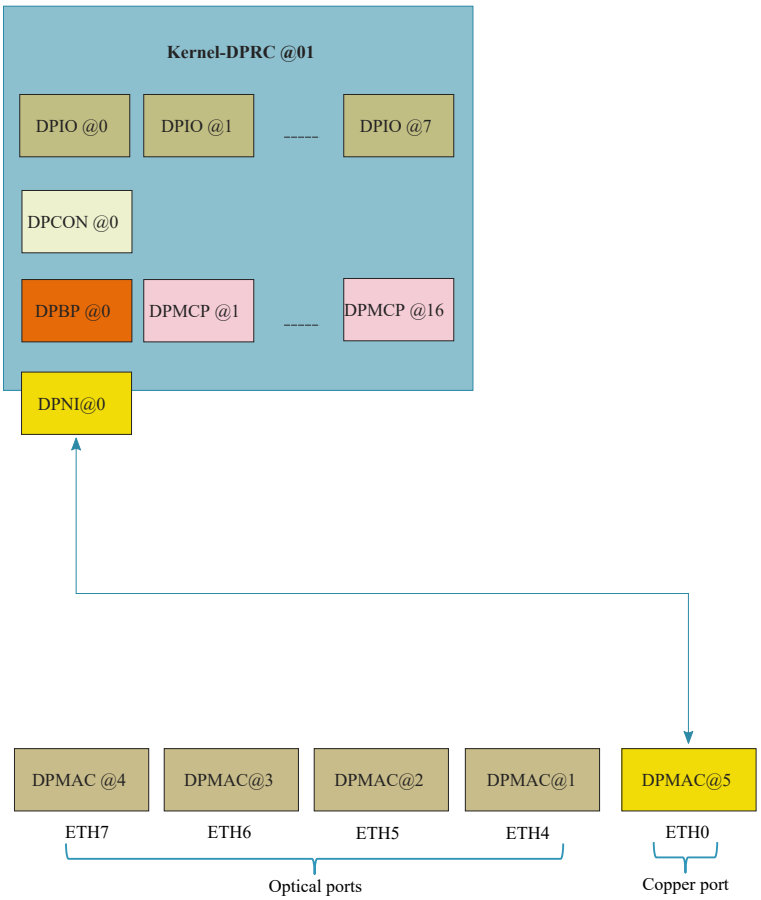

Figure 145. RDB DPL container configuration

8.3.2.2.3.3 DPRCs and restool

The release provides a Linux command-line tool called restool that can be used for examining the resource containers used for managing DPAA2 objects and resources. See the DPAA2 Overview for an overview of DPAA2 and the data path resource containers (DPRCs). Also see the Stardard Linux Documentation for details about functionality and use of restool.

Given below is an example of using restool:

List dprc:

```
$ restool dprc list
dprc.1
```

List all objects in container dprc.1:

```
$ restool dprc show dprc.1
dprc.1 contains 33 objects:
object          label           plugged-state
dpio.7                          plugged
dpio.6                          plugged
dpio.5                          plugged
dpio.4                          plugged
dpio.3                          plugged
dpio.2                          plugged
dpio.1                          plugged
dpio.0                          plugged
dpni.0                          plugged
dpbp.0                          plugged
dpmac.5                         plugged
dpmac.4                         plugged
dpmac.3                         plugged
dpmac.2                         plugged
dpmac.1                         plugged
dpcon.0                         plugged
dpmcp.0                         plugged
dpmcp.16                        plugged
dpmcp.15                        plugged
dpmcp.14                        plugged
dpmcp.13                        plugged
dpmcp.12                        plugged
dpmcp.11                        plugged
dpmcp.10                        plugged
dpmcp.9                         plugged
dpmcp.8                         plugged
dpmcp.7                         plugged
dpmcp.6                         plugged
dpmcp.5                         plugged
dpmcp.4                         plugged
dpmcp.3                         plugged
dpmcp.2                         plugged
dpmcp.1                         plugged
```

Get information about dpni.0:

```
dpni version: 7.1
dpni id: 0
plugged state: unplugged
endpoint state: -1
endpoint: No object associated
link status: 0 - down
mac address: 00:00:00:00:00:00
dpni_attr.options value is: 0
num_queues: 1
num_tcs: 1
mac_entries: 16
vlan_entries: 0
qos_entries: 0
fs_entries: 64
qos_key_size: 0
```

```
fs_key_size: 56
ingress_all_frames: 0
ingress_all_bytes: 0
ingress_multicast_frames: 0
ingress_multicast_bytes: 0
ingress_broadcast_frames: 0
ingress_broadcast_bytes: 0
egress_all_frames: 0
egress_all_bytes: 0
egress_multicast_frames: 0
egress_multicast_bytes: 0
egress_broadcast_frames: 0
egress_broadcast_bytes: 0
ingress_filtered_frames: 0
ingress_discarded_frames: 0
ingress_nobuffer_discards: 0
egress_discarded_frames: 0
egress_confirmed_frames: 0
```

8.3.2.3 Linux Ethernet

This chapter provides guidelines on exercising creation, functionality and statistics of Linux DPAA2 Ethernet interfaces.

8.3.2.3.1 Features overview

The following is an overview of the functionality of the Linux DPAA2 Ethernet driver that will be described in this chapter:

- Primary MAC address change
- Scatter-gather support
- Checksum offload
- MAC filtering
- Large frame support
- GRO – generic receive offload
- Egress traffic shaping
- Rx hashing
- Rx flow steering
- Flow control pause frames
- Interface statistics
- XDP
- MQPRIO qdisc support
- CEETM support

8.3.2.3.2 Compiling and selecting Kconfig options

The DPAA2 Ethernet driver is by default selected by the kernel configuration shipped with the SDK, with a set of sensible compile-time defaults. The driver path in the kernel config file is: `" Device Drivers -> Staging drivers -> Freescale DPAA2 devices -> Freescale DPAA2 Ethernet" (CONFIG_FSL_DPAA2_ETH).`

The following Kconfig selects are also available, but not checked by default:

- "Enable Rx error queue" `(CONFIG_FSL_DPAA2_ETH_USE_ERR_QUEUE)` - This configures a separate queue for presenting Rx Error frames to the Ethernet driver running on the GPP. By default this option is disabled and Rx Error frames are dropped in hardware and counted for statistics inspection. Rx Error processing increases the GPP load and so it is only necessary in debugging situations when inspection of actual frames is required.
- "Data Center Bridging (DCB) Support" `(CONFIG_FSL_DPAA2_ETH_DCB)`. This option depends on "Data Center Bridging support" `(CONFIG_DCB)`. It is required when configuring Priority-based Flow Control (PFC) scenarios.
- "DPAA2 Ethernet CEETM QoS" `(CONFIG_FSL_DPAA2_ETH_CEETM)`. This option enables the use of a custom CEETM qdics to offload egress Qos support.

8.3.2.3.3 Creating a DPAA2 network interface

This section documents the resource utilization and the necessary steps for creating a DPAA2 network interface (DPNI) in Linux.

A DPNI can be created either statically through the DPL file or dynamically using the ‘restool’ utility.

8.3.2.3.3.1 DPAA2 objects dependencies

This section documents the steps to create a DPNI and related objects in order to have a fully functional network interface. It describes the dependencies a DPNI has on other DPAA2 objects.

This is of interest to anyone who changes a static DPL file or uses *restool* commands to dynamically create: restool to create a DPNI (For LS1088A see Using restool to create a DPNI).

The DPAA2 object definition allows for flexibile software architectures. The Linux drivers, in particular the Ethernet driver, are additionally bound by requirements from the kernel architecture. This enforces a certain usage model of the DPAA2 objects that the DPNI interacts with; in particular, it affects the number of various other DPAA2 objects that a DPNI need s.

Generally, the Linux Ethernet driver requires private DPAA2 resources (e.g. Frame Queues) and objects (e.g. DPCON objects), distinct from other DPNIs. There are exceptions, such as the DPIO or DPMAC, which are not owned by the DPNI. To create a DPNI, either statically in DPL or dynamically using ‘restool’, the following types of objects may need to be instantiated in the current container (i.e., made available if they are not already):

- DPBP
- DPMCP
- DPCON
- DPIO
- DPMAC

The significance and number of these objects per DPNI are detailed in the following table:

Object	Private to DPNI?	Cardinality	Comments
DPBP	Yes	1 per DPNI	Each network interface (NI) has private buffer pools, not shared with other NIs.
DPMCP	Yes	1 per DPNI 1 per DPMAC	MC command portals (MCPs) are used to send commands to, and receive responses from, the MC firmware. One such example is configuring DPNI functionality like hashing or checksumming, but DPNI statistics are also queried via the MCPs. Like the DPNI, each DPMAC also requires one private DPMCP.

Table continues on the next page...

Table continued from the previous page...

Object	Private to DPNI?	Cardinality	Comments
DPCON	Yes	Rx hash size/ number of transmitter queues (“num_queues”) of the DPNI.	DPCONs are used to distribute Rx or Tx Confirmation traffic to different GPPs, via affine DPIO objects. The implication is that one DPCON must be available for each GPP we want to distribute Rx or Tx Confirmation traffic to. Rx and Tx Confirmation share the same DPCONs if they are available. (If for example GPP #0 processes both types of traffic, one DPCON is enough. If in addition GPP #1 processes only Tx Confirmation traffic, then a second DPCON is necessary.) Since we must be able to distinguish between traffic from different NIs arriving on the same GPP, the DPCONs must be private to the DPNIs. These design constraints may cause a relatively large consumption of DPCONs by DPNIs with large Rx distribution width. The DPNI's Rx distribution width is implemented by the "num_queues" property (see Rx hashing for extra information). Notes: DPCONs' main hardware resource are the Work Queues (WQs). The DPCONs come in 2 flavours: 2-WQ and 8-WQ DPCONs, depending on the number of traffic class priorities the object is going to support. (Note: the Ethernet driver only supports one traffic class at the moment, so using 2-WQ DPCONs is safe and enough.) The MC firmware can convert any number of 8-WQ DPCONs to four times as many 2-WQ DPCONs, depending on the static configuration provided at boot. Since WQs are a limited hardware resource, DPCONs tend to be limited, too, especially the 8-WQ flavor. The DPNIs being one of the major consumers of DPCONs, the current SDK ships with a default configuration where a number of the 8-WQ DPCONs are converted to 2-WQ DPCONs, thereby increasing their availability. Note that DPIO objects themselves transparently consume DPCONs (one per DPIO object), which therefore must be substracted from the total number available to the DPNIs (they need not be explicitly declared in the DPL, but they are simply not available to the rest of the system). The system can provide up to 64 8-WQ DPCONs (and up to 256 2-WQ DPCONs and combinations thereof). So for a container with 8 DPIOs, only up to 56 8-WQ DPCONs will be in fact available for DPNI configuration.
DPIO	No	One per running GPP	DPIOs are used to provide data availability notifications to the GPPs. For each GPP that we want to distribute traffic to, there must be an affine DPIO. While DPIOs are the source of data availability interrupts, the DPCONs are used (among other things) to identify the NI that has produced ingress data to that GPP. Due to a known limitation, the number of DPIOs in a container must not be less than the number of running GPPs. The static DPL in this release defensively provides 8 DPIOs at boot-time, one for each running GPP.

Table continues on the next page...

Table continued from the previous page...

Object	Private to DPNI?	Cardinality	Comments
DPMAC	No	User-defined.	DPMACs are proxy objects which link DPNIs to external PHYs on the board. DPMACs effectively decouple DPNIs from the PHYs they are linked to (if they are indeed linked to an external PHY, which is in fact transparent to the DPNI). As such, the DPMACs are not "owned" by a DPNI, which is unaware of their presence, but they can be "connected" to the DPNI, via the DPL file or 'restool'. DPMACs can be connected to other types of objects, too, such as the EVB. Having DPMACs connected to external PHYs depends on the board wiring and is strictly confined to the SerDes configuration. See also: DPMAC configuration.

8.3.2.3.3.2 Static DPNI definition

The default DPL provides a simple DPNI object definition, under the dpni@0 node as follows:

```
dpni@0 {
   options = "";
   num_queues = <1>;
   num_tcs = <1>;
};
```

The DPNI object is linked to a DPMAC object, also created in the DPL, via the “connections” node as follows:

```
connections {
   connection@5{
       endpoint1 = "dpni@0";
       endpoint2 = "dpmac@5";
   };
};
```

The DPNI object can be more complex, as in the following enhanced example of a DPNI node:

```
dpni@1 {
     options = "DPNI_OPT_HAS_KEY_MASKING";
     num_tcs = <1>;
     num_queues = <8>;
     mac_filter_entries = <64>;
};
```

In this example, dpni@1 has more options declared than dpni@0 in the previous example. In addition, it can distribute traffic to more GPPs than dpni@0, as declared by the “num_queues” attribute.

The following section describes the DPNI bindings in the DPL file.

8.3.2.3.3.2.1 DPNI bindings

.

- The `num_queues` attribute indicates the number of queues to be used for transmission as well as the number of Rx queues (hash distribution size). This also implicitly defines the number of queues used for Tx Confirmation, since each "sender" uses a dedicated queue for confirmations. This may impact the number of necessary DPCON objects - see "DPAA2 objects dependencies" chapter for details on resourcing the DPNI.

- `num_tcs` represents the number of traffic classes; maximum supported value is 8.
- `options` allows the creation of a DPNI object with non-default options
- Other possible attributes are listed below. Unless otherwise stated, attributes with value <0> receive a default, non-trivial, value from the MC firmware and can be skipped from the DPL altogether.
  - `fs_entries`
  - `vlan_filter_entries`
  - `mac_filter_entries`

Note: See MC documentation for all available options and supported values.

8.3.2.3.3.3 DPMAC configuration

This section is a brief introduction to DPMAC objects and their relation to the DPNIs.

DPMACs are essentially proxies to external PHYs, which are board-level components and therefore not managed by the MC firmware.

DPMACs can be connected to other DPAA2 objects, such as DPNI, DPDMUX and DPSW. For example, to statically connect a DPMAC to a DPNI in the DPL file, the “connections” node is used:

```
connection@5{
     endpoint1 = "dpni@0";
     endpoint2 = "dpmac@5";
};
```

In this DPL example, DPNI0 is connected to DPMAC5, which the MC thereon connects to a lane depending on the current SerDes. Unlike most other DPAA2 objects, the id of the DPMAC (in this example, “5”) is relevant as the MC uses it to identify a physical MAC (at the moment, there is no other property of the DPMAC object to do that).

8.3.2.3.3.4 Dynamically creating a DPNI

This chapter documents the steps to create a DPNI using the *restool* utility and the *restool* wrapper scripts.

8.3.2.3.3.4.1 Using restool to create a DPNI

DPNIs can be dynamically created and plugged into the Linux container using the restool utility. Before creating a DPNI, one must create a number of DPAA2 objects (dependencies), for which multiple *restool* commands are needed. This section provides simple examples of commands that should be used to create a working DPNI (Linux network interface) and its dependencies. Usage of the Restool Wrapper Script bundled with the SDK is encouraged, because of their better ease-of-use.

In order to create an object, the “restool create” command must be executed and then the new object can be assigned to a container. For example, to create a DPBP object:

```
$ restool dpbp create
dpbp.1 is created under dprc.1
$ restool dprc assign dprc.1 --object=dpbp.1 --plugged=1
```

For automation purposes, the “--script" flag can be used, reducing the verbosity of the command output. Object properties can be specified at creation time as follows:

```
$ restool --script dpio create --channel-mode="DPIO_LOCAL_CHANNEL" --num-priorities=8
dpio.8
```

To create a DPNI, a number of DPMCP, DPBP and other dependencies are required, if they do not exist already in the container - refer to the DPAA2 objects dependencies chapter for details on the types and number of DPNI dependencies. The static DPL from the current release already defines 8 DPIO objects, one for each running GPP, so adding new DPIOs is not normally required.

Also, the maximum number of DPMACs supported on LS2088A and LS1088A are already created in the static (default) DPLs, so adding new ones is not necessary in the default configuration.

The general steps to create and configure a DPNI using restool are:

1. Create DPAA2 object dependencies (DPBPs, DPCONs, DPMCPs, etc);
2. Create and parametrize the DPNI;
3. Connect the DPNI to another object (typically but not necessarily a DPMAC).

The Restool Wrapper Script automatically take care of the DPNI resourcing and parametrization, therefore we encourage their use instead of bare *restool* for complex objects like the DPNI.

8.3.2.3.3.4.2 Restool Wrapper Scripts

User-friendly scripts are provided in the release rootfs to assist dynamic creation of DPNIs and associated dependencies. They also implement parameter restrictions and workarounds related to known limitations of the DPAA2 objects in the current SDK release.

The following scripts are available to interact with DPNI and DPMAC objects, respectively Linux network interfaces: ls-addni, ls-listni, ls-listmac.

1. **ls-addni**

   This script creates a new DPNI object, required dependencies (potentially DPBP, DPMCP, DPCON, DPMAC, depending on the options being passed to the script) and an associated Linux network interface. The script can be used to connect the newly-created DPNI to another DPNI, DPMAC or DPDMUX, which must be already created and not currently connected.

   The script supports a multitude of parameters to fine-tune configuration of the DPNI; in fact, it is intended to support every parameter as *restool* itself for creating DPNIs. An empty list of options will choose sensible defaults for maximal performance of the new DPNI, such as Rx hashing to the maximum number of cores.

   Adding a new DPNI has the effect of discovering the new object on the Linux mc-bus and probing it as a new Ethernet device. This results in a new Linux network interface becoming available. The new interface has the name `eth<X>`, where `X` depends on the order in which the interfaces are probed and on what other interfaces (e.g. PCIe NIC) are present. The mapping between the DPNI object and the interface name is shown by the `ls-listni` command.

   Utilization examples:

   - ```
     # ls-addni dpmac.6
     [70218.813064] fsl_dpaa2_eth dpni.4: Probed interface eth2
     Created interface: eth2 (object:dpni.4, endpoint: dpmac.6)
     ```

     This is probably the most typical usage example. It creates a network interface (eth2) and the underlying dpni (dpni.4) and connects it to an external MAC (dpmac.6).

     Connecting DPNIs to DPMACs is not the only option, though:

   - ```
     # ls-addni -n
     [70270.944458] fsl_dpaa2_eth dpni.5: Probed interface eth3
     Created interface: eth3 (object:dpni.5, endpoint: none)
     ```

     This command creates the unconnected object dpni.5 and the respective Linux interface eth3. Not being connected to anything, there is little practical use for this interface; therefore, a command such as the following would be used:

   - ```
     # ls-addni dpni.5
     [70312.255487] fsl_dpaa2_eth dpni.6: Probed interface eth4
     Created interface: eth4 (object:dpni.6, endpoint: dpni.5)
     ```

     This command creates another network interface eth4 (and the underlying dpni.6 object) and connects it with the previously created eth3 (dpni.5) interface.
     ```

Notes:

ls-addni --help list all supported options.

Although it is technically possible to connect a DPNI to itself, the wrapper scripts do not support this;

See the **LSDK Quick Start Guide for LS1088ARDB: Add and destroy network interfaces** for LS1088A particularities.

2. **ls-listni**

   This script lists all the dpni objects available in the root and child containers, the associated network interface name, the end point and the label.

   Output after running the above examples (dpni.0 through dpni.3 had been statically defined in the DPL):

```
# ls-listni
dprc.1/dpni.6 (interface: eth4, end point: dpni.5)
dprc.1/dpni.5 (interface: eth3, end point: dpni.6)
dprc.1/dpni.4 (interface: eth2, end point: dpmac.6)
dprc.1/dpni.3
dprc.1/dpni.2
dprc.1/dpni.1
dprc.1/dpni.0 (interface: eth1, end point: dpmac.2)
```

3. **ls-listmac**

   This script lists all the dpmac objects available in the root and child containers, the associated network interface name, the end point and the label.

   Output after running the above examples (dpni.0 had been connected to dpmac.2 in the static DPL):

```
# ls-listmac
dprc.1/dpmac.10
dprc.1/dpmac.9
dprc.1/dpmac.8
dprc.1/dpmac.7
dprc.1/dpmac.6 (end point: dpni.4)
dprc.1/dpmac.5
dprc.1/dpmac.4
dprc.1/dpmac.3
dprc.1/dpmac.2 (end point: dpni.0)
dprc.1/dpmac.1
```

8.3.2.3.4 DPAA2 Ethernet features

This section presents the individual functions of the Linux DPAA2 Ethernet driver.

8.3.2.3.4.1 Bring up the bootstrap DPNI interface

From Linux, interfaces are visible through the '`ifconfig`' command. The DPAA2 interfaces are named as “ `eth<X>` ”, where X depends on the order in which the interfaces are probed.

The default DPL file shipped with the current BSP release contains one statically-defined DPNI object (DPNI.0).

DPNI.0 is configured with a minimal set of resources – e.g. it can only receive traffic on GPP0 – and its intended uses are network boot and low-bandwidth traffic. For fully-featured DPNI objects, dynamic configuration is recommended (see Dynamically creating a DPNI).

For IP connectivity between the default interface and an external host, first assign a valid IP address to it as in the following example:

```
$ ifconfig eth1 192.168.1.2
```

Assuming the remote peer has address 192.168.1.1, ping to test as shown:

```
$ ping 192.168.1.1
PING 192.168.1.1 (192.168.1.1) 56(84) bytes of data.
64 bytes from 192.168.1.1: icmp_seq=1 ttl=64 time=87.0 ms
```

8.3.2.3.4.2 Primary MAC address change

Changing the primary MAC address of a Linux Ethernet interface is supported without the need to bring down the interface.

For example:

```
$ ifconfig eth1 hw ether 02:00:C0:01:02:0a
```

```
$ ip link set dev eth1 address 02:00:C0:01:02:0b
```

8.3.2.3.4.3 Scatter/gather configuration

The Ethernet driver supports scatter/gather (S/G) on both the transmit and receive side. The S/G option can be configured through ethtool on Tx; on Rx, S/G support is always on. For example, in order to see the current state of the device features and hardware offloads for device ni0 :

```
$ ethtool -k eth1
Features for eth1:
[…]
scatter-gather: on
        tx-scatter-gather: on
[…]
```

In order to change the S/G status of the Linux Ethernet interface ni0:

```
$ ethtool -K eth1 sg off
Actual changes:
scatter-gather: off
        tx-scatter-gather: off
generic-segmentation-offload: off [requested on]

$ ethtool -K eth1 sg on
Actual changes:
scatter-gather: on
        tx-scatter-gather: on
generic-segmentation-offload: on
```

Notes:

- S/G support on the *egress* path, together with High DMA, which is also supported, allows for efficiently transmitting TCP segments from user-space, without copying them to kernel-space first (“Tx zero-copy”).
- Egress S/G is necessary for other kernel features such as generic segmentation offload (GSO, implicitly turned on).
- The Ethernet driver support for S/G frames on the *ingress* path is transparent to the user.

8.3.2.3.4.4 Checksum offload configuration

The Ethernet driver supports hardware offloading of both Rx checksum validation and Tx checksum generation for TCP and UDP over IPv4/IPv6. The hardware checksum offload can be configured through ethtool.

For viewing the current state of the feature use the “-k” flag:

```
$ ethtool –k eth1
Features for eth1:
[…]
rx-checksumming: on
tx-checksumming: on
        tx-checksum-ipv4: on
        tx-checksum-ipv6: on
[…]
```

The checksum offload can be controlled separately on Rx and Tx paths as follows:

```
$ ethtool –K eth1 rx on|off
$ ethtool –K eth1 tx on|off

$ ethtool -k eth1 | grep tx-checksumming
tx-checksumming: off
```

8.3.2.3.4.5 MAC filtering

The DPAA2 hardware supports unicast and multicast MAC filters on the ingress path. In Linux, MAC unicast filtering can be accomplished with the help of MACVLAN interfaces. Kernel configuration and DPNI configuration are required to enable this feature, as follows:

- To enable support in the kernel, CONFIG_MACVLAN must be selected at compile-time, from the kernel menuconfig: `“Device Drivers -> Network device support -> Network core driver support -> MAC-VLAN support” .`

The Linux Ethernet driver allows adding and deleting of MAC filters via the standard “ip” command. An example of adding/deleting a MAC unicast address is the following:

```
$ ip link add link eth1 address <macvlan_mac_addr> eth1.1 type macvlan
$ ifconfig eth1.1 up
[…]
$ ip link delete eth1.1 type macvlan
```

Adding a multicast address is also possible using the “ip” command as follows:

```
$ ip maddr add 01:00:00:00:00:01 dev eth1
```

8.3.2.3.4.6 Large frame support

The DPAA2 hardware supports large frames. The Ethernet driver correlates between the Layer-2 maximum frame length (MFL) and Layer-3 MTUs. The maximum MTU that a Linux user can request on a DPAA2 Ethernet interface is 10222 bytes.

Notes:

- Outgoing packets larger than the current MTU are going to be fragmented by the kernel stack.
- All Ethernet devices on the same LAN must have the same MTU
- Ingress frames larger than MTU are accepted by the Ethernet driver

8.3.2.3.4.7 Generic receive offload

The DPAA2 Ethernet driver is integrated with the kernel's generic receive offload (GRO) support. GRO is enabled by default and is configurable via "ethtool":

```
$ ethtool -k eth1 | grep generic-receive-offload
 generic-receive-offload: on
$ ethtool -K eth1 gro off
$ ethtool -k eth1 | grep generic-receive-offload
 generic-receive-offload: off
```

NOTE

For better performance, GRO should be disabled on the receiving interfaces in certain scenarios such as IP Forwarding.

8.3.2.3.4.8 Egress traffic shaping

The DPAA2 Ethernet interface supports traffic shaping in the egress path. Egress shaping can be set or cleared via a per-interface entry in SysFS:

```
$ echo M N > /sys/class/net/eth1/tx_shaping
```

where:

M is the maximum throughput, expressed in Mbps.

N is the maximum burst size, expressed in bytes, at most 63487.

To remove shaping, use M=0, N=0.

8.3.2.3.4.9 Rx hashing

The DPAA2 Ethernet driver supports hash distribution of ingress flows, based on some of the common L2/L3/L4 fields. Configuration is done via standard "ethtool" support as follows:

```
$ ethtool –N <ethX> rx-flow-hash <proto_type> <header_fields>
```

The set of header fields from which the hash key is extracted is configured globally for all protocols and the protocol type parameter is ignored.

The following fields are supported:

- m - Ethernet destination address
- v - VLAN tag
- t - L3 protocol
- s - IPv4 source address
- d - IPv4 destination address
- f - L4 bytes 0 & 1 [TCP/UDP source port]
- n - L4 bytes 2 & 3 [TCP/UDP destination port]

The “r” flag (discard all packets of this flow type) is not supported.

For example, Rx hashing based on IP source and destination address can be configured with the following command:

```
$ ethtool –N <ethX> rx-flow-hash udp4 sd
```

The current hashing configuration can be viewed using the “-n” flag:

```
$ ethtool -n <ethX> rx-flow-hash udp4
```

The protocol type parameter is ignored; the configuration applies to both UDPv4 and TCPv4.

Note: By default, Ethernet interfaces start with hashing enabled on a 5-tuple key (IP proto, IP src/dst addresses, L4 src/dst ports). If an Ethernet interface is created with a single queue then hashing is not supported.

Interfaces created dynamically with "ls-addni" have a number of queues equal to the number of available CPUs, unless explicitly requested otherwise, so they'll have hashing enabled by default. For DPNIs statically defined inside a DPL file, in order to allow hashing the "num_queues" property must have a value larger than 1 and there must also be a sufficient number of DPCON objects available.

For full details and examples on dynamic DPNI creation, refer to this chapter.

8.3.2.3.4.10 Rx flow steering

The DPAA2 Ethernet driver supports steering of ingress traffic, directing flows to specific GPPs based on exact-match operations on some of the common L2/L3/L4 fields. The advantage versus Rx hashing is cache locality of ingress data: the user-space applications that actually process the traffic make better use of the local GPP's cache than if the traffic were processed on another GPP. The disadvantage stems from the static configuration of flow affinity and from the fact that flow characteristics (e.g. L4 ports) must be known in advance, which is not always possible in real scenarios.

Configuration is done via standard "ethtool" support as follows:

```
$ ethtool -N eth1 flow-type <proto_type> <header_field> <value> [m <mask>] action <cpu_id>
```

Steering is supported for the following protocols:

- ethernet (flow-type `ether`)
- IPv4 (flow-type `ip4`)
- TCP, UDP over IPv4 (flow-type `tcp4`, `udp4`)

Supported fields are as follows:

- `src`, `dst` (L2 source/destination address; only for `ether` flow type)
- `dst-mac` (only for `ip4`, `udp4`, `tcp4` flow types)
- `vlan` (all flow types)
- `l4proto` (only for `ip4`)
- `src-ip`, `dst-ip`, `src-port`, `dst-port` (for `ip4`, `udp4`, `tcp4`)

Masking of header fields is also supported.

For example, in order to set up flow steering based on destination IP:

```
$ ethtool -N eth1 flow-type ip4 dst-ip 192.168.1.0 action 0
```

or subnet:

```
$ ethtool -N eth1 flow-type ip4 dst-ip 192.168.2.0 m 0.0.0.255 action 1
```

NOTE

The MC firmware and Linux Ethernet driver will only fully configure flow-steering if `DPNI_OPT_HAS_KEY_MASKING` is set in the "options" list of the DPNI object either via the DPL node or via restool - e.g.:

```
dpni@1 {
[…]
    options = "DPNI_OPT_HAS_KEY_MASKING";
[…]
};
```

respectively:

```
restool dpni create [...] --options=DPNI_OPT_HAS_KEY_MASKING
```

NOTE

On LS1088A only limited flow steering capabilities are offered. LS1088A does not support the `DPNI_OPT_HAS_KEY_MASKING` option, thus it won't allow rules with different keys in the classification table. In other words, all rules in the classification table must be based on the same header field(s). Also, `m` option is not supported and it will be silently ignored.

8.3.2.3.4.11 Flow Control Pause Frames

The DPAA2 Ethernet interfaces support sending and responding to pause frames, as part of the Ethernet flow control mechanism. The behavior of the pause frames is described in the IEEE 802.3x standard. In a nutshell, in a scenario involving a full duplex link, if the sender is sending at a higher rate than the receiver can process frames, the receiver can choose to send a special kind of frame, called pause frame, which asks the sender to halt the transmission of traffic for a specified period of time.

Pause frame control is integrated into ethtool. By default it's enabled for both Tx and Rx.

```
~# ethtool -a eth1
Pause parameters for eth1:
Autonegotiate:  on
RX:             on
TX:             on

~# ethtool -A eth1 rx off
~# ethtool -a eth1
Pause parameters for eth1:
Autonegotiate:  on
RX:             off
TX:             on
```

Currently, there's no support in configuring pause frame autonegotiation independently from link general autonegotiation. Hence, if link autonegotiation (e.g. rate and duplex) is on, it is on pause frames as well, and viceversa.

Pause frames are interpreted at the MAC level. Therefore, the counters for pause frames are visible when configuring netdevice objects for DPMAC objects using the `CONFIG_FSL_DPAA2_MAC_NETDEVS=y` kernel option. This option will bring up a set of additional Linux network interfaces named `macX`, one for each probed DPMAC object in the system.

```
~# ethtool -S mac1 | grep pause
     rx pause: 106731474
     tx b-pause: 15287253
```

If the driver is configured with Tx pause frames on, the hardware will start sending pause frames when the interface enters a congestion state on the Rx side.

If the driver is configured with Rx pause frames on, it will respond to any pause frames received on the line by reducing the send rate.

NOTE

Interrogating the current state of the flow control support and changing it through ethtool works when the interface is up.

8.3.2.3.4.12 Ethernet Priority-based Flow Control

The DPAA2 Ethernet interfaces support sending and responding to 802.1Qbb PFC (Priority-based Flow Control) frames, also known as CBFC (Class Based Flow Control) frames. PFC is a function of the 802.1 DCB (Data Center Bridging) standard, enabling lossless semantics at L2 on the Ethernet medium. Eight different classes of service (802.1p Ethernet priorities) are available as expressed through the 3-bit PCP field in an IEEE 802.1Q (VLAN) header added to the frame.

The DPAA2 Ethernet driver supports enabling PFC for a subset of the traffic classes. This configuration is done using a higher level protocol, LLDP - Link Layer Discovery Protocol. In Ubuntu, this protocol is implemented by the lldpad package, containing lldpad - the agent daemon - and lldptool - the client program.

Before attempting to configure PFC, make sure lldpad is installed and running:

```
~# apt-get update
~# apt-get install -y lldpad
~# service --status-all
~# service lldpad status
  lldpad.service - LSB: Start and stop the lldp agent daemon
Loaded: loaded (/etc/init.d/lldpad; bad; vendor preset: enabled)
Active: active (running) since Mon 2017-08-21 11:43:45 UTC; 2h 33min ago
Docs: man:systemd-sysv-generator(8)
CGroup: /system.slice/lldpad.service
—4542 /usr/sbin/lldpad -d
```

The LLDP agent daemon will register all the active interfaces in the system. In order to configure PFC for an interface (e.g. eth1) please run the following commands:

- Set the LLDP operation mode - in this case, to send and receive LLDP packets. This is required in order for PFC changes to take effect.

  ```
  lldptool –L –i eth1 adminStatus=rxtx
  ```

- Enable PFC for priorities 1, 2, and 4 on ni0.

  ```
  lldptool -T -i eth1 -V PFC -c enabled=1,2,4
  ```

- Display priorities enabled for PFC on ni0.

  ```
  lldptool -t -i eth1 -V PFC -c enabled
  ```

In order to disable PFC, you can run the following command:

```
lldptool -T -i eth1 -V PFC -c enabled=none
```

When setting PFC for the first time since boot, the DPAA2 Ethernet driver will configure static ingress traffic classification based on VLAN PCP. In order for this to work, you need to configure the DPNI with a number of traffic classes that's greater than 1 - preferably `num_tcs=8`, since there are a total of 8 priorities handled by the 3-bit PCP VLAN field.

The LLDP interface configuration is persistent across reboot and stored in the lldpad configuration files.

It's not advised to change the PFC configuration when the interface is handling heavy traffic.

There's a current **known limitation** for PFC to work only with DPNIs created using the DPL. DPNIs created with restool will not behave as expected.

8.3.2.3.4.13 XDP support

The DPAA2 Ethernet driver offers support for XDP (eXpress Data Path) programs. Support is enabled by default and no special configuration is needed.

XDP is a high performance data path in the Linux kernel, which allows for fast and programmable frame processing.

XDP programs are based on eBPF (extended Berkeley Packet Filter) and some basic examples can be found in the kernel source tree, in samples/bpf. Samples of the associated userspace apps that load the XDP program and attach it to the desired network interface can also be found there. For example, the "xdp1" sample program can be loaded by running:

```
./samples/bpf/xdp1 -N <interface_index>
```

The userspace applications that load XDP programs have to be built for arm64. XDP programs are compiled using clang/llvm, with minimum required version being 6.0. We recommend building natively, following the steps described in samples/bpf/README.rst.

The currently supported actions are:

- *XDP_DROP* : any frame for which this action is selected is dropped immediately by the driver
- *XDP_PASS* : frame follows the standard processing path and is sent to the network stack
- *XDP_TX* : frame is forwarded back to the same interface
- *XDP_REDIRECT* : frame is forwarded to another interface

The driver also supports header updates that change the frame header size.

Scatter/gather frames are not handled by the XDP program and will go through the regular path to the stack.

8.3.2.3.4.13.1 Building XDP Kernel Samples

In order to use XDP programs from the kernel `bpf/samples` folder, these are the steps for building them natively:

1. Prerequisites:

   Use a Layerscape board with latest LSDK images, that has external network conectivity at least 6GB of disk space.

2. Install dependent packages:

   ```
   apt-get install git
   git apt-get install make
   apt-get install gcc
   apt-get install bc
   apt-get install elfutils
   apt-get install libelf-dev
   apt-get install bison
   apt-get install flex
   apt-get install cmake
   ```

3. Build the latest version of LLVM and clang (required to be >= 7.0):

   ```
   git clone https://git.llvm.org/git/llvm.git/ LLVM
   cd LLVM/tools
   git clone https://git.llvm.org/git/clang.git/
   cd ../..
   mkdir <llvm-build-dir>; cd <llvm-build-dir>
   cmake -DCMAKE_BUILD_TYPE=Release -DLLVM_TARGETS_TO_BUILD="BPF" ../LLVM/
   make -j 8
   ```

4. Download kernel sources from the LSDK release

5. Build the bpf samples:

```
cd <kernel-src-dir>
make mrproper
make defconfig; make lsdk.config
make headers_install
make samples/bpf/ LLC=<llvm-build-dir>/bin/llc CLANG=<llvm-build-dir>/bin/clang
```

The resulting binaries will be located in `<kernel-src-dir>/samples/bpf`.

8.3.2.3.4.14 MQPRIO qdisc support

The DPAA2 Ethernet driver supports the MQPRIO qdisc, configurable through the tc tool.

MQPRIO (Multiqueue Priority Qdisc) is a simple queuing discipline that allows mapping traffic flows to hardware queue ranges, using priorities and a configurable priority to traffic class mapping. When creating the qdisc, the user can pass the number of traffic classes handled by the netdevice, the skb priority to traffic class map, and the hardware offloading flag.

For example:

```
$ tc qdisc add dev <ethX> root handle 1: mqprio num_tc 2 map 0 0 1 1 hw 1
```

The above translates to:

- The mqprio qdisc has 2 traffic classes (num_tc 2)
- The qdisc depends on hw offloading (hw 1)
- The skb prio to traffic class map is as follows:
  - skb prio 0 -> tc 0
  - skb prio 1 -> tc 0
  - skb prio 2 -> tc 1
  - skb prio 3 -> tc 1

Note: We only suppport the hardware offloading mode. Setting the "hw" param to 0 is not supported.

For setting the skb priority, the clsact qdisc can be used. Then we use the u32 filter to assign the skb priority based on traffic flow characteristics. This requires a recent iproute2-tc with clsact support compiled in:

```
$ tc qdisc add dev <ethX> clsact
$ tc filter add dev <ethX> egress prio 1 u32 match ip dport 7776 0xffff action skbedit priority 0
$ tc filter add dev <ethX> egress prio 1 u32 match ip dport 7777 0xffff action skbedit priority 1
$ tc filter add dev <ethX> egress prio 1 u32 match ip dport 7778 0xffff action skbedit priority 2
$ tc filter add dev <ethX> egress prio 1 u32 match ip dport 7779 0xffff action skbedit priority 3
```

In the above example, the destination port is used to assign an skb priority level. Outgoing IPv4 frames with port id 7778 and 7779 will be treated with highest priority.

Note: In order to use tc mqprio with the DPAA2 Ethernet driver, make sure the following kernel options are enabled:

```
CONFIG_NET_SCHED=y
CONFIG_NET_SCH_MQPRIO=y
```

Also, in order to run above examples, the following kernel options are also needed:

```
CONFIG_NET_CLS=y
CONFIG_NET_CLS_ACT=y
CONFIG_NET_ACT_SKBEDIT=y
CONFIG_NET_CLS_U32=y
CONFIG_CLS_U32_PERF=y
```

```
CONFIG_CLS_U32_MARK=y
CONFIG_NET_EMATCH_U32=y
```

Note: The DPNI has to be configured with a number of traffic classes greater than one - the maximum supported is `num_tcs`=8. Make sure the `num_tc` parameter passed at mqprio qdisc creation is not higher than the number of traffic classes supported by the DPNI.

8.3.2.3.4.15 CEETM support

DPAA2 platforms offer scheduling, shaping and prioritization capabilities through CEETM (Customer Edge Egress Traffic Management). The purpose of the CEETM block is to enhance networking performances by moving the egress QoS logic from software to hardware.

This section briefly describes what is supported and how CEETM can be configured through the Linux traffic control tool (tc) by using a custom queuing discipline.

8.3.2.3.4.15.1 Features

Each network interface (DPNI) can be associated with a LNI (logical network interface) containing a class queue channel. We don't support more than one channel per LNI. The LNI channel allows dual-rate shaping, which can be configured by specifying the CIR (committed information rate) and/or EIR (excess information rate). CBS (committed burst size) and EBS (excess burst size) values can also be configured.

We also support scheduling of class queues inside the channel; the number of queues cannot be larger than the configured number of traffic classes ("num_tcs" DPNI option), with a maximum value of 8.

Queues can be independent or part of a group:

- inside a group, queues are selected based on the WBFS (weighted bandwidth fair scheduling) algorithm. We support at most two class queue groups (referred to as group A and group B) with up to 4 queues each; if a single group is used (group A), up to 8 queues can be configured to be part of it.
- independent queues have fixed priorities and are subject to a strict priority scheduling (i.e. queue 1 will always be higher prio than queue 2)

Weighted queues share the priority of the group they belong to. Groups have configurable strict priorities relative to the independent queues. See the next section for an example on how to configure both weighted and independent queues.

We consider 0 to be the highest priority level.

8.3.2.3.4.15.2 Prerequisites

In order to use the CEETM feature, it must first be enabled in the kernel config file:

```
CONFIG_FSL_DPAA2_ETH_CEETM=y
```

Also, the following kernel option is needed:

```
CONFIG_NET_SCHED=y
```

The CEETM TC library (*q_ceetm.so*) should be located under /usr/lib/tc. It is built and deployed by default, without any user action needed.

8.3.2.3.4.15.3 Usage

You can see the ceetm qdisc's help message by running the following command:

```
$ tc qdisc add ceetm help
Usage:
... qdisc add ... ceetm type root
... class add ... ceetm type root [cir CIR] [eir EIR] [cbs CBS] [ebs EBS] [coupled C]
```

```
... qdisc add ... ceetm type prio [prioA PRIO] [prioB PRIO] [separate SEPARATE]
... class add ... ceetm type prio [mode MODE] [weight W]
Update configurations:
... class change ... ceetm type root [cir CIR] [eir EIR] [cbs CBS] [ebs EBS] [coupled C]

Qdisc types:
root - associate a LNI to the DPNI
prio - configure the LNI channel's Priority Scheduler with up to eight classes

Class types:
root - configure the LNI channel
prio - configure an independent or weighted class queue

Options:
CIR - the committed information rate of the LNI channel
        dual-rate shaper (required for shaping scenarios)
EIR - the excess information rate of the LNI channel
        dual-rate shaper (optional for shaping scenarios, default 0)
CBS - the committed burst size of the LNI channel
        dual-rate shaper (required for shaping scenarios)
EBS - the excess of the LNI channel
        dual-rate shaper (optional for shaping scenarios, default 0)
C - shaper coupled, if both CIR and EIR are finite, once the
        CR token bucket is full, additional CR tokens are instead
        added to the ER token bucket
PRIO - priority of the weighted group A / B of queues
SEPARATE - groups A and B are separate
MODE - scheduling mode of class queue, can be:
        STRICT_PRIORITY
        WEIGHTED_A
        WEIGHTED_B
W - the weight of the class queue in the weighted group
```

8.3.2.3.4.15.4 Example

We present here an example of how tc ceetm qdisc can be used to create a complex egress shaping and scheduling configuration.

We start by configuring the LNI channel to allow a maximum egress rate of 1Gbps:

```
tc qdisc add dev <ethX> root handle 1: ceetm type root
tc class add dev <ethX> parent 1: classid 1:1 ceetm type root cir 1000mibit
```

We configure queue_1 and queue_2 to be part of group A, with a group priority of 3, and queue_4 and queue_5 to be part of group B with prio 1. Independent queues queue_0 and queue_3 are also configured. The resulting order of priorities is as follows (highest to lowest): {queue_0, group_B, queue_3, group_A}

Inside group A, queue_1 and queue_2 have equal weights; inside group B, queue_5 is given three times more bandwidth than queue_4. The weights are not absolute values, the relevant information is the ratio between them; it's recommended to use the value 100 for the queue with the lowest bandwidth.

```
tc qdisc add dev <ethX> parent 1:1 handle 2: ceetm type prio prioA 3 prioB 1 separate 1
tc class add dev <ethX> parent 2: classid 2:1 ceetm type prio mode STRICT_PRIORITY
tc class add dev <ethX> parent 2: classid 2:2 ceetm type prio mode WEIGHTED_A weight 100
tc class add dev <ethX> parent 2: classid 2:3 ceetm type prio mode WEIGHTED_A weight 100
tc class add dev <ethX> parent 2: classid 2:4 ceetm type prio mode STRICT_PRIORITY
tc class add dev <ethX> parent 2: classid 2:5 ceetm type prio mode WEIGHTED_B weight 100
tc class add dev <ethX> parent 2: classid 2:6 ceetm type prio mode WEIGHTED_B weight 300
```

Additionally, we define flows based on IP destination address and match them to the class queues:

```
# Flow 1 - queue 0
tc filter add dev <ethX> parent 1: protocol ip u32 match ip dst 192.85.2.2/32 flowid 1:1
tc filter add dev <ethX> parent 2: protocol ip u32 match ip dst 192.85.2.2/32 flowid 2:1

# Flow 2 - queue 1
tc filter add dev <ethX> parent 1: protocol ip u32 match ip dst 192.85.2.3/32 flowid 1:1
tc filter add dev <ethX> parent 2: protocol ip u32 match ip dst 192.85.2.3/32 flowid 2:2

# Flow 3 - queue 2
tc filter add dev <ethX> parent 1: protocol ip u32 match ip dst 192.85.2.4/32 flowid 1:1
tc filter add dev <ethX> parent 2: protocol ip u32 match ip dst 192.85.2.4/32 flowid 2:3

# Flow 4 - queue 3
tc filter add dev <ethX> parent 1: protocol ip u32 match ip dst 192.85.2.5/32 flowid 1:1
tc filter add dev <ethX> parent 2: protocol ip u32 match ip dst 192.85.2.5/32 flowid 2:4

# Flow 5 - queue 4
tc filter add dev <ethX> parent 1: protocol ip u32 match ip dst 192.85.2.6/32 flowid 1:1
tc filter add dev <ethX> parent 2: protocol ip u32 match ip dst 192.85.2.6/32 flowid 2:5

# Flow 6 - queue 5
tc filter add dev <ethX> parent 1: protocol ip u32 match ip dst 192.85.2.7/32 flowid 1:1
tc filter add dev <ethX> parent 2: protocol ip u32 match ip dst 192.85.2.7/32 flowid 2:6
```

Assuming the initial throughput of each flow was 200Mbps, the final output is:

```
flow 1 (queue_0) - 200Mbps
flow 2 (queue_1) - 100Mbps
flow 3 (queue_2) - 100Mbps
flow 4 (queue_3) - 200Mbps
flow 5 (queue_4) - 200Mbps
flow 6 (queue_5) - 200Mbps
```

If initial throughput per flow was 600Mbps, the final output is:

```
flow 1 (queue_0) - 600Mbps
flow 2 (queue_1) - 0Mbps
flow 3 (queue_2) - 0Mbps
flow 4 (queue_3) - 0Mbps
flow 5 (queue_4) - 100Mbps
flow 6 (queue_5) - 300Mbps
```

Note: In order to run this example, the following kernel configs are also needed:

```
CONFIG_NET_CLS=y
CONFIG_NET_CLS_ACT=y
CONFIG_NET_CLS_U32=y
CONFIG_NET_EMATCH=y
CONFIG_NET_EMATCH_U32=y
```

8.3.2.3.4.16 Interface statistics

DPAA2 Ethernet interface counters can be read via either of two standard tools, but there is a subtle difference:

- `ifconfig ethX`: counters reflect packets received by the Ethernet driver – i.e. those frames that have passed through the Rx filters (if any are active) and have been effectively processed by the Ethernet driver on the GPP, and possibly by the kernel stack. These are software counters, maintained by the Ethernet driver and the networking stack.
- `ethtool -S ethX`: counters reflect more detailed counters, from three categories:
  - Statistics maintained by the DPAA2 hardware. These largely correspond in meaning to the standard "ifconfig" counters, but the values may be different from the "ifconfig" counters - i.e. they may reflect frames that have not been received on the GPP, such as those dropped by the ingress policer or due to MAC filtering. Also noteworthy is that retrieving these counters requires a series of calls into the MC firmware, which could make the operation potentially slower.
  - Advanced counters, specific to the DPAA2 Ethernet driver. These are software-maintained driver-specific counters which do not fit into the standard " `ifconfig` " set.
  - QBMan hardware counters showing instantaneous values for the frame queues and buffer pool associated with the DPNI.

The following detailed counters are presented by the '`ethtool -S`' command:

- Hardware-maintained counters (prefixed by the "[hw]" tag):
  - `rx frames`: number of valid frames received from the DPNI hardware
  - `rx bytes`: number of bytes comprised within the "rx frames" counter
  - `rx mcast frames`: number of valid multicast frames
  - `rx mcast bytes`: number of bytes included in "rx mcast frames"
  - `rx bcast frames`: number of valid broadcast frames
  - `rx bcast bytes`: number of bytes included in "rx bcast frames"
  - `tx frames`: number of valid frames presented for transmission
  - `tx bytes`: number of bytes included in "tx frames"
  - `tx mcast frames`: number of valid egress multicast frames
  - `tx mcast bytes`: number of bytes included in "tx mcast frames"
  - `tx bcast frames`: number of valid egress broadcast frames
  - `tx bcast bytes`: number of bytes included in "tx bcast frames"
  - `rx filtered frames`: number of valid frames but dropped because e.g. of MAC filtering
  - `rx discarded frames`: number of frames with various physical errors
  - `rx nobuffer discards`: number of frames discarded due to lack of buffers
  - `tx discarded frames`: number of frames with Tx errors
  - `tx confirmed frames`: number of Tx confirmed frames
  - `tx dequeued frames`: number of Tx frames dequeued by WRIOP from the egress queues of this DPNI
  - `tx dequeued bytes`: number of bytes included in "tx dequeued frames"
  - `tx rejected frames`: number of Tx frames enqueued by the core but rejected by QMan
  - `tx rejected bytes`: number of bytes included in "tx rejected frames"
- Software-maintained, driver-specific counters (prefixed by the "[sw]" tag):
  - `tx conf frames`: number of frames presented back to the Ethernet driver in the Tx confirmation queues. In an idle system, this counter should be equal to "tx frames"
  - `tx conf bytes`: number of bytes comprised by the "tx conf frames" counter

- `tx sg frames`: number of egress frames in scatter-gather format these are a subset of "tx frames", the difference being contiguous frames
- `tx sg bytes` : number of bytes comprised in "tx sg frames"
- `tx realloc frames`: number of frames which had to be reallocated in the driver due to insufficient skb headroom if a significant number of Tx frames are realloc'ed, it may be an indicator of suboptimal networking performance
- `rx sg frames`: number of frames received in scatter-gather format typically this reflects frames larger than the largest buffer that can be used at the time of reception
- `rx sg bytes`: number of bytes comprised in "rx sg frames"
- `enqueue portal busy`: number of times the Ethernet driver had to retry the frame enqueue command (on the egress path) due to QBMan portal being busy
- `dequeue portal busy`: number of times the Ethernet driver had to retry the frame dequeue command (on the ingress path) due to QBMan portal being busy
- `channel pull errors`: number of dequeue errors which are not due to the portal being busy
- `cdan` : number of Channel Dequeue Available Notifications (CDANs) received by the Ethernet driver (Rx and Tx Conf paths). Each CDAN corresponds to one DPIO interrupt and triggers a NAPI processing cycle which can process Rx or Tx Conf frames (or both).
- `tx congestion state`: whether the Tx queues are currently congested or not if congestion state is 1, it means one or more Tx queues have stopped and are waiting for the hardware to finish transmitting the frames already enqueued from the Ethernet driver
- `xdp drop`: number of frames processed by an XDP program for which the XDP_DROP action was selected
- `xdp tx`: number of frames processed by an XDP program for which the XDP_TX action was selected
- `xdp tx errors`: number of frames processed by an XDP program for which the XDP_TX action was selected but an error occured during actual transmission
- `xdp redirect`: number of frames processed by an XDP program for which the XDP_REDIRECT action was selected

- QBMan counters:
  - `rx pending frames`: total number of frames currently in the Rx FQs associated with the DPNI
  - `rx pending bytes`: number of bytes included in "rx pending frames"
  - `tx conf pending frames`: total number of frames currently in the Tx confirmation FQs associated with the DPNI
  - `tx conf pending bytes`: number of bytes included in "tx conf pending frames"
  - `buffer count`: number of buffers currently in the buffer pool associated with the DPNI"

8.3.2.3.5 Performance considerations

This section presents several aspects that need to be taken into account when tuning a DPAA2 system for kernel networking performance.

- **Ingress flow distribution**

  Flows are defined by a distribution key (n-tuple) composed of several header fields. All ingress frames that belong to a flow (they have the same value of the fields included in the key) are processed on the same core.

  In order to achieve a balanced load among the system cores, two strategies may be employed:

  - In scenarios with large number of flows or where ingress traffic characteristics are not known: rely on hash distribution for load balancing; the default key is composed of {IP src address, IP dst address, IP next proto, L4 src port, L4 dst port} but can be changed using ethtool. A well balanced distribution requires several hundred flows on an 8-core system; the lower the number of flows, the higher the difference in number of frames directed to each core. See section Rx hashing for more details.

— In scenarios where we have a low number of flows with well-known characteristics (for example: we know beforehand or can determine at runtime the value of certain header fields, like source IP address), flows can be manually affined to cores using exact match rules configured in ethtool. See section Rx flow steering for more information.

- **Flow control**

  The DPAA2 Ethernet driver starts with flow control enabled by default.

  For best performance, it is recommended that pause frames configuration matches the settings of the peer, especially on the Tx side (i.e. should only have pause frame generation enabled if the peer can respond to pause frames). When unsure of peer flow control capabilities, it's best to locally disable pause frames (ethtool -A <ethX> tx off).

  For more information on flow control support, see section Flow Control Pause Frames.

- **DPNI parameters at object creation**

  DPNI objects should be created with a maximal configuration if networking performance is desired.

  For distribution of ingress traffic, the most important setting is num_queues, which should equal the number of cores on which the DPNI can receive ingress frames. In case of DPNIs created statically using a DPL file, sufficient DPCON objects (one per DPNI per core) must also be provided; for dynamically created DPNIs, the ls-addni script handles both DPCON dependencies and optimal configuration of num_queues value.

  In case flow steering is to be used on the DPNI, value of num_fs_entries (maximum number of classification rules that can be added on the network interface) can be configured according to user requirements. Default is 64 entries.

- **Optimal test setups for performance measurements**

  For IP forwarded traffic, using affine flows (one per core per interface) is the setup that yields best results.

  If zero-loss throughput is measured, it is important to avoid additional work in the system (unrelated peripheral interrupt sources, system services running in the background), as spikes in activity on a core can lead to loss of frames even at lower traffic rates.

  One source of spikes in activity are the 25G interfaces found on the LX2160ARDB which use a IN112525 1st gen Inphi retimer for improving the signal integrity. For the interfaces to work, a prototype driver for In112525 chip is used in Linux. This driver does retraining of retimer's internals each two seconds when no signal is detected. This requires cpu-time and may bring a performance impact in certain conditions (RFC2544 with a small frame size). It can be avoided if 25G ports have valid link partners or when driver is disabled (CONFIG_INPHI_PHY=n).

  For termination traffic, flow steering is also recommended with one flow per core, although in some scenarios using a large number (for example: 256 flows on an 8 core system) of hashed flows yields similar results. In case of TCP traffic, configuring flow affinity on the sender side (for ACK packets) may also help. When possible, the userspace application should be affined to the same core that performs the kernel frame processing (for example: "-T" parameter for netperf, or use taskset).

  Transmission of UDP frames is expected to perform slightly worse than TCP Tx due to a software limitation. On the ingress side there should be no obvious performance gap between the two.

For additional general performance optimization guidelines, see the General networking performance considerations section.

8.3.2.4 Setting up Ethernet Switch Capability

8.3.2.4.1 Ethernet Switch overview

The following switch features are supported:

- Dynamic learning
- Adding/deleting static FDB entries
- Adding/deleting static multicast entries
- Configuring multicast groups

- Flooding of broadcast and multicast traffic
- Forwarding of unicast traffic that is both VLAN tagged and untagged
- Setting STP state of ports

Important notes:

- Learning is supported and enabled by default.
- Learned FDB entries cannot be displayed.
- There is no support to flush the FDB.

Acronyms and abbreviations:

- DPSW - DPAA2 object modelling an L2 Switch
- DPNI - DPAA2 object modelling a network interface

8.3.2.4.2 Switch object creation

A switch object can be created:

- Dynamically using the restool as described in Using restool for dynamic object creation or
- Statically in a DPL file as described in Using the data path layout file (DPL)

8.3.2.4.2.1 Using restool for dynamic object creation

A switch can be created at run-time, using restool. Before creating the switch, a number of DPAA2 objects (dependencies) have to be added, for which multiple restool commands are needed. Switch requires at least a DPMCP object, which is created like:

```
$ restool dpmcp create
```

The following section describes the main commands to create a switch starting from the **dpl-eth.0x2A_0x41.dtb** DPL file.

Figure 146. Dynamic DPSW demo

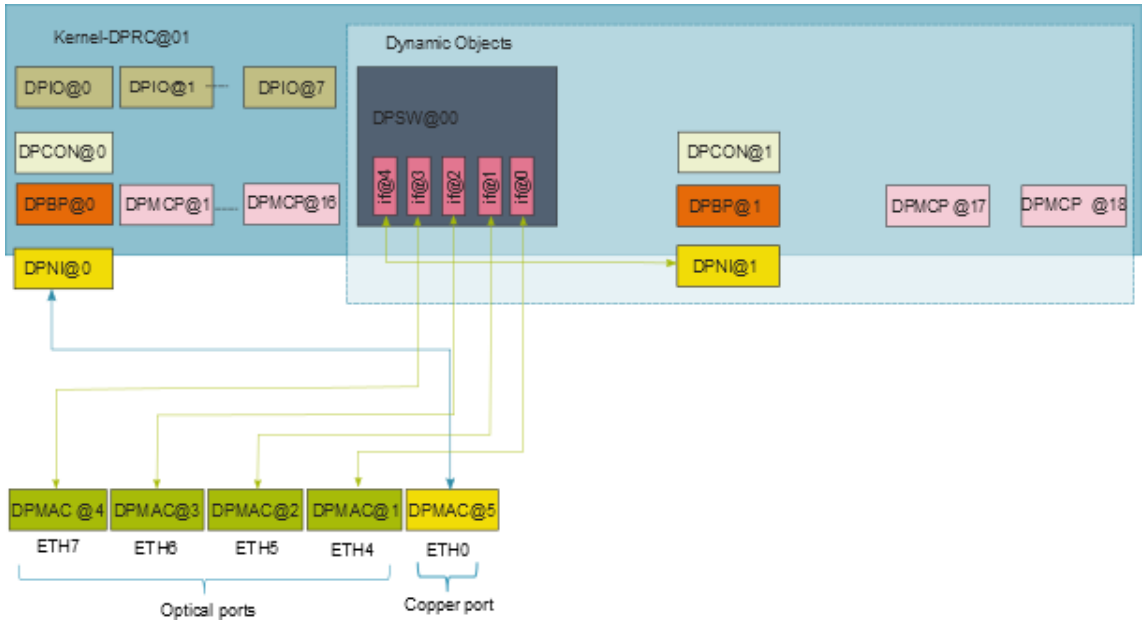

NOTE

When a new object is created via restool, an object with the id of the first available resource will be returned.

NOTE

Depending on the board type, DPMAC availability varies. For more details please refer to **Limitations and Known Issues**.

8.3.2.4.2.1.1 Creating a DPSW

The switch object is created by this command:

```
$ restool dpsw create --num-ifs=5 --max-vlans=16 --max-fdbs=1 --options="DPSW_OPT_CTRL_IF_DIS"
```

The command specifies some configuration options, including the number of ports in the switch, the maximum number of VLANs that can be used on the switch – including VLAN1 used implicitly, plus the number of FDBs.

For all the configuration options and parameters see the help output:

```
$ restool dpsw create -h
```

Currently VLAN private FDBs are not supported; a single shared FDB is used. Also control traffic is not supported, so option DPSW_OPT_CTRL_IF_DIS has to be specified.

8.3.2.4.2.1.2 Connecting the switch

Linking the switch ports to other objects is done with:

```
restool dprc connect "$RC" --endpoint1="$SW".0 --endpoint2=dpmac.1
restool dprc connect "$RC" --endpoint1="$SW".1 --endpoint2=dpmac.2
restool dprc connect "$RC" --endpoint1="$SW".2 --endpoint2=dpmac.3
restool dprc connect "$RC" --endpoint1="$SW".3 --endpoint2=dpmac.4
restool dprc connect "$RC" --endpoint1="$SW".4 --endpoint2="$NI"
```

In the context of the configuration script, these commands create the following layout:

- sw0p0 (dpsw@1/if@0) <-> dpmac@1 (SFP+ port, labeled ETH4 on RDB front panel)
- sw0p1 (dpsw@1/if@1) <-> dpmac@2 (SFP+ port, labeled ETH5 on RDB front panel)
- sw0p2 (dpsw@1/if@2) <-> dpmac@3 (SFP+ port, labeled ETH6 on RDB front panel)
- sw0p3 (dpsw@1/if@3) <-> dpmac@4 (SFP+ port, labeled ETH7 on RDB front panel)
- sw0p4 (dpsw@1/if@4) <-> dpni@1

For SerDes **0x2A_0x41**, DPMACs 1-4 are mapped to the optical PHYs while DPMACs 5-8 are mapped to the copper PHYs. User can choose to connect any of the optical or copper ports and any NIs to the switch.

8.3.2.4.2.1.3 Enabling the switch

This command plugs the switch object on the bus, in the Linux resource container. The switch driver probes the switch and presents the associated network interfaces in Linux.

```
$ restool dprc assign "$RC" --object="$SW" --plugged=1
```

After enabling the switch it can be configured from Linux using the commands specified in Commands supported.

8.3.2.4.2.1.4 Restool wrapper scripts

For user convenience the **ls-addsw** script is provided to assist creation of a new DPSW object.

To replicate the setup described in sectionConnecting the switch the following commands are required:

```
$ ls-addni -n
$ ls-addsw -i=5 dpmac.3 dpmac.4 dpmac.5 dpmac.6 dpni.1
```

The first command creates a new DPNI object and the second the DPSW object. DPMACs are already defined in the DPL file. To display the DPNIs and DPMACs available one can use *ls-listni* or *ls-listmac* commands. The DPIO, DPBP, DPCON and DPMCP objects that are dependencies for the new objects are created by the script, without user intervention.

For all the script options and parameters see the help:

```
$ ls-addsw -h
```

The endpoints are connected in the specified order to switch ports. If there are less endpoints than the number of interfaces, the user can later add the rest using *ls-addni* or *restool* commands.

8.3.2.4.2.2 Using the data path layout file (DPL)

A switch object may be defined statically in the DPL, allowing it to be created automatically during platform initialization. Below is an example of switch definition in the DPL:

```
dpsw@0 {
      compatible = "fsl,dpsw";
      options = "DPSW_OPT_CTRL_IF_DIS";
      max_vlans = <0x10>;
      max_fdbs = <0x1>;
      num_fdb_entries = <0x400>;
      fdb_aging_time = <0x12c>;
      num_ifs = <0x5>;
      max_fdb_mc_groups = <32>;
};
```

This example is for a 5-port switch that includes support for up to 16 VLAN IDs, including VLAN 1 (that is internally used by the switch), up to 1024 FDB entries, and up to 32 multicast groups.

Links are defined in the DPL 'connections' section as follows:

```
connections {
       connection@1 {
            endpoint1 = "dpsw@0/if@0";
            endpoint2 = "dpmac@1";
        };
        connection@2 {
            endpoint1 = "dpsw@0/if@1";
            endpoint2 = "dpmac@2";
        };
        connection@3 {
            endpoint1 = "dpsw@0/if@2";
            endpoint2 = "dpmac@3";
        };
        connection@4 {
            endpoint1 = "dpsw@0/if@3";
            endpoint2 = "dpmac@4";
        };
        connection@5 {
            endpoint1 = "dpsw@0/if@4";
            endpoint2 = "dpni@1";
```

```
        };
};
```

The generated layout is the one described in Connecting the switch.

8.3.2.4.3 Setting up the driver

To compile the driver, you enable the **FSL_DPAA2_ETHSW** option in the kernel's config. It can be found in *menuconfig* under the following items:

```
| -> Device Drivers
|   -> Staging drivers
|     -> Freescale DPAA2 devices
|       -> Freescale DPAA2 Ethernet Switch
```

The driver is enabled in the default kernel configuration file and uses the *switchdev* kernel support, thus it depends on the *NET_SWITCHDEV* option. To have access to the kernel interfaces for configuring bridges, *BRIDGE* kernel option has to be enabled.

After deploying the driver and instantiating a DPSW, the system will present a network interface for each switch port. These are used for control, not for I/O. Any I/O through the switch must be performed using the interfaces linked to the switch.

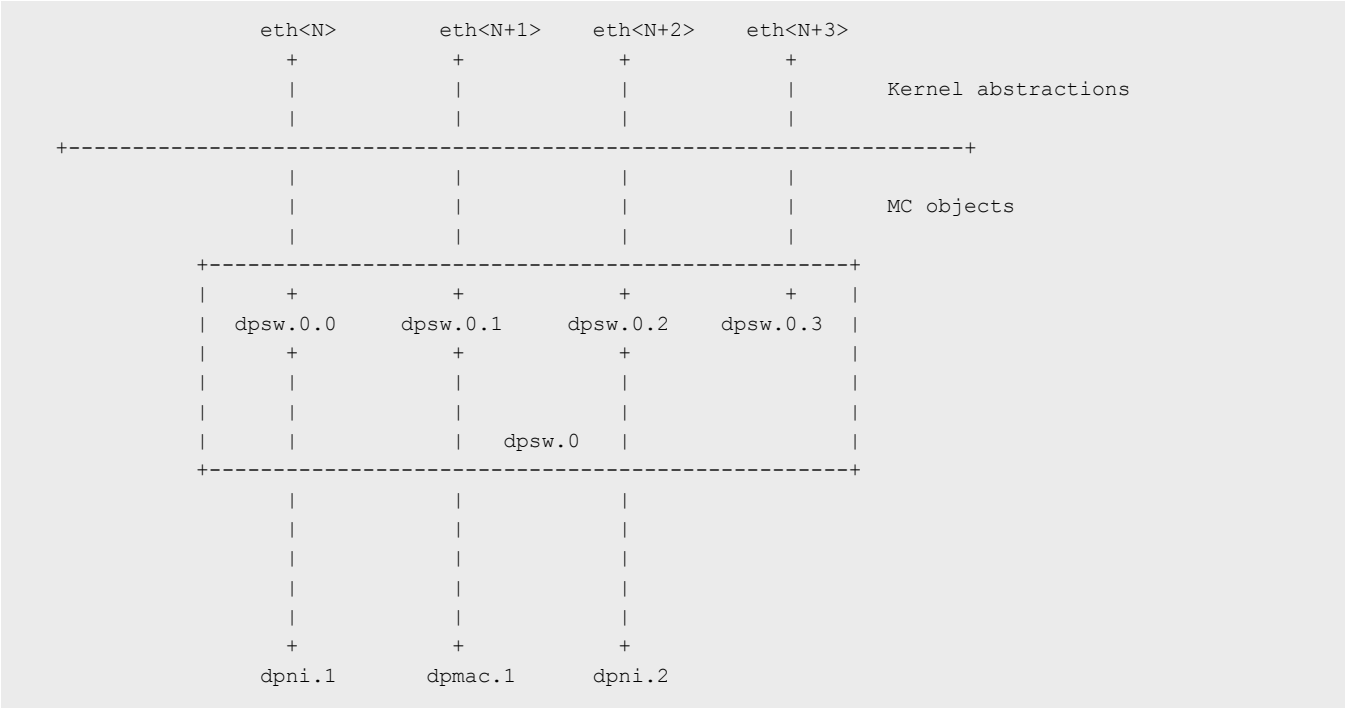

To be able to use the switch, etwork interfaces have to be configured in a bridge using standard Linux tools like those in iproute2 suite.

Configuring the switch in Linux

1. Create a bridge interface

After the DPAA2 Ethernet Switch is created, network interfaces for each switch port are available. They need to be added to a bridge interface:

```
ip link add name <brX> type bridge
ip link set <brX> up
```

2. Configuring MAC addresses

To be able to configure the ports, a unique MAC address has to be configured on each interface:

```
ip link set eth<N> down
ip link set eth<N> address xx:xx:xx:xx:xx:xx
ip link set eth<N> up
```

3. Adding switch ports to bridge interface

Switch ports that are not added to the bridge interface cannot be used to forward traffic.

```
ip link set eth<N> master <brX>
```

8.3.2.4.4 Commands supported

The switch management commands supported are:

- ifup/ifdown (using ifconfig or similar)
- setting large frame size limit (using ifconfig or similar)
- retrieving statistics (using ifconfig or similar)
- configuring FDB (using bridge fdb)
- configuring multicast groups (using bridge fdb)
- configuring VLANs (using bridge vlan)
- configuring learning (using bridge link set)

8.3.2.4.4.1 Interface control

Any of the switch ports can be enabled/disabled using any of the following commands:

```
$ ifconfig eth<N> { up | down }
$ ip link set eth<N> { up | down }
```

Disabling the bridge device will also disable the assigned switch ports.

8.3.2.4.4.2 Maximum frame size configuration

The DPAA2 hardware supports large frames. Ethernet switch driver correlates between the Layer-2 maximum frame length (MFL) and Layer-3 MTUs. The maximum MTU that a Linux user can request on a DPAA2 Ethernet switch interface is 10218 bytes and has to be set on each port individually.

```
$ ifconfig eth<N> mtu <NN>
$ ip link set { eth<N> | dev eth<N> } mtu <NN>
```

Notes:

- Frames larger than the configured MTU will be dropped, so connected Ethernet devices need to have the same setting.
- All Ethernet devices on the same LAN must have the same MTU to avoid traffic loss.

8.3.2.4.4.3 Learning control

The switch is set by default to enable learning, and the learning can be controlled using this command:

```
$ bridge link set dev eth<N> learning { on | off }
```

NOTE

The command is executed on a switch port, although it does affect the learning function at switch level. Turning off learning does not remove the learned entries.

To establish a static topology, learning should be disabled before injecting any traffic.

8.3.2.4.4.4 FDB static entries

The default switch configuration does not include any static entries; these can be added using the *bridge fdb add* command, as shown below:

```
$ bridge fdb add xx:xx:xx:xx:xx:xx dev eth<N> master
```

8.3.2.4.4.5 Multicast entries

Multicast groups can be configured via bridge `fdb add|append|delete` commands:

```
$ bridge fdb add 01:00:05:00:00:13 dev eth6
$ bridge fdb append 01:00:05:00:00:13 dev eth7
$ bridge fdb append 01:00:05:00:00:13 dev eth8
$ bridge fdb append 01:00:05:00:00:13 dev eth9

$ bridge fdb del 01:00:05:00:00:13 dev eth9
```

The commands add all external ports, one by one, to the `01:00:05:00:00:13` multicast group. The last command removes the last port from the group.

8.3.2.4.4.6 VLAN configuration

All ports added to a bridge are added to the default VLAN. All untagged traffic received on switch ports is classified to VLAN 1, and all frames classified in VLAN 1 are sent out untagged on all ports. Additional VLANs can be added on the switch using these commands:

```
$ bridge vlan add vid 2 dev eth0
$ bridge vlan add vid 2 dev eth1
$ bridge vlan add vid 2 dev eth2
$ bridge vlan add vid 2 dev eth3
$ bridge vlan add vid 2 dev eth4
```

This example includes all five ports in VLAN 2. After running these commands the switch should allow frames tagged with vid 2 to pass through the switch; not all ports have to be included in the VLAN.

To remove a port from a given VLAN use the following command:

```
$ bridge vlan del vid 2 dev eth0
```

8.3.2.4.4.7 Port statistics

Hardware counters for switch ports are available through `ethtool`:

```
$ ethtool -S eth<N>
NIC statistics:
     rx frames: 0
     rx bytes: 0
     rx filtered frames: 0
     rx discarded frames: 0
```

```
      rx b-cast frames: 0
      rx b-cast bytes: 0
      rx m-cast frames: 0
      rx m-cast bytes: 0
      tx frames: 0
      tx bytes: 0
      tx discarded frames: 0
```

No software statistics are available for switch ports.

8.3.2.5 Setting Up Edge Virtual Bridge Capability

8.3.2.5.1 EVB overview

An edge virtual bridge allows the sharing of a physical connection between multiple entities (virtual hosts). It can act as a VEB or as a VEPA.

In VEB mode, traffic is forwarded between connected virtual hosts or between virtual hosts and uplink.

In VEPA mode, all traffic from virtual hosts is forwarded to uplink, bridging functions (including 'hairpin' forwarding) being performed by an external device.

Features supported:

- VEB/VEPA mode
- Traffic steering according to MAC, VLAN (in VEPA mode only) or MAC+VLAN
- Static FDB entries management (add/delete/show)
- Static multicast FDB entries management (add/delete/show)
- Flooding of broadcast and multicast traffic

8.3.2.5.2 EVB object creation

EVB objects can be created as follows:

- Dynamically using the restool as described in Using restool for dynamic object creation
- Statically in a DPL file as described in Using the data path layout file (DPL)

8.3.2.5.2.1 Using restool for dynamic object creation

A DPDMUX can be instantiated at run-time, using restool.

The following section describes the main commands to create an EVB and its dependencies starting from the **dpl-eth.0x2A_0x41.dtb** DPL file.

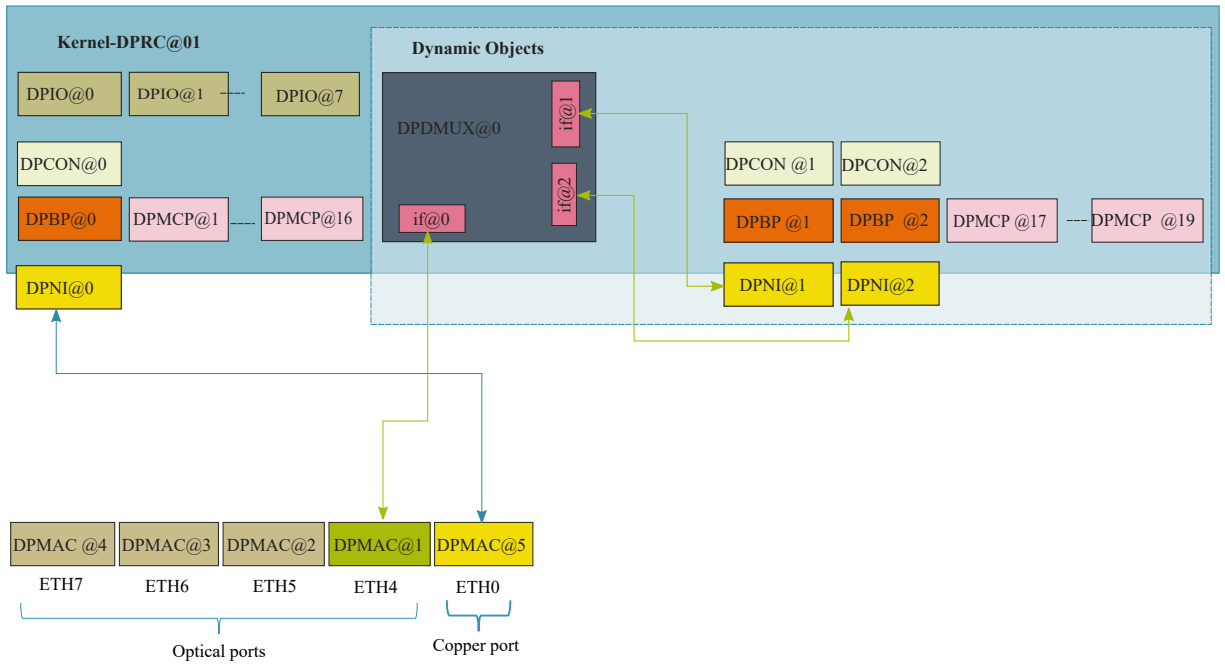

Figure 147. Dynamic DPDMUX demo

NOTE

When a new object is created using restool, an object with the ID of the first available resource is returned.

NOTE

Depending on the board type, DPMAC availability varies. For more details please refer to **Limitations and Known Issues**.

8.3.2.5.2.1.1 Creating a DPDMUX

The EVB is created by this command:

```
$ restool dpdmux create --num-ifs=2 --control-if=0                      \
          --options=DPDMUX_OPT_BRIDGE_EN --method=DPDMUX_METHOD_MAC     \
          --max-dmat-entries=8 --max-mc-groups=8 --manip=DPDMUX_MANIP_NONE
```

The command must specify the number of downlinks and the ID of the uplink (ranges for 0 to [number of downlinks -1]). The other parameters are optional. For more information about the available options see the output of the command:

```
$ restool dpdmux create -h
```

8.3.2.5.2.1.2 Connecting the EVB

Linking the EVB ports to other objects is done with:

```
$ restool dprc connect "$RC" --endpoint1="$MUX".0 --endpoint2="$MAC"
$ restool dprc connect "$RC" --endpoint1="$MUX".1 --endpoint2="$NI1"
$ restool dprc connect "$RC" --endpoint1="$MUX".2 --endpoint2="$NI2"
```

$RC represents the container for the objects, $MUX is the object identified for the EVB. The uplink is the endpoint with the id specified by *control-if* parameter at creation time.

8.3.2.5.2.1.3 Enabling the EVB

This command plugs the EVB object on the bus, in the Linux resource container. The EVB driver probes the switch and presents the associated network interfaces in Linux.

```
$ restool dprc assign "$RC" --object="$MUX" --plugged=1
```

8.3.2.5.2.1.4 Restool wrapper scripts

For user convenience the **ls-addmux** script is provided to assist creation of a new DPDMUX object.

Example to replicate setup in section Connecting the EVB :

```
# ls-addmux -d=2 -u=0 dpmac.1
[ 4298.023745] dpaa2_evb dpdmux.0: probed evb device with 2 ports
Created EVB: evb0 (object: dpdmux.0, uplink: dpmac.1)
```

This command creates EVB evb0 (and the corresponding dpdmux.0 object) with two downlinks and the uplink connected to dpmac.1.

After creating the DPDMUX, its downlinks can be connected to DPNIs using **ls-addni** script:

```
# ls-addni dpdmux.0.1
Will allocate 8 DPCON objects for this hash size
[ 5118.645253] fsl_dpaa2_eth dpni.1: Probed interface ni1
Created interface: ni1 (object:dpni.1, endpoint: dpdmux.0.1)
# ls-addni dpdmux.0.2
Will allocate 8 DPCON objects for this hash size
[ 5122.169030] fsl_dpaa2_eth dpni.2: Probed interface ni2
Created interface: ni2 (object:dpni.2, endpoint: dpdmux.0.2)
```

8.3.2.5.2.2 Using the data path layout file (DPL)

A DPDMUX instance can statically be defined in the DPL file:

```
dpdmux@0 {
       compatible = "fsl,dpdmux";
       options = "DPDMUX_OPT_BRIDGE_EN";
       method = "DPDMUX_METHOD_MAC";
       manip = "DPDMUX_MANIP_NONE";
       control_if = <0>;
       num_ifs = <2>;
       max_dmat_entries = <8>;
       max_mc_groups = <8>;
};
```

Links are defined in the DPL 'connections' section:

```
connection@1{
        endpoint1 = "dpdmux@0/if@0";
        endpoint2 = "dpmac@1";
};
connection@2{
        endpoint1 = "dpni@1";
        endpoint2 = "dpdmux@0/if@1";
};
connection@3{
        endpoint1 = "dpni@2";
        endpoint2 = "dpdmux@0/if@2";
};
```

Based on the above configuration the DPDMUX ports are linked to:

- evb0 (dpdmux@1/if@0) <-> dpmac@1
- evb0p0 (dpdmux@1/if@1) <-> dpni@1
- evb0p1 (dpdmux@1/if@2) <-> dpni@2

NOTE

DPDMUX ports connected to a DPMAC must be configured before the others (e.g. connected to DPNIs).

8.3.2.5.3 Setting up the EVB driver

Driver compilation is enabled by default and is controlled by the FSL_DPAA2_EVB option in the kernel's config. This can be found in *menuconfig* under the following items:

```
| -> Device Drivers
|     -> Staging drivers
|         -> Freescale Management Complex (MC) bus driver
|             -> Freescale DPAA2 devices
|                 -> DPAA2 Edge Virtual Bridge
```

The kernel log will display a message when an EVB is probed as follows:

```
dpaa2_evb dpdmux.0: probed evb device with 2 ports
```

After deploying the driver and configuring an EVB (via DLP or restool), the system should present the following Linux interfaces after typing the 'ifconfig command':

```
evb0     Link encap:Ethernet HWaddr 00:00:00:00:00:00
         UP BROADCAST RUNNING MASTER MULTICAST MTU:1500 Metric:1
         RX packets:0 errors:0 dropped:0 overruns:0 frame:0
         TX packets:0 errors:0 dropped:0 overruns:0 carrier:0
         collisions:0 txqueuelen:1000
         RX bytes:0 (0.0 B) TX bytes:0 (0.0 B)

evb0p0   Link encap:Ethernet HWaddr 00:00:00:00:00:00
         UP BROADCAST RUNNING SLAVE MULTICAST MTU:1500 Metric:1
         RX packets:0 errors:0 dropped:0 overruns:0 frame:0
         TX packets:0 errors:0 dropped:0 overruns:0 carrier:0
         collisions:0 txqueuelen:1000
         RX bytes:0 (0.0 B) TX bytes:0 (0.0 B)

evb0p1   Link encap:Ethernet HWaddr 00:00:00:00:00:00
```

```
          UP BROADCAST RUNNING SLAVE MULTICAST MTU:1500 Metric:1
          RX packets:0 errors:0 dropped:0 overruns:0 frame:0
          TX packets:0 errors:0 dropped:0 overruns:0 carrier:0
          collisions:0 txqueuelen:1000
          RX bytes:0 (0.0 B) TX bytes:0 (0.0 B)
```

Interface ***evb0*** represents the uplink and is also the handler for the EVB. Each other EVB port has its own interface. They are used for management and cannot be used for I/O. Any I/O through the EVB must be performed using the connected interfaces.

An EVB only forwards traffic to links that are enabled (peer interface is up) and only if the filtering rules on the peer interface do not lead to the frame being discarded. One way to ensure that all traffic subject to forwarding rules is actually forwarded by the EVB is to set the peer interface in promiscuous mode, as follows:

```
$ ip link set ni0 up promisc on
```

8.3.2.5.4 EVB commands supported

EVB management can be performed using the following generic Linux networking tools:

- interface up/down (using ifconfig or similar)
- setting large frame size limit (using ifconfig or similar)
- configuring FDB (using bridge fdb)
- configuring VLANs (using bridge vlan)
- configuring multicast groups (using bridge fdb)
- port statistics retrieval (ethtool or similar)

8.3.2.5.4.1 EVB interface control

Any of the EVB ports, or the EVB as a whole, can be enabled/disabled using any of the following commands:

```
$ ifconfig { evb0pX | evb0 } { up | down }
$ ip link set { evb0pX | evb0 } { up | down }
```

8.3.2.5.4.2 Maximum frame size configuration

The DPAA2 hardware supports large frames. EVB driver correlates between the Layer-2 maximum frame length (MFL) and Layer-3 MTUs. The maximum MTU that a Linux user can request on a DPAA2 EVB interface is 10222 bytes. Setting a value on a downlink port or uplink will update the value for all EVB interfaces.

```
$ ifconfig { evbX | evbXpy } mtu <NN>
$ ip link set { evbX | evbXpY | dev evbXpY } mtu <NN>
```

Notes:

- Frames larger than the configured MTU will be dropped, so connected Ethernet devices need to have the same setting.
- All Ethernet devices on the same LAN must have the same MTU to avoid traffic loss.

8.3.2.5.4.3 EVB FDB entries

The EVB method DPDMUX_METHOD_MAC allows configuration of FDB entries via a bridge utility as follows:

```
$ bridge fdb add 02:00:c0:a8:50:01 dev evb0p0
$ bridge fdb show
02:00:c0:a8:50:01 self permanent
01:00:5e:00:00:01 self permanent
```

The EVB method DPDMUX_METHOD_C_VLAN_MAC also allows configuration of FDB entries via a bridge utility as follows:

```
$ bridge fdb add 02:00:c0:a8:50:02 vlan 10 dev evb0p0 vlan 10
$ bridge fdb show dev evb0p0
02:00:c0:a8:50:02 self permanent
01:00:5e:00:00:01 self permanent
```

8.3.2.5.4.4 EVB VLAN assignment

The EVB method DPDMUX_METHOD_C_VLAN allows port VLAN assignment via a bridge utility as follows:

```
$ bridge vlan add vid 10 dev evb0p2
$ bridge vlan show dev evb0p2
port vlan ids
evb0p2 10
$ bridge vlan del vid 10 dev evb0p2
```

NOTE

This method is allowed only for VEPA mode.

8.3.2.5.4.5 EVB port statistics

EVB port statistics are available through *ip* or similar tools as follows:

```
$ ip -s link
[...]
9: evb0: <BROADCAST,MULTICAST,MASTER,UP,LOWER_UP> mtu 1500 qdisc pfifo_fast state UNKNOWN mode
DEFAULT group default qlen 1000
       link/ether 00:00:00:00:00:00 brd ff:ff:ff:ff:ff:ff
       RX: bytes packets errors dropped overrun mcast
       0         0       0      0       0       0
       TX: bytes packets errors dropped carrier collsns
       384       6       0      0       0       0
10: evb0p0: <BROADCAST,MULTICAST,SLAVE,UP,LOWER_UP> mtu 1500 qdisc pfifo_fast master evb0 state
UNKNOWN mode DEFAULT group default qlen 1000
       link/ether 00:00:00:00:00:00 brd ff:ff:ff:ff:ff:ff
       RX: bytes packets errors dropped overrun mcast
       252       6       0      0       0       0
       TX: bytes packets errors dropped carrier collsns
       0         0       0      0       0       0
[...]
```

8.3.2.5.5 Forwarding methods overview

A DPAA2 DPDMUX instance can forward traffic using information from various fields in the frame headers:

- Forwarding by destination MAC address
- Forwarding by VLAN tag
- Forwarding by VLAN tag and destination MAC adress

8.3.2.5.5.1 Forwarding by destination MAC address

This method forwards frames according to the destination MAC address and the static rules added into the EVB forwarding database.

It is configured specifying *--method="DPDMUX_METHOD_MAC"* when the DPDMUX is created. It is the default value for the *ls-addmux* script.

Entries are configured in the FDB using *bridge fdb* command. See EVB FDB entries section for more information.

Configuration example:

```
# Create a MUX with 2 downlinks and uplink connected to dpmac.1;
# forwarding method is by default DPDMUX_METHOD_MAC
$ ls-addmux -b -d=2 -u=0 dpmac.1

# Create a ni (dpni.1) and links it to evb0p0
$ ls-addni dpdmux.0.1

# Create a ni (dpni.2) and links it to evb0p1
$ ls-addni dpdmux.0.2

# Check MUX configuration
# $ restool dpdmux info dpdmux.0

# Configure ni1
$ ip netns add ns1
$ ip link set ni1 netns ns1
$ ip netns exec ns1 ifconfig ni1 192.168.10.10/24 up
$ ip netns exec ns1 ip link set ni1 promisc on

# Configure ni2
$ ip netns add ns2
$ ip link set ni2 netns ns2
$ ip netns exec ns2 ifconfig ni2 192.168.10.12/24 up
$ ip netns exec ns2 ip link set ni2 promisc on

# Connectivity checks [downlink - uplink ]
$ ip netns exec ns1 ping 192.168.10.13 -c 1
[..]
--- 192.168.10.13 ping statistics ---
1 packets transmitted, 1 received, 0% packet loss, time 0ms

# Check EVB port statistics
$ ip -s link
[...]
4: evb0: <BROADCAST,MULTICAST,MASTER,UP,LOWER_UP> mtu 1500 qdisc pfifo_fast state UNKNOWN mode
DEFAULT group default qlen 1000
    link/ether 00:00:00:00:00:00 brd ff:ff:ff:ff:ff:ff
    RX: bytes  packets  errors  dropped overrun mcast
    436        6        0       0       0       0
    TX: bytes  packets  errors  dropped carrier collsns
    460        6        0       0       0       0
5: evb0p0: <BROADCAST,MULTICAST,SLAVE,UP,LOWER_UP> mtu 1500 qdisc pfifo_fast master evb0 state UP
mode DEFAULT group default qlen 1000
    link/ether 00:00:00:00:00:00 brd ff:ff:ff:ff:ff:ff
    RX: bytes  packets  errors  dropped overrun mcast
    364        6        0       0       0       0
    TX: bytes  packets  errors  dropped carrier collsns
    376        5        0       0       0       0
6: evb0p1: <NO-CARRIER,BROADCAST,MULTICAST,SLAVE,UP> mtu 1500 qdisc pfifo_fast master evb0 state DOWN
mode DEFAULT group default qlen 1000
    link/ether 00:00:00:00:00:00 brd ff:ff:ff:ff:ff:ff
    RX: bytes  packets  errors  dropped overrun mcast
    0          0        0       0       0       0
```

```
    TX: bytes  packets  errors  dropped carrier collsns
    0          0        0       0       0       0
```

8.3.2.5.5.2 Forwarding by VLAN tag

This method forwards frames according to the VLAN tag of the frame, as set into the customer tag of the double-tagged frames.

It is configured specifying *--method="DPDMUX_METHOD_C_VLAN"* when EVB is in VEPA mode (*--options="DPDMUX_OPT_BRIDGE_EN"* is not set).

EVB port VLAN assignment is done with "*bridge vlan* command. See EVB VLAN assignment section for more information.

Configuration example:

```
# Create a MUX with DPDMUX_METHOD_C_VLAN forwarding method,
# configured as a VEPA and with 2 downlinks and uplink connected
# to dpmac.1
$ ls-addmux -v -m=DPDMUX_METHOD_C_VLAN -d=2 dpmac.1

# Create a ni (dpni.1) and link it to evb0p0
$ ls-addni dpdmux.0.1

# Create a ni (dpni.2) and link it to evb0p1
$ ls-addni dpdmux.0.2

# Configure ni1
$ ip netns add ns1
$ ip link set ni1 netns ns1
$ ip netns exec ns1 ip link add link ni1 name ni1.6 type vlan id 6
$ ip netns exec ns1 ifconfig ni1.6 192.168.6.10
$ ip netns exec ns1 ip link set ni1 up
$ ip netns exec ns1 ip link set ni1 promisc on

# Configure ni2
$ ip netns add ns2
$ ip link set ni2 netns ns2
$ ip netns exec ns2 ip link add link ni2 name ni2.7 type vlan id 7
$ ip netns exec ns2 ifconfig ni2.7 192.168.7.12
$ ip netns exec ns2 ip link set ni2 up
$ ip netns exec ns2 ip link set ni2 promisc on

# For the downlinks interfaces also add the VLAN ids
$ bridge vlan add vid 6 dev evb0p0
$ bridge vlan add vid 7 dev evb0p1

# Connectivity checkings [example for downlink - uplink ]
$ ip netns exec ns1 ping -I ni1.6 192.168.6.13 -c 1

# Check VLAN assignment
$ bridge vlan show
```

8.3.2.5.5.3 Forwarding by VLAN tag and destination MAC address

This method forwards frames according to the VLAN tag and the destination MAC address of the frame .

It is configured specifying *--method="DPDMUX_METHOD_C_VLAN_MAC"* when the DPDMUX is created.

Entries are configured in the FDB using *bridge fdb* command. See EVB FDB entries section for more information.

Configuration example:

```
# Create a MUX with DPDMUX_METHOD_C_VLAN_MAC forwarding method,
# configured as a VEB and with 2 downlinks and uplink connected
# to dpmac.1
$ ls-addmux -m=DPDMUX_METHOD_C_VLAN_MAC -d=2 dpmac.1

# Create a ni (dpni.1) and link it to evb0p0
$ ls-addni dpdmux.0.1
```

```
# Create a ni (dpni.2) and link it to evb0p1
$ ls-addni dpdmux.0.2

# Configure ni1
$ ip netns add ns1
$ ip link set ni1 netns ns1
$ ip netns exec ns1 ip link add link ni1 name ni1.6 type vlan id 6
$ ip netns exec ns1 ifconfig ni1.6 192.168.6.10
$ ip netns exec ns1 ip link set ni1 up
$ ip netns exec ns1 ip link set ni1 promisc on

# Configure ni2
$ ip netns add ns2
$ ip link set ni2 netns ns2
$ ip netns exec ns2 ip link add link ni2 name ni2.7 type vlan id 7
$ ip netns exec ns2 ifconfig ni2.7 192.168.7.12
$ ip netns exec ns2 ip link set ni2 up
$ ip netns exec ns2 ip link set ni2 promisc on

# For the downlinks interfaces, you would also need to add
# the downlinks MACs to fdb table
$ bridge fdb add 4a:64:0a:af:14:a2 dev evb0p0 vlan 6
$ bridge fdb add 62:9c:86:0f:f7:cf dev evb0p1 vlan 7

# Connectivity checkings [example for downlink - uplink ]
$ ip netns exec ns1 ping -I ni1.6 192.168.6.13 -c 1

# Check EVB FDB entries
$ bridge fdb show
```

8.3.2.6 Security Engine (SEC)

This section describes the software for the SEC hardware block that is part of the DPAA2 family of SoCs.

Introduction

Current chapter is focused on DPAA2-specific SEC details - Data Path SEC Interface (DPSECI) backend and frontend drivers.

- JRI - the common Job Ring Interface (on which QI is currently dependent)
- crypto algorithms supported by each backend (RI, JRI, QI, DPSECI)
- kernel configuration - how to build backend and frontend drivers
- how to make sure the algorithms registered successfully
- how to check that crypto requests are being offloaded on SEC engine

On SoCs with DPAA v2.x, DPSECI backend can be used to submit crypto API service requests from the frontend drivers. The corresponding frontend compatible with DPSECI backend is *caamalg_qi2*, which supports symmetric encryption and AEAD algorithms-based crypto API service requests.

The Linux driver automatically sets the enable bit for the SEC hardware's Queue Interface (QI), depending on QI feature availability in the hardware. This enables the hardware to also operate as a DPAA component for use by e.g., USDPAA apps. This behaviour does not conflict with normal in-kernel job ring operation, other than the potential performance-observable effects of internal SEC hardware resource contention, and vice-versa.

Module loading

The DPSECI backend driver (*dpseci*) is compiled built-in, while the DPSECI frontend driver (*dpaa2_caam*) is compiled, by default, as module (though it can also be compiled built-in). In this case, it has to be probed before dynamically creating `dpseci` objects with `restool`:

```
$ modprobe dpaa2_caam
```

Without any parameter, the `dpseci` object being created has 2 pairs of (rx,tx) queues.

```
$ restool dpseci create
$ restool dprc assign dprc.1 --object=dpseci.0 --plugged=1
```

To create 8 (maximum) number of queues:

```
$ restool dpseci create --num-queues=8 --priorities=1,2,3,4,5,6,7,8
$ restool dprc assign dprc.1 --object=dpseci.0 --plugged=1
```

More options can be displayed by using:

```
$ restool dpseci create --help
```

The list of algorithms registered by the *dpaa2_caam* driver is available in /proc filesystem:

```
$ grep caam-qi2 /proc/crypto
```

Enabling congestion management

Congestion management can be enabled when working with a MC that has a DPSECI object version greater or equal to 5.1. The first MC firmware version that supports the congestion management feature is 10.2. Enabling congestion management is done when creating the DPSECI object:

```
$ restool dpseci create --num-queues=8 --priorities=1,2,3,4,5,6,7,8 --options="DPSECI_OPT_HAS_CG"
$ restool dprc assign dprc.1 --object=dpseci.0 --plugged=1
```

Source files

The driver source files are maintained in the Linux kernel source tree: `drivers/crypto/caam`.

How to test the driver

To test the driver, in the kernel configuration menu, under "`Cryptographic API -> Cryptographic algorithm manager`", ensure that run-time self-tests are not disabled, i.e. the "`Disable run-time self tests`" entry is not set (CONFIG_CRYPTO_MANAGER_DISABLE_TESTS=n). This will run standard test vectors against the driver after the driver registers its supported algorithms with the kernel crypto API. To verify if the 'selftest' fields have 'passed', the /proc/crypto entries should be checked. An entry such as this:

```
name         : cbc(aes)
driver       : cbc-aes-caam-qi2
module       : kernel
priority     : 2000
refcnt       : 1
selftest     : passed
internal     : no
type         : givcipher
async        : yes
blocksize    : 16
min keysize  : 16
max keysize  : 32
```

means the driver has successfully registered support for the algorithm with the kernel crypto API. Note that although a test vector may not exist for a particular algorithm supported by the driver, the kernel will emit messages saying which algorithms weren't tested, and mark them as *passed* anyway. The driver's capabilities can also be tested with tcrypt testing framework available in linux kernel by selecting "`Cryptographic API -> Testing module`" (also `Disable run-time self tests` should

be unchecked). A kernel module will be generated: *crypto/tcrypt.ko*. This has to be copied on the target. Then on target, after a dpseci object is registered:

```
$ insmod tcrypt.ko mode=10
```

Other ways to test with tcrypt:

- functional testing:
  - mode=3, 4, 35, 150, 152, 155, 181-191;
  - alg="algorithm_name"
- speed (*sec* - seconds parameter is optional):
  - mode=500 [sec=1] - xxx(aes) acipher_speed
  - mode=501 [sec=1] - xxx(3des) acipher_speed
  - mode=502 [sec=1] - xxx(des) acipher_speed etc.

There is no need to rmmod, tcrypt does not stay "resident", it exits after running the tests. That's why you'll see:

```
insmod: ERROR: could not insert module tcrypt.ko: Resource temporarily
```

For algorithms not supported, errors like below will be shown:

```
[ 2650.067737] failed to load transform for rmd128: -2
[ 2650.076480] failed to load transform for rmd160: -2
[ 2650.085099] failed to load transform for rmd256: -2
[ 2650.093739] failed to load transform for rmd320: -2
```

These are expected. Algorithm names registered by dpaa2_caam frontend driver are ending in `"-caam-qi2"`.

To verify the operation and correctness of the driver, other than noting the performance advantages due to the crypto offload, one can also ensure the h/w is doing the crypto by looking for driver messages in dmesg. The driver emits console messages at initialization time:

```
$ dmesg | grep dpaa2_caam
[ 1172.598591] dpaa2_caam dpseci.0: Opened dpseci object successfully
[ 1172.619979] dpaa2_caam dpseci.0: prio 0: rx queue 135, tx queue 119
[ 1172.626633] dpaa2_caam dpseci.0: prio 1: rx queue 136, tx queue 128
[ 1172.633278] dpaa2_caam dpseci.0: prio 2: rx queue 137, tx queue 129
[ 1172.639915] dpaa2_caam dpseci.0: prio 3: rx queue 138, tx queue 130
[ 1172.646555] dpaa2_caam dpseci.0: prio 4: rx queue 139, tx queue 131
[ 1172.653195] dpaa2_caam dpseci.0: prio 5: rx queue 140, tx queue 132
[ 1172.659831] dpaa2_caam dpseci.0: prio 6: rx queue 141, tx queue 133
[ 1172.666470] dpaa2_caam dpseci.0: prio 7: rx queue 142, tx queue 134
[ 1172.694319] dpaa2_caam dpseci.0: DPSECI version 3.0
[ 1172.700617] dpaa2_caam dpseci.0: algorithms registered in /proc/crypto
```

Given a time period when crypto requests are being made, the SEC h/w will fire completion notification interrupts:

```
$ cat /proc/interrupts | grep DPIO
```

If the number of interrupts fired increment, then the h/w is being used to do the crypto. If the numbers do not increment, then check if the algorithm being exercised is supported by the driver.

Running OpenSSL

Some of the OpenSSL cryptographic operations (for e.g. TLS 1.0 record layer encryption, some non-protocol-specific crypto algorithms) can be offloaded to Linux kernel (and then further to SEC crypto engine) via cryptodev module.

Please refer to Hardware Offloading with OpenSSL chapter for more details.

>Running IPsec

Setup Description

IPsec can be configured and used for NXP boards taking advantage of the cryptographic acceleration provided by the CAAM engine. Below is the description of the setup used to test IPsec traffic between two LS2088ARDB boards.

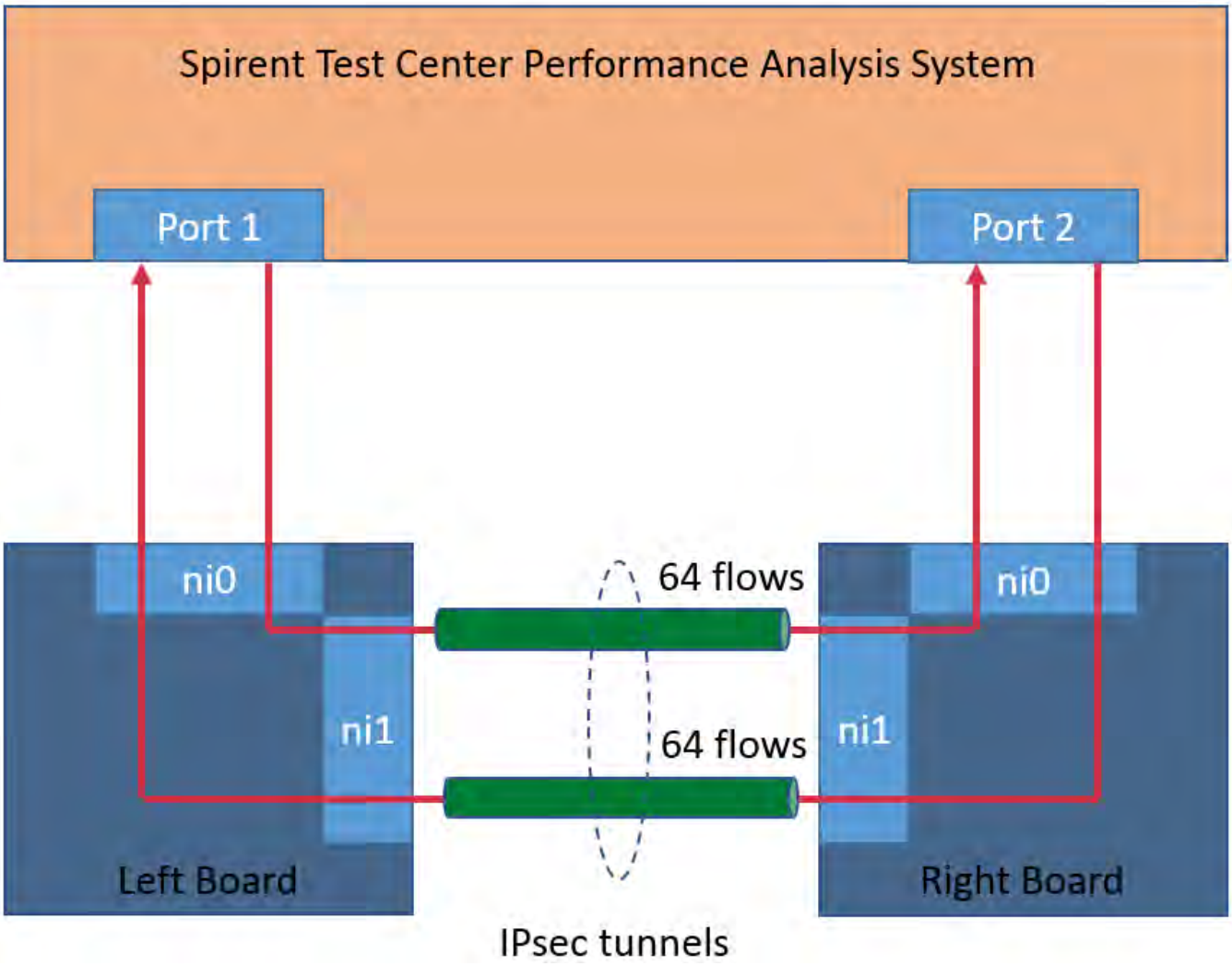

Traffic is generated from the Test Center on Port 1 as 64 flows. A flow is defined as a stream of packets that has a unique pair of values for IP source and IP destination. In our configuration the IP source ranges from 192.85.1.2 to 192.85.1.9 and the IP destination ranges from 192.86.1.2 to 192.86.1.9. The flows are received on the network interface ni0 of the left board, encapsulated and then sent over the ni1 network interface to the right board. Here the flows are decapsulated and routed to the network interface ni0 towards the Port 2 of the Test Center. A similar traffic, of 64 flows, is sent from Port 2 to Port 1 of the Test Center.

Board Bootup

Each LS2088ARDB board must be setup and configured properly. For more information about the booting process please see **NXP Soc Booting Principles**. For more details on the specifics of LS2088ARDB board boot, see LSDK Quick Start Guide for LS2088ARDB. This paragraph only provides some custom values and configuration files used for booting the LS2088ARDB board while testing IPSec. Although using the default configuration may work we strongly encourage using the values/configuration files chosen below.

- While in the U-Boot prompt make sure that the variable "mcmemsize" is set to 0x80000000. This will ensure that enough memory was allocated to MC. See DPAA2 specific Environment variables for more details.
- Use the files "dpl.dts" and "dpc.dts" provided under the title "Useful Resources". They provide a minimum viable MC configuration that will enable IPSec testing. Both are in the .dts file format. To use them to configure the MC you need to compile them using the "dtc" compiler to obtain the "dtb" files:

```
$ dtc -O dtb -I dts -o dpc.dtb dpc.dts
$ dtc -O dtb -I dts -o dpl.dtb dpl.dts
```

  For more information about MC resource files refer to chapter Key Release Files: RCW, DPC and DPL.

Linux setup

When the Linux console prompt is presented to the user (after inserting the username and password) the following actions must be taken:

- Create DPSECI object and assign them to a DPRC. Make sure to enable congestion management for the DPSECI object.

```
$ restool dpseci create --num-queues=8 --priorities=1,2,3,4,5,6,7,8 --options="DPSECI_OPT_HAS_CG"
$ restool dprc assign dprc.1 --object=dpseci.0 --plugged=1
```

- Create the IPSec tunnels for each board (left/right) using the script "iproute_128tunnels.sh". The script takes as parameter the board position (left/write) and uses it to configure each board accordingly. The script can be found in the "Useful Resources" section. You can create your own copy on the board by copying and pasting the content to a local script file, preserving the name.

  To create the tunnels on the left board run:

```
$ ./iproute_128tunnels.sh left
```

  To create the tunnels on the right board run:

```
$ ./iproute_128tunnels.sh right
```

- Disable flow control on board for both ni0 and ni1.

```
$ ethtool -A ni0 rx off
$ ethtool -A ni0 tx off
$ ethtool -A ni1 rx off
$ ethtool -A ni1 tx off
```

> **NOTE**
>
> The flow control must be either on or off but must match the settings of the Test Center. The situation where the Test Control and the boards don't match causes resource in the boards to be oversubscribed which in turn will lead to memory corruption.

Running the Test

After Spirent Test Center application is configured and the testing Ethernet interfaces are connected to the traffic generator, start to generate traffic to measure IPv4 SEC & Forward throughput.

Useful resources

- **The "iproute_128tunnels.sh" script**

```
#!/bin/bash
eth0=ni0
eth1=ni1

make_esp_tunnel() {
```

```
echo "add $1 $2 esp 0x$3 -m tunnel
    -E $4  0x7aeaca3f87d060a12f4a4487d5a5c3355920fae69a96c831
    -A hmac-sha1 0xe9c43acd5e8d779b6e09c87347852708ab49bdd3;" | setkey -c

echo "add $2 $1 esp 0x`expr $3 + 100` -m tunnel
    -E $4  0xf6ddb555acfd9d77b03ea3843f2653255afe8eb5573965df
    -A hmac-sha1 0xea6856479330dc9c17b8f6c37e2a895363d83f21;" | setkey -c

}

make_esp_policy() {

if [ $1 == left ]
then
    dir1=out
    dir2=in
    echo "spdadd $2 $3 any -P $dir1 ipsec
           esp/tunnel/$4-$5/require;" | setkey -c
    echo "spdadd $3 $2 any -P $dir2 ipsec
           esp/tunnel/$5-$4/require;" | setkey -c
else
    dir1=in
    dir2=out
    echo "spdadd $2 $3 any -P $dir1 ipsec
           esp/tunnel/$4-$5/require;" | setkey -c
    echo "spdadd $3 $2 any -P $dir2 ipsec
           esp/tunnel/$5-$4/require;" | setkey -c
fi

}

# Flush the SAD and SPD
setkey -F
setkey -FP

# set ip address
left_addr_ip=192.85.1.1
right_addr_ip=192.86.1.1
left_src_mac=00:10:94:00:00:01
right_src_mac=00:10:94:00:00:02
proto="aes-cbc"
base1=200
base2=200
echo 1 > /proc/sys/net/ipv4/ip_forward

case $1 in
        left)
                ifconfig $eth0 $left_addr_ip
                i=2
                for((j=2;j<10;j++))
                do
                    arp -s 192.85.1.$j $left_src_mac -i $eth0
                    for((k=2;k<10;k++))
                    do
                    if [ $base2 == 256 ]
                    then
                        base2=`expr $base2 - 256`
                        base1=`expr $base1 + 1`
                    fi
```

```
                    ip addr add 200.$base1.$base2.10/24 dev $eth1
                        make_esp_policy $1 192.85.1.$j 192.86.1.$k 200.$base1.$base2.10
200.$base1.$base2.20
                        make_esp_tunnel 200.$base1.$base2.10 200.$base1.$base2.20 `expr 200 + $i`
$proto
                        ((base2++))
                        ((i++))
                    done
                done
            ;;
        right)
                ifconfig $eth0 $right_addr_ip
                i=2
                for((j=2;j<10;j++))
                do
                    arp -s 192.86.1.$j $right_src_mac -i $eth0
                    for((k=2;k<10;k++))
                    do
                    if [ $base2 == 256 ]
                    then
                        base2=`expr $base2 - 256`
                        base1=`expr $base1 + 1`
                    fi
                    ip addr add 200.$base1.$base2.20/24 dev $eth1
                        make_esp_policy $1 192.85.1.$j 192.86.1.$k 200.$base1.$base2.10
200.$base1.$base2.20
                        make_esp_tunnel 200.$base1.$base2.10 200.$base1.$base2.20 `expr 200 + $i`
$proto
                        ((base2++))
                        ((i++))
                    done
                done
            ;;
esac

ifconfig $eth1 up
route add default dev $eth1
```

- **The "dpc.dts" configuration file**

```
/dts-v1/;

/ {

    mc_general {

        log {
            mode = "LOG_MODE_ON";
            level = "LOG_LEVEL_WARNING";
        };

        console {
            mode = "CONSOLE_MODE_ON";
            uart_id = <3>;
        };
    };

    resources {

        icid_pools {
```

```
            icid_pool@1 {
                num = <0x64>;
                base_icid = <0x0>;
            };
        };
    };

    controllers {

        qbman {
            total_bman_buffers = <0xe0000>;
            wq_ch_conversion = <32>;
        };
    };

    board_info {

        ports {
        };
    };
};
```

- **The "dpl.dts" configuration file**

```
/dts-v1/;
/ {
    dpl-version = <10>;
    /*****************************************************************
     * Containers
     *****************************************************************/
    containers {
    dprc@1 {
        parent = "none";
        options = "DPRC_CFG_OPT_SPAWN_ALLOWED" , "DPRC_CFG_OPT_ALLOC_ALLOWED",
"DPRC_CFG_OPT_IRQ_CFG_ALLOWED";
        objects {
        /* ------------- MACs --------------*/
        obj_set@dpmac {
            type = "dpmac";
            ids = <1 2 3 4 5 6 7 8>;
        };

        /* ------------ DPNIs --------------*/
        obj_set@dpni {
            type = "dpni";
            ids = <0 1>;
        };

        /* ------------ DPBPs --------------*/
        obj_set@dpbp {
            type = "dpbp";
            ids = <0 1>;
        };

        /* ------------ DPIOs --------------*/
        obj_set@dpio {
            type = "dpio";
            ids = <0 1 2 3 4 5 6 7>;
        };
```

```
        /* ------------ DPMCPs --------------*/
        obj_set@dpmcp {
            type = "dpmcp";
            ids = <1 2 3 4 5 6 7 8 9 10 11 12 13 14 15 16>;
        };

        /* ------------ DPCON --------------*/
        obj_set@dpcon {
            type = "dpcon";
            ids = <0 1 2 3 4 5 6 7 8 9 10 11 12 13 14 15>;
        };
        };
    };
    };

    /*****************************************************************
     * Objects
     *****************************************************************/
    objects {

    /* ------------ DPNI --------------*/
    dpni@0 {
        type = "DPNI_TYPE_NIC";
        options = "";
        num_queues = <8>;
        num_tcs = <1>;
        mac_filter_entries = <16>;
        vlan_filter_entries = <0>;
        fs_entries = <0>;
        qos_entries = <0>;
    };

    dpni@1 {
        type = "DPNI_TYPE_NIC";
        options = "";
        num_queues = <8>;
        num_tcs = <1>;
        mac_filter_entries = <16>;
        vlan_filter_entries = <0>;
        fs_entries = <0>;
        qos_entries = <0>;
    };

    /* ------------ DPBP --------------*/
    dpbp@0 {
    };

    dpbp@1 {
    };

    /* ------------ DPIO --------------*/
    dpio@0 {
        channel_mode = "DPIO_LOCAL_CHANNEL";
        num_priorities = <8>;
    };
    dpio@1 {
        channel_mode = "DPIO_LOCAL_CHANNEL";
        num_priorities = <8>;
    };
```

```
    dpio@2 {
        channel_mode = "DPIO_LOCAL_CHANNEL";
        num_priorities = <8>;
    };
    dpio@3 {
        channel_mode = "DPIO_LOCAL_CHANNEL";
        num_priorities = <8>;
    };
    dpio@4 {
        channel_mode = "DPIO_LOCAL_CHANNEL";
        num_priorities = <8>;
    };
    dpio@5 {
        channel_mode = "DPIO_LOCAL_CHANNEL";
        num_priorities = <8>;
    };
    dpio@6 {
        channel_mode = "DPIO_LOCAL_CHANNEL";
        num_priorities = <8>;
    };
    dpio@7 {
        channel_mode = "DPIO_LOCAL_CHANNEL";
        num_priorities = <8>;
    };

    /* ------------ DPMAC --------------*/

    dpmac@1 {
    };
    dpmac@2 {
    };
    dpmac@3 {
    };
    dpmac@4 {
    };
    dpmac@5 {
    };
    dpmac@6 {
    };
    dpmac@7 {
    };
    dpmac@8 {
    };

    /* ------------ DPMCP --------------*/
    dpmcp@1 {
    };
    dpmcp@2 {
    };
    dpmcp@3 {
    };
    dpmcp@4 {
    };
    dpmcp@5 {
    };
    dpmcp@6 {
    };
    dpmcp@7 {
    };
    dpmcp@8 {
```

```
    };
    dpmcp@9 {
    };
    dpmcp@10 {
    };
    dpmcp@11 {
    };
    dpmcp@12 {
    };
    dpmcp@13 {
    };
    dpmcp@14 {
    };
    dpmcp@15 {
    };
    dpmcp@16 {
    };

    /* ------------ DPCON --------------*/
    dpcon@0 {
        num_priorities=<2>;
    };

     dpcon@1 {
        num_priorities=<2>;
    };

    dpcon@2 {
        num_priorities=<2>;
    };

     dpcon@3 {
        num_priorities=<2>;
    };

    dpcon@4 {
        num_priorities=<2>;
    };

     dpcon@5 {
        num_priorities=<2>;
    };

    dpcon@6 {
        num_priorities=<2>;
    };

     dpcon@7 {
        num_priorities=<2>;
    };

    dpcon@8 {
        num_priorities=<2>;
    };

     dpcon@9 {
        num_priorities=<2>;
    };

    dpcon@10 {
```

```
        num_priorities=<2>;
    };

     dpcon@11 {
        num_priorities=<2>;
    };

    dpcon@12 {
        num_priorities=<2>;
    };

     dpcon@13 {
        num_priorities=<2>;
    };

    dpcon@14 {
        num_priorities=<2>;
    };

     dpcon@15 {
        num_priorities=<2>;
    };
   };

    /*************************************************************
     * Connections
     *************************************************************/
    connections {
    connection@0{
        /* First copper port (ETH0 on the RDB chassis) */
        endpoint1 = "dpni@0";
        endpoint2 = "dpmac@1";
    };
    connection@1{
        /* Second copper port (ETH1 on the RDB chassis) */
        endpoint1 = "dpni@1";
        endpoint2 = "dpmac@2";
    };
    };
};
```

Supporting Documentation

General SEC information, Job Ring Interface (JRI)

DPAA1-specific SEC details - Queue Interface (QI)

8.3.2.7 Decompression Compression Engine (DCE)

Introduction

This section describes the software interface to DCE (Decompression Compression Engine) accelerator available on the LS2088A SoC.The interface is designed to simplify interaction with DCE as much as possible without loss of flexibility and acceleration offered by DCE hardware.

Hardware Overview

This section gives an overview of the operation of the DCE hardware to provide fundamentals for software developers using the driver API. More detailed information is available in the hardware reference manual.

The DCE is a hardware accelerator that is part of the Datapath Acceleration Architecture version 2 (DPAA2). The DCE is one of the DPAA2 accelerators that include others like security and pattern matching engines. These accelerators are connected using a queue manager (QMan) and buffer manager (BMan) that allows data to be exchanged between software and accelerators.

Software enqueues data to a TX frame queue leading to DCE. DCE receives the data and processes it. It then enqueues a response on an RX frame queue leading back to software. The software then provides a DCE object that abstracts the details of frame queue configuration and usage, as well as other hardware details. This object is called DPDCEI.

Example Application

The LSDK contains an example application called dce-api-perf-test.c This test can be run in multiple modes that simulate many of the interesting DCE use cases. The README in the dce directory has instructions on how to run the test.

Software Details

User-space Interface

DCE Driver

Provides a set of user-space APIs that simplifies access to DCE. The driver provides accessor objects called sessions which maintain state in coordination with the hardware. Users can pull the responses from DCE . This DCE driver is meant to be entirely sufficient for a user to use DCE without having to read the related HW documents. It is documented in the dce repository included in `<PATH_TO_LSDK>/packages/apps/dce/dce.h`

Linux

There is no DCE driver in the Kernel.

Functionality

Configuration

The *DCE* configuration and setup is documented in the article DPDCEI Commands.

Build Procedure

The procedure is a standard LSDK build.

Test Procedure

Refer to https://source.codeaurora.org/external/qoriq/qoriq-components/dce/tree/README?h=github.qoriq-os/integration for detailed descriptions of sample DCE test procedure.

8.3.3 DPAA2 Standard Linux Documentation

Following is a summary of relevant documentation from standard Linux sources and formats. It provides links to these documents, provides a snapshot of the document, or both.

8.3.3.1 Kernel Documentation Directory

The Linux kernel source code contains a documentation directory, and there is some information there that is relevant to DPAA2. It is possible to see the upstream versions of these documents by going to https://www.kernel.org/ and browsing the Linux source code trees.

- Kernel Management Complex (MC) bus driver: This document is in-flight to kernel.org so a copy is provided below rather than a link to kernel.org.

```
Copyright (C) 2016 Freescale Semiconductor Inc.

DPAA2 (Data Path Acceleration Architecture Gen2)
-----------------------------------------------
```

```
This document provides an overview of the Freescale DPAA2 architecture
and how it is integrated into the Linux kernel.

Contents summary
   -DPAA2 overview
   -Overview of DPAA2 objects
   -DPAA2 Linux driver architecture overview
        -bus driver
        -dprc driver
        -allocator
        -dpio driver
        -Ethernet
        -mac

DPAA2 Overview
--------------

DPAA2 is a hardware architecture designed for high-speeed network
packet processing.  DPAA2 consists of sophisticated mechanisms for
processing Ethernet packets, queue management, buffer management,
autonomous L2 switching, virtual Ethernet bridging, and accelerator
(e.g. crypto) sharing.


A DPAA2 hardware component called the Management Complex (or MC) manages the
DPAA2 hardware resources.  The MC provides an object-based abstraction for
software drivers to use the DPAA2 hardware.

The MC uses DPAA2 hardware resources such as queues, buffer pools, and
network ports to create functional objects/devices such as network
interfaces, an L2 switch, or accelerator instances.

The MC provides memory-mapped I/O command interfaces (MC portals)
which DPAA2 software drivers use to operate on DPAA2 objects:

         +--------------------------------------+
         |                  OS                  |
         |                        DPAA2 drivers |
         |                             |        |
         +-----------------------------|--------+
                                       |
                                       | (create,discover,connect
                                       |  config,use,destroy)
                                       |
                       DPAA2           |
         +-------------------------| mc portal |-+
         |                         |        |
         |   +- - - - - - - - - - -V- - -+  |
         |   |                           |  |
         |   |   Management Complex (MC)     |  |
         |   |                           |  |
         |   +- - - - - - - - - - - - - -+  |
         |                                  |
         | Hardware                  Hardware   |
         | Resources                 Objects    |
         | ---------                 -------    |
         | -queues                   -DPRC      |
         | -buffer pools             -DPMCP     |
         | -Eth MACs/ports           -DPIO      |
```

```
         | -network interface        -DPNI      |
         |  profiles                 -DPMAC     |
         | -queue portals            -DPBP      |
         | -MC portals                ...       |
         |  ...                                 |
         |                                      |
         +--------------------------------------+

The MC mediates operations such as create, discover,
connect, configuration, and destroy.  Fast-path operations
on data, such as packet transmit/receive, are not mediated by
the MC and are done directly using memory mapped regions in
DPIO objects.

Overview of DPAA2 Objects
-------------------------
The section provides a brief overview of some key objects
in the DPAA2 hardware.  A simple scenario is described illustrating
the objects involved in creating a network interfaces.

-DPRC (Datapath Resource Container)

    A DPRC is an container object that holds all the other
    types of DPAA2 objects.  In the example diagram below there
    are 8 objects of 5 types (DPMCP, DPIO, DPBP, DPNI, and DPMAC)
    in the container.

    +---------------------------------------------------------+
    | DPRC                                                    |
    |                                                         |
    |  +--------+  +--------+  +--------+  +--------+  +--------+  |
    |  | DPMCP |  | DPIO  |  | DPBP  |  | DPNI  |  | DPMAC |  |
    |  +--------+  +--------+  +--------+  +---+---+  +---+---+  |
    |  | DPMCP |  | DPIO  |                                  |
    |  +--------+  +--------+                                  |
    |  | DPMCP |                                              |
    |  +--------+                                              |
    |                                                         |
    +---------------------------------------------------------+

    From the point of view of an OS, a DPRC is bus-like.  Like
    a plug-and-play bus, such as PCI, DPRC commands can be used to
    enumerate the contents of the DPRC, discover the hardware
    objects present (including mappable regions and interrupts).

     dprc.1 (bus)
       |
       +--+--------+-------+-------+-------+
          |        |       |       |       |
        dpmcp.1  dpio.1  dpbp.1  dpni.1  dpmac.1
        dpmcp.2  dpio.2
        dpmcp.3

    Hardware objects can be created and destroyed dynamically, providing
    the ability to hot plug/unplug objects in and out of the DPRC.

    A DPRC has a mappable mmio region (an MC portal) that can be used
    to send MC commands.  It has an interrupt for status events (like
    hotplug).
```

```
    All objects in a container share the same hardware "isolation context".
    This means that with respect to an IOMMU the isolation granularity
    is at the DPRC (container) level, not at the individual object
    level.

    DPRCs can be defined statically and populated with objects
    via a config file passed to the MC when firmware starts
    it.  There is also a Linux user space tool called "restool"
    that can be used to create/destroy containers and objects
    dynamically.

-DPAA2 Objects for an Ethernet Network Interface

    A typical Ethernet NIC is monolithic-- the NIC device contains TX/RX
    queuing mechanisms, configuration mechanisms, buffer management,
    physical ports, and interrupts.  DPAA2 uses a more granular approach
    utilizing multiple hardware objects.  Each object has specialized
    functions, and are used together by software to provide Ethernet network
    interface functionality.  This approach provides efficient use of finite
    hardware resources, flexibility, and performance advantages.

    The diagram below shows the objects needed for a simple
    network interface configuration on a system with 2 CPUs.



           +---+---+ +---+---+
              CPU0     CPU1
           +---+---+ +---+---+
               |         |
           +---+---+ +---+---+
              DPIO     DPIO
           +---+---+ +---+---+
                 \     /
                  \   /
                   \ /
                +---+---+
                   DPNI  --- DPBP,DPMCP
                +---+---+
                    |
                    |
                +---+---+
                  DPMAC
                +---+---+
                    |
                 port/PHY

    Below the objects are described.  For each object a brief description
    is provided along with a summary of the kinds of operations the object
    supports and a summary of key resources of the object (mmio regions
    and irqs).

       -DPMAC (Datapath Ethernet MAC): represents an Ethernet MAC, a
        hardware device that connects to an Ethernet PHY and allows
        physical transmission and reception of Ethernet frames.
           -mmio regions: none
           -irqs: dpni link change
           -commands: set link up/down, link config, get stats,
             irq config, enable, reset
```

```
        -DPNI (Datapath Network Interface): contains TX/RX queues,
         network interface configuration, and rx buffer pool configuration
         mechanisms.
            -mmio regions: none
            -irqs: link state
            -commands: port config, offload config, queue config,
             parse/classify config, irq config, enable, reset

        -DPIO (Datapath I/O): provides interfaces to enqueue and dequeue
         packets and do hardware buffer pool management operations.  For
         optimum performance there is typically one DPIO per CPU.  This allows
         each CPU to perform simultaneous enqueue/dequeue operations.
            -mmio regions: queue operations, buffer mgmt
            -irqs: data availability, congestion notification, buffer
                   pool depletion
            -commands: irq config, enable, reset

        -DPBP (Datapath Buffer Pool): represents a hardware buffer
         pool.
            -mmio regions: none
            -irqs: none
            -commands: enable, reset

        -DPMCP (Datapath MC Portal): provides an MC command portal.
         Used by drivers to send commands to the MC to manage
         objects.
            -mmio regions: MC command portal
            -irqs: command completion
            -commands: irq config, enable, reset

    Object Connections
    ------------------
    Some objects have explicit relationships that must
    be configured:

       -DPNI <--> DPMAC
       -DPNI <--> DPNI
       -DPNI <--> L2-switch-port
          A DPNI must be connected to something such as a DPMAC,
          another DPNI, or L2 switch port.  The DPNI connection
          is made via a DPRC command.

              +-------+  +-------+
              | DPNI  |  | DPMAC |
              +---+---+  +---+---+
                  |          |
                  +==========+

       -DPNI <--> DPBP
          A network interface requires a 'buffer pool' (DPBP
          object) which provides a list of pointers to memory
          where received Ethernet data is to be copied.  The
          Ethernet driver configures the DPBPs associated with
          the network interface.

    Interrupts
    ----------
    All interrupts generated by DPAA2 objects are message
    interrupts.  At the hardware level message interrupts
    generated by devices will normally have 3 components--
```

```
    1) a non-spoofable 'device-id' expressed on the hardware
    bus, 2) an address, 3) a data value.

    In the case of DPAA2 devices/objects, all objects in the
    same container/DPRC share the same 'device-id'.
    For Arm-based SoC this is the same as the stream ID.


DPAA2 Linux Driver Overview
---------------------------

This section provides an overview of the Linux kernel drivers for
DPAA2-- 1) the bus driver and associated "DPAA2 infrastructure"
drivers and 2) functional object drivers (such as Ethernet).

As described previously, a DPRC is a container that holds the other
types of DPAA2 objects.  It is functionally similar to a plug-and-play
bus controller.

Each object in the DPRC is a Linux "device" and is bound to a driver.
The diagram below shows the Linux drivers involved in a networking
scenario and the objects bound to each driver.  A brief description
of each driver follows.



                                      +------------+
                                      | OS Network |
                                      |   Stack    |
                +------------+        +------------+
                | Allocator  |. . . . | Ethernet   |
                |(dpmcp,dpbp)|        |   (dpni)   |
                +-.----------+        +---+---+----+
                  .          .            ^   |
                  .           .     <data avail, |   |<enqueue,
                 .             .     tx confirm> |   | dequeue>
    +-------------+             .               |   |
    | DPRC driver |              .              +---+---V----+     +----------+
    |   (dprc)    |               . . . . . .   | DPIO driver|     |   MAC    |
    +----------+--+                             |  (dpio)    |     | (dpmac)  |
               |                                +------+-----+     +-----+---+
               |<dev add/remove>                       |                 |
               |                                       |                 |
          +----+--------------+                        |              +--+---+
          |   mc-bus driver   |                        |              | PHY  |
          |                   |                        |              |driver|
          | /fsl-mc@80c000000 |                        |              +--+---+
          +-------------------+                        |                 |
                                                       |                 |
 ================================ HARDWARE =========|=================|======
                                                     DPIO                |
                                                       |                 |
                                                     DPNI---DPBP         |
                                                       |                 |
                                                     DPMAC               |
                                                       |                 |
                                                      PHY ---------------+
 ===================================================|=======================

A brief description of each driver is provided below.
```

```
mc-bus driver
-------------
The mc-bus driver is a platform driver and is probed from an
"/fsl-mc@xxxx" node in the device tree passed in by boot firmware.
It is responsible for bootstrapping the DPAA2 kernel infrastructure.
Key functions include:
   -registering a new bus type named "fsl-mc" with the kernel,
    and implementing bus call-backs (e.g. match/uevent/dev_groups)
   -implemeting APIs for DPAA2 driver registration and for device
    add/remove
   -creates an MSI irq domain
   -do a device add of the 'root' DPRC device, which is needed
    to bootstrap things

DPRC driver
-----------
The dprc-driver is bound to DPRC objects and does runtime management
of a bus instance.  It performs the initial bus scan of the DPRC
and handles interrupts for container events such as hot plug.

Allocator
----------
Certain objects such as DPMCP and DPBP are generic and fungible,
and are intended to be used by other drivers.  For example,
the DPAA2 Ethernet driver needs:
   -DPMCPs to send MC commands, to configure network interfaces
   -DPBPs for network buffer pools

The allocator driver registers for these allocatable object types
and those objects are bound to the allocator when the bus is probed.
The allocator maintains a pool of objects that are available for
allocation by other DPAA2 drivers.

DPIO driver
-----------
The DPIO driver is bound to DPIO objects and provides services that allow
other drivers such as the Ethernet driver to receive and transmit data.
Key services include:
    -data availability notifications
    -hardware queuing operations (enqueue and dequeue of data)
    -hardware buffer pool management

There is typically one DPIO object per physical CPU for optimum
performance, allowing each CPU to simultaneously enqueue
and dequeue data.

The DPIO driver operates on behalf of all DPAA2 drivers
active in the kernel--  Ethernet, crypto, compression,
etc.

Ethernet
--------
The Ethernet driver is bound to a DPNI and implements the kernel
interfaces needed to connect the DPAA2 network interface to
the network stack.

Each DPNI corresponds to a Linux network interface.

MAC driver
```

```
    ----------
    An Ethernet PHY is an off-chip, board specific component and is managed
    by the appropriate PHY driver via an mdio bus.  The MAC driver
    plays a role of being a proxy between the PHY driver and the
    MC.  It does this proxy via the MC commands to a DPMAC object.
```

8.3.3.2 DPAA2 Resource Management Tool (restool) User Manual

Restool is a Linux user space program that allows DPAA2 objects to be created, destroyed, and manipulated. Its primary documentation is in the style of a Linux man page.

The Management Complex architecture uses a hardware object called a “container” (or DPRC) to hold I/O resources and hardware objects for use by GPP software contexts.

DPRCs can be created and populated in two different ways:

- at MC initialization during system boot in a configuration file called a “DPL file”
- dynamically at runtime

This document describes how restool can be used to do dynamic management of MC resources in the context of Linux. Key resource management operations include:

- listing containers and their contents
- creating/destroying containers
- creating/destroying new MC objects
- move object between parent container and child container
- establishing connections between MC objects

The version of restool -restool v1.4 - included in this release is compatible will all MC firmware versions and will export different options based on the firmware found on the board. In the following pages it will be described the available options found running MC10.x on the board.

8.3.3.2.1 DPRC commands

8.3.3.2.1.1 list command

The **list** command lists all containers in the system.

SYNTAX:

restool dprc list

ARGUMENTS:

none

EXAMPLE:

List all the containers in the system

```
    $ restool dprc list
      dprc.1
          dprc.2
          dprc.3
```

The container hierarchy (parent-child relationships) is shown by indentation.

8.3.3.2.1.2 show command

The **show** command displays the contents (objects and resources) of a DPRC/container.

SYNTAX:

restool dprc show *<container>*

restool dprc show *<container>* **--resources**

restool dprc show *<container>* **--resource-type**=<resource-type>

ARGUMENTS:

<container>

A string specifying the target dprc—e.g. “dprc.2”.

The container argument value “mc.global” is special and refers to the global

container of resource pools inside the Management Complex.

--resources

Display a container’s resource count for each resource (instead of displaying

objects/resources)

--resource-type <resource-type>

Specifies the type of resource to list. The resource-type argument is a string specifying

the resource name—e.g. “mcp”.

EXAMPLE :

Show all objects in dprc 2:

```
$ restool dprc show dprc.2
dprc.2 contains 6 objects:
object label plugged state
dpni.7 xyz  plugged
dpni.8 abc  plugged
dpio.2 plugged
dpio.3 unplugged
dpcon.9 plugged
dpbp.1 plugged
```

Show all resources in dprc 2:

```
$ restool dprc show dprc.2 --resources
bpid: 16
fqid: 100
channel: 4
qpr: 2
cgid: 2
```

Show dprc with no objects in it:

```
$ restool dprc show dprc.4
(empty)
```

Show all buffer pool IDs in dprc 2:

```
$ restool dprc show dprc.2 --resource-type=bp
bp.35 - bp.36
bp.50
bp.52 - bp.63
```

Show all MC portal IDs in the global MC container:

```
$ restool dprc show mc.global --resource-type=mcp
mcp.30 - mcp.250
```

8.3.3.2.1.3 info command

The **info** command displays detailed information about a specific container.

SYNTAX:

restool dprc info *<dprc-object>* [**--verbose**]

ARGUMENTS :

<dprc-object>

Specifies which container to show detailed info for. The object argument is a string

specifying the container name—e.g. “dprc.2”.

--verbose

Shows extended/verbose information about the object

EXAMPLE:

```
$ restool dprc info dprc.2
container id: 2
icid: 2
portal id: 5
version: 0.0
dprc options: 0x3
    DPRC_CFG_OPT_SPAWN_ALLOWED
    DPRC_CFG_OPT_ALLOC_ALLOWED
object label: nadk’s dprc

$ restool dprc info dprc.2 --verbose
container id: 2
icid: 2
portal id: 5
version: 0.0
dprc options: 0x3
    DPRC_CFG_OPT_SPAWN_ALLOWED
    DPRC_CFG_OPT_ALLOC_ALLOWED
object label: nadk-usage-dprc
number of mappable regions: 1
number of interrupts: 1
interrupt 0's mask: 0
interrupt 0's status: 0x1
```

8.3.3.2.1.4 create command

The **create** command creates a new child DPRC under the specified parent. The name/id of the object created is displayed to stdout.

SYNTAX:

restool dprc create <parent-container> [**--options**=*<options-mask>*] [**--label**=*<object's-label>*]

OPTIONS :

<parent-container>

--options=*<options-mask>*

Where <options-mask> is a comma separated list of DPRC options:

```
            DPRC_CFG_OPT_SPAWN_ALLOWED
            DPRC_CFG_OPT_ALLOC_ALLOWED
            DPRC_CFG_OPT_OBJ_CREATE_ALLOWED
            DPRC_CFG_OPT_TOPOLOGY_CHANGES_ALLOWED
            DPRC_CFG_OPT_IOMMU_BYPASS
            DPRC_CFG_OPT_AIOP
            DPRC_CFG_OPT_IRQ_CFG_ALLOWED
```

--label=*<object's-label>*

Specify a label for the newly created object. It is kind of an alias for that object.

Length of the string is 15 characters maximum.

Say --label="nadk's dprc"

EXAMPLE:

Create a child DPRC under parent dprc.1 with default options:

```
    $ restool dprc create dprc.1
    dprc.9 is created under dprc.1
```

Create a child DPRC under parent dprc.1 with default options, with label "nadk's dprc":

```
    $ restool dprc create dprc.1 --label="nadk's dprc"
    dprc.11 is created under dprc.1
```

8.3.3.2.1.5 create command

The **create** command creates a new child DPRC under the specified parent. The name/id of the object created is displayed to stdout.

SYNTAX:

restool dprc create <parent-container> [**--options**=*<options-mask>*] [**--label**=*<object's-label>*]

OPTIONS :

<parent-container>

--options=*<options-mask>*

Where <options-mask> is a comma separated list of DPRC options:

```
            DPRC_CFG_OPT_SPAWN_ALLOWED
            DPRC_CFG_OPT_ALLOC_ALLOWED
            DPRC_CFG_OPT_OBJ_CREATE_ALLOWED
            DPRC_CFG_OPT_TOPOLOGY_CHANGES_ALLOWED
            DPRC_CFG_OPT_IOMMU_BYPASS
            DPRC_CFG_OPT_AIOP
            DPRC_CFG_OPT_IRQ_CFG_ALLOWED
```

--label=*<object's-label>*

Specify a label for the newly created object. It is kind of an alias for that object.

Length of the string is 15 characters maximum.

Say --label="nadk's dprc"

EXAMPLE:

Create a child DPRC under parent dprc.1 with default options:

```
    $ restool dprc create dprc.1
    dprc.9 is created under dprc.1
```

Create a child DPRC under parent dprc.1 with default options, with label "nadk's dprc":

```
    $ restool dprc create dprc.1 --label="nadk's dprc"
    dprc.11 is created under dprc.1
```

8.3.3.2.1.6 destroy command

The **destroy** command destroys the specified DPRC.

SYNTAX:

restool dprc destroy <container> **--help**

OPTIONS:

<container>

--help

Displays help for the command.

EXAMPLE:

Destroy a specified DPRC, say dprc.2:

```
    $ restool dprc destroy dprc.2
    dprc.2 is destroyed
```

8.3.3.2.1.7 assign command

The **assign** command moves an object or resource from a parent container to a child container. Object (dpni, dpbp, etc) assignment is always explicit and the exact object id to be assigned must be specified. Resources (e.g. mcp, bp, fq, etc) are assigned by type and count.

SYNTAX:

restool dprc assign <parent-*container*> [**--child=** <child-*container*>] **--object=** <*object*> **--plugged=** <*state*>

This syntax changes the plugged state. The child-container must be the same as parent-container, or omit --target option. It is not possible to change the plugged state of a dprc.

restool dprc assign <parent-*container*> [**--child=**<child-*container*>] **--object=**<*object*>

This syntax moves one object from parent-container to another, so the target-container must be different from the parent-container. Limitation: cannot move dprc from one container to another.

restool dprc assign <parent-*container*> [**--child=**<child-*container*>] --resource-type=<*type*> **-- count=**<*number*>

This syntax moves a resource from parent-container to a child-container. If the childcontainer is the same as the parent-container, the resource will be taken from the parent of parent-container and will be assigned to the parent-container.

ARGUMENTS :

<*container*>

Specifies the parent container from which the object will be moved.

--object= <*object*>

Specifies the object to assign— value is a string specifying object name and ID (e.g. dpni.5)

--child=<*child-container*>

Specifies the destination container for the operation. Valid values are any child container. (The target container may be the same as the parent container, allowing “assign to self”)

--plugged= <*state*>

Specifies the plugged state of the object (valid values are 0 or 1)

--resource-type= <*type*>

String specifying the resource type to assign (e.g “mcp”, “fq”, “cg”, etc). To see valid resources that may be assigned use the “dprc show <container> --resources” command.

--count= <*number*>

Number of resources to assign.

EXAMPLE:

Set the plugged state of dpni.5. Note source and destination containers are the same.

```
$ restool dprc assign dprc.1 --object=dpni.5 --child=dprc.1
--plugged=1
$ restool dprc assign dprc.1 --object=dpni.5 --plugged=1
```

Unset the plugged state of dpni.5. Note source and destination containers are the same.

```
$ restool dprc assign dprc.1 --object=dpni.5 --child=dprc.1
--plugged=0
$ restool dprc assign dprc.1 --object=dpni.5 --plugged=0
```

Move dpni.5 from dprc.1 (parent) to dprc.3 (child):

```
$ restool dprc assign dprc.1 --object=dpni.5 --child=dprc.3
```

Move 3 mcp resources from dprc.1 (parent) to dprc.2 (child):

```
$ restool dprc assign dprc.1 --resource-type=mcp --count=3
--child=dprc.2
```

8.3.3.2.1.8 unassign command

The **unassign** command moves an object or resource from a child container to a parent container

SYNTAX:

restool dprc unassign *<container>* **--object=** *<object>* [**--child=** <child-*container*>]

restool dprc unassign *<container>* **--resource-type=** *<type>* **--count** *<number>* [**--child=** <child-*container*>]

ARGUMENTS :

<container>

Specifies the container to which the object will be moved.

--object= *<object>*

Specifies the object to unassign— value is a string specifying object name and ID (e.g.

dpni.5)

--child= <child-*container*>

Specifies the container from which the object/resource will be moved from.

--plugged= *<plugged-state>*

Specifies the plugged state of the object (valid values are 0 or 1)

--resource-type= *<type>*

String specifying the resource type to assign (e.g “mcp”, “fq”, “cg”, etc)

--count= *<number>*

Number of resources to unassign.

EXAMPLE:

Unassign 3 mcp resources from dprc.2 (child) to dprc.1 (parent):

```
$ restool dprc unassign dprc.1 --resource-type=mcp --count=3
--child=dprc.2
```

Unassign dpni.5 from dprc.3 (child) to dprc.1 (parent):

```
$ restool dprc unassign dprc.1 --object=dpni.5 --child=dprc.3
```

8.3.3.2.1.9 set-quota command

The **set-quota** command sets quota policies for a child container, specifying the number of resources a child may take from its parent container. But remember a parent can assign any number of resource to its child if it wants to, and if it has enough resources to assign. So the quota is effective only when the child dprc does have enough resource and it wants to borrow resource

from its parent. It could only “borrow” the quota number of resources from its parent.

SYNTAX:

restool dprc set-quota *<parent-container>* **--resource-type=** *<type>* **--count=** *<number>*

--child-container= *<container>*

ARGUMENTS :

<parent-container>

Specifies the parent container.

--resource-type= *<type>*

String specifying the resource type to set the quota for (e.g “mcp”, “fq”, “cg”, etc)

--count= *<number>*

Max number of resources the child is able to allocate.

--child-container= *<container>*

EXAMPLE:

Set a quota of 10 mcp resource that child container dprc.5 may take from parent dprc.1:

```
$ restool dprc set-quota dprc.1 --resource-type=mcp --count=10
   --child-container=dprc.5
```

8.3.3.2.1.10 set-label command

The **set-label** command sets label for any objects excluding dprc.1

SYNTAX:

restool dprc set-label *<object>* **--label=** *<label>*

ARGUMENTS :

<object>

Specifies the object to be set.

--label= *<label>*

String specifying the label, maximum length is 15 characters.

EXAMPLE:

Set label of dprc.4 to “mountain view”:

```
$ restool dprc set-label dprc.4 --label=”mountain view”
```

8.3.3.2.1.11 connect command

The **connect** command connects 2 objects, creating a link between them.

SYNTAX:

restool dprc connect *<container>* **--endpoint1=** *<object>* **--endpoint2=** *<object>*

ARGUMENTS :

<container>

A string specifying the target dprc—e.g. “dprc.2”.

--endpoint1=*<object>*

Specifies the first endpoint object.

--endpoint2=*<object>*

Specifies the second endpoint object.

EXAMPLE:

The connect command connects a network object such as a DPNI to a peer object such as a DPMAC or DPSW port.

Connect dpni.2 to dpmac.5:

```
$ restool dprc connect dprc.2 --endpoint1=dpni.2 --endpoint2=dpmac.5
```

Connect dpni.2 to dpsw.1 interface 7:

```
$ restool dprc connect dprc.2 --endpoint1=dpni.2 --endpoint2=dpsw.1.7
```

8.3.3.2.1.12 disconnect command

The **disconnect** command removes the link between two objects. Either endpoint can be

specified as the target of the operation.

SYNTAX:

restool dprc disconnect *<container>* **--endpoint=***<object>*

ARGUMENTS:

<container>

A string specifying the target dprc—e.g. “dprc.2”.

--endpoint=*<object>*

Specifies the first endpoint object.

EXAMPLE:

Remove the link between dpni.2 and dpmac.5

```
$ restool dprc disconnect dprc.2 –endpoint=dpni.2
```

8.3.3.2.1.13 generate-dpl command

The **generate-dpl** command prints to the standard output a DPL syntax file describing the specified container

SYNTAX:

restool dprc generate-dpl *<container>*

ARGUMENTS:

<container>

A string specifying the target dprc—e.g. “dprc.2”.

EXAMPLE:

```
Generate a DPL for dprc.1
```

```
    $ restool dprc generate-dpl dprc.1
```

8.3.3.2.1.14 set-locked command

The **set-locked** command locks/unlocks a container and the entire hierarchy that belongs to it. In case a container is locked, it will no longer be allowed to: create/destroy objects, create/destroy child containers, assign/unassign objects to/from its child-containers and lock/unlock a child-container.

SYNTAX:

restool dprc set-locked <child-container> **--locked=***<state>*

This syntax changes the locked state of child-container.

ARGUMENTS :

<*child-container*>

Specifies the child container which will be locked/unlocked. The child-container must be the child of the container executing the command.

--locked=*<state>*

Specifies the locked state of the object (valid values are 0 or 1)

EXAMPLE:

Lock the container dprc.2 that is the child container of dprc.1.

```
    $ restool dprc set-locked dprc.2 --locked=1
```

8.3.3.2.2 DPNI Commands

8.3.3.2.2.1 help command

The **help** command displays usage information for the DPNI object

SYNTAX:

restool dpni help

ARGUMENTS:

none

EXAMPLE:

```
    $ restool dpni help
    usage: restool dpni <command> [--help][ARGS…]
    Where <command> can be:
        info - displays detailed information about a DPNI object.
        create - creates a child DPNI under the root DPRC
        destroy - destroys a child DPNI under the root DPRC

    For command-specific help, use the --help option available for each command.
```

8.3.3.2.2.2 info command

The **info** command displays detailed information about a specific dpni object.

SYNTAX:

restool dpni info *<dpni-object>* [**--verbose**]

ARGUMENTS :

<dpni-object>

Specifies which dpni object to show detailed info for. The dpni-object argument is a

string specifying the object name—e.g. “dpni.7”.

--verbose

Shows extended/verbose information about the object

EXAMPLE:

```
$ restool dpni info dpni.7
dpni version: 5.0
dpni id: 7
plugged state: plugged
endpoint: dpmac.2, link is down
link status: 0 - down
mac address: 00:00:00:00:00:07
dpni_attr.options value is: 0x190
    DPNI_OPT_DIST_HASH
    DPNI_OPT_UNICAST_FILTER
    DPNI_OPT_MULTICAST_FILTER
max senders: 8
max traffic classes: 1
max distribution's size per RX traffic class:
    class 0's size: 15
max unicast filters: 16
max multicast filters: 64
max vlan filters: 0
max QoS entries: 0
max QoS key size: 0
max distribution key size: 4

$ restool dpni info dpni.7 --verbose
dpni version: 5.0
dpni id: 7
plugged state: plugged
endpoint: dpmac.2, link is down
link status: 0 - down
mac address: 00:00:00:00:00:07
dpni_attr.options value is: 0x190
    DPNI_OPT_DIST_HASH
    DPNI_OPT_UNICAST_FILTER
    DPNI_OPT_MULTICAST_FILTER
max senders: 8
max traffic classes: 1
max distribution's size per RX traffic class:
    class 0's size: 15
max unicast filters: 16
max multicast filters: 64
max vlan filters: 0
```

```
    max QoS entries: 0
    max QoS key size: 0
    max distribution key size: 4
    number of mappable regions: 0
    number of interrupts: 1
    interrupt 0's mask: 0
    interrupt 0's status: 0
```

8.3.3.2.2.3 create command

The **create** command creates a new DPNI. The name/id of the object created is displayed to stdout.

SYNTAX:

restool dpni create --mac-addr= *<addr>* [OPTIONS]

ARGUMENTS :

--mac-addr= *<addr>*

String specifying primary MAC address (e.g., 00:00:05:00:00:05)

OPTIONS :

--max-senders= *<number>*

maximum number of different senders; will be used as the number of dedicated TX flows;

In case it isn't power-of-2 it will be ceiling to the next power-of-2 as HW demand it; 0 will

be treated as 1

--options= *<options-mask>*

Where *<options-mask>* is a comma separated list of DPNI options:

```
            DPNI_OPT_ALLOW_DIST_KEY_PER_TC
            DPNI_OPT_TX_CONF_DISABLED
            DPNI_OPT_PRIVATE_TX_CONF_ERR_DISABLED
            DPNI_OPT_DIST_HASH
            DPNI_OPT_DIST_FS
            DPNI_OPT_UNICAST_FILTER
            DPNI_OPT_MULTICAST_FILTER
            DPNI_OPT_VLAN_FILTER
            DPNI_OPT_IPR
            DPNI_OPT_IPF
            DPNI_OPT_VLAN_MANIPULATION
            DPNI_OPT_QOS_MASK_SUPPORT
            DPNI_OPT_FS_MASK_SUPPORT
```

--max-tcs= *<number>*

Specifies the maximum number of traffic-classes

--max-dist-per-tc= *<dist-size>*,*<dist-size>*,…

Comma separated list of counts specifying the maximum distribution's size per RX traffic-

class

--max-unicast-filters= *<number>*

maximum number of unicast filters; 0 will be treated as 16

--max-multicast-filters= *<number>*

maximum number of multicast filters; 0 will be treated as 64

--max-vlan-filters= *<number>*

maximum number of vlan filters; '0' will be treated as '16'

--max-qos-entries= *<number>*

if max_tcs > 1, declares the maximum entries for the QoS table; '0' will be treated as '64'

--max-qos-key-size= *<number>*

maximum key size for the QoS look-up; '0' will be treated as '24' which enough for IPv4 5-tuple

--max-dist-key-size= *<number>*

maximum key size for the distribution; '0' will be treated as '24' which enough for IPv4 5-tuple

EXAMPLE:

Create a DPNI, specifying MAC address, with all default options:

```
$ restool dpni create --mac-addr=00:00:05:00:00:05
dpni.9 is crated under dprc.1
```

Create a DPNI, specifying MAC address, and some options:

```
$ restool dpni create --mac-addr=00:00:05:00:00:05
--options=DPNI_OPT_MULTICAST_FILTER,DPNI_OPT_UNICAST_FILTER
dpni.11 is created under dprc.1
```

8.3.3.2.2.4 create command

The **create** command creates a new DPNI. The name/id of the object created is displayed to stdout.

In the following part are presented the options when creating a DPNI using MC10.x firmware version. Also, restool is compatible with older MC firmware versions and will export another set of options in these other cases.

SYNTAX:

restool dpni create [OPTIONS]

OPTIONS :

--options= *<options-mask>*

Where *<options-mask>* is a comma separated list of DPNI options:

```
        DPNI_OPT_TX_FRM_RELEASE
        DPNI_OPT_NO_MAC_FILTER
        DPNI_OPT_HAS_POLICING
        DPNI_OPT_SHARED_CONGESTION
        DPNI_OPT_HAS_KEY_MASKING
        DPNI_OPT_NO_FS
```

--num-queues= *<number>*

Number of TX/RX queues use for traffic distribution. Used to distribute traffic to multiple GPP cores.
Defaults to one queue. Maximim supported value is 8

--num-tcs= *<number>*

Number of traffic classes (TCs), reserved for the DPNI. Defaults to one TC. Maximum supported value is 8

--num-entries=*<number>*
Number of entries in the MAC address filtering table. Allows both unicast and multicast entries.
By default, there are 80 entries.Maximum supported value is 80.

--vlan-entries=*<number>*
Number of entries in the VLAN address filtering table. By default, VLAN filtering is disabled. Maximum values is 16.

--qos-entries=*<number>*
Number of entries in the QoS classification table. Ignored if DPNI has a single TC. By default, set to 64.

--fs-entries=*<number>*
Number of entries in the flow steering table. Defaults to 64. Maximum value is 1024.

--container=*<container-name>*
Specifies the parent container name. e.g. dprc.2, dprc.3 etc.

EXAMPLE:

Create a DPNI with all default options:

```
$ restool dpni create
dpni.9 is created under dprc.1
```

Create a DPNI with some specific options as a child object of dprc.2 (dprc already created):

```
$ restool dpni create --options=DPNI_OPT_TX_FRM_RELEASE,DPNI_OPT_NO_FS --container=dprc.2
dpni.11 is created under dprc.2
```

8.3.3.2.2.5 destroy command

The **destroy** command destroys a DPNI.

SYNTAX:

restool dpni destroy *<dpni-object>*

ARGUMENTS :

<dpni-object>

Specifies which DPNI to destroy.

EXAMPLE:

```
$ restool dpni destroy dpni.9
dpni.9 is destroyed
```

8.3.3.2.3 DPIO Commands

8.3.3.2.3.1 help command

The **help** command displays usage information for the DPIO object

SYNTAX:

restool dpio help

ARGUMENTS:

none

EXAMPLE:

```
    $ restool dpio help
    usage: restool dpio <command> [--help][ARGS…]
    Where <command> can be:
    info - displays detailed information about a DPIO object.
    create - creates a DPIO under the root DPRC
    destroy - destroys a DPIO under the root DPRC

    For command-specific help, use the --help option available for each command.
```

8.3.3.2.3.2 info command

The **info** command displays detailed information about a specific dpio object.

SYNTAX:

restool dpio info *<dpio-object>* [**--verbose**]

ARGUMENTS :

<dpio-object>

Specifies which dpio object to show detailed info for. The dpio-object argument is a

string specifying the object name—e.g. “dpio.7”.

--verbose

Shows extended/verbose information about the object

EXAMPLE:

```
# restool dpio info dpio.1
    dpio version: 3.0
    dpio id: 1
    plugged state: plugged
    offset of qbman software portal cache-enabled area: 0x20000
    offset of qbman software portal cache-inhibited area: 0x4020000
    qbman software portal id: 0x2
    dpio channel mode is: DPIO_LOCAL_CHANNEL
    number of priorities is: 0x8
    # restool dpio info dpio.1 --verbose
    dpio version: 3.0
    dpio id: 1
    plugged state: plugged
    offset of qbman software portal cache-enabled area: 0x20000
    offset of qbman software portal cache-inhibited area: 0x4020000
    qbman software portal id: 0x2
    dpio channel mode is: DPIO_LOCAL_CHANNEL
    number of priorities is: 0x8
    number of mappable regions: 2
    number of interrupts: 1
    interrupt 0's mask: 0
    interrupt 0's status: 0x8
```

8.3.3.2.3.3 create command

The **create** command creates a new DPIO. The name/id of the object created is displayed to stdout.

SYNTAX:

restool dpio create [OPTIONS]

OPTIONS :

--channel-mode=*<mode>*

Where *<mode>* is one of:

```
            DPIO_LOCAL_CHANNEL
            DPIO_NO_CHANNEL
```

Default value is DPIO_LOCAL_CHANNEL .

--num-priorities=*<number>*

Valid values for *<number>* are 1-8. Default value is 8.

EXAMPLE:

Create a DPIO with all default options:

$ restool dpio create

dpio.10 is created under dprc.1

Create a DPIO, specifying number of priorities:

```
    $ restool dpni create –num-priorities=4
    dpio.2 is created under dprc.1
```

8.3.3.2.3.4 create command

The **create** command creates a new DPIO. The name/id of the object created is displayed to stdout.

SYNTAX:

restool dpio create [OPTIONS]

OPTIONS :

--channel-mode=*<mode>*

Where *<mode>* is one of:

```
            DPIO_LOCAL_CHANNEL
            DPIO_NO_CHANNEL
```

Default value is DPIO_LOCAL_CHANNEL .

--num-priorities=*<number>*

Valid values for *<number>* are 1-8. Default value is 8.

--container=*<container_name>*

Specifies the parent container name. e.g. dprc.2, dprc.3 etc.

If it is not specified, the new object will be created under the default dprc.

EXAMPLE:

Create a DPIO with all default options:

```
    $ restool dpio create
    dpio.8 is created under dprc.1
```

Create a DPIO, specifying number of priorities:

```
    $ restool dpni create –num-priorities=4
    dpio.2 is created under dprc.1
```

8.3.3.2.3.5 destroy command

The **destroy** command destroys a DPIO.

SYNTAX:

restool dpio destroy *<dpio-object>*

ARGUMENTS :

<dpio-object>

Specifies which DPIO to destroy.

EXAMPLE:

```
    $ restool dpio destroy dpio.9
    dpio.9 is destroyed
```

8.3.3.2.4 DPSW Commands

text

8.3.3.2.4.1 help command

The **help** command displays usage information for the DPSW object

SYNTAX:

restool dpsw help

ARGUMENTS:

none

EXAMPLE:

```
$ restool dpsw help
    usage: restool dpsw <command> [--help][ARGS…]
    Where <command> can be:
    info - displays detailed information about a DPSW object.
    create - creates a DPSW under the root DPRC
    destroy - destroys a DPSW under the root DPRC

    For command-specific help, use the --help option available for each command.
```

8.3.3.2.4.2 info command

The **info** command displays detailed information about a specific dpsw object.

SYNTAX:

restool dpsw info *<dpsw-object>* [**--verbose**]

ARGUMENTS :

<dpsw-object>

Specifies which object to show detailed info for. The dpsw-object argument is a string

specifying the object name—e.g. “dpsw.2”.

--verbose

Shows extended/verbose information about the object

EXAMPLE:

```
    $ restool dpsw info dpsw.1
dpsw version: 6.0
dpsw id: 1
plugged state: unplugged
endpoints:
endpoint state: -1
        interface 0: No object associated
endpoint state: -1
        interface 1: No object associated
endpoint state: -1
        interface 2: No object associated
endpoint state: -1
        interface 3: No object associated
dpsw_attr.options value is: 0x1
        DPSW_OPT_FLOODING_DIS
max VLANs: 8
max FDBs: 8
DPSW frame storage memory size: 0
number of interfaces: 4
current number of VLANs: 1
current number of FDBs: 1
```

8.3.3.2.4.3 create command

The **create** command creates a new DPSW. The name/id of the object created is displayed to stdout.

SYNTAX:

restool dpsw create --num-ifs= *<number>* [OPTIONS]

ARGUMENTS :

--num-ifs= *<number>*

Number of external and internal interfaces.

OPTIONS :

--options= *<options-mask>*

Where *<options-mask>* is a comma separated list of DPSW options:

```
            DPSW_OPT_FLOODING_DIS

            DPSW_OPT_MULTICAST_DIS

            DPSW_OPT_CTRL_IF_DIS

            DPSW_OPT_FLOODING_METERING_DIS

            DPSW_OPT_METERING_EN
```

--max-vlans= *<number>*

Maximum Number of VLAN's. Default is 16.

--max-fdbs= *<number>*

Maximum Number of FDB's. Default is 16.

--num-fdb-entries= *<number>*

Number of FDB entries. Default is 1024.

--fdb-aging-time= *<number>*

Default FDB aging time in seconds. Default is 300 seconds.

--max-fdb-mc-groups= *<number>*

Number of multicast groups in each FDB table. Default is 32.

EXAMPLE:

Create a 4-port switch with all default options:

```
    $ restool dpsw create --num-ifs=4
    dpsw.8 is created under dprc.1
```

Create a 4-port switch with options:

```
    $ restool dpsw create -num-ifs=4 -max-vlans=8 -max-fdb-mc-groups=300
    --options=DPSW_OPT_TC_DIS,DPSW_OPT_FLOODING_DIS
    dpsw.2 is created under dprc.1
```

8.3.3.2.4.4 create command

The **create** command creates a new DPSW. The name/id of the object created is displayed to stdout.

SYNTAX:

restool dpsw create --num-ifs= *<number>* [OPTIONS]

ARGUMENTS :

--num-ifs= *<number>*

Number of external and internal interfaces.

OPTIONS :

--options= *<options-mask>*

Where *<options-mask>* is a comma separated list of DPSW options:

```
            DPSW_OPT_FLOODING_DIS

            DPSW_OPT_MULTICAST_DIS

            DPSW_OPT_CTRL_IF_DIS

            DPSW_OPT_FLOODING_METERING_DIS

            DPSW_OPT_METERING_EN
```

--max-vlans= *<number>*

Maximum Number of VLAN's. Default is 16.

--max-fdbs= *<number>*

Maximum Number of FDB's. Default is 16.

--num-fdb-entries= *<number>*

Number of FDB entries. Default is 1024.

--fdb-aging-time= *<number>*

Default FDB aging time in seconds. Default is 300 seconds.

--max-fdb-mc-groups= *<number>*

Number of multicast groups in each FDB table. Default is 32.

--container= *<container_name>*

Specifies the parent container name. e.g. dprc.2, dprc.3 etc.

If it is not specified, the new object will be created under the default dprc.

EXAMPLE:

Create a 4-port switch with all default options under dprc.2:

```
    $ restool dpsw create --num-ifs=4 --container=dprc.2
    dpsw.8 is created under dprc.2
```

Create a 4-port switch with options:

```
    $ restool dpsw create –num-ifs=4 –max-vlans=8 –max-fdb-mc-groups=300
    --options=DPSW_OPT_TC_DIS,DPSW_OPT_FLOODING_DIS
    dpsw.2 is created under dprc.1
```

8.3.3.2.4.5 destroy command

The **destroy** command destroys a DPSW.

SYNTAX:

restool dpsw destroy *<dpsw-object>*

ARGUMENTS :

<dpsw-object>

Specifies which DPSW to destroy.

EXAMPLE:

```
$ restool dpsw destroy dpsw.8
dpsw.8 is destroyed
```

8.3.3.2.5 DPBP Commands

8.3.3.2.5.1 help command

The **help** command displays usage information for the DPBP object

SYNTAX:

restool dpbp help

ARGUMENTS:

none

EXAMPLE:

```
$ restool dpbp help
usage: restool dpbp <command> [--help][ARGS…]
Where <command> can be:
info - displays detailed information about a DPBP object.
create - creates a DPBP under the root DPRC
destroy - destroys a DPBP under the root DPRC

For command-specific help, use the --help option available for each command.
```

8.3.3.2.5.2 info command

The **info** command displays detailed information about a specific dpbp object.

SYNTAX:

restool dpbp info *<dpbp-object>* [**--verbose**]

ARGUMENTS :

<dpbp-object>

Specifies which dpbp object to show detailed info for. The dpbp-object argument is a

string specifying the object name—e.g. “dpbp.3”.

--verbose

Shows extended/verbose information about the object

EXAMPLE:

```
$ restool dpbp info dpbp.1
dpbp version: 2.0
dpbp id: 1
plugged state: plugged
buffer pool id: 0
```

8.3.3.2.5.3 create command

The **create** command creates a new DPBP. The name/id of the object created is displayed to stdout.

SYNTAX:

restool dpbp create [OPTIONS]

OPTIONS:

--container= *<container_name>*

Specifies the parent container name. e.g. dprc.2, dprc.3 etc.

If it is not specified, the new object will be created under the default dprc.

EXAMPLE:

Create a DPBP:

```
$ restool dpbp create
dpbp.2 is created under dprc.1
```

8.3.3.2.5.4 create command

The **create** command creates a new DPBP. The name/id of the object created is displayed to stdout.

SYNTAX:

restool dpbp create [OPTIONS]

OPTIONS:

--container= *<container_name>*

Specifies the parent container name. e.g. dprc.2, dprc.3 etc.

If it is not specified, the new object will be created under the default dprc.

EXAMPLE:

Create a DPBP under container dprc.3:

```
$ restool dpbp create --container=dprc.3
dpbp.2 is created under dprc.3
```

8.3.3.2.5.5 destroy command

The **destroy** command destroys a DPBP.

SYNTAX:

restool dpbp destroy *<dpbp-object>*

ARGUMENTS :

<dpbp-object>

Specifies which DPBP to destroy.

EXAMPLE:

```
$ restool dpbp destroy dpbp.2
dpbp.2 is destroyed
```

8.3.3.2.6 DPCON Commands

text

8.3.3.2.6.1 help command

The **help** command displays usage information for the DPCON object.

SYNTAX:

restool dpcon help

ARGUMENTS:

none

EXAMPLE:

```
$ restool dpcon help
usage: restool dpcon <command> [--help][ARGS…]
Where <command> can be:
info - displays detailed information about a DPCON object.
create - creates a DPCON under the root DPRC
destroy - destroys a DPCON under the root DPRC

For command-specific help, use the --help option available for each command.
```

8.3.3.2.6.2 info command

The **info** command displays detailed information about a specific dpcon object.

SYNTAX:

restool dpcon info *<dpcon-object>* [**--verbose**]

ARGUMENTS :

<dpcon-object>

Specifies which dpcon object to show detailed info for. The dpcon-object argument is

a string specifying the object name—e.g. “dpcon.8”.

--verbose

Shows extended/verbose information about the object

EXAMPLE:

```
$ restool dpcon info dpcon.1
dpcon version: 2.0
dpcon id: 1
plugged state: plugged
qbman channel id to be used by dequeue operation: 40
number of priorities for the DPCON channel: 8
```

8.3.3.2.6.3 create command

The **create** command creates a new DPCON. The name/id of the object created is displayed to stdout.

SYNTAX:

restool dpcon create [OPTIONS]

OPTIONS :

--num-priorities=*<number>*

Specifies the number of priorities, valid values are 1-8. Default is 1.

EXAMPLE:

Create a DPCON with 4 priorities:

```
$ restool dpcon create --num-priorites=4
dpcon.8 is created under dprc.1
```

8.3.3.2.6.4 create command

The **create** command creates a new DPCON. The name/id of the object created is displayed to stdout.

SYNTAX:

restool dpcon create [OPTIONS]

OPTIONS :

--num-priorities=*<number>*

Specifies the number of priorities, valid values are 1-8. Default is 1.

--container=*<container_name>*

Specifies the parent container name. e.g. dprc.2, dprc.3 etc.

If it is not specified, the new object will be created under the default dprc.

EXAMPLE:

Create a DPCON with 4 priorities:

```
$ restool dpcon create --num-priorites=4
dpcon.8 is created under dprc.1
```

8.3.3.2.6.5 destroy command

The **destroy** command destroys a DPCON.

SYNTAX:

restool dpcon destroy *<dpcon-object>*

ARGUMENTS :

<dpcon-object>

Specifies which DPCON to destroy.

EXAMPLE:

```
$ restool dpcon destroy dpcon.9
```

dpcon.9 is destroyed

8.3.3.2.7 DPCI Commands

8.3.3.2.7.1 help command

The **help** command displays usage information for the DPCI object.

SYNTAX:

restool dpci help

ARGUMENTS:

none

EXAMPLE:

```
$ restool dpci help
usage: restool dpci <command> [--help][ARGS…]
Where <command> can be:
info - displays detailed information about a DPCI object.
create - creates a DPCI under the root DPRC
destroy - destroys a DPCI under the root DPRC

For command-specific help, use the --help option available for each command.
```

8.3.3.2.7.2 info command

The **info** command displays detailed information about a specific dpci object.

SYNTAX:

restool dpci info *<dpci-object>* [**--verbose**]

ARGUMENTS :

<dpci-object>

Specifies which dpci object to show detailed info for. The dpci-object argument is a

string specifying the object name—e.g. “dpci.8”.

--verbose

Shows extended/verbose information about the object

EXAMPLE:

```
$ restool dpci info dpci.1
dpci version: 2.0
dpci id: 1
plugged state: plugged
num_of_priorities: 2
connected peer: dpci.4
peer's num_of_priorities: 2
link status: 0 - down
```

8.3.3.2.7.3 create command

The **create** command creates a new DPCI. The name/id of the object created is displayed to stdout.

SYNTAX:

restool dpci create [OPTIONS]

OPTIONS :

--num-priorities=*<number>*

Specifies the number of priorities, valid values are 1 or 2. Default is 1.

EXAMPLE:

Create a DPCI with 4 priorities:

```
$ restool dpci create --num-priorites=2
dpci.8 is created under dprc.1
```

8.3.3.2.7.4 create command

The **create** command creates a new DPCI. The name/id of the object created is displayed to stdout.

SYNTAX:

restool dpci create [OPTIONS]

OPTIONS :

--num-priorities=*<number>*

Specifies the number of priorities, valid values are 1 or 2. Default is 1.

--container=*<container_name>*

Specifies the parent container name. e.g. dprc.2, dprc.3 etc.

If it is not specified, the new object will be created under the default dprc.

EXAMPLE:

Create a DPCI with 4 priorities:

```
$ restool dpci create --num-priorites=2
dpci.8 is created under dprc.1
```

8.3.3.2.7.5 destroy command

The **destroy** command destroys a DPCI.

SYNTAX:

restool dpci destroy *<dpci-object>*

ARGUMENTS :

<dpci-object>

Specifies which DPCI to destroy.

EXAMPLE:

```
$ restool dpci destroy dpci.9
```

dpci.9 is destroyed

8.3.3.2.8 DPSECI Commands

8.3.3.2.8.1 help command

The **help** command displays usage information for the DPSECI object.

SYNTAX:

restool dpseci help

ARGUMENTS:

none

EXAMPLE:

```
$ restool dpseci help
usage: restool dpseci <command> [--help][ARGS…]
Where <command> can be:
info - displays detailed information about a DPSECI object.
create - creates a DPSECI under the root DPRC
destroy - destroys a DPSECI under the root DPRC
For command-specific help, use the --help option available for each command.
```

8.3.3.2.8.2 info command

The **info** command displays detailed information about a specific dpseci object.

SYNTAX:

restool dpseci info *<dpseci-object>* [**--verbose**]

ARGUMENTS :

<dpseci-object>

Specifies which dpseci object to show detailed info for. The dpseci-object argument is

a string specifying the object name—e.g. “dpseci.8”.

--verbose

Shows extended/verbose information about the object

EXAMPLE:

```
$ restool dpseci info dpseci.1
dpseci version: 2.0
dpseci id: 1
plugged state: plugged
number of priorities: 1
dpci id: 1
```

8.3.3.2.8.3 create command

The **create** command creates a new DPSECI. The name/id of the object created is displayed to stdout.

SYNTAX:

restool dpseci create [OPTIONS]

OPTIONS :

--priorities=*<priority1,priority2>*

DPSEC support 2 priorities that can be individually set. Valid values for *<priority1>* and *<priority2>* are 1-8. Default is 1.

EXAMPLE:

Create a DPSECI with 4 priorities:

```
$ restool dpseci create --priorites=2,4
dpseci.9 is created under dprc.1
```

8.3.3.2.8.4 create command

The **create** command creates a new DPSECI. The name/id of the object created is displayed to stdout.

SYNTAX:

restool dpseci create [OPTIONS]

OPTIONS :

--priorities=*<priority1,priority2>*

DPSEC support 2 priorities that can be individually set. Valid values for *<priority1>* and *<priority2>* are 1-8. Default is 1.

--container=*<container_name>*
Specifies the parent container name. e.g. dprc.2, dprc.3 etc.
If it is not specified, the new object will be created under the default dprc.

EXAMPLE:

Create a DPSECI with 4 priorities:

```
$ restool dpseci create --priorites=2,4
dpseci.9 is created under dprc.1
```

8.3.3.2.8.5 destroy command

The **destroy** command destroys a DPSECI.

SYNTAX:

restool dpseci destroy *<dpseci-object>*

ARGUMENTS :

<dpseci-object>

Specifies which DPSECI to destroy.

EXAMPLE:

```
$ restool dpseci destroy dpseci.9
```

dpseci.9 is destroyed

8.3.3.2.9 DPDMUX Commands

8.3.3.2.9.1 help command

The **help** command displays usage information for the DPDMUX object.

SYNTAX:

restool dpdmux help

ARGUMENTS:

none

EXAMPLE:

```
$ restool dpdmux help
usage: restool dpdmux <command> [--help][ARGS…]
```

```
    Where <command> can be:
    info - displays detailed information about a DPDMUX object.
    create - creates a DPDMUX under the root DPRC
    destroy - destroys a DPDMUX under the root DPRC

    For command-specific help, use the --help option available for each command.
```

8.3.3.2.9.2 info command

The **info** command displays detailed information about a specific dpdmux object.

SYNTAX:

restool dpdmux info *<dpdmux-object>* [**--verbose**]

ARGUMENTS :

<dpdmux-object>

Specifies which dpdmux object to show detailed info for. The dpdmux-object

argument is a string specifying the object name—e.g. “dpdmux.2”.

--verbose

Shows extended/verbose information about the object

EXAMPLE:

```
$ restool dpdmux info dpdmux.0
dpdmux version: 4.1
dpdmux id: 0
plugged state: plugged
endpoints:
endpoint state: 0
        interface 0: dpmac.1, link is down
endpoint state: 0
        interface 1: dpni.0, link is down
endpoint state: 0
        interface 2: dpni.1, link is down
dpdmux_attr.options value is: 0x2
        DPDMUX_OPT_BRIDGE_EN
DPDMUX address table method: DPDMUX_METHOD_MAC
DPDMUX manipulation type: DPDMUX_MANIP_NONE
number of interfaces (excluding the uplink interface): 3
DPDMUX frame storage memory size: 0
control interface ID: 0
```

8.3.3.2.9.3 create command

The create command creates a new DPDMUX. The name/id of the object created is displayed to stdout.

SYNTAX:

restool dpdmux create --num-ifs=*<number>* [OPTIONS]

ARGUMENTS :

--num-ifs= *<number>*

Number of virtual interfaces (excluding the uplink interface).

OPTIONS :

--method= *<dmat_method>*

Where *<dmat_method>* defines the method of the DPDMUX address table. A valid value is one of the following:

```
            DPDMUX_METHOD_NONE
            DPDMUX_METHOD_C_VLAN_MAC
            DPDMUX_METHOD_MAC
            DPDMUX_METHOD_C_VLAN
            DPDMUX_METHOD_S_VLAN
```

Default is `DPDMUX_METHOD_C_VLAN_MAC`

--manip= *<manip>*

Where *<manip>* defines the DPDMUX required manipulation operation. A valid value is one of the following:

```
            DPDMUX_MANIP_NONE
```

```
            DPDMUX_MANIP_ADD_REMOVE_S_VLAN
```

Default is DPDMUX_MANIP_NONE

--options= *<options-mask>*

```
            DPDMUX_OPT_BRIDGE_EN
```

Default is 0 (don’t set any options)

--max-dmat-entries= *<number>*

max entries in DPDMUX address table. Default is 64.

--max-mc-groups= *<number>*

Number of multicast groups in DPDMUX table. Default is 32 groups.

EXAMPLE:

Create a DPDMUX with all default options:

```
$ restool dpdmux create --num-ifs=4
    dpdmux.11 is created under dprc.1
```

8.3.3.2.9.4 create command

The create command creates a new DPDMUX. The name/id of the object created is displayed to stdout.

SYNTAX:

restool dpdmux create --num-ifs= *<number>* [OPTIONS]

ARGUMENTS :

--num-ifs= *<number>*

Number of virtual interfaces (excluding the uplink interface).

OPTIONS :

--method= *<dmat_method>*

Where *<dmat_method>* defines the method of the DPDMUX address table. A valid value is one of the following:

```
            DPDMUX_METHOD_NONE
            DPDMUX_METHOD_C_VLAN_MAC
            DPDMUX_METHOD_MAC
            DPDMUX_METHOD_C_VLAN
            DPDMUX_METHOD_S_VLAN
```

Default is `DPDMUX_METHOD_C_VLAN_MAC`

--manip= *<manip>*

Where *<manip>* defines the DPDMUX required manipulation operation. A valid value is one of the following:

```
            DPDMUX_MANIP_NONE
```

```
            DPDMUX_MANIP_ADD_REMOVE_S_VLAN
```

Default is DPDMUX_MANIP_NONE

--options= *<options-mask>*

```
            DPDMUX_OPT_BRIDGE_EN
```

Default is 0 (don’t set any options)

--max-dmat-entries= *<number>*

max entries in DPDMUX address table. Default is 64.

--max-mc-groups= *<number>*

Number of multicast groups in DPDMUX table. Default is 32 groups.

--container= *<container_name>*
Specifies the parent container name. e.g. dprc.2, dprc.3 etc.
If it is not specified, the new object will be created under the default dprc.

EXAMPLE:

Create a DPDMUX with all default options under dprc.2:

```
$ restool dpdmux create --num-ifs=4 --container=dprc.2
    dpdmux.11 is created under dprc.2
```

8.3.3.2.9.5 destroy command

The **destroy** command destroys a DPDMUX.

SYNTAX:

restool dpdmux destroy *<dpdmux-object>*

ARGUMENTS :

<dpdmux-object>

Specifies which DPDMUX to destroy.

EXAMPLE:

```
$ restool dpdmux destr
```

8.3.3.2.10 DPMCP Commands

8.3.3.2.10.1 help command

The **help** command displays usage information for the DPMCP object.

SYNTAX:

restool dpmcp help

ARGUMENTS:

none

EXAMPLE:

```
$ restool dpmcp help
usage: restool dpmcp <command> [--help][ARGS…]
Where <command> can be:
    info - displays detailed information about a DPMCP object.
    create - creates a DPMCP under the root DPRC
    destroy - destroys a DPMCP under the root DPRC

For command-specific help, use the --help option available for each command.
```

8.3.3.2.10.2 info command

The **info** command displays detailed information about a specific dpmcp object.

SYNTAX:

restool dpmcp info *<dpmcp-object>* [**--verbose**]

ARGUMENTS :

<dpmcp-object>

Specifies which dpmcp object to show detailed info for. The dpmcp-object argument

is a string specifying the object name—e.g. “dpmcp.8”.

--verbose

Shows extended/verbose information about the object

EXAMPLE:

```
$ restool dpmcp info dpmcp.5
dpmcp version: 1.0
dpmcp object id/portal id: 5
plugged state: plugged
```

8.3.3.2.10.3 create command

The **create** command creates a new DPMCP. The name/id of the object created is displayed to stdout.

SYNTAX:

restool dpmcp create

EXAMPLE:

Create a DPMCP:

```
$ restool dpmcp create
dpmcp.15 is created under dprc.1
$ restool dpmcp create
MC error: No resource (status 0x8)
// when you see this error, it usually means no free portal available at this time.
```

8.3.3.2.10.4 create command

The **create** command creates a new DPMCP. The name/id of the object created is displayed to stdout.

SYNTAX:

restool dpmcp create [OPTIONS]

--container= *<container_name>*
Specifies the parent container name. e.g. dprc.2, dprc.3 etc.
If it is not specified, the new object will be created under the default dprc.

EXAMPLE:

Create a DPMCP:

```
$ restool dpmcp create
dpmcp.15 is created under dprc.1
$ restool dpmcp create
MC error: No resource (status 0x8)
// when you see this error, it usually means no free portal available at this time.
```

8.3.3.2.10.5 destroy command

The **destroy** command destroys a DPMCP.

SYNTAX:

restool dpmcp destroy *<dpmcp-object>*

ARGUMENTS :

<dpmcp-object>

Specifies which DPMCP to destroy.

EXAMPLE:

```
$ restool dpmcp destroy dpmcp.9
dpmcp.9 is destroyed
```

8.3.3.2.11 DPMAC Commands

8.3.3.2.11.1 help command

The **help** command displays usage information for the DPMAC object.

SYNTAX:

restool dpmac help

ARGUMENTS:

none

EXAMPLE:

```
$ restool dpmac help
usage: restool dpmac <command> [--help][ARGS…]
Where <command> can be:
    info - displays detailed information about a DPMAC object.
    create - creates a DPMAC under the root DPRC
    destroy - destroys a DPMAC under the root DPRC

For command-specific help, use the --help option available for each command.
```

8.3.3.2.11.2 info command

The **info** command displays detailed information about a specific dpmac object.

SYNTAX:

restool dpmac info *<dpmac-object>* [**--verbose**]

ARGUMENTS:

<dpmac-object>

Specifies which dpmac object to show detailed info for. The dpmac-object argument

is a string specifying the object name—e.g. “dpmac.8”.

--verbose

Shows extended/verbose information about the object

EXAMPLE:

```
$ restool dpmac info dpmac.5
dpmcp version: 2.0
dpmac object id/phy id: 5
plugged state: plugged
```

8.3.3.2.11.3 create command

The **create** command creates a new DPMAC. The name/id of the object created is displayed to stdout.

SYNTAX:

restool dpmac create --mac-id= *<number>*

--mac-id= *<number>*

Specifies the mac id.

EXAMPLE:

Create a DPMAC with valid portal id:

```
$ restool dpmac create --mac-id=15
dpmac.15 is created under dprc.1
```

8.3.3.2.11.4 create command

The **create** command creates a new DPMAC. The name/id of the object created is displayed to stdout.

SYNTAX:

restool dpmac create --mac-id= *<number>* [OPTIONS]

--mac-id= *<number>*

Specifies the mac id.

OPTIONS:
--container= *<container_name>*
Specifies the parent container name. e.g. dprc.2, dprc.3 etc.
If it is not specified, the new object will be created under the default dprc.

EXAMPLE:

Create a DPMAC with valid portal id:

```
$ restool dpmac create --mac-id=6
dpmac.6 is created under dprc.1
```

8.3.3.2.11.5 destroy command

The **destroy** command destroys a DPMAC.

SYNTAX:

restool dpmac destroy *<dpmac-object>*

ARGUMENTS :

<dpmac-object>

Specifies which DPMAC to destroy.

EXAMPLE:

```
$ restool dpmac destroy dpmac.9
dpmac.9 is destroyed
```

8.3.3.2.12 DPDCEI Commands

8.3.3.2.12.1 help command

The **help** command displays usage information for the DPDCEI object.

SYNTAX:

restool dpdcei help

ARGUMENTS:

none

EXAMPLE:

```
$ restool dpdcei help
usage: restool dpdcei <command> [--help][ARGS…]
Where <command> can be:
info - displays detailed information about a DPDCEI object.
```

```
    create - creates a DPDCEI under the root DPRC
    destroy - destroys a DPDCEI under the root DPRC

    For command-specific help, use the --help option available for each command.
```

8.3.3.2.12.2 info command

The **info** command displays detailed information about a specific dpdcei object.

SYNTAX:

restool dpdcei info *<dpdcei-object>* [**--verbose**]

ARGUMENTS :

<dpdcei-object>

Specifies which dpdcei object to show detailed info for. The dpdcei-object argument

is a string specifying the object name, e.g. “dpdcei.2”.

--verbose

Shows extended/verbose information about the object

EXAMPLE:

```
    $ restool dpdcei info dpdcei.5
    dpdcei version: 0.0
    dpdcei id: 5
    plugged state: plugged
    DPDCEI engine: DPDCEI_ENGINE_COMPRESSION
```

8.3.3.2.12.3 create command

The **create** command creates a new DPDCEI. The name/id of the object created is displayed to stdout.

SYNTAX:

restool dpdcei create --engine=*<engine>* --priority=*<number>* [OPTIONS]

--engine=*<engine>*

Compression or decompression engine to be selected.

A valid value is one of the following:

```
            DPDCEI_ENGINE_COMPRESSION
```

```
            DPDCEI_ENGINE_DECOMPRESSION
```

--priority=*<number>*

Priority for DCE hardware processing (valid values 1-8)

OPTIONS:
--container=*<container_name>*
Specifies the parent container name. e.g. dprc.2, dprc.3 etc.
If it is not specified, the new object will be created under the default dprc.

EXAMPLE:

Create a DPDCEI:

```
$ restool dpdcei create --engine=DPDCEI_ENGINE_COMPRESSION --priority=2
dpdcei.0 is created under dprc.1
$ restool dpdcei create --engine=DPDCEI_ENGINE_COMPRESSION --priority=3
dpdcei.1 is created under dprc.1
```

8.3.3.2.12.4 destroy command

The **destroy** command destroys a DPDCEI.

SYNTAX:

restool dpdcei destroy *<dpdcei-object>*

ARGUMENTS :

<dpdcei-object>

Specifies which DPDCEI to destroy.

EXAMPLE:

```
$ restool dpdcei destroy dpdcei.9
dpdcei.9 is destroyed
```

8.3.3.2.13 DPAIOP Commands

8.3.3.2.13.1 help command

The **help** command displays usage information for the DPAIOP object.

SYNTAX:

restool dpaiop help

ARGUMENTS:

none

EXAMPLE:

```
$ restool dpaiop help
usage: restool dpaiop <command> [--help][ARGS…]
Where <command> can be:
info - displays detailed information about a DPAIOP object.
create - creates a DPAIOP under the root DPRC
destroy - destroys a DPAIOP under the root DPRC

For command-specific help, use the --help option available for each command.
```

8.3.3.2.13.2 info command

The **info** command displays detailed information about a specific dpaiop object.

SYNTAX:

restool dpaiop info *<dpaiop-object>* [**--verbose**]

ARGUMENTS :

<dpaiop-object>

Specifies which dpaiop object to show detailed info for. The *dpaiop-object* argument

is a string specifying the object name—e.g. “dpaiop.8”.

--verbose

Shows extended/verbose information about the object

EXAMPLE:

```
    $ restool dpaiop info dpaiop.5
```

dpmcp version: 1.0

dpmcp id: 5

plugged state: plugged

dpaiop server layer version: 2.1.3

DPAIOP state: DPAIOP_STATE_RUNNING

8.3.3.2.13.3 create command

The **create** command creates a new DPAIOP. The name/id of the object created is displayed to stdout.

SYNTAX:

restool dpaiop create --aiop-id=*<number>* --aiop-container=*<container-name>*

ARGUMENTS :

--aiop-container=*<container-name>*

Specifies the AIOP container name, e.g. dprc.3, dprc.4, etc.

OPTIONS :

--aiop-id=*<number>*

Specifies the AIOP ID. Currently aiop container could only hold one dpaiop. Valid

number is 0. Default number is 0.

EXAMPLE:

Create a DPAIOP:

```
    $ restool dpaiop create --aiop-id=0 --aiop-container=dprc.3
    dpaiop.0 is created under dprc.3

    $ restool dpaiop create --aiop-container=dprc.3
    dpaiop.0 is created under dprc.3
```

8.3.3.2.13.4 create command

The **create** command creates a new DPAIOP. The name/id of the object created is displayed to stdout.

SYNTAX:

restool dpaiop create --aiop-container=*<container-name>* [OPTIONS]

ARGUMENTS :

--aiop-container= *<container-name>*

Specifies the AIOP container name, e.g. dprc.3, dprc.4, etc.

OPTIONS :

--container= *<container-name>*

Specifies the parent container name. e.g. dprc.2, dprc.3 etc.
If it is not specified, the new object will be created under the default dprc.

EXAMPLE:

Create a DPAIOP:

```
    $ restool dpaiop create --aiop-container=dprc.3
    dpaiop.0 is created under dprc.1
```

Create a DPAIOP as a child object of dprc.2:

```
    $ restool dpaiop create --aiop-container=dprc.3 --container=dprc.2
    dpaiop.0 is created under dprc.2
```

8.3.3.2.13.5 destroy command

The **destroy** command destroys a DPAIOP.

SYNTAX:

restool dpaiop destroy *<dpaiop-object>*

ARGUMENTS :

<dpaiop-object>

Specifies which DPAIOP to destroy.

EXAMPLE:

```
    $ restool dpio destroy dpaiop.9
    dpaiop.9 is destroyed
```

8.3.3.2.14 DPDBG Commands

8.3.3.2.14.1 DPDBG Commands

8.3.3.2.14.1.1 help command

The help command displays usage information for the DPDBG object.

Syntax:

```
restool dpdbg help
```

Arguments:

```
None
```

Example:

```
# restool dpdbg help

Usage: restool dpdbg <command> [--help] [ARGS...]
Where <command> can be:
            help - display all commands informations
            info - displays detailed information about a DPDBG object.
            create - create DPDBG object.
            destroy - destroy DPDBG object.
            dump - displays in MC console information about MC objects or memory usage.
            set - set MC modules on or off.

For command-specific help, use the --help option of each command.
```

8.3.3.2.14.1.2 info command

The info command displays detailed information about the DPDBG object.

Syntax:

```
restool dpdbg info
```

Arguments:

```
none
```

Example:

```
# restool dpdbg info
dpdbg id: 0
plugged state: unplugged
```

8.3.3.2.14.1.3 create command

The create command creates the DPDBG object. The name, id and parent container are displayed to stdout.

Syntax:

```
restool dpdbg create
```

Arguments:

```
none
```

Example:

```
# restool dpdbg create
dpdbg.0 is created under dprc.1
```

8.3.3.2.14.1.4 destroy command

The destroy command destroys the DPDBG object.

Syntax:

```
restool dpdbg destroy
```

Arguments:

```
none
```

Example:

```
# restool dpdbg destroy
dpdbg.0 is destroyed
```

8.3.3.2.14.1.5 dump command

The dump command displays information about MC object and memory modules.

Syntax:

```
restool dpdbg dump --<option=[object]>
```

Arguments:

```
--option=[object]
where <option> can be:
    memory - without other arguments
    object - with object name and id as argument (e.g. dpni.5)
```

Example:

```
Display information about dpni.1:
$ restool dpdbg dump --object=dpni.1
Display information about MC memory:
       $ restool dpdbg dump –memory
```

NOTE

The dumped information is printed in MC log/console.

8.3.3.2.14.1.6 set command

The set command changes a module specification at runtime.

Syntax:

```
restool dpdbg set --<module=state>
```

Arguments:

```
--module=<state>
    where <module> can be:
            console - enable/disable mc_console, state is 1 or 0
            log - enable/disable log printing, state is 1 or 0
            timestamp - enable/disable timestamp printing, state is 1 or 0
            level - change logging level from 0 to 5
            uart - change uart ID of mc console from 0 to 4
            1 = ON, 0 = OFF
```

Example:

```
Set logging off:
           $ restool dpdbg set --log=0
```

```
Change logging level:
          $ restool dpdbg set --level=0
```

8.3.3.2.14.2 DPDBG helper script

8.3.3.2.14.2.1 ls-debug

There is a helper script in restool named ls-debug. This script integrates all restool dpdbg commands except for dpdbg create and dpdbg destroy commands that can be called with restool dpdbg create/destroy.

If you use ls-debug script it verifies if the DPDBG object exist and in case of not it creates it. Also, ls-debug has a –help or -h option (ls-debug -h) that prints the next message:

Usage: `/usr/local/bin/ls-debug [OPTIONS]`

The options are:

```
        -h, --help                      - This message.
        -ts, --timestamp=X     - Enable/Disable timestamp printing, X is ON or OFF
        -c, --console=X          - Enable/Disable printing in UART console, X is ON or OFF
        -l, --log=X                  - Enable/Disable printing in DDR log, X is ON or OF
        -u, --uart=X                - Set UART id of the console, X = [0 - 4], 0 = OFF
        -ll, --level=X              - Set logging level, X = [0 - 5]
                                              - 0: GLOBAL
                                             - 1: DEBUG
                                             - 2: INFO
                                             - 3: WARRNING
                                             - 4: ERROR
                                             - 5: CRITICAL
        -m, mem, --memory   - Dump information about memory modules available
        dpxy.z                          - Dump information about MC respective object
```

Commands examples:

- Commands for create/destroy DPDBG
  - Create the DPDBG object:
    - *restool dpdbg create*
      - singleton object
      - this object can be created only in a root container
  - Destroy the DPDBG object:
    - *restool dpdbg destroy*
- Commands for setting run-time MC parameters:
  - Disable UART console printing:
    - *ls-debug –console=OFF*
    - *ls-debug -c=0*
    - *ls-debug -c=off*
    - *restool dpdbg set –console=0*
  - Enable commands timestamp printing:
    - *ls-debug -ts=on*
    - *ls-debug –timestamp=1*
    - *restool dpdbg set –timestamp=1*

- Enable logging in DDR:
  - *ls-debug –log=1*
  - *ls-debug -l=ON*
  - *restool dpdbg set –log=1*
- Change/Set the UART id of the MC console on 2:
  - *ls-debug --uart=2*
  - *ls-debug -u=2*
  - *restool dpdbg set –uart=2*
- Change/Set logging level to INFO (2):
  - *ls-debug –level=2*
  - *ls-debug -l=2*
  - *restool dpdbg set –level=2*

- Commands for dumping run-time MC information:
  - the dumped information are printed in MC log
  - Dump usage of all memory modules available :
    - *ls-debug –memory*
    - *ls-debug mem*
    - *ls-debug -m*
    - *restool dpdbg dump --memory*
  - Dump information about dpni.1:
    - *ls-debug dpni.1*
    - *restool dpdbg dump –object=dpni.1*

The options above can also be sent sequentially in one command line by using the ls-debug script. Example:

- Set UART id on 2, enable UART console printing, enable logging in DDR, disable commands timestamping, set logging level on INFO, dump dpni.1, disable UART console printing, dump memory, enable UART console printing, enable commands timestamping
  - *ls-debug -u=2 –console=on -l=1 -ts=OFF –level=2 dpni.1 -c=0 mem -c=1 –timestamp=ON*

```
root@localhost:~# ls-debug -u=2 --console=on -l=1 -ts=OFF --level=2 dpni.1 -c=0 mem -
c=1 --timestamp=ON
UART id set to 2
UART console printing ON
DDR log printing ON
Timestamp printing OFF
Log level set to 2
dpni.1 dumped information available in MC log/console
UART console printing OFF
Memory dumped information available in MC log/console
UART console printing ON
Timestamp printing ON
root@localhost:~#
```

Obs:

- DPDBG is a singleton object

- DPDBG can’t be created in a child container, only in root containers
- DPDBG can also be created from MC dpl
- Object dumping is available only for DPNIs for the moment
- Dumped information is printed in MC log

8.3.4 DPAA2 User Manual

DPAA2 is a hardware-level networking architecture found on some NXP SoCs. This section provides technical information on this architecture mainly for software developers.

Click here to access the DPAA2 User Manual PDF.

8.3.5 DPAA2 API Reference Manual

Click here to access the DPAA2 API Reference Manual PDF.

8.3.6 Soft Parser Support

8.3.6.1 Soft Parser Configuration Tool

8.3.6.1.1 Introduction

This is a User Guide for SPC (Soft Parser Configuration) tool. The SPC tool allow users to extend the hard parser's capabilities to support custom protocols that are not supported by the hardware parser.

8.3.6.1.2 Defining a custom protocol

The soft parser tool defines custom protocols using xml files, based on the NetPDL standard. It is important to note that even though the language used in the xml files is based on NetPDL, it doesn't follow its rules strictly; therefore, it is highly recommended to read this document.

XML rules: The xml document follows standard xml rules. The document is composed of several elements. Each element begins with a start tag and can contain attributes or child elements. If the element contains child elements, it must have a corresponding end-tag after them. An element without child elements, must end with a slash (/). Note that element and attribute names are always case sensitive.

In the custom protocol xml these names will not contain capital letters.

Comments always begin with "<!--" and end with "-->"

For example:

```
<element attribute1="value">    <!-- this is a comment -->
<child-element myAttribute="4"/>
</element>
<another-element attribute2="value2"/>
```

8.3.6.1.2.1 The <netpdl> element

The custom protocols document always begins with the `<netpdl>` root element. The end tag of the *`netpdl`* element should appear in the end of the document.

Attributes: No required attributes

Child elements: protocol

For example:

```
<netpdl>
…
</netpdl>
```

8.3.6.1.2.2 The <protocol> element

Each document can define one or more protocols. Every protocol should be defined separately within its own protocol element.

Attributes:

- Name – Required, possible value: string.

Defines a unique name for each protocol.

- Longname – Optional attribute, possible value: string.

Defines the name of the protocol for display purposes.

- Prevproto – Required, possible value: protocol name, the following previous protocols are supported:

The following table lists the protocols supported in the prevproto attribute:

Table 127. Protocols supported in the prevproto attribute

Protocol	Layer
ethernet	2
llc_snap	2
vlan	2
vxlan	2
pppoe	2
mpls	2
arp	2
ip	3
ipv4	3
ipv6	3
gre	3
minencap	3
otherl3*	3
tcp	4
udp	4
ipsec_ah	4
ipsec_esp	4
sctp	4
dccp	4
otherl4*	4

Table continues on the next page...

Table 127. Protocols supported in the prevproto attribute (continued)

Protocol	Layer
gtp	5
esp	5
finalshell	5
otherl5*	5

The prevproto attribute defines the previous protocol. The current custom protocol will be invoked only after the parser encounters the defined previous protocol. In the before section the soft parser will have access to all the fields defined in the previous protocol.

NOTE

* The softparser xml has a somewhat different structure and behavior when otherl3 or otherl4 are defined as the previous protocol. See Section 2.2.1

Child Elements:

Format, execute-code

Example:

```
<protocol name="gtpu" longname="GTP-U" prevproto="#udp">
…
</protocol>
<protocol name="tcpExt" longname="tcp extension" prevproto="#tcp">
…
</protocol>
```

8.3.6.1.2.2.1 Use of "otherl3/otherl4/otherl5" as previous protocols

When otherl3 or otherl4 are defined as previous protocols (in the prevproto attribute of the protocol element) the custom protocol and previous protocol refer to the same position in the frame window. The otherl3 and otherl4 protocols have no defined size or defined fields, they are considered only as entry points for the softparser (or as termination points) and therefore they share the same starting offset with the custom protocol.

Since the otherl3/otherl4 only act as a link to the software parser, and hold no separate header which can be parsed, the before element cannot exist when these protocols are defined as the previous protocol.

8.3.6.1.2.3 The <format> element

The `format` element defines the format of the protocol header.

Attribues: None

Child Elements: Field

8.3.6.1.2.4 The <fields> element

The `fields` element defines the fields of the protocol header.

Attribues: None

Child Elements: Field

8.3.6.1.2.5 The <field> element

The `field` element defines a specific field in the custom protocol.

Attributes:

- Type – Required, possible values: "fixed" (for fields of byte-length size), "bit" (for fields of bit-length size).
- Size – Required, possible values: integer. The size of the field is in bytes.
- Name – Required, possible values: string. Unique name for the field.
- longname – Optional, possible values: string. Defines the name of the field for display purposes.
- Mask - Required only for bit fields, possible values: integer. Defines the specific bits in the current bytes which belong to this field.

The field elements appear one after the other and define the protocol's header frame. The first field begins in the first byte of the custom protocol's frame header, and its size is determined by the size attribute. The following fields follow the following rules:

- A fixed field or a field following a fixed field begins in the next byte which is the previous field's offset + the previous field's size.
- A bit field following a bit field begins in the next byte only if the last bit in the previous field's mask is 1.
- If two fields share the same offset (possible only when both fields are bitfields and the mask of the first field doesn't end with 1), they should have the same value in the size attribute.

Example:

```
<format>
<fields>
<field type="bit"     name="flags"      mask="0xE0" size="1"/>
<field type="bit"     name="pt"           mask="0x80" size="1"/>
<field type="bit"     name="version"  mask="0x07" size="1"/>
<field type="fixed" name="mtype"                          size="1"/>
<field type="fixed" name="length"                          size="2"/>
</fields>
</format
<format>
<fields>
<field type="bit" name="version" mask="0xE0" size="1"/>
<field type="bit" name="pt" mask="0x10" size="1"/>
<field type="bit" name="flags" mask="0x07" size="1"/>
<field type="bit" name="flags1" mask="0x01" size="1"/>
<field type="bit" name="flags2" mask="0x10" size="1"/>
<field type="bit" name="flags3" mask="0x02" size="1"/>
<field type="fixed” name="mtype"      size="1" longname="message type"/>
<field type="fixed” name="length"     size="2" />
</fields>
</format>
The fields will be stored in the following bit offsets in the custom protocols header:
Version – 0-2
Pt         - 3-3
Flags   - 5-7
flags1 – 15-15
flags2 – 19-19
flags3 – 22-22
mtype – 24-31
length – 32-47
```

8.3.6.1.2.6 The <execute-code> element

This section contains all the code which should be executed for this custom protocol once the previous protocol has been reached. This element contains two child elements, `before` and `after`. At least one of the child elements must exist. If both child elements exist, the `before` element must appear before the `after` element.

Attributes: None

Child elements: before and after.

Example:

```
<execute-code>
<before>
…
</before>
<after headersize = "8">
</after>
</execute-code>
```

8.3.6.1.2.7 The <before> element

This section contains code which should be executed once the previous protocol has been encountered but before ensuring that the current frame belongs to the custom protocol. In other words, this code is usually used to confirm that the next frame belongs to the custom protocol and to perform any necessary preparations that are needed before processing the custom protocol header.

When the code in this section is analyzed, the frame window still points to the previous protocol's header and therefore the `$FW` variable still accesses the previous protocol in the `before` sections and the `$headerSize` variable returns the header size of the previous protocol. It is also possible to access specific fields from the previous protocol's header but not from the current protocol.

After the softparser reaches the end of the `before` section, the frame window moves to the custom protocol (as explained in the after section below). If no after element exists, the softparser jumps back to the hardparser at end of the `before` section.

The `before` element may only appear once in the `execute-code` element, and if an `after` element exists, it must appear after the `before` element.

Attributes: none

Child Elements: if, switch, assign, action

> **NOTE**
>
> When the previous protocol is otherl3 or otherl4, the previous protocol and the custom protocol are treated as the same and begin in the same offset in the frame window. Therefore, the before section cannot exist when the previous protocol is otherl3 or otherl4, and only an after element can be defined. See section 2.2.1 for more details.

8.3.6.1.2.8 The <after> element

This section contains the code which should be executed when a frame from the current custom protocol has been encountered. In contrast to the 'before' section, in the 'after' section it is possible to access fields from the current protocol, but not from the previous protocol. In the `after` section, the `$FW` variable accesses the current custom protocol and the `$headerSize` variable returns the header size of the current custom protocol.

After the end of the section, the frame window jumps to the end of the custom protocol's header and the program jumps back to the hardparser.

The `after` element may only appear once in the `execute-code` element, and if a `before` element exists, it must appear before the `after` element.

Attributes:

- headerSize – Optional, possible values: arithmetic expression, default value: calculated according to format element.

The user can define the header size for the custom protocol in this attribute. This information is needed to return to the parser exactly after the custom protocol header. If the header size isn't specified, the SPC assumes that the fields defined in the format element are the only fields in the custom protocol header and calculates the header size according to those fields. The `$headerSize` variable in the `after` section returns the value defined in this attribute (or the value calculated by default if the attribute is missing).

Child Elements: if, switch, assign, action

For example:

```
<protocol name="gtp" prevproto="#udp">
<format>
<fields>
<field type="bit" name="version" mask="0xE0" size="1"/>
</fields>
</format>
<execute-code>
<before>
<assign-variable name="$GPR1" value="udp.dport"/>
<!--ILLEGAL: <assign-variable name="$GPR1" value="version" -->
<assign-variable name="$shimr" value="$headerSize"/>
<!-- shimresult now holds udp's header size -->
</before>
<after headersize="4">
<!--ILLEGAL:<assign-variable name="$GPR1" value="udp.dport"> -->
<assign-variable name="$GPR1" value="version"/>
<assign-variable name="$shimr" value="$headerSize"/>
<!-- shimresult now equals 4-->
</after>
</execute-code>
</protocol>
```

8.3.6.1.2.9 Elements in the before and after sections

This section describes the elements in the `before` and `after` sections.

8.3.6.1.2.9.1 The <assign-variable> element

The `assign-variable` element assigns an expression to a variable.

Attributes:

- name – Required, possible values: RA variables. The name of the variable which will be assigned a value.
- value – Required, possible value: arithmetic expression. The expression assigned to the variable.

Child Elements: None

Example:

<assign-variable name="$shimoffset_2" value="$shimoffset_1+12"/>

8.3.6.1.2.9.1.1 The <if> element

The *if* element makes it possible to execute parts of the code only if certain conditions are met.

Attributes:

- Expr – Required, possible values: logical expression. Defines the condition which should be checked before executing the code.

Child Elements: if-true (required), if-false

Example

```
<if expr="$shimoffset_3==1">
<if-true>
…
</if-true>
<if-false>
```

```
</if-false>
</if>
```

8.3.6.1.2.9.1.1.1 <if-true>

The *if-true* element defines code which should be executed if the expression defined in the 'if' element is true.

Attributes: none

Child elements: If, switch, assign, action (same child elements as in the before/after sections)

8.3.6.1.2.9.1.1.2 <if-false>

The *if-false* element defines code which should be executed if the expression defined in the 'if' element is false.

Attributes: none

Child elements: If, switch, assign, action (same child elements as in the before/after sections)

8.3.6.1.2.9.1.2 The <switch> element

The *switch* element defines an expression and a set of cases with values and code which should be executed if the value equals the expression. Each 'switch' element must have at least one 'case' child element.

Note: Only the code of the first case which matches the expression is executed, the rest of the values will be skipped (in c language terms - a break is automatically added after the code of each case).

Attributes:

- expr – Required, possible values: arithmetic expression.

Defines the value being checked.

Child Elements: Case and Default

Example:

```
<switch expr="$ShimOffset_3+1">
<case value="2">
<assign-variable name="$GPR1[1:1]" value="0"/>
</case>
<case value="3" maxvalue="4">
<assign-variable name="$GPR1[1:1]" value="1"/>
</case>
<default>
<assign-variable name="$GPR1[1:1]" value="2">
</default>
</switch>
```

8.3.6.1.2.9.1.2.1 The <case> element

The `case` element matches a value or range of values against the switch expression.

Attributes:

- value – Required, possible values: Integer. If the value equals the switch expression and no earlier case has been matched, the code in the case element is executed.
- maxvalue – Optional, possible values: Integer. If the switch expression is equals or is larger than value and the expression equals or is smaller than maxvalue, and no earlier case has been matched, the code in the case element is executed.

Child Elements: If, switch, assign, action (same child elements as in the before/after sections).

8.3.6.1.2.9.1.2.2 The <default> element

The `default` element contains code which should be executed if the expression in the switch element wasn't matched by any of the cases.

Attributes: None

Child Elements: If, switch, assign, action (same child elements as in the before/after sections).

8.3.6.1.2.9.1.3 The <action> element

Jumps out of the custom protocol.

Attributes:

- type – Required, possible values: currently only 'exit' is supported for this attribute.
- nextproto – Optional, possible values protocol name. The following tables summarizes the list of available values for this attribute:

Table 128. Possible values for the 'nextproto' attribute

Protocol	Application
ethernet	Jump to ethernet and continue hard parsing
llc_snap	Jump to llc_snap and continue hard parsing
vlan	Jump to vlan and continue hard parsing
vxlan	Jump to vxlan and continue hard parsing
pppoe	Jump to pppoe and continue hard parsing
mpls	Jump to mpls and continue hard parsing
ipv4	Jump to ipv4 and continue hard parsing
ipv6	Jump to ipv6 and continue hard parsing
gre	Jump to gre and continue hard parsing
minencap	Jump to minencap and continue hard parsing
otherl3	Jump to otherl3 and continue hard parsing
tcp	Jump to tcp and continue hard parsing
udp	Jump to udp and continue hard parsing
ipsec_ah	Jump to ipsec and continue hard parsing
ipsec_esp	Jump to ipsec and continue hard parsing
sctp	Jump to sctp and continue hard parsing
dccp	Jump to dccp and continue hard parsing
otherl4	Jump to otherl4 and continue hard parsing
after_ip	Jump to the protocol which should follow the ip protocol. The next protocol is found according to the $nxtHdr field (for details see the table below). The advance attribute cannot be set to 'no' when using this option.
after_ethernet	Jump to the protocol which should follow the ethernet protocol. The next protocol is found according to the $nxtHdr field (for details see the table below). The advance attribute cannot be set to 'no' when using this option.

Table continues on the next page...

Table 128. Possible values for the 'nextproto' attribute (continued)

Protocol	Application
after_tcp	Jump to the protocol which should follow the TCP protocol. The next protocol is found according to the $nxtHdr field (for details see the table below). The advance attribute cannot be set to 'no' when using this option.
after_udp	Jump to the protocol which should follow the UDP protocol. The next protocol is found according to the $nxtHdr field (for details see the table below). The advance attribute cannot be set to 'no' when using this option.
return (default value)	Return to the hard parser. Continue parsing the frame header at the same position where soft parsing started. The advance attribute can not be set to 'yes' when using this option.
none/ end_parse	Finish parsing the frame header, don't return to the hard parser.

Table 129. Next protocol values when nextproto is set to 'after_ethernet'

$nxtHdr value	Next Protocol
0x05DC of less	llc_snap
0x0800	ipv4
0x0806	arp
0x86dd	ipv6
0x8847, 0x8848	mpls
0x8100, 0x88A8,ConfigTPID1,ConfigTPID2	Vlan
0x8864	Pppoe
Other value	otherl3

Table 130. Next protocol value when nextproto is set to 'after_ip'

$nxtHdr value	Next Protocol
4	ipv4
6	tcp
17	udp
33	dccp
41	ipv6
50, 51	ipsec
47	gre
55	minencap
132	sctp
Other value	otherl4

Table 131. Next protocol values when nextproto is set to 'after_tcp' or 'after_udp'

$nxtHdr value	Next Protocol
2123	GTP(GTP-C)
2152	GTP(GTP-U)
3386	GTP(GTP')
4500	ESP
4789	VXLAN
Other value	Otherl5+

- advance – Optional, possible values: "yes", "no". Default value: "yes", unless 'end_parse' or 'return' are set in the nextproto attribute, or in case the nextproto attribute isn't set, in those cases the default value is 'no'.

The attribute specifies whether the parser should move to the next frame header before jumping. This attribute has different meanings in the before and after sections. In the before section the parser will move the FW (frame window) past the previous protocol header until it reach the header of the custom protocol. In the after section the parser will move the FW past the current custom protocol header until it reaches the header of the next protocol. The FW is advanced according to the header size.

Notes:

- The frame window must advance when jumping to 'after_ethernet' or 'after_ip' and therefore the advance attribute cannot be set to 'no' in those cases.
- The frame window cannot advance when returning to the hard parser and therefore the advance attribute cannot be set to 'yes' when nextproto is set to 'return' or not set at all.

Example:

```
<action type="exit" advance = "yes" nextproto="#udp"/>
```

8.3.6.1.3 Expressions

Expressions are constructed of operands and operators. The simplest expression may contain only one operand. Most operators are dyadic, and separate two operands (such as *+, -*) and some operators are monadic and operate only on the operand following them (such as *not*).

8.3.6.1.3.1 Operands

The following operands exist: Numbers, variables, fields, and expressions.

NOTE

All operands are limited to 64 bits (8 bytes).

8.3.6.1.3.1.1 Numbers

Numbers can appear in a decimal (no prefix), binary (begin with 0b), or hexadecimal (begin with 0x) format.

Numbers are always limited to a 64-bit unsigned type. However, some operators are only executed on the 32 LSB of the number. Note that immediate primitive negative numbers are not supported, for examples the number -2 cannot appear in an expression. However, artificial negative value can be created using arithmetic expressions such as 1-3 (which returns 0xfffffffe).

8.3.6.1.3.1.2 Fields

Fields are defined in the protocol's `format` element. There are two ways to access fields, either by typing their name directly or by typing the name of protocol where the field is defined, then the dot character and then the name of the field. In the `before`, section it

is possible only to access fields from the previous protocol and in the `after` section, it is possible only to access the current custom protocol's fields.

NOTE

If the length of the field is longer than 8 bytes we cannot access it. This can be solved either by accessing the frame directly using the $FW variable, or by splitting the field to several shorter fields.

Field example:

```
<protocol name="gtpu" prevproto="#ethernet">
<format>
<fields>
<field type="fixed" name="example" size="2"/>
</fields>
</format>
<execute-code>
<before>
<assign-variable name="$l2r" value="ethernet.type"/>
</before>
<after>
<assign-variable name="$shimOffset_2" value="example"/>  </after>
</execute-code>
</protocol>
```

8.3.6.1.3.1.3 Variables

All variables begin with the `$` prefix, and their name are case insensitive. The following variables exist: Frame window, header size, prevprotoOffset, parameter array, and result array variables.

8.3.6.1.3.1.3.1 Result Array Variables

These variables return specific bytes in the result array.

Accessing the variables:

- $variableName – returns the entire variable
- $variableName[byteOffset:bytesNumber] – Returns the bytesNumber number of bytes in the variable starting from byteOffset. This is useful to access only specific bytes in the variable. In case bytesNumber equals zero, the entire variable is returned starting from byteOffset.

Example: The variable *$actiondescriptor* returns result array bytes 64-71 in the results array. Typing *$actiondescriptor[2:4],* will return result array bytes 66-69, since 66 is in offset 2 of the variable (64 is offset 0) and the size requested is 4. The variable $actiondesciptor[3:0] will return result array bytes 67-71, since 67 is in offset 3 of the variable, and size requested is 0 so the entire variable starting with the specified offset (3) is returned.

Other usage: In addition to expressions, the result array variables can also be used in the left side of the assign-variable elements which modify the result arrays values.

The following results array variables exist:

Table 132.

Variable Name	Bytes referred to in the Result Array
gpr1	0-7
gpr2*	8-15

Table continues on the next page...

Table 132. (continued)

nxthdr	16-17
fafext	18-19
fafflags	20-31
shimoffset_1	32-32
shimoffset_2	33-33
ip_pidoffset	34-34
ethoffset	35-35
llc_snapoffset	36-36
vlantcioffset_1	37-37
vlantcioffset_n	38-38
lastetypeoffset	39-39
pppoeoffset	40-40
mplsoffset_1	41-41
mplsoffset_n	42-42
arpoffset	43-43
ipoffset_1	43-43
ipoffset_n	44-44
minencapoffset	44-44
greoffset	45-45
l4offset	46-46
gtpoffset	47-47
espoffset	47-47
ipsecoffset	47-47
routhdroffset1	48-48
routhdroffset2	49-49
nxthdroffset	50-50

Table continues on the next page...

Table 132. (continued)

fragoffset	51-51
grossrunningsum	52-53
runningsum	54-55
parseerrcode	56-56
softparsectx	57-63
ipv4sa	80-83
ipv4da	84-87
ipv6sa1	80-87
ipv6sa2	88-95
ipv6da1	96-103
ipv6da2	104-111
sperc	112-113
iplength	114-115
routtype	116-116
fdlength	123-125
parseerrstat	127-127

* Note: The $GPR2 variable is used internally by the SPC Soft Parser Tool to calculate complex expression, including checksum operations. This variable shouldn’t be used by the user. Use this variable only if necessary at your own risk.

8.3.6.1.3.1.3.2 Parameter Array

This variable returns data from the parameter array. Since the parameter array is more than 8 bytes long, it is required to specify the specific bytes needed.

Accessing the variable: $PA[byteOffset:byteNumber]. Returns the bytesNumber number of bytes in the parameter array starting from byteOffset.

For example:

In order to access the fifth and sixth bytes (index at PA[4] and PA[5]) in the parameter array, we'll type *$PA[4:2]*

8.3.6.1.3.1.3.3 Header size variables

Returns the header size, or the default header size.

Accessing the variables: $headerSize or $defaultHeaderSize

- In the before section the $headerSize of the previous protocol will be returned and accessing the $defaultHeaderSize is not allowed.

- In the after section the $defaultHeaderSize will return the number of bytes in the custom protocol's format fields. The $headerSize will return the headerSize as defined by the user in the after element. If no headerSize has been defined by the user, the variable will return the same value as the $defaultHeaderSize

8.3.6.1.3.1.3.4 Frame Window

Returns data from the Frame Header. In the before section data is returned starting with the previous protocol's header. In the 'after' section data is returned starting with the custom protocol's header

Accessing the variable: $variableName[bitOffset:bitNumber] – Returns the bitsNumber number of bits in the parameter array starting from bitOffset.

Note: The FW uses similar syntax to the PA and RA variables but accesses specific **bits** instead of bytes.

Examples:

- In order to access the tenth and eleventh bits in the frame array (indexed at FW[9], FW[10]), we'll type *$FW[9:2].*
- In order to access the entire third byte in the frame array we'll type *$FW[16:8].*
- The conditions in the following example are always true since we access the same bits with the FW variable and through the fields.

```
<format>
<fields>
<field type="bit"    name="first" size="1" mask = "0xE0"/>
<field type="bit"    name="second" size="1" mask = "0x1"/>
<field type="bit"    name="third" size="1" mask = "0xF"/>
<field type="fixed" name="fourth" size="2"/>
</fields>
</format>
…
<after>
<if expr = "first==$FW[0:3]" >        … </if>
<if expr = "second==$FW[7:1]" >   … </if>
<if expr = "third==$FW[8:4]" >      … </if>
<if expr = "fourth==$FW[16:16]" > … </if>
</after>
```

8.3.6.1.3.1.3.5 Variable prevprotoOffset

Returns the previous protocol's frame header offset. The variable has the same value in the before and after section, and always refers to the protocol defined in the prevproto attribute of the protocol element.

In the before section the FW's current location is equal to prevProtoOffset, in the after section the FW's current location is equal to prevProtoOffset+headerSize.

Note: This variable is a "shortcut" to the result array, and returns or modifies values taken directly from the RA. The following tables summarizes the RA value returned for each previous protocol.

Table 133.

Previous Protocol	Returned value from RA
Ethernet	$Ethoffset
Gre	$Greoffset

Table continues on the next page...

Table 133. (continued)

ipv4, ipv6	$Ipoffset_n
llc_snap	$Llcsnapoffset
Minencap	$Minencapoffset
Mpls	$mplsoffset_n
Pppoe	$Pppoeoffset
tcp, udp, sctp, dccp, ipsec_ah, ipsec_esp	$L4offset
Vlan	$vlanoffset_n
otherl3, otherl4	$NxtHdrOffset – When the previous protocol is otherl3 or otherl3 the custom protocol and the previous protocol have the same offset. See section 2.2.1

8.3.6.1.3.2 Operators

Many types of operators exist. Operators can receive several operands (usually one or two) or arithmetic or logical value and can return an arithmetic or logical value. An arithmetic value is a number, while a logical value is true or false. The following table describes all the operators and their properties. All dyadic operators (operators which receive two parameters) appear between two operands. All monadic operators appear before an operand.

Table 134. Types of operators

Name	Parameters	Description	Syntax
Greater than	Logical (Arithmetic, Arithmetic)	Checks if the value of the first expression is greater than the second expression	gt
Greater equal	Logical (Arithmetic, Arithmetic)	Checks if the value of the first expression equals or is greater than the second expression	ge
Less than	Logical (Arithmetic, Arithmetic)	Checks if the value of the first expression is less than the second expression	Lt
Less equal	Logical (Arithmetic, Arithmetic)	Checks if the value of the first expression equals or is less than the second expression	le
Equal	Logical (Arithmetic, Arithmetic)	Checks if the two expressions are equal	==
Don't equal	Logical (Arithmetic, Arithmetic)	Checks if the two expressions aren't equal	!=
Logical and	Logical (Logical, Logical)	Checks if both expressions are true	and
Logical or	Logical (Logical, Logical)	Checks if one of the expressions are true	or
Logical not	Logical (Logical)	Returns true if the expression if false and false otherwise	Not
Add	32bit Arithmetic (32bit Arithmetic, 32bit Arithemetic)	Return the sum of the expressions	+
Subtract	32bit Arithmetic (32bit Arithmetic, 32bit Arithemetic)	Return the difference between two expressions (result of subtraction)	-

Table continues on the next page...

Table 134. Types of operators (continued)

Name	Parameters	Description	Syntax
Add carry	16bit Arithmetic (16bit Arithmetic, 16bit Arithemetic)	Return the sum of the two-expression summed with the carry after 32 bit.	Addc
Bitwise or	Arithmetic (Arithmetic, Arithemetic)	Returns the result of a bitwise or operation on the two expressions	bitwor
Bitwise xor	Arithmetic (Arithmetic, Arithemetic)	Returns the result of a bitwise xor operation on the two expressions	bitwxor
Bitwise and	Arithmetic (Arithmetic, Arithemetic)	Returns the result of a bitwise and operation on the two expressions	bitwand
Bitwise not	Arithmetic (Arithmetic)	Returns the result of a bitwise not operation on the expression	bitwnot
Shift left	Arithmetic (Arithmetic, Integer – value up to 64)	Return the left expression shifted left by the right expression	shl
Shift right	Arithmetic (Arithmetic, Integer – value up to 64)	Return the left expression shifted left by the right expression	shl
Concat	Arithmetic (Arithmetic, Variable or Integer)	Special instruction explained below	concat
Checksum	Arithmetic (Arithmetic – value up to 0xffff, Arithmetic – value up to 256, Arithmetic – value up to 256)	Special instruction explained below	checksum

8.3.6.1.3.2.1 The concat operator

The *concat* operator shifts the first argument left and inserts the second argument to its right. The concat operation can be executed on variables or integers. If the second argument is a variable, the first argument is shifted left according to the known size of the variable. The result array variables have constant sizes and the sizes of frame header's fields are set in the custom protocol document or the pdl document.

- If the user accesses only specific bits in the second argument, the first argument is shifted left only by the exact number of bits accessed.
- If the second argument is an integer, the first argument is shifted left by the smallest word size the integer fits in - 16, 32, 48 or 64.

NOTE

The second argument of a concat operation cannot be an expression since the compiler doesn't know at runtime the size of the expression and therefore can't shift the first argument properly. However, for expressions, the `concat` operation can simply be replaced by a shift operation (if the user know the number of bits to shift) and a bitwise or operation. It is still recommended to use concat instead of shift and bitwise left when performing the operation on variables or integers, to keep the final code shorter.

For example, the following if expression is true:

```
<assign-variable name="$shimr" value="2"/>
<assign-variable name="$GPR1[6:2]" value="3"/>
<if expr="1 concat $shimr concat $GPR1[6:2] concat 0x40000 ==
0x102000300040000">
```

8.3.6.1.3.2.2 The checksum operator

The *checksum* operator is a special operator with different behavior and syntax than the rest of the operators. It appears before three operands which have parentheses around them, and thus looks like a function - *checksum(expression, integer, integer).* The first operand defines the initial checksum value, the second operand defines the frame window offset in which to start the checksum (relative to the current frame window location) and the third operand defines the length of the data, in bytes, on which the checksum operation should be calculated. Since it is only possible to access 256 bytes in the Frame Window the last two argument should be smaller or equal to 256. Using these values, the checksum executes the add carry (addc) operation on 2-bytes sized words in the frame window range defined. If the range selected contains an odd number of bytes to be check summed, the last byte is padded on the right with zeros to form a 16-bit word for checksum purposes. The total sum is added to the initial check sum value using another addc operation. Therefore, the first argument which defined the initial sum value must be smaller than 0xffff. The result of the final add operation is returned.

For example:

Suppose, we have the following frame, and the custom protocol starts in the 0xE offset (where 4500 appears).

FFFF FFFF FFFF 0CCB CC0D DDDD 0800 4500 002E 0000 4000 402F 2AA2 1000 0000 FFFE 0001 0308 0900 0000 0000 0000 0000 0000 0000 0000 0000 0000 0000 0000 DA95 36D6 6f15 778c

The following `if` conditions will always be true:

```
<after>
<if expr="checksum(0x30a2,2,7+2) == 0xdaff">
…
<if expr="checksum(0,0,20) == 0xffff">
…
</after>
```

The first checksum operation above performs the following calculation:

0x30a2 + (0x002e add 0x0000 addc 0x4000 addc 0x402f addc 0x2a00)

The second checksum perform the following calculation:

0x0000 + (0x4500 addc 0x002e addc 0x0000 addc 0x4000 addc 0x402f addc 0x2aa2 addc 0x1000 addc 0x0000 addc 0xFFFE addc 0x0001)

Normally any protocol should update the `$runningSum` variable with its calculated checksum. This action should be done on after block section of the execute-code element by using bitwise XOR operation.

Here is an example for the correct `$runningSum` update:

```
<after>
<if expr="checksum(0x30a2,2,7+2) == 0xdaff">
…
<if expr="checksum(0,0,20) == 0xffff">
…
</after>
```

- where 46 in this example is the length of the current custom header

8.3.6.1.3.2.3 Expression priorities

Expressions containing multiple operators perform the operation according to the following rules, in the order they appear below:

1. First operations in parenthesis are performed.
2. Next operations which have a higher priority (see section 3.2.4) are performed.
3. Lastly, if there are several operations with the same priority, they are executed from left to right.

It is recommended to use parentheses when several operators appear in the same expression to make sure they are calculated correctly.

8.3.6.1.3.2.4 Specific operator priorities

If several operators appear in the same expressions without any parentheses separating them, they should be performed in the following order:

1. not, bitwise not, checksum
2. add, subtract, add carry
3. bitwise and, bitwise or, bitwise xor
4. shift right, shift left, concat
5. greater than, greater equal, less than, less equal, equal, not equal
6. and, or

8.3.6.1.3.2.5 Variables size

In most operations, the expression size is limited to 64 bits. However, there are a few exceptions: when shifting variables, the **shift** value must be equal or lower than 64 since there are only 64 bits in an expression.

The **add carry** operation can only be performed on 16bit variables and will always return a 16bit variable. The softparser will report an error if an add carry operation is performed on a constant larger than 16bit but won't be able to recognize a complex expression larger than 16bit, therefore it is the user's responsibility to perform the operation only on 16bit variables.

The **subtract** and **add** operators can only be performed on 32bit variables, and they will only return a 32-bit result. If two 32-bit expressions are added and their result is larger than 32 bits, only the carry will return, such that the returned value is a 32-bit variable. The softparser will report a warning if an add carry operation is performed on a constant larger than 32 bits but won't be able to recognize a complex expression larger than 32 bits.

There is an exception which allows performing add and subtract operations large values. Users can perform these operations with one 64-bit variable and one 32-bit variable and receive a 64-bit result, as long as the operation doesn't modify the 32 most significant bytes. In this case the 64-bit variable must appear on the left side of the operator. Working in this way in **not** recommended and should only be used if there is no other option or if performance is crucial.

For example:

The following if expressions are always true:

```
<if expr="0xffffffff+2 == 0x1">
<if expr="0x123456781+3 == 0x123456784">
The following if expression is false (and shouldn't appear in the xml):
<if expr="3+0x123456781 == 0x123456784">
```

8.3.6.1.3.3 Expression types

There are two main types of expressions: Logical expressions, which return `true` or `false` and arithmetic expressions, which return a numeric result.

8.3.6.1.3.3.1 Logical expressions

Logical expression appears in the expr attribute of the 'if' element.

These expressions always return a true or false value, and therefore they must use at least one logical operator which will separate arithmetic or logical operators.

Examples:

The following are logical expressions -

- (*4==$shimoffset_1 or 5!=$shimoffset_2*)
- *not($ShimOffset_2 ge $ShimOffset_1 or $ShimOffset_1 lt $ShimOffset_2)*

The following are **not** logical expressions -

- *(7 gt 3 and 2+7)*
- *(5 lt 8 or 7)*

8.3.6.1.3.3.2 Arithmetic expressions

Arithmetic expressions always have a numeric result. The can hold a single operand (a number, variable or arithmetic expression), or more than one operands separated by arithmetic operators. Logical operators are not allowed in arithmetic expression.

Arithmetic expressions may appear in the following:

- The value attribute of the assign element.
- The headersize attribute of the after element.
- The expr attribute of the switch element

Examples:

The following are arithmetic expressions:

- *($FW[0:16] + 4)*
- *($shimOffset_1 concat 3)*
- *(3 +7 + 8 + $shimOffset_2)*
- *4*

The following are not arithmetic expression:

4==$shimOffset_2

8.3.6.1.4 FAF – frame attribute flags

FAF support was introduced in DPAA 2.0 and they provide information about parsed frame fields. These flags are populated by the Parser after frame parsing.

In SP for DPAA 2.0 was added the ability to access the FAF directly from FSL extension of NetPDL language.

For more detailed information about each FAF meaning and bit position inside *Parse Results* array, please refer to *DPAA 2.0 Parser Guide*.

8.3.6.1.4.1 Inspect FAF

FAF can be inspected from FSL NetPDL code by using if instruction with attribute *faf* and specify desired FAF name from the list of available FAF names presented below.

All frame attribute flags (HW FAFs and User defined FAFs) can be inspected by the Soft Parser.

```
<if faf="name">
<if-true>
……..
</if-true>
<if-false>
……..
</if-false>
</if>
```

8.3.6.1.4.2 Modify FAF

FAF can be modified by using new *set / reset* instructions introduced in FSL NetPDL for DPAA 2.0. Only user defined flags, can be set or reset by the Soft Parser.

To set a FAF flag use:

```
<set faf="name"/>
```

To reset a FAF flag use:

```
<reset faf="name"/>
```

8.3.6.1.4.2.1 Available FAF attributes names

All available FAF names that can be used in FSL NetPDL as *faf* attributes and their meaning are listed in the following tables:

User defined FAFs:

Can be both set and inspected by the Soft Parser.

Table 135. User defined FAFs attributes and their meaning

custom_0	User Defined Flag 0
custom_1	User Defined Flag 1
custom_2	User Defined Flag 2
custom_3	User Defined Flag 3
custom_4	User Defined Flag 4
custom_5	User Defined Flag 5
custom_6	User Defined Flag 6
custom_7	User Defined Flag 7

Hardware FAFs:

Can only be inspected by the Soft Parser (as they are set by the HW Parser).

Table 136. Hardware FAFs attributes and their meaning

IPv6_route_hdr2_present	Routing header presetn in IPv6 header 2
GTP_primed_detected	GTP Primed was detected
VLAN_prio_detected	VLAN with VID = 0 was detected
PTP_detected	A PTP frame was detected
VxLAN_present	VXLAN was parsed
VxLAN_parsing_error	A VXLAN HXS parsing error was detected
Ethernet_slow_protocol	Ethernet control protocol (MAC DA is 01:80:C2:00:00:00-01:80:C2:00:00:00:FF)
IKE_present	IKE was detected at UDP port 4500
shim_soft_parsing_error	An SXS parsing error was found in the shim shell
parsing_error	A Parsing error was found, the error code is reported in the Parse Result
Ethernet_MAC_present	Ethernet MAC was parsed

Table continues on the next page...

Table 136. Hardware FAFs attributes and their meaning (continued)

Ethernet_unicast	Ethernet MAC DA is Unicast
Ethernet_multicast	Ethernet MAC DA is Multicast
Ethernet_broadcast	Ethernet MAC DA is Broadcast
BPDU_frame	MAC DA is 01:80:C2:00:00:00
FCoE_detected	FC0E frame detected. Ether type is 0x8906 detected
FIP_detected	FCoE initialization protocol detected. Ether type is 0x8914 detected
Ethernet_parsing_error	An Ethernet HXS parsing error was found
LLC_SNAP_present	LLC+SNAP was parsed
unknown_LLC_OUI	(LLC is not AAAA03 or OUI is not zero or Ethernet Length is <= 8)
LLC_SNAP_error	A LLC+SNAP HXS parsing error was found
VLAN_1_present	At least one VLAN was parsed
VLAN_n_present	More than one VLAN was parsed
VLAN_parsing_error	A VLAN HXS parsing error was found
PPPoE_PPP_present	PPPoE+PPP was parsed
PPPoE_PPP_parsing_error	A PPPoE+PPP HXS parsing error was found
MPLS_1_present	At least one MPLS was parsed
MPLS_n_present	More than one MPLS was parsed
MPLS_parsing_error	A MPLS HXS parsing error was found
ARP_present	ARP frame with Ethertype 0x0806
ARP_parsing_error	ARP HXS parsing error was found
L2_unknown_protocol	set when next HXS to be executed is the Other L3 shell
L2_soft_parsing_error	A L2 SXS parsing error was found
IPv4_1_present	IPv4 was parsed as first IP, IPv4 SA IPv4 DA IPv4 Protocol
IPv4_1_unicast	IPv4 was parsed as first IP, IPv4 DA is Unicast
IPv4_1_multicast	IPv4 was parsed as first IP, IPv4 DA is Multicast
IPv4_1_broadcast	IPv4 was parsed as first IP, IPv4 DA is Broadcast
IPv4_n_present	IPv4 was parsed as last IP
IPv4_n_unicast	IPv4 was parsed as last IP, IPv4 DA is Unicast
IPv4_n_multicast	IPv4 was parsed as last IP, IPv4 DA is Multicast
IPv4_n_broadcast	IPv4 was parsed as last IP, IPv4 DA is Broadcast
IPv6_1_present	IPv6 was parsed as first IP, IPv6 SA IPv6 DA IPv6 NextHeader are populated
IPv6_1_unicast	IPv6 was parsed as first IP, IPv6 DA is Unicast
IPv6_1_multicast	IPv6 was parsed as first IP, IPv6 DA is Multicast

Table continues on the next page...

Table 136. Hardware FAFs attributes and their meaning (continued)

IPv6_n_present	IPv6 was parsed as last IP
IPv6_n_unicast	IPv6 was parsed as last IP, IPv6 DA is Unicast
IPv6_n_multicast	IPv6 was parsed as last IP, IPv6 DA is Multicast
IP_1_option_present	IP option present
IP_1_unknown_protocol	not IP/GRE/MINENC/TCP/UDP/IPSec/SCTP/DCCP/ICMP/IGMP/ICMPv6UDP Lite
IP_1_packet_is_fragment	IPv4 “more fragments” flag is set or the “fragment offset” field is non-zero or IPv6 Fragment Extension Header present. IPv6FragOffset is populated.
ip_1_packet_is_initial_fragment	IPv4 “more fragments” flag is set and the “fragment offset” field is 0 or IPv6 Fragment Extension Header present and “fragment offset” field is 0.
IP_1_parsing_error	An IP 1 HXS parsing error was found
IP_n_option_present	IP option present
IP_n_unknown_protocol	not IP/GRE/MINENC/TCP/UDP/IPSec/SCTP/DCCP/ICMP/IGMP/ICMPv6UDP Lite
IP_n_packet_is_fragment	IPv4 “more fragments” flag is set or the “fragment offset” field is non-zero or IPv6 Fragment Extension Header present.
IP_n_packet_is_initial_fragment	IPv4 “more fragments” flag is set and the “fragment offset” field is 0 or IPv6 Fragment Extension Header present and “fragment offset” field is 0.
ICMP_detected	ICMP frame detected, IP Protocol is 1.
IGMP_detected	IGMP frame detected, IP Protocol is 2 .
ICMPv6_detected	ICMPv6 frame detected, IP Protocol is 3A.
UDP_light_detected	UDP light detected, IP Protocol is 136
IP_n_parsing_error	An IP n HXS parsing error was found
Min_encap_present	Min. Encap was parsed, the parsed Original Destination Address replaces the IPv4 Destination Address
Min_encap_s_flag_set	The S flag is set in Min. Encap, the parsed IP Src Address replaces the IPv4 Source Address
Min_encap_parsing_error	A Min. Encap HXS parsing error was found
GRE_present	GRE was parsed
GRE_R_bit_set	RFC1701 R bit set
GRE_parsing_error	An GRE HXS parsing error was found
L3_unknown_protocol	set when next HXS to be executed is the Other L4 shell
L3_soft_parsing_error	A L3 SXS parsing error was found
UDP_present	UDP was parsed
UDP_parsing_error	A UDP HXS parsing error was found
TCP_present	TCP was parsed
TCP_options_present	offset value higher than 5
TCP_control_bits_6_11_Set	one or many of URG, ACK, PSH, RST, SYN, FIN bits are set

Table continues on the next page...

Table 136. Hardware FAFs attributes and their meaning (continued)

TCP_control_bits_3_5_Set	one or many of NS, CWR, ECE bits are set
TCP_parsing_error	A TCP HXS parsing error was found
IPSec_present	IPSec was parsed
IPSec_ESP_found	ESP found
IPSec_AH_found	AH found
IPSec_parsing_error	A IPSec HXS parsing error was found
SCTP_present	SCTP was parsed
SCTP_parsing_error	A SCTP HXS parsing error was found
DCCP_present	DCCP was parsed
DCCP_parsing_error	A DCCP HXS parsing error was found
L4_unknown_protocol	Set when next HXS to be executed is the Other L5+ shell
L4_soft_parsing_error	A L4 SXS parsing error was found
GTP_present	GTP was parsed.
GTP_parsing_error	A GTP HXS parsing error was found
ESP_present	ESP was parsed
ESP_parsing_error	An ESP HXS parsing error was found
iSCSI_detected	iSCSI detected. Port# 860
Capwap_control_detected	A Capwap-control frame was detected. Port# 5246
Capwap_data_detected	A Capwap-data frame was detected. Port# 5247
L5_soft_parsing_error	A L5SXS parsing error was found
IPv6_route_hdr1_present	Routing header present in IPv6 header 1

8.3.6.1.5 Subroutines support

In SP for DPAA 2.0 was added support to create and call subroutines in FSL NetPDL language for code reusability purpose. Passing parameters is not allowed. Currently only a stack depth of one call is supported since this is supported by DPAA 2.0.

8.3.6.1.5.1 Defining a subroutine

A subroutine can be defined by using tag <subroutine> inside <execute-code> tag on the same level with <before> and <after> tags. The name of the subroutine must be specified by using attribute *name*.

```
<subroutine name="sub_name">
<!-- subroutine body -->
……..
</subroutine>
```

A subroutine body can contain all instructions supported the same like <before> and <after> sections but it cannot contain a call to another subroutine because DPAA 2.0 *gosub* instruction allows only one level of call stack.

Multiple subroutines can be defined the only constraint is to have different names.

8.3.6.1.5.2 Calling a subroutine

A subroutine can be called by using the tag <gosub/> in FSL NetPDL language and specify the name of the called subroutine by using attribute *name* inside this tag.

```
<gosub name="sub_name"/>
```

A subroutine can be called anywhere from inside sections <before> and <after>. The calls must substitute a set of several instructions for code reusability purpose.

8.3.6.1.5.3 Example of a subroutine usage

```
<execute-code>
        <before>
        ……..
        <gosub name=" sub_1"/>
        <gosub name="sub_2"/>
        ……..
        </before>
        <after>
             ……..
            <gosub name="sub_2"/>
            ……..
        </after>
    <subroutine name="sub_1">
    <!-- subroutine 1 section -->
    <assign-variable name="$gpr1" value="5"/>
    <gosub name="sub_2"/> <!— warning displayed and gosub is ignored -->
    ……..
    </subroutine>

    <subroutine name="sub_2">
    <!-- subroutine 2 section -->
    <assign-variable name="$gpr1" value="6"/>
    ……..
</subroutine>
</execute-code>
```

8.3.6.1.6 SP Hardware configuration file

The Soft Parser Configuration also requires Hardware related settings. All these hardware configurations must be specified in a separate XML file.

All hardware configurations are optional and in case they are not specified, the system uses default values. The entire hardware configuration XML file is optional and can miss entirely in which case the system uses a set of default values for all necessary hardware settings.

8.3.6.1.6.1 The <spconfig> element

The SP hardware configuration file always begins with the <spconfig> root element.

The end tag of the spconfig element should appear in the end of the document.

Attributes: No required attributes

Child Elements: memorymap, device, parameters

For example:

```
<spconfig>
…
</spconfig >
```

8.3.6.1.6.2 SoC configuration

The SP hardware configuration file defines the SoC attributes.

Element: soc

Attributes:

- name – optional, possible value: string. Specifies the SoC name used to run SP bytecode
- rev – optional, possible value: string. Specifies the SoC revision used

Example:

```
<!-- SP configuration file -->
<!-- optional: this configuration file is optional -->
<spconfig>
        <!-- SoC configuration -->
        <!-- optional -->
        <soc name="LS2088" rev="1.0" />
</spconfig>
```

8.3.6.1.6.3 Memory map configuration

The SP hardware configuration file can define parser memory map. This is optional, and it is used to define how protocols compiled bytecode is loaded in parser memory. This is useful for advanced users and provides full control over the parser bytecode memory.

8.3.6.1.6.3.1 The <memorymap> element

The *memorymap* element is used to encapsulate the entire parser memory map definition for different bytecode sections.

8.3.6.1.6.3.2 The <bytecode> element

The *bytecode* element is used to define all attributes for one bytecode section.

Attributes:

- offset – optional, possible value: numeric.

  Specifies the base address where this bytecode section must be loaded in parser memory.

8.3.6.1.6.3.3 The <load-on-parser> element

The *load-on-parser* element is used to define on which parser this bytecode section must be loaded.

Attributes:

- name – optional, possible value: string.

Specifies the parser where this bytecode section must be loaded

Valid values: *wriop_ingress, wriop_egress, aiop*

8.3.6.1.6.3.4 The <load-protocol> element

The *load-protocol* element is used to define which protocols from the ones defined in NetPDL protocol definition file must be included in this bytecode section.

Attributes:

- name – optional, possible value: string.

Specifies the protocol name to be included in this bytecode section

The protocol name must exist in NetPDL protocol definition file.

8.3.6.1.6.3.5 Example for memory map definition

```
<!-- SP configuration file -->
<!-- optional: this configuration file is optional  -->
<spconfig>

        <!-- optional  -->
        <!-- TODO: not implemented: 1 default bytecode section is used with all protocols -->
        <memorymap>
            <!-- bytecode section  -->
            <bytecode offset="0x40" >

                <!-- load this bytecode section on parsers  -->
                <load-on-parser name="wriop_ingress" />
                <load-on- parser name="wriop_egress" />

                <!-- protocols to be included in this bytecode section  -->
                <load-protocol name="afteth" />
                <load-protocol name="dap" />

            </bytecode>
        </memorymap>

</spconfig>
```

8.3.6.1.6.4 Device configuration

The SP hardware configuration file can define Parser device related settings. This is optional, and it is used to define all specific device parser settings (like what protocols should be enabled on initialization, by default on each parser).

8.3.6.1.6.4.1 The <device> element

The *device* element is used to encapsulate the entire parser device definition for all available parsers.

8.3.6.1.6.4.2 The <parser> element

The *parser* element is used to define all configurations for one parser.

Attributes:

- name – required, possible value: string.

  Specifies the parser for which this device configuration section is intended

  Valid values: wriop_ingress, wriop_egress, aiop_ingress, aiop_egress

8.3.6.1.6.4.3 The <enable-on-init> element

The *enable-on-init* element is used to define which protocols are enabled by default on initialization for current parser.

Attributes:

- protocol – required, possible value: string.

Specifies the protocol name to be enabled by default on initialization

The protocol name must exist in NetPDL protocol definition file.

8.3.6.1.6.4.4 Example to enable protocols

```
<!-- SP configuration file -->
<!-- optional: this configuration file is optional  -->
<spconfig>

        <!-- optional: implicit all protocols are disabled on all parsers -->
        <device>
            <parser name="wriop_ingress">
                <enable-on-init protocol="afteth" />
            </parser>
            <parser name="wriop_egress">
                <enable-on-init protocol="afteth" />
            </parser>
        </device>

</spconfig>
```

8.3.6.1.6.5 SP parameters configuration

The SP hardware configuration file can define parameters passed to SP. This is optional, and it is used to define all the necessary attributes of the parameters passed to SP.

8.3.6.1.6.5.1 The <parameters> element

The *parameters* element is used to encapsulate the entire SP parameters definition.

8.3.6.1.6.5.2 The <parameter> element

The *parameter* element is used to define all attributes for one parameter.

Attributes:

- name – required, possible value: string.Specifies the name of this parameter.
- protocol – required, possible value: string. Specifies the protocol name for which this parameter is intended. The protocol name must exist in NetPDL protocol definition file.
- offset – required, possible value: numeric/string. Specifies the offset in memory of this parameter. In case the keyword '*auto*' is used, the offset is automatically calculated based on the previous parameter offset and size
- size – required, possible value: numeric. Specifies the size in bytes of this parameter.
- value – optional, possible value: numeric. Specifies the default value of this parameter. In case this attribute is missing, then the default value used for this parameter is zero.
- type – optional, possible value: string. Specifies the type of this parameter that define its runtime behavior.

Valid options:

- read-write –used to specify the parameter can be both read and written.
- read-only – used to specify the parameter is read only so cannot be written.

  In case this attribute is missing, then the default value used for this parameter is read-write.

8.3.6.1.7 Tips and recommendations

This chapter lists the recommendations while using the Soft Parser Configuration tool.

8.3.6.1.7.1 Updating important fields

The Soft Parser Configuration Tool allows users to define custom protocols, parse these protocols, and update any needed field. However, the tool does not update fields for the user (besides advancing the frame window– see the explanations on the before/after and action elements).

Therefore, when using the soft parser tool, some fields are left empty unless the user manually updates them. These fields might be needed in later stages to correctly interpret. A list of important fields which should be updated appears in the Parser document, under section 1.5.5 Soft HXS PR Updates. These fields include the `$nxtHdr`, `$Runningsum`, `HXS offsets`, `Last E Type Offset`, and `$nxtHdrOffset` (see table 4.1.3.1). Notice that the `HXS offset`, `$nxtHdr`, and `$nxtHdrOffset` are also used internally by the softparser (see section 5.1.2), therefore these values should be modified carefully. The `$nxtHdr` should be modified only if the custom protocol doesn't jump to 'after_ip'/'after_ethernet' or if the user wants to change the next protocol when jumping to 'after_ip'/'after_ethernet'. The HXS and next header offsets should only be modified in the `after` section or in the `before` section if the parser exits in that section without advancing the frame header.

8.3.6.1.7.2 Refraining from modifying specific fields

Some fields in the RA are used internally by the soft parser and users should not modify these fields in certain conditions:

- `$GPR1` is used to store temporary values in complex operations, and therefore users should refrain from modifying it.
- `$nxtHdr` is used to calculate the next protocol when jumping to 'next_ethernet' or 'next_ip'. Therefore, it should not be modified when `nextproto` equals one of those values.
- `$prevProtoOffset` is used to advance the frame window between the *before* and *after* sections or when using the action element with the advance attribute in the `before` section. Therefore, it shouldn't be modified in the before section, unless softparser exits in that section without advancing the frame window. `$prevProtoOffset` can equal the following RA variables (which also shouldn't be modified in the same context): `$ethoffset`, `$greoffset`, `$ipoffset_n`, `$llc_snapoffset`, `minencapoffset`, `mplsoffset_n`, `pppoeoffset`, `l4offset`, `vlanoffset_n`, and `$nxtHdrOffset`.
- `$nxtHdrOffset` is used to advance the frame window between the `before` and `after` sections or when using the action element with the advance attribute in the `before` section. Therefore, it should not be modified in the `before` section, unless softparser exits in that section without advancing the frame window.

8.3.6.1.7.3 Setting the next protocol

The softparser can be used to add code for an existing protocol or to define an entirely new protocol. When it is used as an extension for an existing protocol and no new frame headers are being parsed, the nextproto attribute of the action element should be set to 'return'. In this case the nextproto attribute can also be left empty since 'return' is the default value. If 'return' is set the soft parser will execute the soft parser code and then the hardware parser will continue parsing at the same position in the frame header where it stopped earlier.

When the soft parser is used for a separate custom protocol with its own header, the hard parser should skip this custom protocol (since it won't recognize it and know how to parse it) and therefore the next protocol should be set to a specific protocol. If the next protocol is unknown the nextproto attribute in the action element can also be set to 'after_ip' or 'after_ethernet', is such cases the next protocol will be determined according to the value in the $nxtHdr field.

For example:

1. If we want to execute softparse code when we parse the ethernet protocol, our code will probably include an action like action below which will appear in the 'before' section:

```
<action type="exit" advance="no" nextproto="return">
```

2. If we want to add a custom protocol after Ethernet and then jump to ipv6 our code will probably include an action like action below which will appear in the 'after' section

```
<action type="exit" advance="yes" nextproto="ipv6">
```

3. If we want to add a custom protocol after Ethernet and we don't know where to jump next our code will probably include an action like the action below which will appear in the 'after' section

```
<action type="exit" advance="yes" nextproto="after_ethernet">
```

8.3.6.1.8 Limitations

This section describes limitations users should consider when working with the Soft Parser Configuration tool.

8.3.6.1.8.1 Complex expressions

The Soft Parser tool has limited abilities and cannot process any expression. Some expressions that contain many operations and parentheses might be too complicated for the Soft Parser. If you receive an error stating that an expression is too complex, you can try simplifying it by splitting it to a few expressions, opening parenthesis, or storing temporary values in the result array variables. ($GPR1 is recommended for storing temporary variables but refrain from storing in $GPR2 which is used internally by the tool.) Notice that the checksum operation is especially prone to participate in expressions that are too complex.

8.3.6.1.8.2 Subroutines: not supported

Subroutines are not yet supported in the NetPDL language although the underlying infrastructure was implemented in SPC Tool for SPA (Soft Parser Assembler). Subroutine support at NetPDL level will be enabled in future versions of SPC Tool.

8.3.6.1.8.3 Enabling protocols at initialization is mandatory

Because there is a limitation in MC related to Networking object API (for network objects DPNI, DPDMUX, DPSW) is not currently supported, this makes it a mandatory operation to enable desired protocols at initialization in the SPC tool by using the tag: *enable-on-init*.

If this step is not performed, no protocol is enabled and defined custom protocols are not usable because, by default, all protocols are disabled on all parsers.

This is an example for a minimal configuration file:

```
<spconfig>
    <device>
        <parser name="wriop_ingress">
            <enable-on-init protocol="protocol_name" />
        </parser>
    </device>
</spconfig>
```

8.3.6.1.9 Running the Soft Parser tool

The Soft Parser Tool should be executed using the `spc` executable file. For information about obtaining `spc` executable, see How to build LSDK with Flexbuild.

The following command line options are relevant for the soft parser:

- `-s <custom_protocol_file>` - required. The file contains the xml with the description of all the custom protocols, as explained in this document.
- `-c <config_file>` - required. Specifies the SP hardware configuration file.
- `-d <pdl_file>` – optional. This file contains information regarding the protocols supported by the hard parser. If this option is missing, then the default pdl file will be used.
- `-i` – optional. Generate intermediate code.
- `-l <level>` – optional. Specify log level. The following choices are valid: none, err, warn, info, dbg1, dbg2, dbg3.

For more information type: `spc --help`

8.3.6.1.10 Output of the SPC tool

The output received after running SPC Tool is a **Soft Parser Blob** (*.spb file). A soft parser blob is a binary file that contains entire configuration required to configure the Soft Parser (custom protocols bytecode and SP hardware configuration).

If the option `-i` is used, then additional files are generated: several levels of intermediate code (*parsed*, *ir*, *code*, *asm*) and *_blob.h* file, which is the entire binary blob information dumped in human readable format as an array of bytes.

8.3.6.2 SPC on DPAA 2.x Based Platforms

8.3.6.2.1 Introduction

This document describes how to apply Soft Parser (SP) configuration on DPAA 2.x based platforms.

Solution overview

The architecture is based on using an offline tool to take in a text-based description of the protocol(s) to be parsed and produce a blob for Management Complex (MC) to load.

Loading of the blob is done at system boot by U-Boot. There is one blob per system and the soft parser sequence(s) can be used on any of the interfaces (physical ports or internal links).

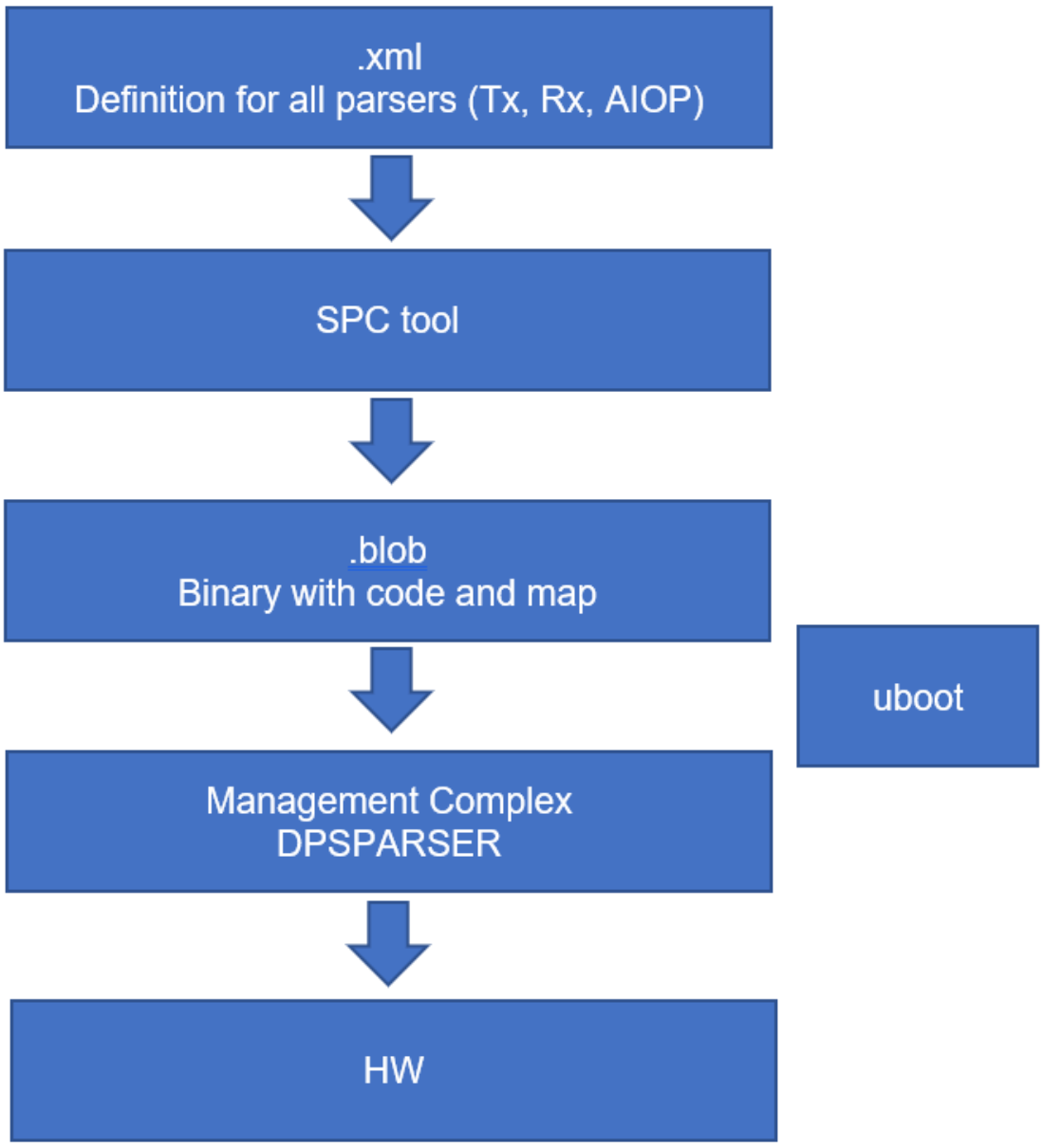

Figure 148. High-level solution overview

A soft parser blob is a binary file that encapsulates the entire configuration required to configure the Soft Parser HW module: custom protocols bytecode, SP protocols configuration, SP parameters, and soft parser hardware configuration. The soft parser blob file is generated by the SPC (Soft Parser Configuration) Tool. MC can be used to apply an SP Blob on hardware by using U-Boot command line.

System Architecture

The high-level architecture for Soft Parser Programming is represented in the following picture with all modules involved and their interaction.

Soft Parser Programming

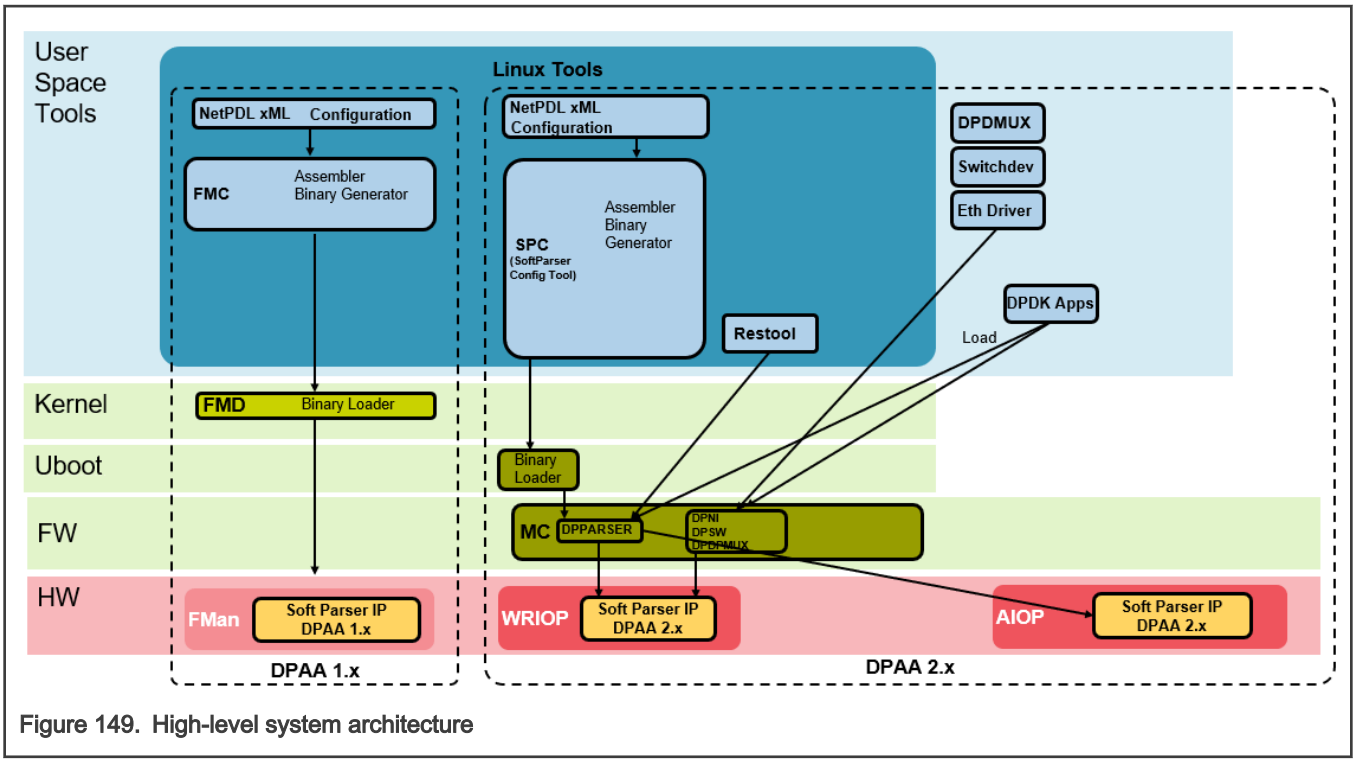

Figure 149. High-level system architecture

The architecture for SP programming on DPAA 2.x was designed to be used in a similar way as it is on DPAA 1.x platforms by taking as input an XML configuration file in NetPDL language.

This architecture is composed from the following modules:

- User space tools:
  - SPC – Soft Parser Configuration Tool
  - Restool
- User applications:
  - DPDK apps
- Binary loader:
  - U-Boot
- Firmware:
  - MC – Management Complex
- Hardware:
  - WRIOP – Soft Parser
  - AIOP – Soft Parser

8.3.6.2.2 Applying Soft Parser Blob on Hardware

In order to apply a Soft Parser Blob on HW, use this command after MC is started:

```
fsl_mc apply spb <blob_address>
```

This command must be used before applying the DPL file (`apply dpl`) command.

Example: `fsl_mc apply spb 0xac000000`

This command will invoke MC to load, parse, verify, and apply configuration from a soft parser blob file.

```
If the blob was applied and the command succeeded, this will be confirmed at command line:
fsl-mc: Applying soft parser blob... SUCCESS

If an error occurred and the command failed, the error will be displayed at command line:
fsl-mc: Applying soft parser blob... FAILED with error code = 1:
BLOB : Magic number does not match

or

fsl-mc: Applying soft parser blob... FAILED with error code = 29:
apply spb : Soft Parser BLOB is already applied
```

After applying Soft Parser Blob the user can apply DPL and boot Linux.

At this point, Soft Parser is configured according to configuration existent in blob applied above and can be used.

After the Linux boot, the interfaces used to receive traffic must be configured from command line.

Optionally the MC console can be checked to verify soft parser actions performed. For this you have to enable log level 'Info' in MC console by using the following option in DPC file:

```
level = "LOG_LEVEL_INFO";
```

```
• verify blob actions performed:

cat /dev/fsl_mc_console | grep BLOB
the log should contain similar line (otherwise the custom protocol is not usable):
[I, DPSPARSER] Soft Parser BLOB parsing : Completed

• verify DPSPARSER actions performed:

cat /dev/fsl_mc_console | grep DPSPARSER
the log should contain similar lines (otherwise the custom protocol is not enabled):
[I, DPSPARSER] Enable system WRIOP INGRESS SPs on PPID 0
[I, DPSPARSER] 'afteth' : HXS = 0x1 PC = 0x20 Parameters = 0
```

The interfaces used must be correctly configured by using `ifconfig` command.

An external traffic generator can be used to create test frames with custom protocols and then inject these frames in configured interfaces. These frames are then processed by the Soft Parser according to configuration applied.

8.3.6.2.3 Limitations

This section describes the limitations users should consider when working with Soft Parser Blob.

- The U-Boot command to load, parse, and apply a soft parser blob SPB file (*'apply spb'*) can be used only before applying the DPL file (*'apply dpl'*) command. Never try to use *'apply spb'* command after *'apply dpl'* command because this action results in an error and SPB configuration will not be applied.
- There is no support to load a soft parser blob (SPB) file from Linux. Currently this action can be performed only from U-Boot.
- Networking object API (for network objects DPNI, DPDMUX, DPSW) is not currently supported (as it is described in architecture document).
- For SPC Tool limitations see Soft Parser Configuration Tool User Guide.

8.3.7 AIOP

8.3.7.1 AIOP Sample Applications

The Advanced I/O Processor (AIOP) hardware, an optional component of the DPAA2 architecture, is a C-programmable engine that enables power efficient packet-oriented processing. This section provides sample applications that can be used to exercise functionality of offloading packet processing in AIOP.

8.3.7.1.1 Creating AIOP Containers

This section describes how to dynamically create Data Path Resource Containers owned by AIOP and how to load AIOP ELF by using AIOP Tool.

cd /usr/aiop/scripts

In this folder there are two scripts based on restool available:

- `dynamic_aiop_only.sh` - script used by reference applications only with AIOP side, not interacting with other components
- `dynamic_aiop_root.sh` - script used by reference applications that interact with Linux Kernel running on GPPS

Scripts do not require any command line argument as input. Sample execution flow is shown below:

```
# ./dynamic_aiop_only.sh
Creating AIOP Container
Assigned dpbp.1 to dprc.2
Assigned dpbp.2 to dprc.2
Assigned dpbp.3 to dprc.2
Assigned dpni.1 to dprc.2
Connecting dpni.1<------->dpmac.1
Assigned dpni.2 to dprc.2
Connecting dpni.2<------->dpmac.2
AIOP Container dprc.2 created
----- Contents of AIOP Container: dprc.2 -----
dprc.2 contains 5 objects:
object          label           plugged-state
dpni.2                          plugged
dpni.1                          plugged
dpbp.3                          plugged
dpbp.2                          plugged
dpbp.1                          plugged
-----
==================================================
Creating AIOP Tool Container
Assigned dpaiop.0 to dprc.3
Assigned dpmcp.22 to dprc.3
AIOP Tool Container dprc.3 created
----- Contents of AIOP Tool Container: dprc.3 -----
dprc.3 contains 2 objects:
object          label           plugged-state
dpaiop.0                        plugged
dpmcp.22                        plugged
-----
==================================================
Performing VFIO mapping for AIOP Tool Container (dprc.3)
Performing vfio mapping for dprc.3
[  796.531485] vfio-fsl-mc dprc.3: Binding with vfio-fsl_mc driver
[  796.540756] vfio-fsl-mc dpaiop.0: Binding with vfio-fsl_mc driver
[  796.547364] vfio-fsl-mc dpmcp.22: Binding with vfio-fsl_mc driver
========== Summary ================================
 AIOP Container: dprc.2
 AIOP Tool Container: dprc.3
==================================================
```

To load the AIOP binary by using AIOP Tool, the AIOP Tool Container is necessary. In the above case is `dprc.3`. The following command should be executed:

```
# aiop_tool load -g dprc.3 -f /usr/aiop/bin/aiop_reflector.elf &
AIOP Image (aiop_reflector.elf) loaded successfully.
```

To ensure that AIOP image is indeed loaded and running, the AIOP console can be checked by executing one of the following commands:

```
# restool dpaiop info dpaiop.0
dpaiop id: 0
dpaiop version: 2.3
plugged state: plugged
dpaiop server layer version: 7.2.0
DPAIOP state: DPAIOP_STATE_RUNNING

root@ls2085ardb:~# cat /dev/fsl_aiop_console
        . . .
```

8.3.7.1.2 AIOP Packet Reflector Application

8.3.7.1.2.1 AIOP Packet Reflector Overview

This section demonstrates a simple application data path on the AIOP.

The application performs the following functions:

- Configure the fields used for the initial order scope hash generation. The fields are: the source address, the destination address, the protocol type fields from the IP header and the source port and the destination port from the L4 header. For every packet received by WRIOP a hashed Initial Ordering Scope (IOS) will be generated based on these values.
- Set Concurrent Execution (XC) as the initial packets processing mode. In the initial stage of processing, the packets are processed concurrently by many cores in their ordering scope.
- Drop non IPv4 packets.
- Switch the source and destination MAC and IP addresses of the received packets.
- Transition into Exclusive execution (XX) in order to restore packet order. This is optional and can be deactivated through define EXCLUSIVE_MODE
- Reflect back the packet on the same interface from which it was received.

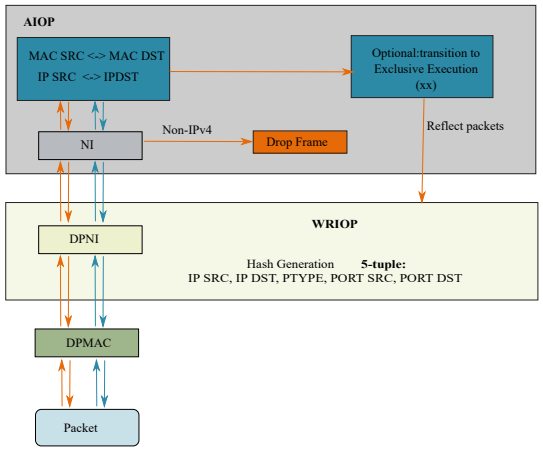

Figure 150. AIOP Packet Reflector overview

8.3.7.1.2.2 Running the Reflector Application

The ELF for AIOP reflector is `/usr/aiop/bin/aiop_reflector.elf`. This can be loaded via AIOP Tool as section Creating AIOP Containers describes. For this application the script `dynamic_aiop_only.sh` must be executed before loading the image:

```
# ./dynamic_aiop_only.sh
```

To load the AIOP Reflector Application, execute the following command:

```
# aiop_tool load -g dprc.3 -f /usr/aiop/bin/aiop_reflector.elf &
```

To check if the AIOP Reflector Application loaded successfully, execute the following command in the Linux command shell:

```
# cat /dev/fsl_aiop_console | grep REFLECTOR
```

The command output should display information about the Network Interfaces (NIs) that were successfully configured: NI instance (e.g. NI 0) together with the associated MAC address.

```
REFLECTOR : Successfully configured ni0 (dpni.2)
REFLECTOR : dpni.2 <---connected---> dpmac.2 (MAC addr: 00:00:00:00:00:07)
REFLECTOR : Successfully configured ni1 (dpni.1)
REFLECTOR : dpni.1 <---connected---> dpmac.1 (MAC addr: 00:00:00:00:00:06)
```

NOTE

Although the AIOP container contains multiple three DPNIs (DPNI6, DPNI7 and DPNI10), the AIOP Reflector will use only the DPNIs that have a DPMAC as endpoint (on which it can succesfully configure the order scope). The others will be skipped in application initialization.

During frame processing, the AIOP Logger will print the following brief information about every reflected packet:

- AIOP Core number on which the frame was processed
- Received MAC source and destination addresses
- Received IP source and destination addresses

```
# busybox tail -f /dev/fsl_aiop_console
```

```
RX on NI 0 | CORE:15
      MAC_SA: 00-10-94-00-00-02 MAC_DA: 00-00-00-00-00-06
      IP_SRC: 192.85.1.1 IP_DST: 192.0.0.1

RX on NI 0 | CORE:14
      MAC_SA: 00-10-94-00-00-02 MAC_DA: 00-00-00-00-00-06
      IP_SRC: 192.85.1.2 IP_DST: 192.0.0.1

 . . .

RX on NI 0 | CORE:9
      MAC_SA: 00-10-94-00-00-02 MAC_DA: 00-00-00-00-00-06
      IP_SRC: 192.85.1.3 IP_DST: 192.0.0.1
```

8.3.7.1.2.3 Generating Traffic to Test AIOP Reflector Application

An external traffic source is needed to pass traffic to the reflector application. This could be another RDB or some other traffic generator. Two optical 10G ports need to be connected to MAC1 and MAC2 of RDB-1.

The following graphic illustrates how traffic moves from a packet generator to RDB-1 board

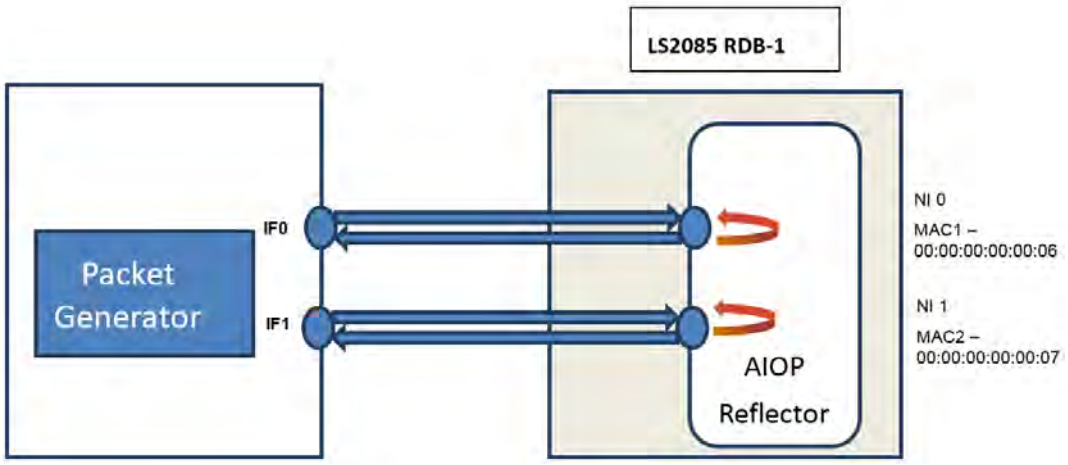

Figure 151. Generating traffic for AIOP Packet Reflector

When using a Packet Generator to inject traffic, connect one port of the packet generator to MAC1 of RDB-1 and a second port to MAC2 of RDB-1.

On RDB-1 ensure that both AIOP network interfaces are in link up state:

```
$ cat /dev/fsl_aiop_console | grep REFLECTOR
REFLECTOR : ni0 link is UP
REFLECTOR : ni1 link is UP
```

Generate an IPv4 frames for each of the two ports:

```
        MAC source:         ANY
        MAC destination:    00:00:00:00:00:06 for MAC1
                            00:00:00:00:00:07 for MAC2
        IP source:          ANY
        IP destination:     ANY
```

On RDB-1, the AIOP Logger will print a brief information about every frame that is being reflected.

8.3.7.1.3 AIOP Packet Classifier Application

8.3.7.1.3.1 AIOP Packet Classifier Overview

The purpose of this sample application is to demonstrate how to perform a simple Classification on the AIOP. The application will apply a Classification criteria for every IPv4 frame and will reflect back only accepted frames.

There are three execution modes listed below:

- Exclusive execution (XX): This mode forces atomic processing of packets. Each packet is processed in order of its arrival before the next packet is processed.
- Concurrent execution (XC): This mode processes packets within a flow concurrently on the AIOP. Packets may become misordered as part of this parallel processing. To restore packet order, the data path transitions to exclusive execution mode before transmitting the forwarded packets.
- Unordered. In this mode, packet ordering is not considered and concurrent packet processing takes place.

The application performs the following functions:

- Put network interfaces in promiscuous mode in order to allow packet reception regardless of its MAC destination address.
- Configure the fields used for the initial order scope hash generation. The fields are: the source address, the destination address, the protocol type fields from the IP header and the source port and the destination port from the L4 header. For every packet received by WRIOP a hashed Initial Ordering Scope (IOS) will be generated based on these values.
  - Set Concurrent Execution (XC) as the initial packets processing mode. In the initial stage of processing, the packets are processed concurrently by many cores in their ordering scope.
  - Classify the packets to enable different processing modes to be run based on the type of traffic. Classification is based on the following fields: IPv4 source and destination addresses, Protocol number, Source and Destination Layer 4 ports. The packets processing mode is selected as a result of the classification as follows:
  - TCP packets are processed in exclusive execution mode (XX)
  - UDP packets are processed in concurrent execution mode (XC). In order to keep the UDP packets in order, the application must transition to exclusive execution mode before sending packets to the destination port.
  - SCTP packets are processed with no respect regarding their arrival order (Unordered).
  - The packets not matching the classification criteria are dropped.

In order to determine the processing mode in which a packet should be processed, when a lookup hit is obtained, the lookup result will return the new processing mode to which the application should transition

- Switch the source and destination MAC and IP addresses of the received packets.

Reflect back the accepted packets on the same interface from which they were received

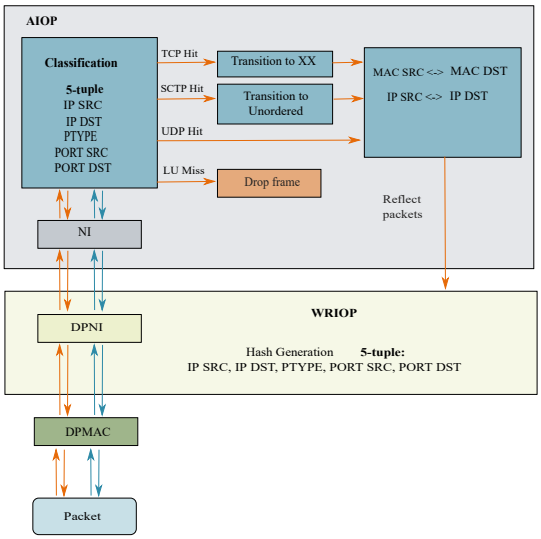

Figure 152. AIOP Packet Classifier overview

The Exact Match table in AIOP that will be used for table lookup will be populated with the following entries:

IP Source Address	IP Destination Address	Protocol Type	Source Port	Destination Port
198.20.1.1	198.19.1.0	6 (TCP)	1024	1025
198.20.1.1	198.19.1.64	17 (UDP)	1024	1025
198.20.1.1	198.19.1.128	132 (SCTP)	1024	1025

For each entry in the table a mask with value 0xE0 is applied on the last byte of the IP Destination address, allowing a number of 32 IP Destination Address to be received. The following traffic flows will generate a HIT in the Classification table:

IP Source Address	IP Destination Address	Protocol Type	Source Port	Destination Port
198.20.1.1	198.19.1.0 .. 198.19.1.31	6 (TCP)	1024	1025
198.20.1.1	198.19.1.64 .. 198.19.1.95	17 (UDP)	1024	1025
198.20.1.1	198.19.1.128 .. 198.19.1.159	132 (SCTP)	1024	1025

8.3.7.1.3.2 Running the Classifier Application

The classifier application should be run on the RDB-1 system.

The ELF for AIOP Classifier is `/usr/aiop/bin/aiop_classifier.elf`. This can be loaded via AIOP tool as section Creating AIOP Containers describes. For this application the script `dynamic_aiop_only.sh` must be executed before loading the image:

```
# ./dynamic_aiop_only.sh
```

To load the AIOP Classifier Application, execute the following command:

```
# aiop_tool load -g dprc.3 -f /usr/aiop/bin/aiop_classifier.elf &
```

To check if the AIOP Classifier Application loaded successfully, execute the following command in the Linux command shell:

```
# cat /dev/fsl_aiop_console | grep CLASSIFIER
```

The command output should display information about the Network Interfaces (NIs) that were successfully configured: NI instance (e.g NI 0) together with the associated MAC address.

```
CLASSIFIER : Successfully configured exact table match
CLASSIFIER : Successfully configured ni0 (dpni.2)
CLASSIFIER : dpni.2 <---connected---> dpmac.2 (MAC addr: 00:00:00:00:00:07)
CLASSIFIER : Successfully configured ni1 (dpni.1)
CLASSIFIER : dpni.1 <---connected---> dpmac.1 (MAC addr: 00:00:00:00:00:06)
```

NOTE

Although the AIOP container contains multiple NIs the AIOP Reflector will use only the NIs that have a DPMAC as endpoint (on which it can succesfully configure the order scope).

During frame processing, the AIOP Logger will print the following brief information about every reflected packet:

- AIOP Core number on which the frame was processed
- Received MAC source and destination addresses
- Received IP source and destination addresses

```
# busybox tail –f /dev/fsl_aiop_console

RX on NI 0 | CORE:15
   MAC_SA: 00-10-94-00-00-02 MAC_DA: 00-00-00-00-00-06
   IP_SRC: 198.20.1.1 IP_DST: 198.19.1.0

RX on NI 0 | CORE:14
   MAC_SA: 00-10-94-00-00-02 MAC_DA: 00-00-00-00-00-06
   IP_SRC: 198.20.1.1 IP_DST: 198.19.1.64

. . .

RX on NI 1 | CORE:9
   MAC_SA: 00-10-94-00-00-02 MAC_DA: 00-00-00-00-00-07
   IP_SRC: 198.20.1.1 IP_DST: 198.19.1.128
```

8.3.7.1.3.3 Generating Traffic to Test AIOP Classifier Application

An external traffic source is needed to pass traffic to the classifier application. This could be another RDB or some other traffic generator. Two optical 10G ports need to be connected to MAC1 and MAC2 of RDB-1.

The following graphic illustrates how traffic moves from a packet generator to RDB-1 board.

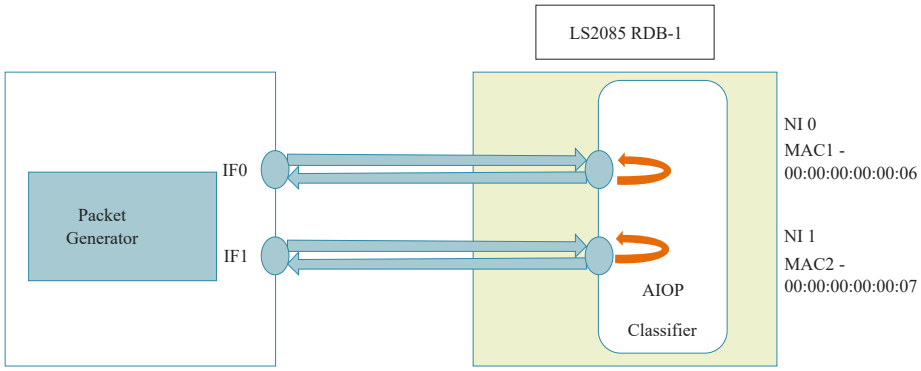

Figure 153. Generating traffic for AIOP Classifier

When using a Packet Generator to inject traffic, connect one port of the packet generator to MAC1 of RDB-1 and a second port to MAC2 of RDB-1.

On RDB-1 ensure that both AIOP network interfaces are in link up state:

```
$ cat /dev/fsl_aiop_console | grep CLASSIFIER
...
CLASSIFIER : ni0 link is UP
CLASSIFIER : ni1 link is UP
```

Generate IPv4 frames for each of the two ports:

- MAC source: ANY
- MAC destination: ANY
- For IP & Layer 4, the accepted values are show in the following table:

IP Source Address	IP Destination Address	Protocol Type	Source Port	Destination Port
198.20.1.1	198.19.1.0 .. 198.19.1.31	6 (TCP)	1024	1025
198.20.1.1	198.19.1.64 .. 198.19.1.95	17 (UDP)	1024	1025
198.20.1.1	198.19.1.128 .. 198.19.1.159	132 (SCTP)	1024	1025

The AIOP Logger will print a brief information about every frame that passed the Classification criteria.

NOTE

Traffic can be generated using frames available in the provided classifier.pcap file. The traffic available is shown in the table below.

IP Source Address	IP Destination Address	Protocol Type	Source Port	Destination Port
198.20.1.1	198.19.1.0 .. 198.19.1.63	6 (TCP)	1024	1025
198.20.1.1	198.19.1.64 .. 198.19.1.127	17 (UDP)	1024	1025
198.20.1.1	198.19.1.128 .. 198.19.1.191	132 (SCTP)	1024	1025

This file can be used to generate the traffic from a traffic generator (e.g.: a packet generator or another RDB board). Location on board for this file, after bringup, is in `/usr/aiop/traffic_files/classifier.pcap`. On RDB-1, the AIOP Reflector Classifier Application will drop half of the frames in each range as a result of classification look-up miss.

8.3.7.1.4 AIOP Control Flow Application

8.3.7.1.4.1 AIOP Control Flow Overview

The purpose of this sample application is to demonstrate a simple AIOP-GPP communication using a DPNI-DPNI connection. The application filters ICMP and ARP request frames and sends them to GPP where Linux Kernel replies with ICMP Echo Reply and ARP Response.

Application has the following required connections:

- DPNI to DPNI connection: a network interface from AIOP that provides connection to another network interface on GPP
- DPNI to DPMAC connection: a network interface from AIOP connected to external traffic (physical wired connection, e.g. XFI or SGMII as links)

The application performs the following functions:

Initialization:

All network interfaces are in promiscuous mode.

Depending on a network interface's' connected endpoint object type, there are two different frame processing callbacks.

NOTE

Failures in performing the above actions lead to dropping the packets received on that network interface or in no link between AIOP and GPP.

Runtime

For every packet received on AIOP network interface connected to external traffic:

- Drop non IPv4 packets and non ARP packets

- Detect, using Parser, if packets received are either ICMP Echo Request or ARP Request. In this case send packets to Linux Kernel using GPP connection
- For ARP or IPv4 packets other than ICMP Echo Request and ARP Request: switch the source and destination MAC and IP addresses of the received packets and reflect back the packet on the same interface from which it was received.

For every packet received from GPP:

- Drop all packets that are not ICMP Echo Reply and not ARP response
- Print brief information about the accepted packets
- Forward ICMP Echo Reply and ARP response packets to the NI havingconnected to traffic generatorDPMAC as endpoint and callback config and callback configured.

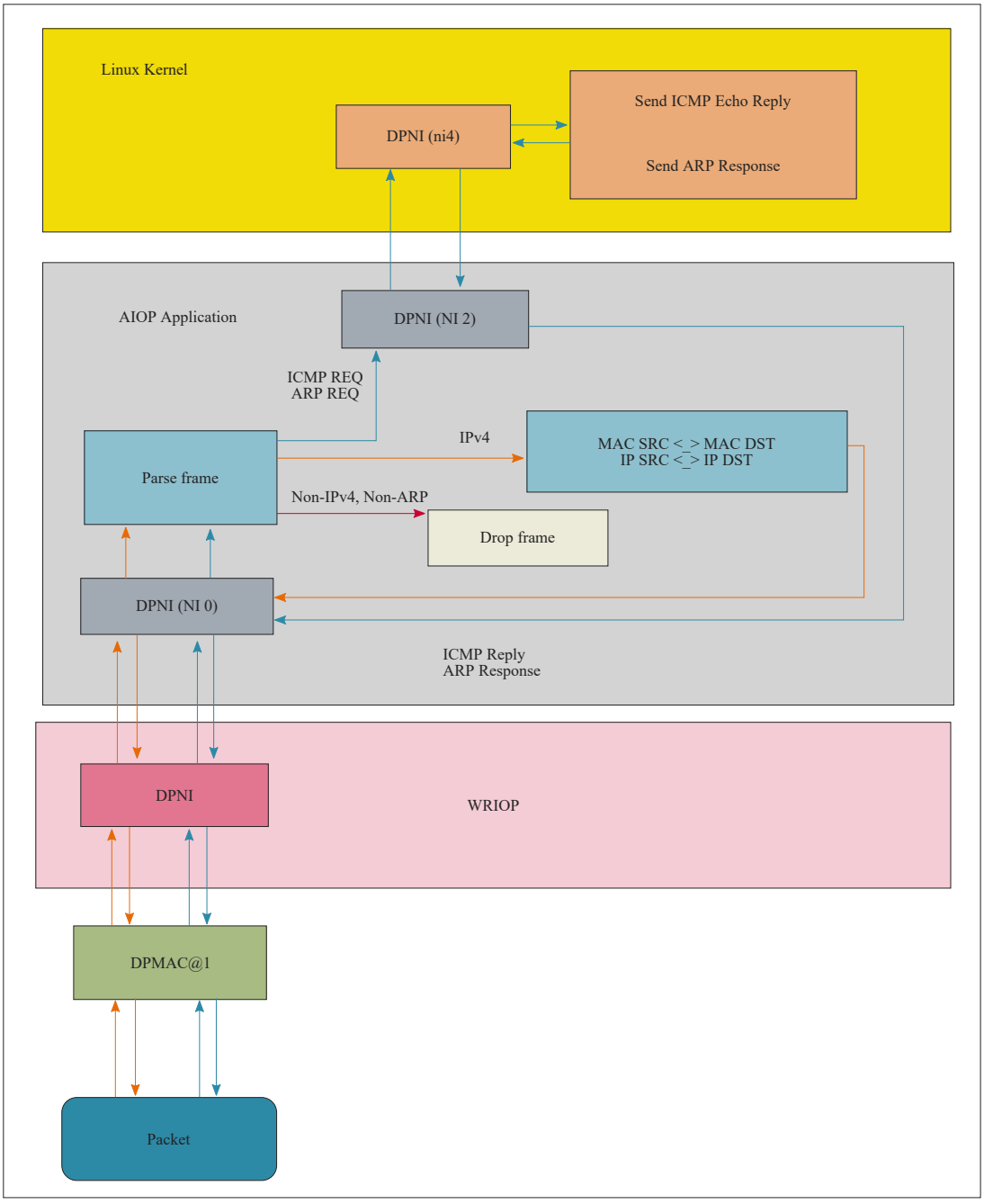

Figure 154. AIOP Control Flow overview

8.3.7.1.4.2 Running the Control Flow Application

The ELF for AIOP Classifier is `/usr/aiop/bin/aiop_control_flow.elf`. This can be loaded via AIOP tool as section Creating AIOP Containers describes. For this application the script `dynamic_aiop_root.sh` must be executed before loading the image:

```
# ./dynamic_aiop_root.sh
```

To load the AIOP Classifier Application, execute the following command:

```
# aiop_tool load -g dprc.3 -f /usr/aiop/bin/aiop_control_flow.elf &
```

To check if AIOP Control Flow Application loaded successfully execute the following command in the Linux command shell:

```
$ cat /dev/fsl_aiop_console | grep CONTROL_FLOW
```

The command output should display the number of NIs that were successfully configured together with the specific MAC addresses that are provided to the AIOP Control Flow Application:

```
CONTROL_FLOW : Successfully configured ni0 (dpni.2)
CONTROL_FLOW : dpni.2 <---connected---> dpni.0
CONTROL_FLOW : Successfully configured ni1 (dpni.1)
CONTROL_FLOW : dpni.1 <---connected---> dpmac.1 (MAC addr: 00:00:00:00:00:06)
```

On RDB board, to enable AIOP-GPP communication via DPNI-DPNI, it is required to configure the Linux network interface:

```
# ip link set dev ni0 down
# ip addr flush dev ni0
# ip addr add 6.6.6.1/8 dev ni0
# ip link set dev ni0 up
```

After executing the commands for configuring Linux network interface, in AIOP console will be displayed a message for the NI 0 (DPNI 2) link up due to a DPNI link event:

```
CONTROL_FLOW : ni0 link is UP
```

It is also required to create a static entry in the ARP table, so that Linux responds directly to AIOP:

```
# arp -s 6.6.6.10 <MAC_address_of_traffic_generator>
# arp -n
Address     HWtype     HWaddress                              Flags Mask     Iface
6.6.6.10    ether      <MAC_address_of_traffic_generator>     CM             ni4
```

During frame processing, the AIOP Logger will print the following brief information about every received packet on all interfaces:

- Received MAC source and destination addresses
- Received IP source and destination addresses
- Traffic generator IP address is 6.6.6.10
- For ARP Frames AIOP Logger will print: operation code (OPCODE), Sender and Target Protocol Address.
- For ICMP Frames AIOP Logger will print: ICMP Type and ICMP Code.

```
RX on NI 0
   MAC_SA: 00-00-00-00-00-02 MAC_DA: 02-00-c0-a8-48-01
   IP_SRC: 6.6.6.10 IP_DST: 6.6.6.1
   ICMP_TYPE: 8 ICMP_CODE: 0

RX on NI 0
```

```
   MAC_SA: 00-00-00-00-00-02 MAC_DA: 02-00-c0-a8-48-01
   ARP_OPCODE: 1 S_ADDR: 6.6.6.10 T_ADDR: 6.6.6.1

RX on NI 0
   MAC_SA: 00-00-00-00-00-06 MAC_DA: 00-10-94-00-00-10
   IP_SRC: 192.0.0.1 IP_DST: 192.85.1.2

. . .
```

Assign an IP address to the Linux interface for SSH connections to RDB-1 board, for example using the following command:

```
# ip addr add 192.168.1.20/24 dev eth0
# ip link set dev eth0 up
```

Alternatively, if the DHCP server is active on the network, run following command to get an IP address automatically, for example using the following command:

```
# udhcpc -i eth0
```

8.3.7.1.4.3 Generating Traffic to Test AIOP Control Flow Application

An external traffic source is needed to pass traffic to the control flow application. This could be another RDB or some other traffic generator. The following graphic illustrates traffic flow between Packet Generator and RDB board.

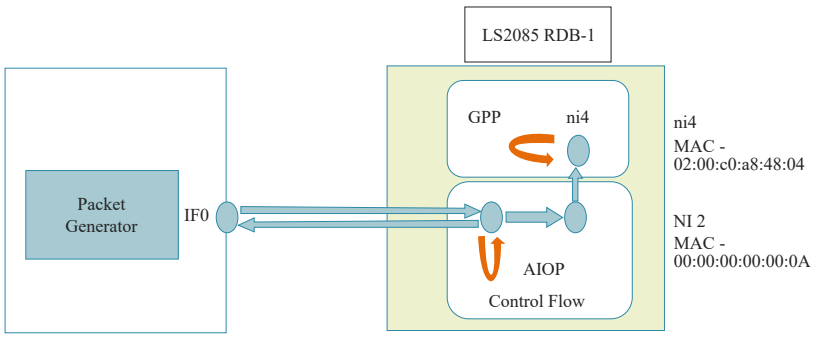

Figure 155. Generating traffic for AIOP Control Flow

When using a Packet Generator to inject traffic, connect one port of the packet generator to MAC1 of RDB-1.

Generate IPv4 frames for each of the two ports:

- MAC source: 00:00:00:00:00:02 (MAC address of the traffic generator)
- MAC destination: 02:00:C0:A8:48:00 (MAC of ni0 in Linux)
- For ARP and ICMP, the values that are sent to Linux GPP are:

IP Source Address	IP Destination Address	Protocol Type	ICMP Type	ICMP Code
6.6.6.10	6.6.6.1	01 (ICMP)	08 (Echo Request)	00

For other ICMP fields use any value:

Protocol Type	Sender Hardware Address	Sender Protocol Address	Target Hardware Address	Target Protocol Address
00 01 (ARP Request)	<<MAC Address of Traffic Generator>>	6.6.6.10	00:00:00:00:00:00	6.6.6.1

- For TCP or UDP use any data in IP source/destination and header specific.

Traffic can be injected in board only after the network interface connected to trafficgenerator (external traffic) is up due to internal event in AIOP:

```
CONTROL_FLOW : ni0 link is UP
```

Open two AIOP consoles (using SSH). On one of them show the AIOP Logger using command described below. When injecting traffic, on RDB-1, the AIOP Logger will print a brief information about every frame that is being processed.

```
$ busybox tail -f /dev/fsl_aiop_console
```

On the other console start packet capture, using the following command, to sniff communication between AIOP and GPP:

```
$ tcpdump -i ni1 -w aiop_control_flow.pcap
```

8.3.7.1.5 AIOP Header Manipulation Application

8.3.7.1.5.1 AIOP Header Manipulation Overview

The purpose of this application is to demonstrate how to perform a simple GRE tunneling using header manipulation operations available in AIOP. Application offers support only for IPv4 packets and requires one DPNI interface, acting as tunnel interface. The packet header content is used to determine the type of operation to be performed on the packet: encapsulation or decapsulation

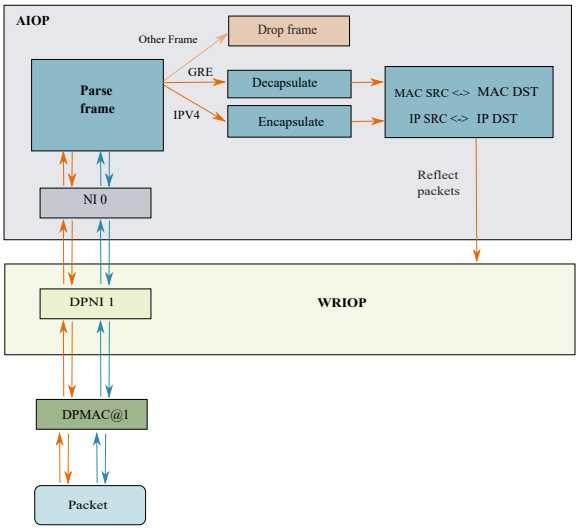

Figure 156. AIOP Header Manipulation overview

The application performs the following operations:

- For regular IPv4 packets without inner IP header: creates a basic IP header, computes outer IP checksum, creates a basic GRE header (all flags 0, GRE version 0, encapsulated protocol: IPv4), inserts these headers between ETH and IP headers and switches the source and destination MAC addresses
- For packets having an inner IP and GRE headers: deletes the outer IP and GRE headers, switches the source and destination MAC and IP addresses
- Discards non-IPv4 and non-GRE packets
- Re-runs parser and prints the packet after header manipulation occurred. This is optional and can be deactivated by defining the macro RERUN_PARSER
- Sends back packets on same network interface they were received from.

8.3.7.1.5.2 Running the Header Manipulation application

The ELF for AIOP Classifier is `/usr/aiop/bin/aiop_header_manip.elf`. This can be loaded via AIOP tool as described in Creating AIOP Containers. For this application the script `dynamic_aiop_only.sh` must be executed before loading the image:

```
# ./dynamic_aiop_only.sh
```

To load the AIOP Classifier Application, execute the following command:

```
# aiop_tool load -g dprc.3 -f /usr/aiop/bin/aiop_header_manip.elf &
```

To check if the AIOP Classifier Application loaded successfully, execute the following command in the Linux command shell:

```
# cat /dev/fsl_aiop_console | grep HEADER_MANIP
```

The command output should display information about the Network Interfaces (NIs) that were successfully configured: NI instance (e.g ni0) together with the associated MAC address.

```
HEADER_MANIP : Successfully configured ni0 (dpni.6)
HEADER_MANIP : dpni.6 <---connected---> dpmac.1 (MAC addr: 00:00:00:00:00:06)
```

NOTE

Although the AIOP container contains multiple NIs the AIOP Reflector will use only the NIs that have a DPMAC as endpoint (on which it can succesfully configure the order scope).

During packet processing, the AIOP Logger prints the following brief information about every received packet on all interfaces:

- Received IP source and destination addresses (for the inner header and for the outer IP header in case packet is encapsulated)
- GRE Flags, version and encapsulated protocol, in case the packet is encapsulated.

If parser re-running was enabled the information above is printed, in order to show the result of encapsulation/decapsulation header manipulation operations performed.

```
# busybox tail -f /dev/fsl_aiop_console

Decapsulated Frame | FD Len 124 | SEG Len 124
  OUTER IP HEADER
    PROTO: 1 IP_SRC: 192.168.1.10, IP_DST: 10.171.77.121, TOTAL LEN: 110, IHL: 20

Encapsulated Frame | FD Len 148 | SEG Len 124
  OUTER IP HEADER
    PROTO: 47 IP_SRC: 122.122.122.122, IP_DST: 138.138.138.138, TOTAL LEN: 134, IHL: 20
  Generic Routing Encapsulation
    FLAGS: 0x00000, VERSION: 0x000, PTYPTE: 0x0800
```

```
  INNER IP HEADER
    PROTO: 1 IP_SRC: 192.168.1.10, IP_DST: 10.171.77.121, TOTAL LEN: 110, IHL: 20

Encapsulated Frame | FD Len 148 | SEG Len 128
  OUTER IP HEADER
    PROTO: 47 IP_SRC: 10.8.8.8, IP_DST: 10.7.7.7, TOTAL LEN: 134, IHL: 20
  Generic Routing Encapsulation
    FLAGS: 0x00000, VERSION: 0x000, PTYPTE: 0x0800
  INNER IP HEADER
    PROTO: 6 IP_SRC: 198.168.2.21, IP_DST: 10.18.1.1, TOTAL LEN: 106, IHL: 20

Decapsulated Frame | FD Len 120 | SEG Len 120
  OUTER IP HEADER
    PROTO: 6 IP_SRC: 10.18.1.1, IP_DST: 198.168.2.21, TOTAL LEN: 106, IHL: 20
```

8.3.7.1.5.3 Generating Traffic to Test AIOP Header Manipulation Application

An external traffic source is needed to pass traffic to the classifier application. This could be another RDB or some other traffic generator. One optical 10G ports need to be connected to MAC1 or MAC2 of RDB-1.

The following diagram illustrates how traffic moves from a packet generator to RDB-1 board.

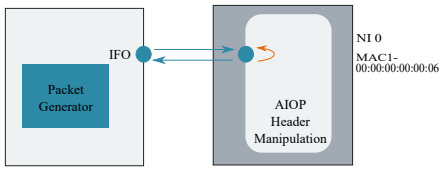

Figure 157. Generating traffic for AIOP Header Manipulation

When using a Packet Generator to inject traffic, connect one port of the packet generator to MAC1 of RDB-1.

On RDB-1 ensure that both AIOP network interface is in link up state:

```
$ cat /dev/fsl_aiop_console | grep HEADER_MANIP
HEADER_MANIP: NI 0 link is UP
```

Generate IPv4 packets:

- Common values:
  - MAC destination: 00:00:00:00:00:06 (address of MAC1)
  - MAC source: ANY
  - Outer IP source: ANY
  - Outer IP destination: ANY
- For GRE encapsulated packets:
  - Version: 0
  - GRE Flags and version: 0x0000
  - GRE Encapsulated Protocol: 0x0800 (IP)
  - Inner IP source: ANY
  - Inner IP destination: ANY

On RDB-1, the AIOP Logger prints brief information about every packet that is being encapsulated/decapsulated and if parser re-running is enabled the AIOP Logger prints brief information about the packet after the GRE encapsulation/decapsulation header manipulations occurred.

The encapsulated packets using GRE by AIOP application have the following pre-defined values:

- Outer IP Version: 4
- Outer IP source: 122.122.122.122
- Outer IP destination: 138.138.138.138
- GRE Version: 0
- GRE Flags and version: 0x0000
- GRE Protocol Type: 0x0800 (IP)
- Inner IP source: IP source from original packet
- Inner IP destination: IP destination from original packet

The packets that were decapsulated by AIOP will have the inner IP source and destination addresses and MAC addresses swapped.

8.3.7.1.6 AIOP Statistics Application

8.3.7.1.6.1 AIOP Statistics Overview

The purpose of this application is to demonstrate the usage of the AIOP atomic operations in order to update software definedstatistics counters. There are two types of statistics counters:

- Global: total number of the received packets, total number of the received bytes , total number of the accepted packets, total number of the rejected packets
- Per-flow: total number of the recived packets and total number of the received bytes, for each packet matching the applied classification criteria

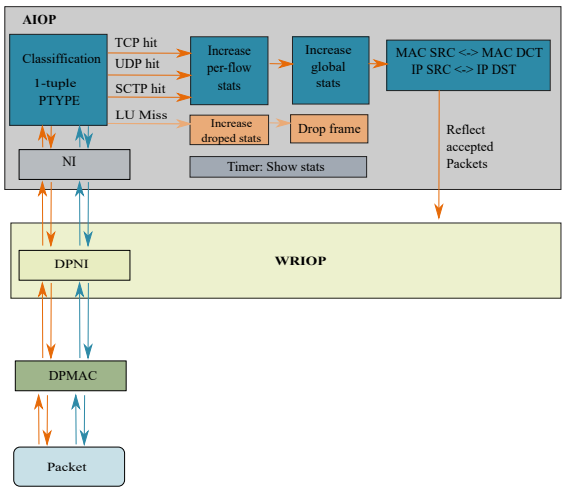

Figure 158. AIOP Statistics overview

The application performs the following operations:

- Classifies the packets to enable different counters update. Classification is based only on the Protocol Number field. Only the TCP, UDP and SCTP protocols are accepted. The packets not matching the classification criteria are dropped and number of dropped packets is increased. [GI1]

- Increases the global statistics and the statistics for each packet matching the classification criteria (per-flow statistics).
- Swap the MAC and IP addresses
- Sends back packets on same network interface they were received from.
- By default, the global and per flow statistics are displayed at every 60 seconds. In order achieve this, a timer is used. The timer time interval, measured in seconds, can be changed by setting the value of the macro definition APP_TMAN_TIMER_DURATION, at compile time.

Note: Both global and per-flow statistics are stored in the DP-DDR (Data Path DDR) memory partition. For the global statistics, a contiguous block of memory is obtained and for each flow a buffer from DP-DDR is obtained by using pool-based allocation.

8.3.7.1.6.2 Running the AIOP Statistics Application

The statistics application should be run on the RDB-1 system.

The ELF for AIOP reflector is `/usr/aiop/bin/aiop_statistics.elf`. This can be loaded via AIOP tool as section Creating AIOP Containers describes. For this application the script `dynamic_aiop_only.sh` must be executed before loading the image:

```
# ./dynamic_aiop_only.sh
```

To load the AIOP Statistics Application, execute the following command:

```
# aiop_tool load -g dprc.3 -f /usr/aiop/bin/aiop_statistics.elf &
```

To check if the AIOP Statistics Application loaded successfully, execute the following command in the Linux command shell:

```
# cat /dev/fsl_aiop_console | grep STATISTICS
```

The command output should display information about the Network Interfaces (NIs) that were successfully configured: NI instance (e.g ni0) together with the associated MAC address.

```
STATISTICS : Created TMI id=0x2
STATISTICS : Created timer for showing statistics, handle=0x102
STATISTICS : Application initialized successfully
STATISTICS : Successfully configured ni0 (dpni.2)
STATISTICS : dpni.2 <---connected---> dpmac.2 (MAC addr: 00:00:00:00:00:07)
STATISTICS : Successfully configured ni1 (dpni.1)
STATISTICS : dpni.1 <---connected---> dpmac.1 (MAC addr: 00:00:00:00:00:06)
STATISTICS : ni1 link is UP
```

Once the application started, at every 60 seconds (or at the time interval defined by APP_TMAN_TIMER_DURATION macro) the AIOP Logger prints all statistics counters values. Default value should be 0 for all counters.

```
AIOP received 47753801 packets (5921471324 bytes)
        12585359 dropped packets, 35168442 accepted packets, 35168442 transmitted packets
         * PROTO=0x6: received: 12601479 packets (1562583396 bytes)
         * PROTO=0x11: received: 12608080 packets (1563401920 bytes)
         * PROTO=0x84: received: 9958883 packets (1234901492 bytes)
```

8.3.7.1.6.3 Generating Traffic to Test AIOP Statistics Application

An external traffic source is needed to inject packets into the application. This could be another RDB-1 or some other traffic generator. One optical 10G port needs to be connected to MAC1 or MAC2 port of the RDB

The following diagram illustrates how traffic moves from a packet generator to RDB-1 board.

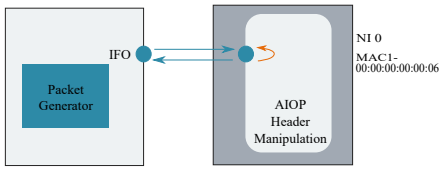

Figure 159. Generating traffic for AIOP Statistics

When using a Packet Generator to inject traffic, connect one port of the packet generator to MAC1 of RDB-1 and a second port to MAC2 of RDB-1.

On RDB-1 ensure that both AIOP network interfaces are in link up state:

```
$ cat /dev/fsl_aiop_console | grep STATISTICS
STATISTICS : NI 0 link is UP
```

Generate IPv4 frames for each of the two ports:

- MAC source: ANY
- MAC destination: 00:00:00:00:00:06 (address of MAC1)
- For IP & Layer 4, the accepted values are show in the following table:

IP Source Address	IP Destination Address	Protocol Type	Source Port	Destination Port
ANY	ANY	6 (TCP)	ANY	ANY
ANY	ANY	17 (UDP)	ANY	ANY
ANY	ANY	132 (SCTP)	ANY	ANY

On RDB-1, the AIOP Logger prints at every 60 seconds (or at the time interval configured with the APP_TMAN_TIMER_DURATION macro) the global statistics and the per-flow statistics for each matched protocol (TCP, UDP and SCTP).

8.3.7.1.7 AIOP QoS_demo Application

8.3.7.1.7.1 AIOP QoS_demo Overview

The purpose of this sample application is to demonstrate how to use the QoS features on the AIOP. The application is a basic reflector: a received frame is sent back unchanged on the same dpni.

The application performs the following functions:

- For dpni0, it doesn’t enable QoS features
- Configures QoS features on dpni1 for ingress (classification, prioritization, policing) and egress (traffic shaping)
- Traffic is classified in 4 classes: TCP is TC0, UDP is TC1, SCTP is TC2, all the rest of traffic goes to TC7
- The priorities of the traffic classes are set as follows: TC0 has high priority 0, TC1 has high priority 1, TC2 has medium priority, TC7 has lowest priority
- The policer is configured to discard TC2 traffic
- The tx rate limit is set to 100 Mbps
- Prints information about the received frame (interface id, traffic class, protocols)

- Reflects back the frame on the same interface from which it was received

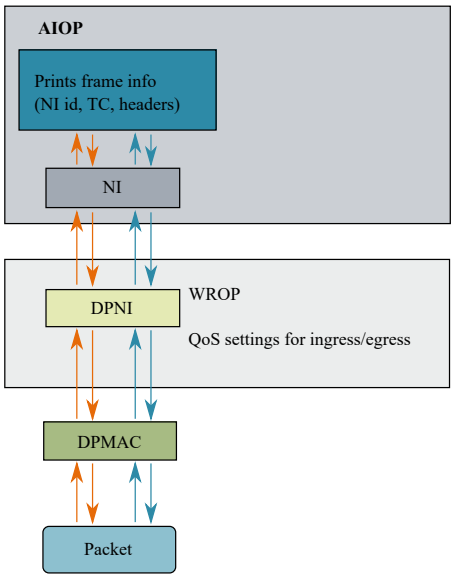

Figure 160. AIOP qos_demo Overview

8.3.7.1.7.2 Running the QoS_demo Application

The qos_demo should be run on the RDB-1 system.

The ELF for AIOP QoS_demo is `/usr/aiop/bin/ aiop_qos_demo.elf`. This can be loaded via AIOP tool as section Creating AIOP Containers describes. For this application, the script `dynamic_aiop_only.sh` must be executed before loading the image:

```
# ./dynamic_aiop_only.sh
```

To load the AIOP QoS_demo, execute the following command:

```
# aiop_tool load -g dprc.3 -f /usr/aiop/bin/ aiop_qos_demo.elf &
```

To check if the AIOP QoS_demo Application loaded successfully, execute the following command in the LS2088 Linux command shell:

```
# cat /dev/fsl_aiop_console | grep QoS_demo
```

The command output should display information about the Network Interfaces (NIs) that were successfully configured: NI instance (e.g NI 0) together with the associated MAC address.

```
QoS_demo : Successfully configured exact table match
QoS_demo : Successfully configured ni0 (dpni.2)
QoS_demo : dpni.2 <---connected---> dpmac.2 (MAC addr: 00:00:00:00:00:07)
QoS_demo : Successfully configured ni1 (dpni.1)
QoS_demo : dpni.1 <---connected---> dpmac.1 (MAC addr: 00:00:00:00:00:06)
```

During frame processing, the AIOP Logger will print the following brief information about every reflected packet:

- NI id on which the frame was processed
- AIOP Core number on which the task executes

- Traffic class for the incoming frame
- Header information

```
# busybox tail -f /dev/fsl_aiop_console

QoS_demo: RX on NI 1 | CORE:0 | TC = 7 | ARP | unknown

QoS_demo: RX on NI 1 | CORE:0 | TC = 7 | IPv4 | ICMP

QoS_demo: RX on NI 1 | CORE:0 | TC = 0 | IPv4 | TCP

QoS_demo: RX on NI 1 | CORE:0 | TC = 1 | IPv4 | UDP

QoS_demo: RX on NI 0 | CORE:0 | TC = 0 | ARP | unknown

QoS_demo: RX on NI 0 | CORE:0 | TC = 0 | IPv4 | ICMP

QoS_demo: RX on NI 0 | CORE:0 | TC = 0 | IPv4 | TCP

QoS_demo: RX on NI 0 | CORE:0 | TC = 0 | IPv4 | UDP

QoS_demo: RX on NI 0 | CORE:0 | TC = 0 | IPv4 | SCTP
```

8.3.7.1.7.3 Generating traffic to test AIOP QoS_demo Application

An external traffic source is needed to pass traffic to the qos_demo application. This could be another RDB or some other traffic generator. Two optical 10G ports need to be connected to MAC1 and MAC2 of RDB-1.The following graphic illustrates how traffic moves from a packet generator to RDB-1 board.

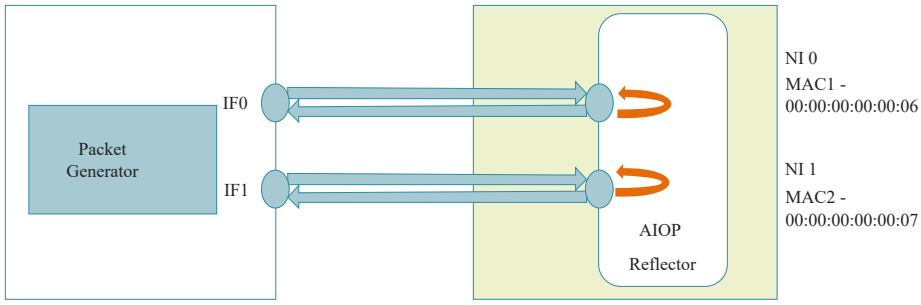

Figure 161. Generating Traffic for AIOP qos_demo

When using a Packet Generator to inject traffic, connect one port of the packet generator to MAC1 of RDB-1 and a second port to MAC2 of RDB-1.

On RDB-1 ensure that both AIOP network interfaces are in link up state:

```
$ cat /dev/fsl_aiop_console | grep QoS_demo
QoS_demo : ni0 link is UP
QoS_demo : ni1 link is UP
```

Generate different type of traffic for each of the two ports: ARP, ICMP, IP, TCP, UDP, SCTP. On RDB-1, the AIOP Logger will print a brief information about every frame that is received. On ni1, the policer discards TC2 traffic (SCTP) so there are no SCTP packets received by AIOP on ni1.

8.3.7.1.8 Tuning memory

To implement frame queues QBMAN needs some extra memory in DDR to store its internal structures. The size of this memory depends on total BMAN buffers that can exist simultaneously in all queues - configured by DPC parameter `total_bman_buffers`. To run some AIOP applications when MC has less memory available (256M DDR) the user needs to reduce the memory reserved for QBMAN by providing a smaller value for `total_bman_buffers`. The table below shows which AIOP applications run with default `total_bman_buffers` value and which applications run only with a lower `total_bman_buffers` value.

Memory (in MB)/ Application/ Platform	LS1088	LS2085	LS2088	Runs when MC uses 256M		
				LS1088	LS2085	LS2088
Demo Applications						
classifier	32	64	64	Y	Y*	Y*
control_flow	32	64	64	Y	Y*	Y*
header_manip	32	4	32	Y	Y	Y
qos_demo	32	64	64	Y	Y*	Y*
reflector	32	64	64	Y	Y*	Y*
statistics	32	64	64	Y	Y*	Y*
*The application will run on 256MB only if `total_bman_buffers` tunable in MC's DPC file is lowered.						

The below table provides the sizes of two main QBMAN memory areas, the ones that consume significant memory space and will affect running of some AIOP applications when using 256M.

`total_bman_buffers` in `dpc` file	**Size of main two QBMAN memory areas**	
`32400(0x4F1A0)`	16M	4M
`64800(0x9C400)`	32M	8M

NOTE

The size of these memory areas must be a power of two: small increase over `0x4F1A0` requires next power of two bytes of memory.

8.3.7.2 AIOP Tool User's Guide

8.3.7.2.1 Introduction

The following section contains information on compilation and execution steps for the AIOP Tool application. This section is a part of the series intended to help developers use DPAA2 software on NXP's LS family of network processors. This section intended to get users up and running quickly.

8.3.7.2.2 DPAA2 Software

For information about the DPAA2 software, see the DPAA2 Software Overview section. For users that are unfamiliar with DPAA2 software, it is recommended to read that content before proceeding.

8.3.7.2.3 Product Description

8.3.7.2.3.1 Overview

What is AIOP?

AIOP or Advanced I/O Processor is an optional component of the DPAA2 architecture. It is a C-programmable engine that is optimized for packet processing and can be used on a SoC in conjunction with the general purpose cores and the other elements of the DPAA2 architecture. AIOP executes a software image containing the packet processing logic.

What is AIOP Tool?

AIOP Tool is a Linux user space application which performs the following operations on an AIOP:

1. Loading an image on an AIOP
2. Starting (running) the image on an AIOP after it has been loaded
3. Extracting state information for an AIOP
4. Getting and setting time of day on an AIOP

8.3.7.2.3.2 Product features

AIOP Tool provides following broad functions:

- Provides a command line interface for executing a set of operations
  - Command line will accept an operation from user, along with the appropriate corresponding arguments.
  - The DPRC to work on is also accepted as an argument on the command line.
- Operation for Loading AIOP Image to an AIOP
  - Command line will accept an AIOP image file.
  - Whether a reset of the AIOP should be done before loading or not can be controlled using a toggle argument passed on command line. For performing reset of AIOP before load operation, an optional toggle argument can be passed to the load operation.
    - Current hardware revision (rev1) doesn’t support reset and it is expected to work in subsequent releases. Thus, in future, the same tool can be used without any modifications.
  - Result of load API call will be provided to the caller.
- Operation for Resetting the AIOP
  - On execution, this would put the AIOP in Reset state for loading another image.
    - In the current hardware revision (rev1), this is not supported and would result in error. In subsequent versions of LS family hardware, this is expected to be operational. Once that is done, with the combination of load and run operations, multiple images can be loaded on AIOP (serially) without a hardware reset.
  - Response value of API execution will be provided to caller.
- Operation for getting and setting time of day on AIOP
  - Once an AIOP is running, 2 operations for getting and setting the time of day on AIOP are available.
  - Success or failure of the API calls would be provided to caller in case of time setting. In case of time getting operation, time since epoch would be shown.
- Operation for printing AIOP status
  - On execution of this operation, status of the AIOP is provided to the caller. This includes the current state and version information.
- Help menu will be printed by command line for displaying usage of above operations and their corresponding arguments.

8.3.7.2.4 System Requirements

This chapter describes the environment requirements for executing the AIOP Tool.

8.3.7.2.4.1 Environment required

1. MC Firmware version 9.0.x for LS2085A (RDB and QDS) EAR-6.0
2. Uboot and Linux compatible with LS2085A (RDB and QDS) EAR-6.0
3. AIOP image (ELF) is required as input to the tool

8.3.7.2.5 AIOP Tool Usage

8.3.7.2.5.1 Run time pre-requisites

Besides the environment pre-requisites listed in Environment required, the following execution time pre-requisites exist:

1. AIOP Tool requires a DPRC which has an AIOP included in it. It should be a non-root DPRC containing at least a dpmcp and dpaiop object.
   - This DPRC can be statically defined (static DPL) or dynamically created (using `restool`).
   - Please refer Steps For Dynamic DPRC Suitable For AIOP Tool Using restool below for steps for dynamically creating a suitable DPRC using `restool`.
   - Also, refer `dynamic_AIOP_dpl.sh` script delivered as part of the LSDK 1709 release. This is a script version of dynamic DPRC creation steps mentioned in Steps For Dynamic DPRC Suitable For AIOP Tool Using restool.
2. VFIO support in Linux kernel
   - AIOP is a hardware device which AIOP Tool attempts to access from Linux userspace. For exchanging information between AIOP Tool and AIOP, a secure memory area is required which can be accessed by both. Linux VFIO or Virtual Function I/O, provides a framework for securely exposing certain memory area which is equally accessible by AIOP Tool and AIOP hardware. VFIO would map the addressing understood by AIOP hardware to that of addressing managed by user-space application.
   - This application assumes that the `dpaiop` device would be mapped into VFIO driver so as to use DMA mapping between AIOP Tool and AIOP hardware and for pushing SMMU addresses for AIOP hardware's access to user-space memory
   - Refer Sample VFIO Binding Script for a sample script to perform binding of a DP object with VFIO.
3. Valid AIOP image for loading
   - For sample, refer to `cmdif_integ_dbg.elf` image provided along with '`aiopsl`' repo.

8.3.7.2.5.2 Environment setting

For executing the AIOP Tool, a valid DPRC is required. There are three ways to define a DPRC:

1. Provide DPRC through '`-g`' command line tool. For e.g., `aiop_tool <sub-command> -g dprc.4`.
2. If not provided through command line, the binary expects the environment variable `DPRC` defined.
3. If neither an argument nor environment variable is provided, binary assumes a default value of DPRC as `dprc.5`. (Current hard-coded in the code)

8.3.7.2.5.3 Command line arguments

All variants of the execution follow a standard pattern:

```
aiop_tool <sub-command> <Arguments>
```

`<Sub-command>` includes `help`, `load`, `gettod`, `settod`, `status` and `reset`.

`<Arguments>` are either mandatory (for e.g., image file path), or optional (for e.g., DPRC name).

All variants assume that the VFIO binding has already been performed on the command line for the DPRC on which command would be executed. Further, following samples/snippets assume that DPRC would be passed on command line, though all three methods mentioned in Environment setting are valid.

Following table describes all the variants of the AIOP Tool execution.

<table>
<tr><th>Argument/command pattern</th><th>Description</th></tr>
<tr><td><code>aiop_tool</code> help</td><td>Displays help including various sub-commands and their output.</td></tr>
<tr><td><code>aiop_tool</code> load</td><td>Loading a valid ELF image onto the AIOP and starting it.
Valid arguments are:
<table>
<tr><td>-g <DPRC name></td><td>Name of the DPRC containing the AIOP Object. Th
Optionally, use <code>--container=</code>.</td></tr>
<tr><td>-f <AIOP image file></td><td>[Mandatory] Name, with path, of the AIOP image fil
Optionally, use <code>--file=</code>.</td></tr>
<tr><td>-a <AIOP argument file></td><td>[Mandatory] A file containing arguments to be pass
Optionally, use <code>--args-file=</code>.</td></tr>
<tr><td>-c <Threads per AIOP Core></td><td>[Optional] Threads per AIOP Core to execute. Defa
Optionally, use <code>--threadpercore=</code>.</td></tr>
<tr><td>-r</td><td>[Optional] Reset toggle; If provided, AIOP Tool will be done.
Optionally, use <code>--reset</code>.</td></tr>
<tr><td>-v</td><td>Verbose Output (More informative with INFO level
Optionally, use <code>--verbose</code>.</td></tr>
<tr><td>-d</td><td>Debug Output (DEBUG level messages).
Optionally, use <code>--debug</code>.</td></tr>
</table>Following is the expected output of the command:
In case of incorrect parameters (incorrect DPRC, wrong file path, or incorrect parameter), failure would be reported along with help usage.
Success of failure, as reported by MC’s API; the AIOP Tool would convert the error into a readable string.</td></tr>
<tr><td><code>aiop_tool</code> gettod</td><td>Obtaining the Time of day on the AIOP.
Valid arguments are:
<table>
<tr><td>-g <DPRC name></td><td>Name of the DPRC containing the AIOP Object. Th</td></tr>
<tr><td>-v</td><td>Verbose Output (More informative with INFO level</td></tr>
</table></td></tr>
</table>

<table>
<tr><th>Argument/command pattern</th><th>Description</th></tr>
<tr><td></td><td>
<table>
<tr><td>-d</td><td>Debug Output (DEBUG level messages)</td></tr>
</table>
Following is the expected output of the command:

In case of incorrect parameters (incorrect DPRC), failure would be reported along with usage help.
Time of day (64Bit value) as returned by MC’s API in case of success.
<pre>Time of day: 184082</pre>
Failure, as reported by MC’s API; the AIOP Tool would convert the error into a readable string.

</td></tr>
<tr><td>aiop_tool settod</td><td>Set time on the AIOP.
Valid arguments are:
<table>
<tr><td>-g <DPRC name></td><td>Name of the DPRC containing the AIOP Object. Th</td></tr>
<tr><td>-t sec_since_epoch</td><td>[Mandatory] Time, in milli-seconds, since epoch.</td></tr>
<tr><td>-v</td><td>Verbose Output (More informative with INFO level</td></tr>
<tr><td>-d</td><td>Debug Output (DEBUG level messages)</td></tr>
</table>
Following is the expected output of the command:

In case of incorrect parameters (incorrect DPRC, non-integer time), failure would be reported along with usage help.
Success of failure as reported by MC’s API; the AIOP Tool would convert the error into readable string.

</td></tr>
<tr><td>aiop_tool status</td><td>Valid arguments are:
<table>
<tr><td>-g <DPRC name></td><td>Name of the DPRC containing the AIOP Object. Th</td></tr>
<tr><td>-v</td><td>Verbose Output (More informative with INFO level</td></tr>
<tr><td>-d</td><td>Debug Output (DEBUG level messages)</td></tr>
</table>
Following is the expected output of the command:

In case of incorrect parameters (incorrect DPRC), failure would be reported along with usage help.
Status, including current state, SL version.
<pre>AIOP running status:
  Major Version: 2, Minor Version: 1
  Service Layer:- Major Version: 0,</pre>

</td></tr>
</table>

Table continues on the next page...

Table continued from the previous page...

<table>
<tr><th>Argument/command pattern</th><th>Description</th></tr>
<tr><td></td><td>

```
Minor Version: 7, Revision: 0
  State: DPAIOP_STATE_RUNNING
```

Success of failure as reported by MC’s API; the AIOP Tool would convert the error into readable string.
</td></tr>
<tr><td>aiop_tool reset</td><td>Reset the AIOP. This is current feature support, dependent on support by hardware.
Valid arguments are:
<table>
<tr><td>-g <DPRC name></td><td>Name of the DPRC containing the AIOP Object. Th</td></tr>
<tr><td>-v</td><td>Verbose Output (More informative with INFO level m</td></tr>
<tr><td>-d</td><td>Debug Output (DEBUG level messages)</td></tr>
</table>
Following is the expected output of the command:
In case of incorrect parameters (incorrect DPRC), failure would be reported along with usage help.
Success of failure as reported by MC’s API; the AIOP Tool would convert the error into readable string.
</td></tr>
</table>

8.3.7.2.5.4 Command execution samples

1. Obtaining status of AIOP

```
$ aiop_tool status -g dprc.4
AIOP running status:
  Major Version: 0, Minor Version: 0
  Service Layer:- Major Version: 0, Minor Version: 0, Revision: 0
  State: DPAIOP_STATE_RESET_DONE
```

   Before loading the image, for this version where hardware Reset operation is not supported, the state DPAIOP_STATE_RESET_DONE can be verified using above example.

2. Loading an ELF image on AIOP

```
$ aiop_tool load -g dprc.4 -f cmdif_integ_dbg.elf
AIOP Image (cmdif_integ_dbg.elf) loaded successfully.
```

   The `load` sub-command loads as well as runs an AIOP. Once the image has been loaded, after a few seconds, the status output would look similar to:

```
$ aiop_tool status -g dprc.4
AIOP running Status:
  Major Version: 2, Minor Version: 1
  Service Layer:- Major Version: 0, Minor Version: 7, Revision: 0
  State: DPAIOP_STATE_RUNNING
```

3. Get time of day from AIOP

```
$ aiop_tool gettod -g dprc.4
Time of day: 184082
```

4. Set time of day on AIOP

```
$ aiop_tool gettod -g dprc.4 -t 100010
<No output, if successful>
```

8.3.7.2.6 Known Limitations

1. It assumed that the DPRC passed to AIOP Tool has a single AIOP (`dpaiop`) and MC portal (`dpmcp`). This application would parse the contents of DPRC and stop on first found instances of `dpaiop` and `dpmcp` – even if multiple instances have been defined. The order of finding would be dependent on how objects are parsed from the sysfs directory.
2. Due to a limitation of the MC API, AIOP Tool instance doesn't automatically exit once executed (not a run-to-completion model). As soon as the AIOP image is successfully loaded, the AIOP Tool application will keep looping without relieving the foreground shell. Following are some consequences of this limitations:
    a. Once executed, the AIOP Tool application sits in foreground without releasing the Linux Shell it ran on. To obtain the Linux shell on which AIOP Tool was executed, AIOP Tool application should be pushed into background (or started in background) through Linux shell semantics.
    b. Once executed and backgrounded, another instance of the AIOP Tool over same DPRC cannot be executed. This also implies that status requests for the AIOP cannot be done, either through same instance or through another instance of the application. To obtain the AIOP status, use other available methods, like `restool`.

8.3.7.2.7 Sample VFIO Binding Script

```
#/*
# * Sample bind script for VFIO.
# */

DPRC_4=/sys/bus/fsl-mc/devices/dprc.4

if [ -e /sys/module/vfio_iommu_type1 ];
then
    echo "#1) Enabling interrupts"
    echo 1 > /sys/module/vfio_iommu_type1/parameters/allow_unsafe_interrupts
else
    echo "No VFIO support available."
    exit
fi

if [ -e $DPRC_4 ];
then
    echo "#1.1) dprc container driver override"
    echo vfio-fsl-mc > /sys/bus/fsl-mc/devices/dprc.4/driver_override
    echo "#1.2) Bind dprc.4 to VFIO driver"
    echo dprc.4 > /sys/bus/fsl-mc/drivers/vfio-fsl-mc/bind
fi

if [ -e /dev/vfio ];
then
    ls /dev/vfio/
else
```

```
    echo "No VFIO support available."
fi
```

8.3.7.2.8 Steps For Dynamic DPRC Suitable For AIOP Tool Using restool

Assuming that a DPL is available which has AIOP container defined in it, this section provides information and sample commands for creating a DPRC which is suitable for use with the AIOP Tool.

AIOP Tool expects a DPRC which contains at least one dpmcp and a dpaiop object. Further, the DPRC should be a non-root DPRC – so that user-space application (AIOP Tool) can access its content.

All the commands would be performed using `restool` compatible with the MC version for which AIOP Tool is targeted. The sample steps below assume that there are enough resources to create a MC portal (`dpmcp`) and the AIOP object (`dpaiop`).

1. Creating a new DPRC which is child object of root DPRC, `dprc.1`.

   ```
   $ restool dprc create dprc.1 --
   options=DPRC_CFG_OPT_SPAWN_ALLOWED,DPRC_CFG_OPT_ALLOC_ALLOWED,DPRC
   _CFG_OPT_IRQ_CFG_ALLOWED
   ```

   The output would be similar to:

   ```
   dprc.2 is created under dprc.1
   ```

   Note the new DPRC name, `dprc.2`, in the above output sample. Steps hereafter assume that new DPRC is `dprc.2`; please replace DPRC name in subsequent steps where required.

   State of newly created DPRC can be confirmed using following command:

   ```
   $ restool dprc info dprc.2
   ```

   Output would be similar to:

   ```
   container id: 2
   icid: 26
   portal id: 3
   version: 5.1
   dprc options: 0x43
   DPRC_CFG_OPT_SPAWN_ALLOWED
   DPRC_CFG_OPT_ALLOC_ALLOWED
   DPRC_CFG_OPT_IRQ_CFG_ALLOWED
   ```

2. *In case dpaiop object already exists in any DPRC, skip to Step 3 below.* The steps below are for creating a `dpaiop` object in the `dprc.1`. This requires information about the AIOP container (`dprc.3` has been assumed below).

   ```
   $ restool dpaiop create --aiop-id=0 --aiop-container=dprc.3
   ```

   In the above command, it is assumed that the AIOP container is dprc.3. The output would be similar to:

   ```
   dpaiop.0 is created under dprc.3
   ```

   The `dpaiop.0` object would be available in the `dprc.1` after this command.

3. Assuming that a `dpaiop` object, `dpaiop.0`, is available in the root `dprc.1`; Unplug the `dpaiop.0` in the `dprc.1` so that it can be assigned to a new DPRC.

   ```
   $ restool dprc assign dprc.1 --child=dprc.1 --object=dpaiop.0 --
   plugged=0
   ```

Check the status of dpaiop.0 object using

```
restool dprc show dprc.1
```

to confirm if it has been put in 'unplugged' state. If dpaiop object is already part of another DPRC, it has to be assigned to unplugged and assigned to dprc.1 before it can be assigned to a targeted container. Steps for that would be similar to:

Unplugging the dpaiop object state

```
$ restool dprc assign <dprc.X> --object=dpaiop.0 --plugged=0
```

Above command sample assumes dpaiop.0 is present in dprc.X Thereafter, move the dpaiop.0 object to dprc.1

```
$ restool dprc unassign dprc.1 --child=dprc.X --object=dpaiop.0
```

Hereafter, dpaiop.0 is available in dprc.1 to be moved to a target DPRC – as described in steps below.

4. Assign the dpaiop.0 object to dprc.2 and toggle state to plugged. This would work only if dpaiop.0 is already unplugged in root DPRC.

```
$ restool dprc assign dprc.1 --child=dprc.2 --object=dpaiop.0 --
plugged=1
```

Check the status of dpaiop.0 object using

```
restool dprc show dprc.2
```

to confirm if it has been put in 'plugged' state.

5. Create a new MC portal object

```
$ restool dpmcp create
```

This result in an output similar to:

```
dpmcp.4 is created under dprc.1
```

New MC portal dpmcp.4 has been created under root DPRC. This needs to be moved to dprc.2 – as shown in next step.

NOTE

Note: It is possible to re-use an existing MC portal using steps similar to those shown below. It is possible that dpmcp object is already bound to certain driver (for e.g. VFIO driver), in which case, it needs to be unbound before being moved out.

6. Move dpmcp.4 from dprc.1 to dprc.2 and move to 'plugged' state.

```
$ restool dprc assign dprc.1 --child=dprc.2 --object=dpmcp.4 --
plugged=1
```

Check the status of dpmcp.4 object using

```
restool dprc show dprc.2
```

to confirm if it has been moved into dprc.2 and put into 'plugged' state.

7. Confirm that both the objects, dpmcp.4 and dpaiop.0, are part of dprc.2

```
$ restool dprc show dprc.2
```

Output would be similar to:

```
dprc.2 contains 2 objects:
object       label      plugged-state
dpaiop.0                plugged
dpmcp.4                 plugged
```

Hereafter, the DPRC `dprc.2` is ready to be used with AIOP Tool once VFIO binding is done. See Sample VFIO Binding Script above for information on VFIO binding.

8.3.7.3 AIOP User Manual

Click here to access the AIOP User Manual PDF.

8.3.7.4 AIOP Program Profiling

8.3.7.4.1 Overview

This document describes techniques for performance enhancements for software developed for AIOP. The reader should understand basic AIOP architecture and service layer API.

The structure of this document is the following:

- Explain the performance capabilities and limits of different processing elements of AIOP that should be taken into account at design time and in optimization time.
- Specific methods for identifying bottlenecks for different processing elements and memory subsystem

Readers should also have access to the CodeWarrior Development Studio for Advanced Packet Processing product inside a larger software suite called CodeWarrior Development Suites for Networked Applications (CW4NET), which includes the AIOP Analysis Tool and Scenarios tool.

AIOP Analysis Tool trace examples are used throughout this document. Users should be familiar with this tool since it is regularly used to debug and profile AIOP. Meanwhile, the Scenarios Tool is crucial when measuring memory bandwidth.

8.3.7.4.2 AIOP Program Design: Budgets Per Processing Elements

AIOP developers must consider the available capacity for each hardware element and design their programs accordingly.

For example, the LS2085A AIOP has 16 cores running at 800 MHz. This means that 800 x 16 = 12,800 million core cycles per second are available.

If instructions per cycle (IPC) is about 0.75 for each core, cores can execute about 10,000 million instructions per second. In order to handle 10 million frames per second, a budget of 1,000 instructions per each frame is available.

In order to achieve 17 million packets per second (MPPS) (which is approximately line rate for 2 x 10GE for 128-byte packet), maximum 588 instructions can be used to process a packet.

The Performance Capacity per Resource table below shows performance budgets for some AIOP operations.

Table 137. Performance Capacity per Resource

	Use case and other Information	Performance capacity – Rev1

Table continues on the next page...

Table 137. Performance Capacity per Resource (continued)

Cores	16 x 800 MHz MCPS (million cycles per second) x 0.75 IPC = 9600 Instraction per second	16x800Mhz
OSM (Ordering Scope Manager)	Enter/exit pair, transitions	80 MOPS (million operations per second)
TMan (Timers Manager)	Timer commands per second (assuming 10M timers)	1 M [Timer fires/sec]
	Timer tasks initiated per second (assuming 10M timers)	1 M [commands/sec]
STE (Stats Engine)	Number of STE commands per second	68 M [commands/sec]
CDMA/FDMA (Context/Frame DMA)	17 MPPS packet presentations/ enqueues with 3 CDMA operation combined	
Tables	Exact Match (EM) key size up to 124 B;	51 MOPS
	LPM key sizes, 4 byte EM + 4 byte LPM (IPv4) or 4byte EM + 16 byte LPM (IPv6)	17 MOPS
	Management commands on a 10 K rules balanced tree on PEB	500 K [commands/sec]
	Total 5 lookups at 17 MPPS: 3 Exact Match + 1 LPM + 1 MFLU	
	17 MOPS. ACL key size up to 56 B	17 MOPS
Parser	Max parser performance capacity	34 MOPS
	Max accesses to CTLU at 17 Mpps, including parser	6
	Typical use case at 17 Mpps	5 lookups + 1 parser

8.3.7.4.3 AIOP Program Profiling and Performance Tuning

AIOP programs have tight performance requirements and developers need to profile their applications in order to improve their performance characteristics.

There are two stages in profiling AIOP applications:

1. Finding bottlenecks in the application
2. Fixing bottlenecks found for each specific application

An AIOP task is a sequence of jobs executing on different processing elements. The performance of the overall task is dictated by the performance of the weakest element, which makes the weakest element a bottleneck of the application.

Take for example a task that involves receiving a frame, doing a look up, and sending the frame to another interface.

This task uses the core, FDMA, CDMA and TLU processing elements. Assuming that the core is going to run for 1000 cycles per task and that the task has 2 FDMA jobs, 2 CDMA jobs and one LPM CTLU job, how many tasks per second can the AIOP handle?

To answer this question, calculate the number of jobs each processing element can handle. Use the following assumptions to solve the example above:

- 16 cores running at 800 MHz
- Based on table for rev1, we can see that AIOP can perform 17 million of operations of 3 FDMAs + 2 CDMAs per second
- CTLU can perform 17 million LPM lookups per second

Because there are 16 x 800 MHz = 12,800 million cycles per second, 12,800/1,000 = 12.8 million tasks per second can be processed.

FDMA/CDMA: 17 millions per second = throughput of 17 million tasks

CTLU: 17/1 = throughput of 17 million tasks

Based on this analysis, the estimated maximum performance boundary for this application will be 12.8 tasks per second and its bottleneck is core performance. We do not take into account other possible artifacts, such as synchronization constrains etc. just for simplification of initial analysis.

The analysis above is very useful for initial estimation during the design and implementation stages as it allows the programmer to design the program with specific performance goals in mind. For more information on performance characteristics of different processing elements see AIOP Program Design: Budgets Per Processing Elements.

Installing the AIOP Analysis Tool

In order to find bottlenecks within applications, AIOP tools are used; one in particular is the AIOP Analysis Tool.

The AIOP Analysis Tool is a component of CodeWarrior Development Studio for Advanced Packet Processing product inside a larger software suite called CodeWarrior Development Suites for Networked Applications (CW4NET). The AIOP Analysis Tool is available for download on the NXP Semiconductors website.

To download the AIOP Analysis Tool, click on the "Downloads" tab and under "CodeWarrior Development Studio for Advanced Packet Processing", select "Latest Version". Click on "CodeWarrior for Advanced Packet Processing Evaluation / Updates" and download the installer. After the download is complete, run the installer:

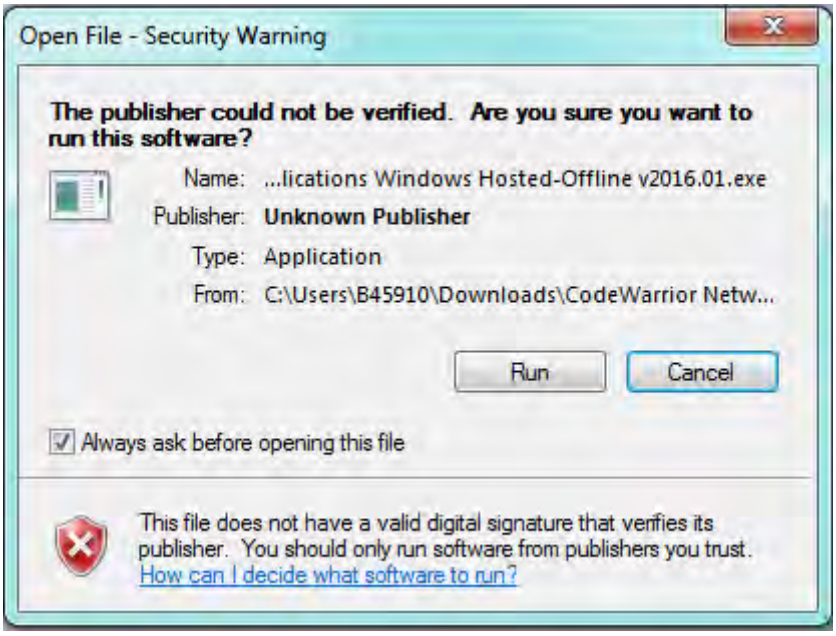

Figure 162. CodeWarrior for Networked Applications Installer

After running the installer, follow the Setup Wizard and Click "Next":

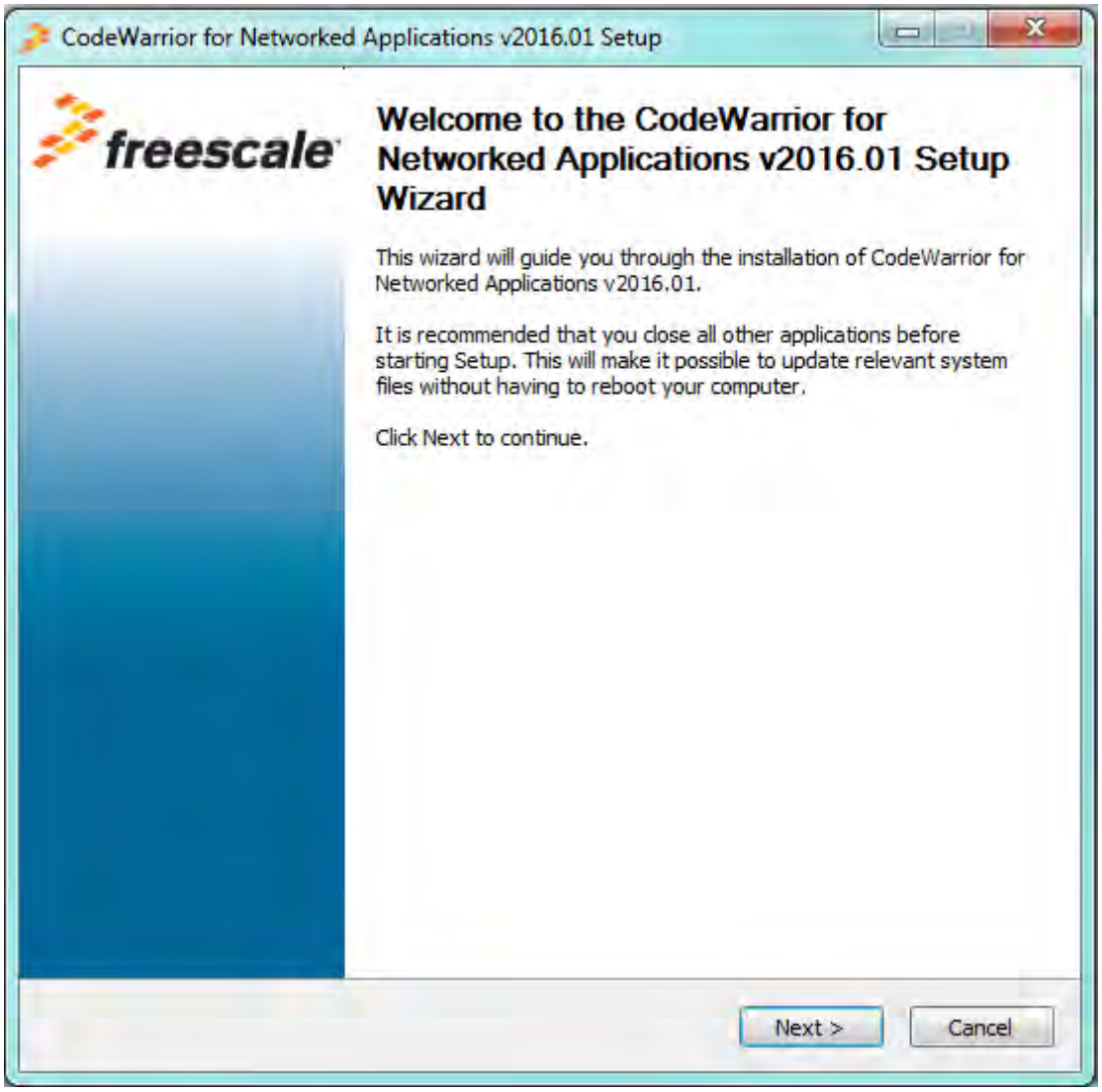

Figure 163. CodeWarrior for Networked Applictions Setup Wizard

The AIOP Analysis Tool has to be selected within the components to install. After confirming the selection, the installer will download the tools automatically according to the selection:

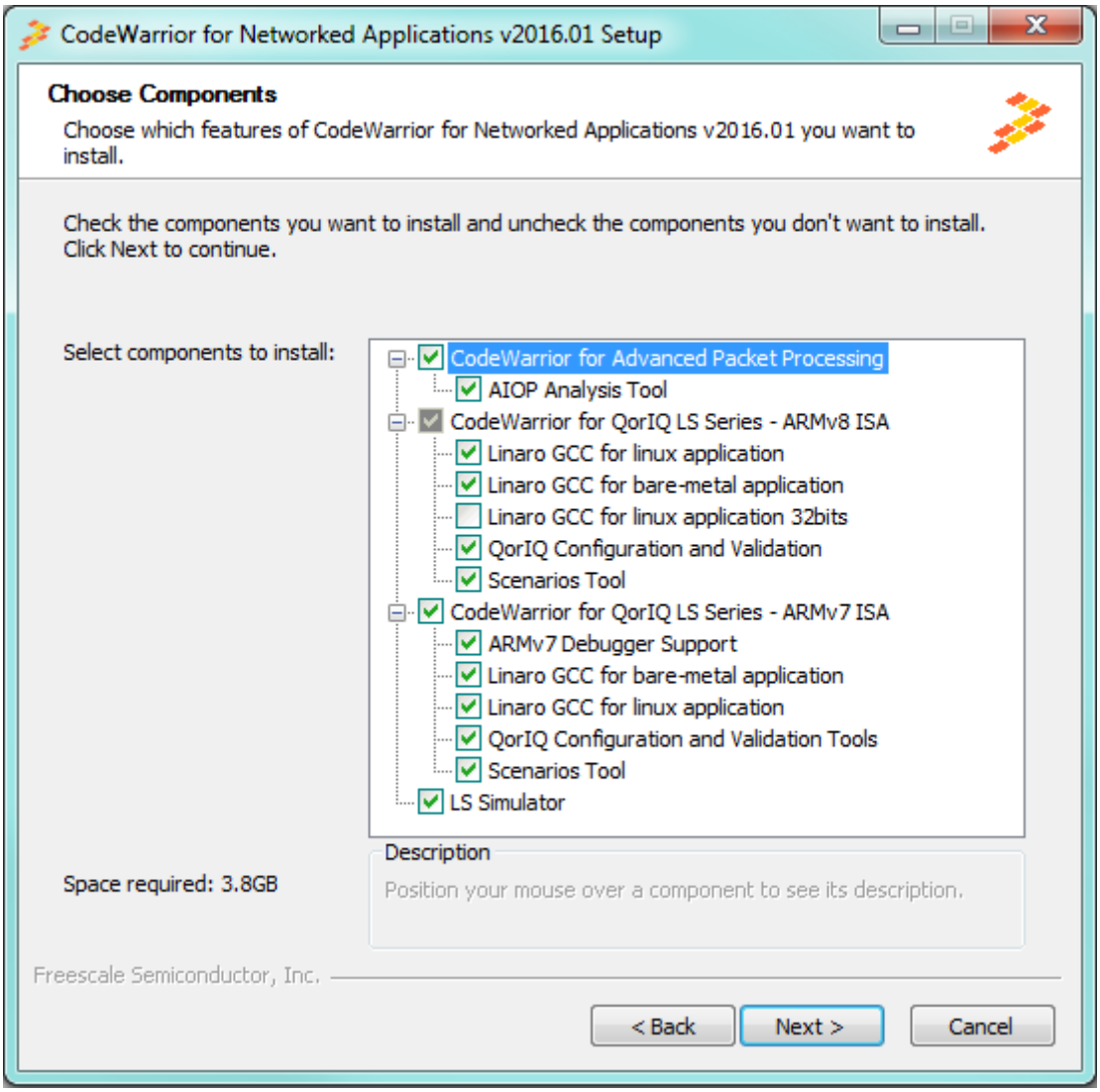

Figure 164. CodeWarrior for Networked Applictions Tool Selection

Bottleneck analysis of existing application

This section explains in detail how to find bottlenecks within applications using the AIOP Analysis Tool. This tool captures the scheduler trace, presents it in graphical way and provides some statistics based on this trace.

The figure below shows a code snippet and its associated trace for a simple reflector program:

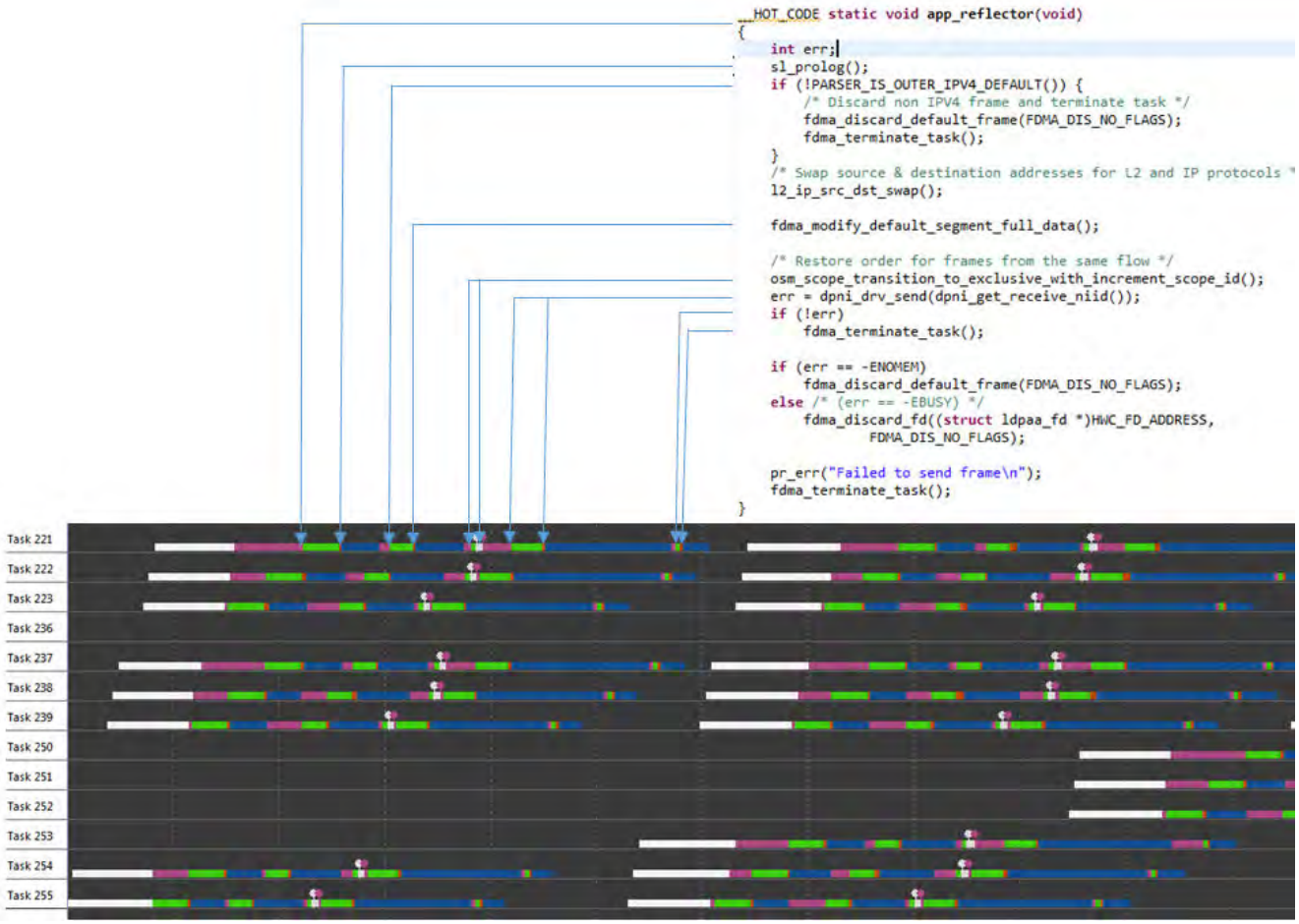

Figure 165. Trace of Reflector Application

The trace measures the length of each job in the task and shows the utilization of resources. (hover the mouse to highlight a specific job):

Figure 166. Task Information

What is the bottleneck of this application? In the following sections, we will show how you can find bottlenck based on this trace

8.3.7.4.4 FDMA/CDMA

The implementation of the CDMA/FDMA module is the following:

- FDMA and CDMA are actually one hardware block sharing the same resources.
- Thread = an FDMA/CDMA context which executes job on behalf of a task. 64 are present in rev1.
- Foreground slot = a HW execution resource that is loaded with a thread (and its context) in order to perform work on the thread (execute its command). 16 are present in rev1.
- Background slot = a HW resource that holds a suspended thread. This is a thread that is assigned (from a software point of view), but is blocked waiting for a high latency action to complete.
- Thread switching = moving FDMA threads between foreground (execution) and background (suspended) slots.

In the trace window we can see the number of assigned threads. This number is not precise due to how we measure it, but it can provide a good estimate.

Table 138. FDMA/CDMA Jobs

Core 13	63.12% Utilization
Core 14	63.97% Utilization
Core 15	63.23% Utilization
PC-CTLU	1.43 job average
TL-CTLU	11.86 job average
P.FDMA	3.65 job average
CDMA	20.91 job average
O.FDMA	10.49 job average

Table continues on the next page...

Table 138. FDMA/CDMA Jobs (continued)

Total tasks	167
Tasks created	9,060,691.863 tasks/sec
Tasks finished	8,666,748.738 tasks/sec

We see here that the following number of threads are utilized:

1.43 + 11.86 + 3.65 + 20.91 + 10.49 = 48.34

48 is smaller than 64 so we are not running short of number of FDMA/CDMA threads.

Example of overall task analysis

Here we look at task trace of a reflector application and and analyzing it trying to find a bottlneck.

First, determine how many tasks are executing in parallel with the AIOP by looking at the following trace:

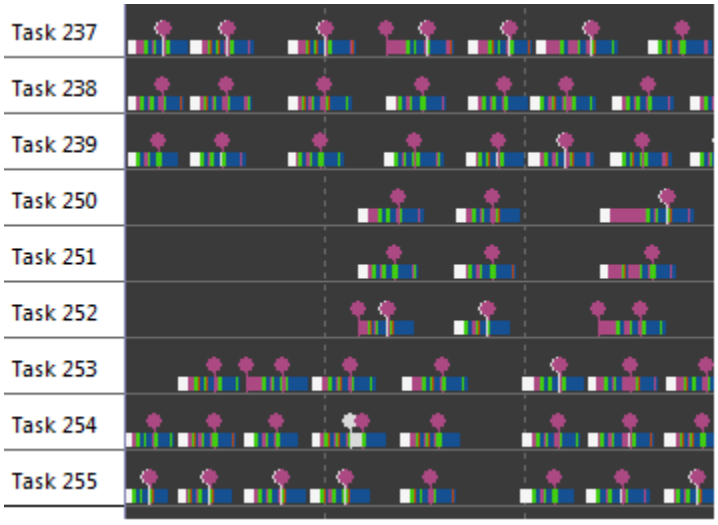

Figure 167. Trace Analysis

For simplicity we show only snapshot of tasks with higher numbers. Task scheduler begins scheduling with those tasks as well. Trace tool only shows tasks that were active at some point.

On core 15, only 6 tasks (Task 250 to Task 255) are executing, instead of 16 tasks. There are two possible reasons for this:

- The AIOP is underutilized; not enough traffic is sent to it.
- The FDMA/CDMA is a bottleneck as *only FDMA/CDMA can push back* to the work scheduler.

If enough traffic is sent to saturate the AIOP, but not all AIOP tasks are utilized, then the FDMA/CDMA is the bottleneck of your application.

Bottlenecks caused by CDMA/FDMA:

- Run out of Foreground slots. This may happen when memory becomes very congested and the CDMA waits for transactions for a long time. This bottleneck can be identified by looking at the average number of CDMA/FDMA jobs. If this number is close to the number of threads, then the bottleneck is within the CDMA/FDMA.

- Runs out of Threads. This happens when all CDMA/FDMA foreground slots are busy executing. This condition rarely happens as the previous condition happens first.

Strategies for reducing FDMA/CDMA bottlenecks

- Reduce the size of the initial presentation. The FDMA block is sensitive to presentation size; reducing presentation size from 128 to 64 Bytes may significantly reduce the pressure on the FDMA. For example, the figure below shows that task creation job (which is using FDMA) for 64 Byte presentation takes 233 cycles, while a 128-Byte presentation can take over 500 cycles. For IPv6 frames (or for any bigger header frames), initially present a bigger area or re-represent more data after determining that one is dealing with an IPv6 frame.

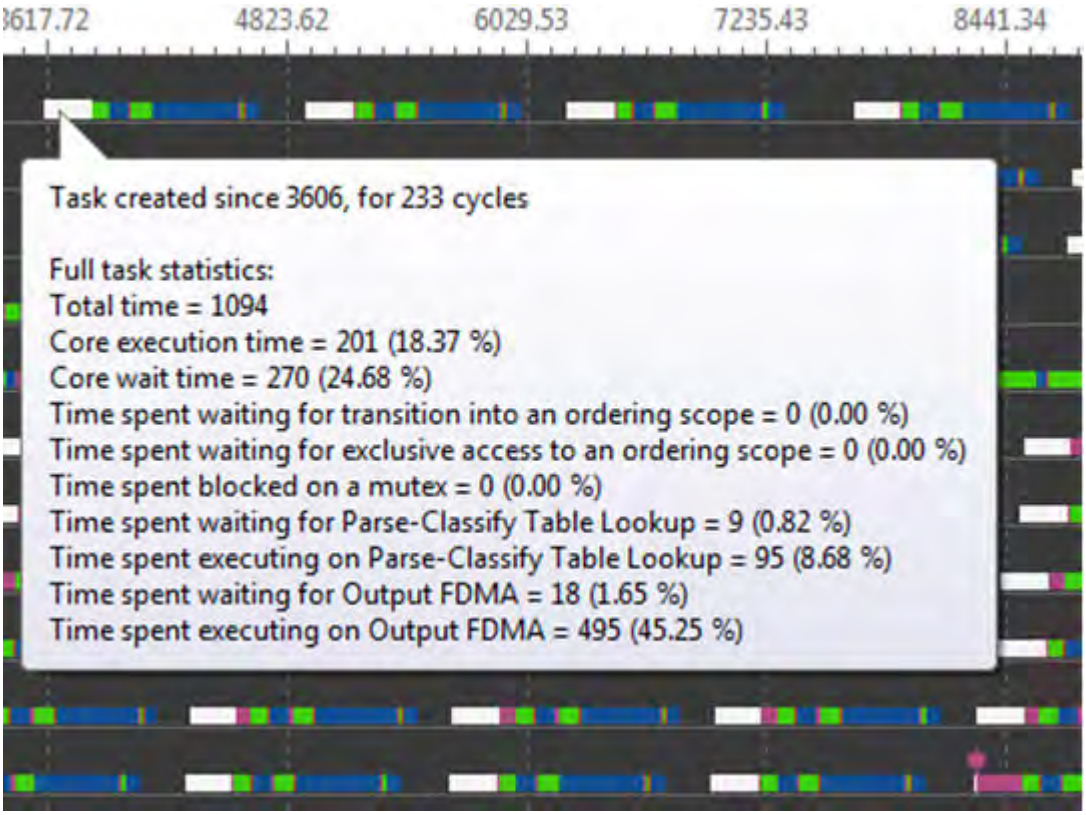

Figure 168. Task Creation Job Using FDMA

- Reduce the number of CDMA calls. Look for opportunities to combine one or more reads or writes. This will reduce pressure on the CDMA block and memory. For example, when reading two integers, a and c, in struct such as:

```
struct {
int a;
int b;
int c;}
```

  It is better to read both integers in one read, even if that means also reading c.

- Mutex – Mutex on rev1 can be called 12 million times per second when multiple Mutex IDs are used and about 5 million times per second if a single ID is used.
- Try to align and pack all CDMA accesses. For example, when reading 64 bytes of data per packet, place it in DDR memory with a 64-byte alignment. In any case, try not to cross 64-byte boundaries when possible, as it will cause two accesses instead of one.
- Allow sufficient headroom for frame changes (inserts). There is an API that can override some parameters in the default storage profile, which should be called during the early initialization stage dpni_drv_register_rx_buffer_layout_requirements().

- Call once for multiple changes. For example multiple changes in a frame header can be made using a single FDMA call.
- Do not represent segments (for example frame data segments) when possible.
- While a frame is open for the AIOP task, it may be edited with FDMA commands, but the changes may not be visible to consumers outside the AIOP. There is no need to do an FDMA store command unless those updates must be visible to consumers outside the AIOP (e.g. an external memory).
- Some FDMA commands have options to encapsulate other commands, creating compound commands. Use compound commands when appropriate. See the table below.

Table 139. FDMA Compound Commands

Command	Combined Options
Present (open) Frame	Present frame data segment
Enqueue Frame	Terminate task Discard frame (when enqueue fails) Relinquish OSM exclusivity in current scope right after the enqueue to QMan is issued
Replace Segment Data	Represent Segment Data Close segment
Concatenate Frames	Close concatenated frame
Split Frame	Close new frame Present new frame data segment
Replicate Frame	Enqueue new frame, optionally Relinquish OSM exclusivity Discard source frame

8.3.7.4.5 Core Profiling

Strategies for reducing core bottlenecks

Core bottlenecks are easily identified by examining the core load in the trace tool. If the core load gets close to 100% percent, it means that the bottleneck is core cycles. Generally, it is a good problem to have after the final optimization stage as the core is the most valuable resource. If the application has a bottleneck with the core, that means the core is being used to its maximum. This table is an example of usage of trace tool for core profiling:

Table 140. Core Utilization

Range Time	1118954.00 cycles
Core 0	99.60% Utilization
Core 1	83.13% Utilization
Core 2	93.11% Utilization
Core 3	99.61% Utilization
Core 4	99.62% Utilization
Core 5	86.42% Utilization

Table continues on the next page...

Table 140. Core Utilization (continued)

Core 6	83.14% Utilization
Core 7	89.74% Utilization
Core 8	86.37% Utilization
Core 9	86.43% Utilization
Core 10	83.15% Utilization
Core 11	89.72% Utilization
Core 12	86.43% Utilization
Core 13	89.68% Utilization
Core 14	89.83% Utilization
Core 15	99.92% Utilization

Example task analysis for core utilization

What can be done to resolve this problem?

First, look at the trace, identify all core jobs and check that job lengths are reasonable and expected. If you find something not expected, examine code that is executed for this job and try to find ShRAM accesses, make sure code is running from iRAM (for performance sensitive code), no accesses to PEB, DDR or regicters are made in your code. Access to DDR can take up to 200 cycles and should be avoided.

It is a good idea to measure IPC of your program so that you know that it is in a reasonable range. We use scenario tool to measure it on AIOP. In order to measure IPC directly in a running program, open the following scenario: `aiop_throughput_IPC_ssram_access` (*warning: you must disable run-time stack check in AIOP by undefining STACK_OVERFLOW_DETECTION as this feature is utilizing the same resources as this scenario)*

The IPC for each core is measured based on the following formula:

INSTR_COMPLETED / (PLATFORM_CLK - CTS_NO_TASK_CYCLES)

Based on the formula, divide the *number of instructions completed by each specific core* by the *number of cycles that core was executing tasks* (was not idle).

After measurement, the result is similar to the figure below:

IPC:core0	IPC:core1	IPC:core7	IPC:core8
0.58505	0.584909	0.584624	0.584829
0.585066	0.584925	0.584643	0.584851
0.585033	0.584884	0.584592	0.584803
0.585045	0.584917	0.584611	0.584821
0.585035	0.584905	0.584606	0.584838
0.585051	0.584911	0.584616	0.584803
0.585045	0.584902	0.58462	0.584821
0.58505	0.584915	0.584626	0.584822
0.585058	0.584908	0.584635	0.58484
0.585043	0.584924	0.584619	0.584834

Figure 169. Example IPC for Each Core

Generally, if the IPC is lower than 0.70, we need to investigate why. One of the most common reasons for low IPC would be accessing ShRAM (Shared SRAM) in the program. However if the resulting IPC is a really low number, then the code must not be running from IRAM.

Here is how one can calculate the approximate IPC based on number of ShRAM accesses and accelerator calls. In the previous scenario, we can look at following data:

Instructions per packet	Shared SRAM accesses per packet	Accel calls per packet
198	10	4
198	10	4
198	9.99998	4
198	10	4
198	9.99999	4
198	10	4
198	9.99999	4
198	10	4
198	10	4
198	9.99999	4
198	10	4
198	10	4

Figure 170. Packet Information: ShRAM Accesses and Accelerator Calls

The formula below was used to approximate the number of cycles spent by the core as a function of the number of ShRAM accesses, accelerator calls, and instructions executed.

N_Core_Cycles = (N_Instr * CPI) + (N_ShRAM * 12) + N_Accel_Calls * 4

In our case we get:

N_Core_Cycles = 198 * 1 + 10 *12 + 4*4 = 332

IPC ~ 198/332 = 0.596

For the example above, this low IPC is due to a high number of ShRAM accesses.

Improving core performance

- Inline the code where possible, especially for functions that are part of a “hot path”. Most of SL APIs are already in-lined.
- Reduce the number of accesses to shared memory. Shared memory has 12 cycles latency and 10 accesses will incur at least 120 cycles.
- Place all per-packet code in IRAM. For that, qualify such code with `__HOT_CODE`. For example:

```
__HOT_CODE uint64_t shbp_acquire(uint64_t bp, struct icontext *ic)
{
    struct shbp shbp;
    uint32_t offset;
    uint64_t buf;
    int err;
```

Figure 171. Example of __HOT_CODE

- Never place any performance sensitive code in DDR.
- Avoid floating-point operations and operands. The e200 core emulates floating-point operations/operands, which causes performance to be very low. Use fixed-point operations instead, when required.
- Use all available cores and maximize possible tasks per core. Typically, it will not be an issue to use all the cores, but using all tasks could be challenging sometimes because of stack size. If the stack requires more than ~1500 available entries to maximize the number of tasks, do the following:
    1. Run the stack static analysis tool and check where you use most of the stack
    2. Restructure your code, so that:

       `a() -> b() ->c()` chain that will require a lot of stack

       is replaced with the following:

       ```
       a();
       b();
       c();
       ```

8.3.7.4.6 Memory profiling

AIOP programs may use different types of memories:

- external (DDR, PEB)
- internal (ShRAM, Workspace)

DP-DDR (DDR3 controller)

DDR memories are the first suspect to be oversubscribed. During the design stage of the system, developers should keep DDR bandwidth in mind.

The bandwidth of DP-DDR is 4 Bytes x 1.6 GHz = 6.4 GB/s

In a perfect situation where everything is aligned, accesses are all 32 bytes in length. However, this is not usually the case, but this number can provide a good starting point.

Example task analysis for DDR usage

So, let's assume we have context data in DP-DDR. It has 32 byte size and it accesses each frame with 17 MFPS.

We will get 32 x 17 MFPS = 544 MB/s, which is 544 MB/s / 6.4 GB/s = 8.5% of bandwidth

What happens when tables are placed into this memory?

The following is how look-up hardware accesses memories:

- LPM IPv4 takes 4*(1+alpha/2) memory accesses
- LPM IPv6 takes 6*(1+alpha/2) memory accesses

- EM takes (1+alpha/2) memory accesses

Alpha is the fill factor which goes from 0 to 1. The worst case condition is when alpha is 1. This means the tables fully utilize the CTLU memory.

Each access is 64 bytes.

Assume that the EM table has been placed in DP-DDR. Calculate the load on DP-DDR when running at 17 MFPS load.

The load will be:

1 x 64 x 17 MFPS / 6.4 GB/s = 0.17 = 17%

DP-DDR can safely be loaded up to 60%. However at 60% load, expect a spike in latency of DP-DDR. For example, it is impossible to place the LPM table there at 17 MFPS:

4 x 64 x 17 MFPS / 6.4 GB/s = 0.61 = 61%

Improving memory bottlenecks

Recommendations for table placement

The decision for each table placement should be made based on the following parameters:

1. Frequency—how often the table is accessed.
2. Size of the table—big tables will not fit in PEB.
3. Availability of bandwidth or place in specific memory.

Some guidelines:

- If DP-DDR is populated, it should be utilized as much as possible up to 60% of bandwidth, in order to reduce pressure on system DDR

For small tables that are used relatively frequently PEB could be the best candidate.

For System DDR, the L3 cache must be enabled in rev1.

For example:

Small (several hundred entries) ACL tables that are accessed per packet at a very high rate (millions times per second) should go to PEB memory.

Big LPM tables that are accessed infrequently should be placed in DP-DDR. The same table that is accessed higher than 60% DP-DDR utilization should be placed in System-DDR.

As a practical approach, we suggest not to use DP-DDR at the first stage of development and leave this optimization for later stages of development.

Recommendations for data placement

Data can be placed in several types of memory:

- System DDR
  - Direct access by core (not recommended) is ~200 cycles
- DP-DDR
  - Direct access by core (not recommnded) is ~200 cycles
- Shared RAM
  - ~10-15 cycles access
- PEB
  - ~40 cycles access by core (not recommnded)

When deciding about placement of different types of data, first consider how this data scales:

- Data scaling with number of flows
  - As number of flows is typically high (more than thousands), it should be placed in DDR
- Frequently accessed data that is scaling as number of interfaces or application instances
  - Such data should be placed in ShRAM (as statically defined data). Exceptions could be made for data that is accessed in bulk. In that case, place the data in PEB, so that it could be brought from DMA to local memory as a whole structure and then several data fields can be accessed with zero latency

8.3.7.4.7 CTLU - Parser

The CTLU or parser becomes a bottleneck of the application when tasks wait for the CTLU or parser for a long time. For example, the trace below shows this situation:

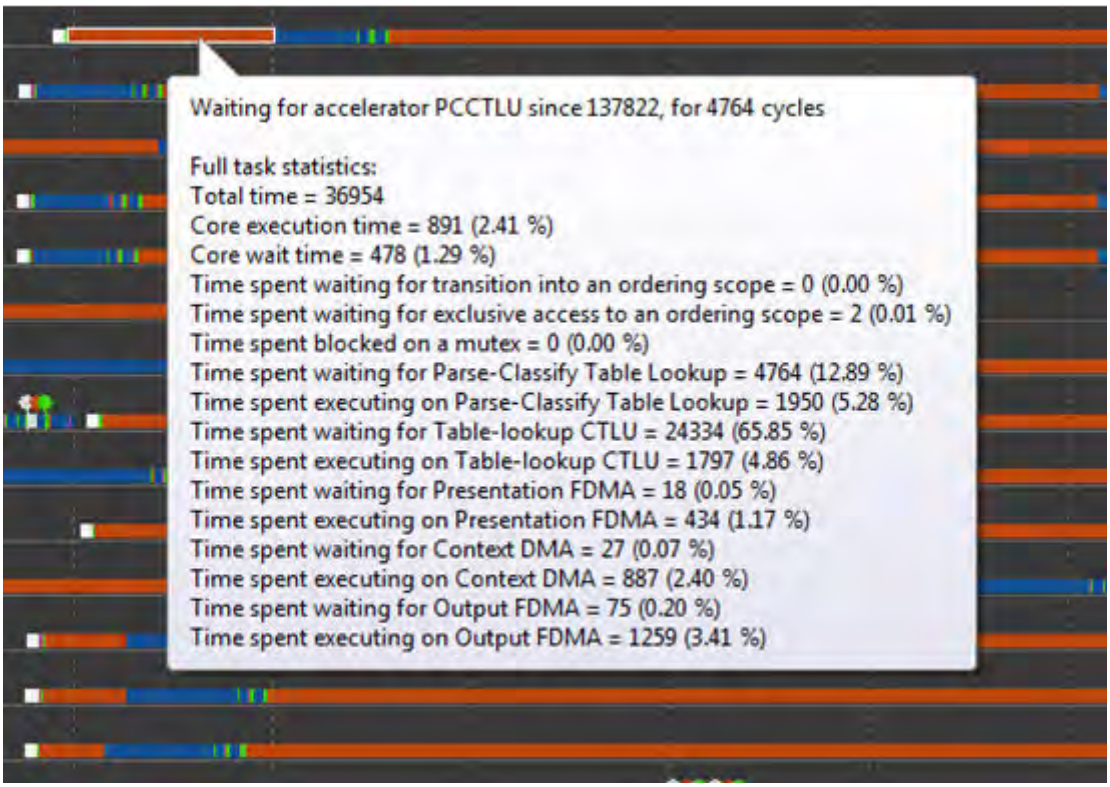

Figure 172. CTLU - Parser Bottleneck Example

Based on the trace above, it is evident that the wait time for the parser (PCCTLU - "Parse Classify CTLU") is very significant. The following are reasons for the long wait time:

- Too many calls to the parser/TLU
- The memory that the TLU works with experiences high load, which results in high latency. For memory issues, refer to the Memory profiling section.

Example task analysis for CTLU usage

Improving CTLU bottlenecks

Listed below are some ideas on how to alleviate load on the parser:

- One of the features of DPNI is to calculate gross running checksum for ingress frames. So, when frame is received form by AIOP, it has associated valid gross running checksum. It is a checksum of the entire frame. Once we change frame data, the checksum becomes invalid unless we update it. If the parser is called with validation flags enabled, and the

gross running sum was set to 0, it will first recalculate the gross running sum of the entire frame. When appropriate, do not invalidate (set to 0) the gross running sum field if the parser will later be called with the validation flags enabled.

- In case a VLAN header was added or removed, it is possible to call the software functions `parser_push_vlan_update()` or `parser_pop_vlan_update()` to update the workspace parse results instead of calling the hardware parser routines. This method should be used when the ratio of calls to the hardware parser routine is beyond the performance capacity. See the AIOP Program Design: Budgets Per Processing Elements section.

8.3.7.4.8 OSM

It is assumed the reader is already familiar with the details of OSM operation and use. Here we are only concerned with refining the use of OSM to enable best performance. It is also assumed the reader has a basic familiarity with the AIOP analysis tool to view what is going on with task/job scheduling within the AIOP.

OSM is used to add order constraints on the scheduling of jobs of a task within the AIOP based on network ordering requirements of the packet being processed. Therefore the goal in optimizing performance when using OSM is to minimize how often the task scheduler will block a task's progress based on order constraints. In other words OSM *inhibits* jobs of a task from being scheduled and optimization minimizes the time it does so.

The image below demonstrates using the AIOP analysis tool to show how contention in an ordering scope looks like. The mouse when hovered over the pink bar in Task 251 shows additional information about this phase of a task execution. It shows in this example that the task was blocked for 1412 cycles because it needs exclusive phase of a particular ordering scope but it is blocked because other tasks are ahead of it.

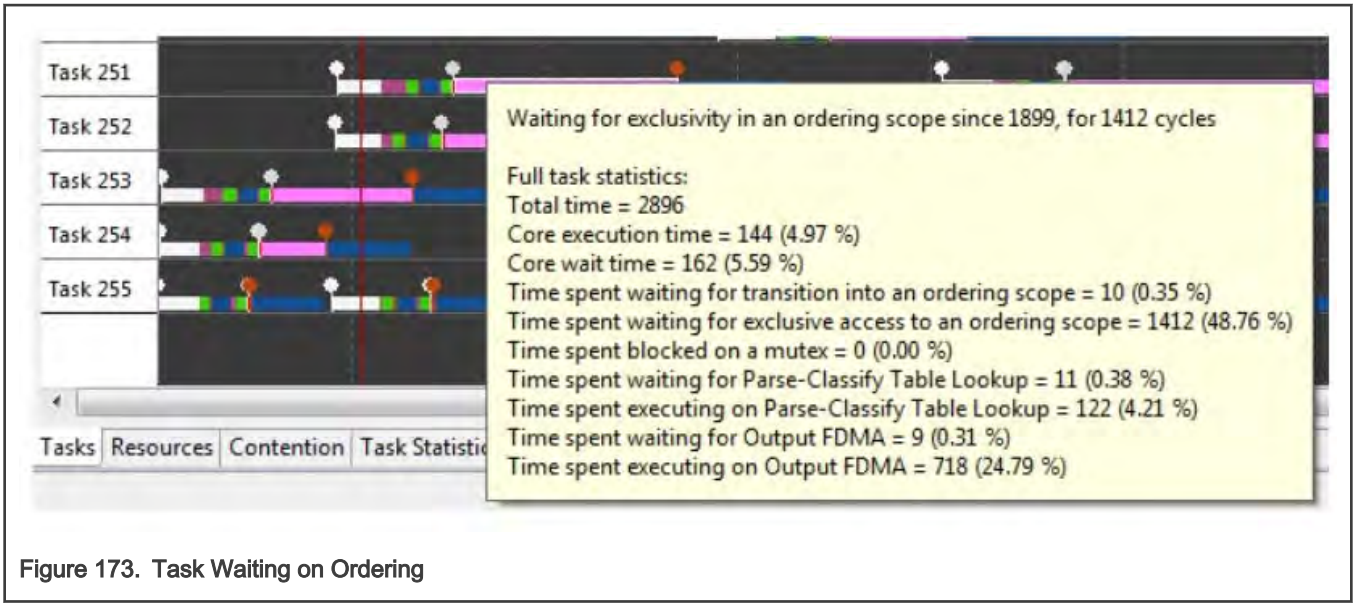

Figure 173. Task Waiting on Ordering

The obvious optimization here is to reduce the number of tasks in the same ordering scope at a given time and to minimize the time each of these tasks keeps the exclusive phase of any ordering scope. An optimized software design will do both as much as possible while remaining correct. Also in a perfect optimization, all tasks would be in different ordering scopes or all tasks would use zero cycles in the exclusive phases of an ordering scope but this is never possible. The AIOP analysis tool will help the software designer to gain experience in the practical use of ordering scopes.

Example task analysis for OSM

Consider a simple example of a task. This task extracts the destination IP address as a key and does a TLU lookup based on that key. The lookup result is a reference to system memory that contains an ARP table entry. The entry is copied from system memory to local workspace. A hit counter in the entry is incremented and the system copy updated to reflect that. The entry also contains a MAC address which is used to replace the destination MAC address in the packet received and then forwarded.

```
key.dst = _presentation_with_vlan.ipv4hdr.dst_addr;
key_desc.em_key = (void*)&key;
```

```
table_lookup_by_key(TABLE_ACCEL_ID_CTLU, tid_arp, key_desc, sizeof(struct
simple_key), &lookup_result);
cdma_read( (void*)&arp_entry, lookup_result.opaque0_or_reference, 16);
arp_entry.hits++;
cdma_write(lookup_result.opaque0_or_reference + offsetof(struct arp_entry, hits),
(void*)&arp_entry.hits, 8);
memcpy(&_initial_presentation.ethhdr.da, &arp_entry.mac, 6);
fdma_modify_default_segment_full_data();
fdma_store_and_enqueue_default_frame_fqid( DESTINATION_FQ, FDMA_EN_TC_TERM_BITS);
```

This is a made up example which does no error checking. Assume from this simple example that forwarded frame is required to be in the same order as the frame arrived on a network interface for any flow. This is not a very realistic example but it will suit the purpose of observing the performance when OSM operations are included.

The simple method to meet the order requirement in this application is to run all packets as if they are in a single flow (single common initial scope ID) and in exclusive mode for the duration.

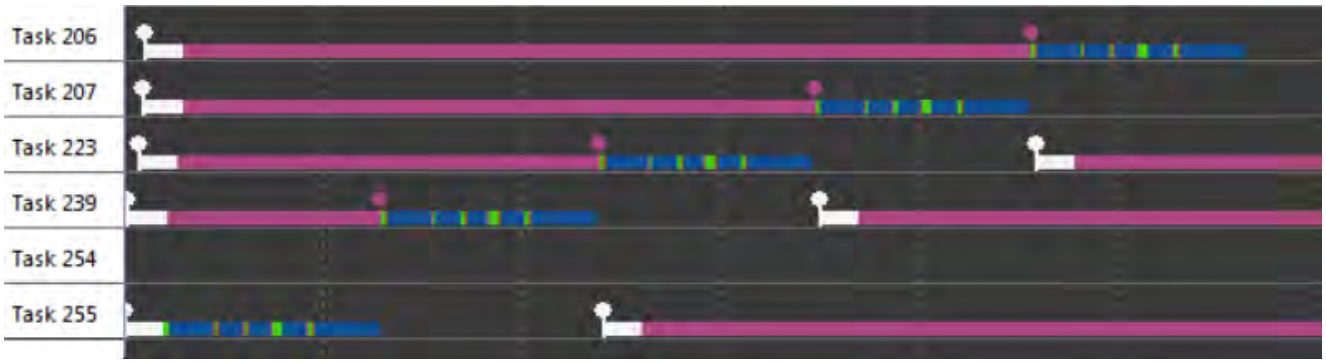

Figure 174. Tasks Executing Sequentially

A snapshot from the AIOP analysis tool shows the result of running all packets as if they are from a single flow in the exclusive phase of a common ordering scope. In this image, blue bars are hardware jobs, green are software jobs, and red is blocked. It is immediately obvious each packet is processed one at a time until done before a subsequent packet starts processing. This is the baseline to improve upon.

Spread based on flow

AIOP tasks will run in parallel more effectively if tasks of different flows begin in different initial scope IDs. In this way they, by definition, do not compete. To demonstrate this, the example of the previous section is repeated, all tasks start as exclusive, but now the packets come from 32 different flows and each flow defines an initial scope ID.

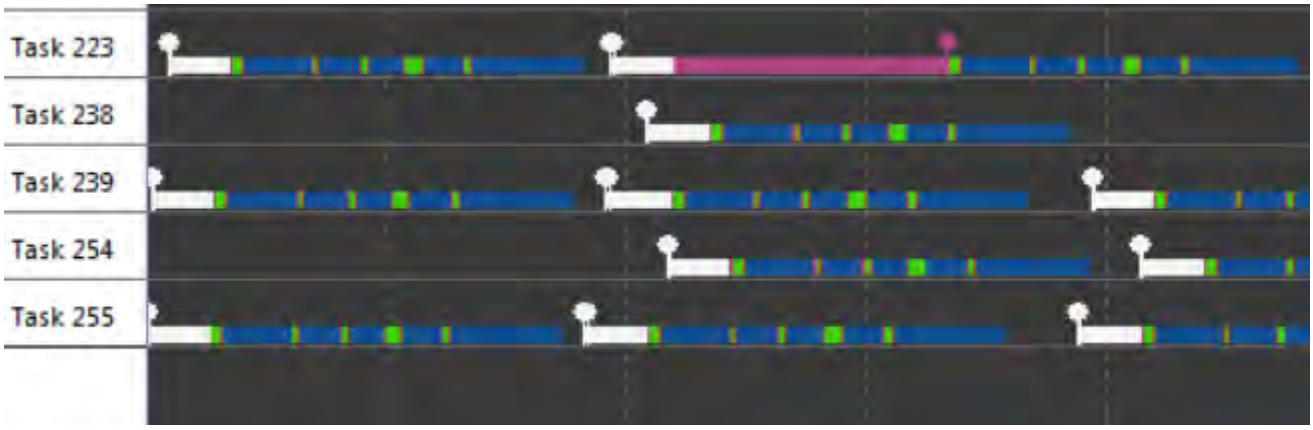

Figure 175. Tasks in Different Flows Running Parallel

As seen from the AIOP analysis tool trace, many operations are occurring in parallel. Both hardware jobs (blue) and software jobs (green) are happening in parallel. In this snippet only one task is observed as blocked. This is the most simple and effective way to improve parallel operation in the AIOP. However, it is never possible to know that ingress traffic will be in a large number of flows at any instant in time.

The DPNI may or may not allow sufficient distribution (spread) of flows. However for every application there is a unique key comprised of header fields to uniquely identify a flow. This unique key is reduced to a hash and used as a new scope ID when classification must be refined within the AIOP. This would be step one of a task and it can be performed in concurrent mode of the initial scope ID to maintain parallel operation.

Either way, if DPNI does or does not provide sufficient spread of flow, it is the application responsibility to pick what header fields uniquely identifies a flow. Use dpni_drv_set_order_scope() to specify initial order scope construction from header fields so that tasks are created with the best possible initial order scope ID. This is the preferred and best performing method. If that is not possible then the user may create a key composition ID (KeyID) from the header fields required during application initialization and use that KeyID to generate a hash suitable for order scope ID after tasks are launched. See key_composition_rule_create().

Run concurrent where possible

In general an AIOP task begins execution in the concurrent phase of the initial ordering scope and delays transition to a subsequent scope in the exclusive phase as long as it is practical. In our example task it is possible to run concurrently up to the point where the ARP table is read and updated. Consider a single flow where our example application runs concurrently and then moves to exclusive after the TLU lookup.

```
osm_scope_transition_to_exclusive_with_increment_scope_id();
```

Figure 176. Tasks in a Flow Blocking for Exclusivity

The TLU will perform lookup operations in an atomic fashion. Take advantage of this characteristic of the AIOP accelerators by using them from a concurrent phase of an ordering scope where ever possible. As can be seen in the AIOP analysis tool snippet, the first hardware job, in this case a TLU lookup, is performed in parallel with other tasks. The remainder of the task is run exclusively and parallel operation ceases.

Relinquish exclusivity quickly

In our example application the read-modify-write of the ARP table entry must be done exclusively. However the MAC address update does not because the data and frame are private to the task. A relinquish exclusivity is inserted following the ARP update and another transition to exclusive is inserted prior to forwarding to remain ordered.

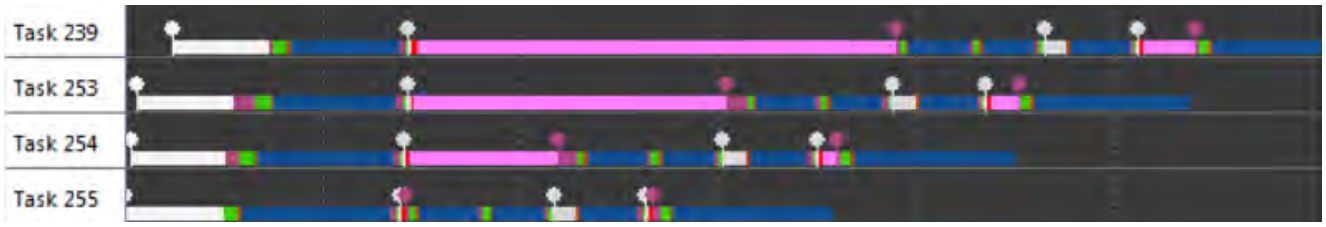

Figure 177. Tasks of a Flow Relinquishing Exclusivity Affect

Consider alternatives

Our example takes advantage of OSM to create an exclusive phase to perform a critical operation, namely to read-modify-write the ARP table entry. Note this is an *ordered* excusive operation. That is tasks will update their ARP entry in the order of packet arrival. In this example the update is just a hit counter and does not require update in order.

It is possible to take advantage of two properties of the hardware accelerators here. First, the sequential update of the ARP entry hit counter can be performed by the STE (statistics engine). Second, the atomic operation of CDMA commands can assure consistent values regardless of other readers or writers. Our example can take advantage of these properties to rewrite our ARP entry handling.

NOTE

The atomic operation of CDMA read and write operations is a specific enhancement over the first revision of the silicon. This atomic behavior allows a reader to be certain a writer will not corrupt an entry; the value read will be valid but not ordered with respect to the writer.

Rewriting this section will look like the following:

```
cdma_read( (void*)&arp_entry, lookup_result.opaque0_or_reference, 16);
ste_inc_counter( (lookup_result.opaque0_or_reference + offsetof(struct
arp_entry, hits)),STE_MODE_64_BIT_CNTR_SIZE);
```

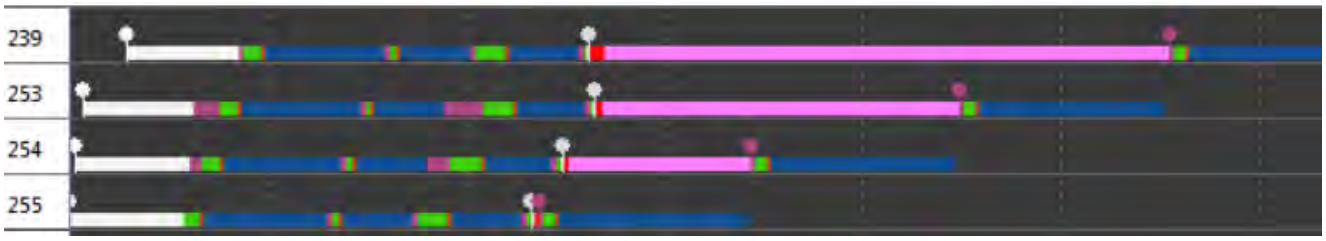

Figure 178. Tasks of a Flow Making Use of Atomic Accelerator Operations

In our alternative method of using STE, all hardware accelerations with the exception of forwarding can now operate in parallel even though all packets are of a single flow. Cycle count for the first four packets forwarding is down to about 3,000 cycles.

OSM Capacity

OSM itself is a resource of limited capacity. To maintain maximum task throughput the number of transitions and enter/exit scope pairs should be limited to a total of about five. Beyond that the maximum task rate will start to decline. It is rare that a task of a complexity to require more than five OSM operations will be limited by OSM before it is limited by other hardware accelerator throughput. However the AIOP analysis tool will be the designer's main insight into where bottlenecks are occurring within the AIOP.

Use osm_scope_enter_to_exclusive_with_new_scope_id() and osm_scope_enter_to_exclusive_with_increment_scope_id() instead which pick the best hardware options by default and have little software overhead

Additional Guidelines

Experience with insight provided by using the AIOP analysis tool will guide the user to best practices for improving parallel operation and relieving bottlenecks.

- Primarily use transition increment forms of OSM commands as they are the best performers and naturally partition an application's overall design into steps from ingress to egress.
- Reduce cycles in exclusive phases as much as possible.
- Use accelerators in concurrent phases as much as possible.
- Create new scope IDs to refine (distribute) flows.

- Take advantage of atomic accelerator characteristics in concurrent phases.
- Avoid using the osm_scope_enter() function as its many options and overhead take many cycles.
  - Use osm_scope_enter_to_exclusive_with_new_scope_id() and osm_scope_enter_to_exclusive_with_increment_scope_id() instead which pick the best hardware options by default and have little software overhead
- Consider splitting a long operation requiring the exclusive phase into multiple exclusive phases.

These are only guidelines to consider while experience will guide the designer. The AIOP analysis tool gives insight into the behavior of tasks. Often times the interaction between decisions is not obvious and some trial and error is required for best results.

8.3.7.4.9 Statistics Engine

The statistics engine will stall the core when it is overloaded. It is relatively easy to see this scenario on trace – core jobs will become much longer around statistics engine (STE) calls and the IPC will go down. In order to isolate an STE bottleneck, remove some STE calls and measure the IPC of the application. If the IPC grows significantly, then an STE bottleneck is being experienced.

Below are important rules that developers need to be aware of when implementing statistics counters on AIOP during the design stage of an application. The most important factor that these rules address is DDR bandwidth limitation.

1. Though seemingly simple, it is important to use as few counters as possible. Reduce counters if possible, and make counters optional where possible.
2. Frequently used counters should not be placed in DDR but rather in internal memory (PEB or ShRAM in some cases).
3. If the context is not “read-only” and a lock of some sort (mutex or OSM based) is taken, it is good practice to put counters in that context and update them by the core without using STE (statistics engine). Similarly, if the number of counters is big, it is good practice to update them using the CDMA engine.
4. Use compound STE operations, which allows two counters to be updated in one operation.

There are restrictions on alignments of counters that the STE API has to follow. It can be found at STE section of AIOP Service Layer API Reference Manual.

8.3.7.4.10 IP Fragmentation (IPF)

For best performance it is recommended to work concurrently, and move to Exclusive Mode (XX) ordering only before enqueuing the last fragment. From this point (moving to exclusive before enqueue of the last fragment) transition to concurrent is not allowed. This way fragments of different frames will be interleaved but ordering will be kept between the last fragments of different frames.

8.3.7.4.11 IP Reassembly (IPR)

- Ordering scope
  - Call the IPR in Concurrent mode (XC)
  - Do a per-frame flow distribution, according to the IP identification field
  - Have at least two available OSM scope levels when calling IPR
- Place the lookup tables on the PEB memory
- The input frame (fragment) should be stored in a single buffer
- The frame buffer size should be larger or equal to (16 * <max number of fragments>) + any offset, headroom and annotation
- API configuration parameters
  - Do not enable external statistics
  - Use timeout mode to be per reassembled frame

- Send in-order fragments (relevant to the sender side, usually in closed systems)

Table 141. IPR configuration options for best performance

Flags and options	Best Performance
IPR_MODE_TABLE_LOCATION_PEB	Set
IPR_MODE_EXTENDED_STATS_EN	Cleared
IPR_MODE_IPV4_TO_TYPE	Set
IPR_MODE_IPV6_TO_TYPE	Set

8.3.7.4.12 IPSec

IPSec module supports IPSec encaspulation and decapsulation as a part of service layer. There are several ideas on how to achive the best performance for IPSec:

- Use tunnel mode.
- Use IPv4 frames and outer header.
- Do not enable transport mode pad check.
- Do not use the DSCP set option for tunnel mode.
- Use the system DDR as the IPsec FM context memory (currently not programmable).
- Do not enable UDP encapsulation in transport mode
- Enable reuse buffer mode

The following table describes the IPsec functional module configuration parameters value for achieving the best performance.

Table 142. IPsec Configuration Options for Best Performance

Flags & options	Best performance
IPSEC_FLG_TUNNEL_MODE	Set
IPSEC_FLG_TRANSPORT_PAD_CHECK	Cleared
IPSEC_FLG_BUFFER_REUSE	Set
IPSEC_ENC_OPTS_NAT_EN	Cleared
IPSEC_ENC_OPTS_NUC_EN	Cleared
IPSEC_FLG_ENC_DSCP_SET	Cleared
IPSEC_FLG_LIFETIME_KB_CNTR_EN	Cleared
IPSEC_FLG_LIFETIME_PKT_CNTR_EN	Cleared
IPSEC_FLG_LIFETIME_SEC_CNTR_EN	Cleared
IPSEC_OPTS_ESP_ESN	Cleared
IPSEC_OPTS_ESP_IPVSN	Cleared
IPSEC_DEC_OPTS_ARSNONE	Set
IPSEC_DEC_OPTS_ARS32	Cleared
IPSEC_DEC_OPTS_ARS128	Cleared
IPSEC_DEC_OPTS_ARS64	Cleared

8.3.7.4.13 Appendix A

DDR bandwidth measurement

The Scenarios Tools allows a real time measurement of DDR bandwidth for all the controllers. Use this tool as a help guide for the configuration procedure.

As an example, in the LS2085A, there are three DDR controllers. In ***Scenarios Tools*** those are called DDRC1, DDRC2 and DDRC3.

DDRC1 and DDRC2 are for system memory and DDRC3 is for DP-DDR.

Add the utilization measurement as shown below, then press the green “Launch” button in the toolbar.

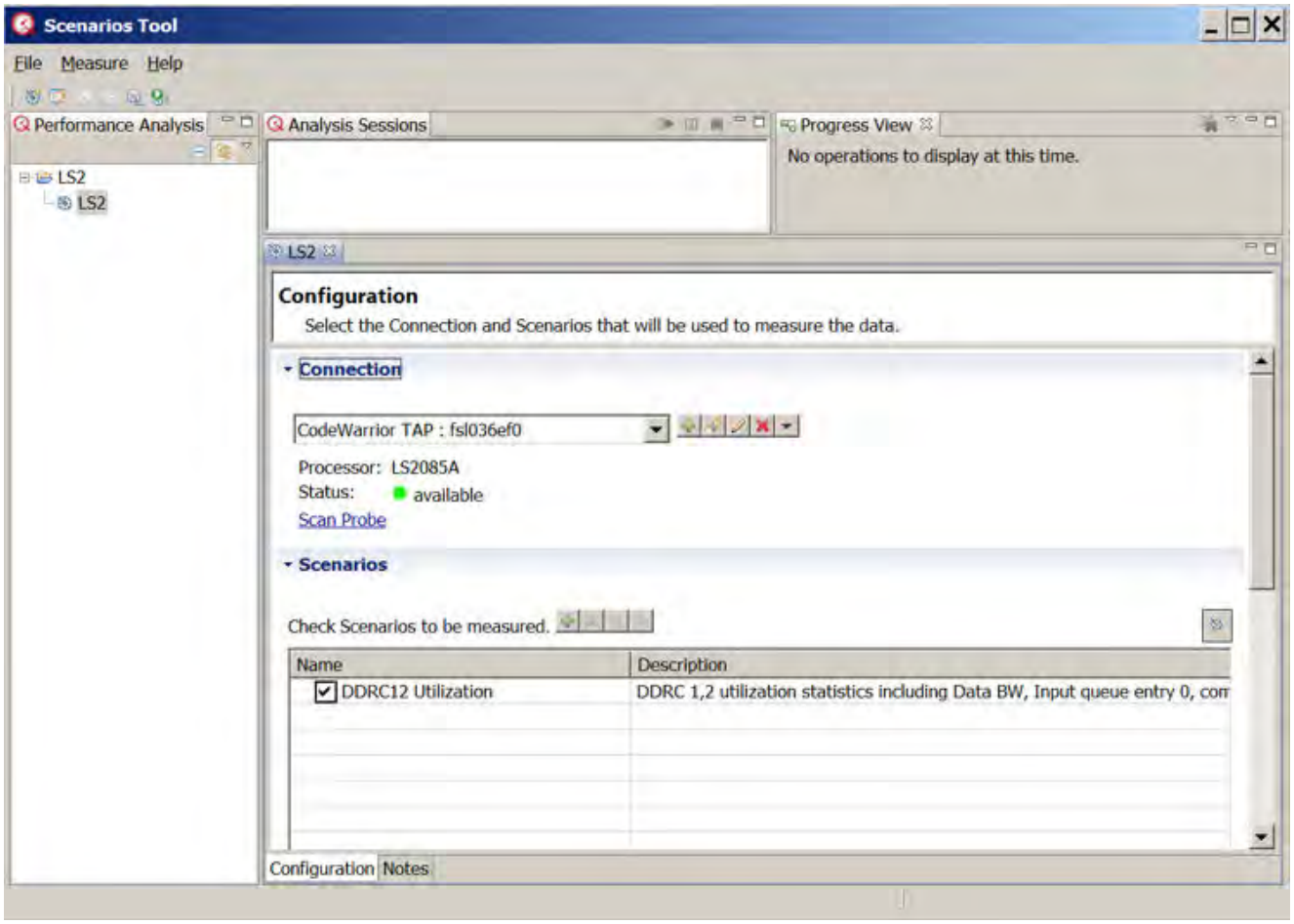

Figure 179. Utilization Measurement in Scenarios Tool

The measurement will complete in a few seconds, and the table of results will be displayed, as shown below.

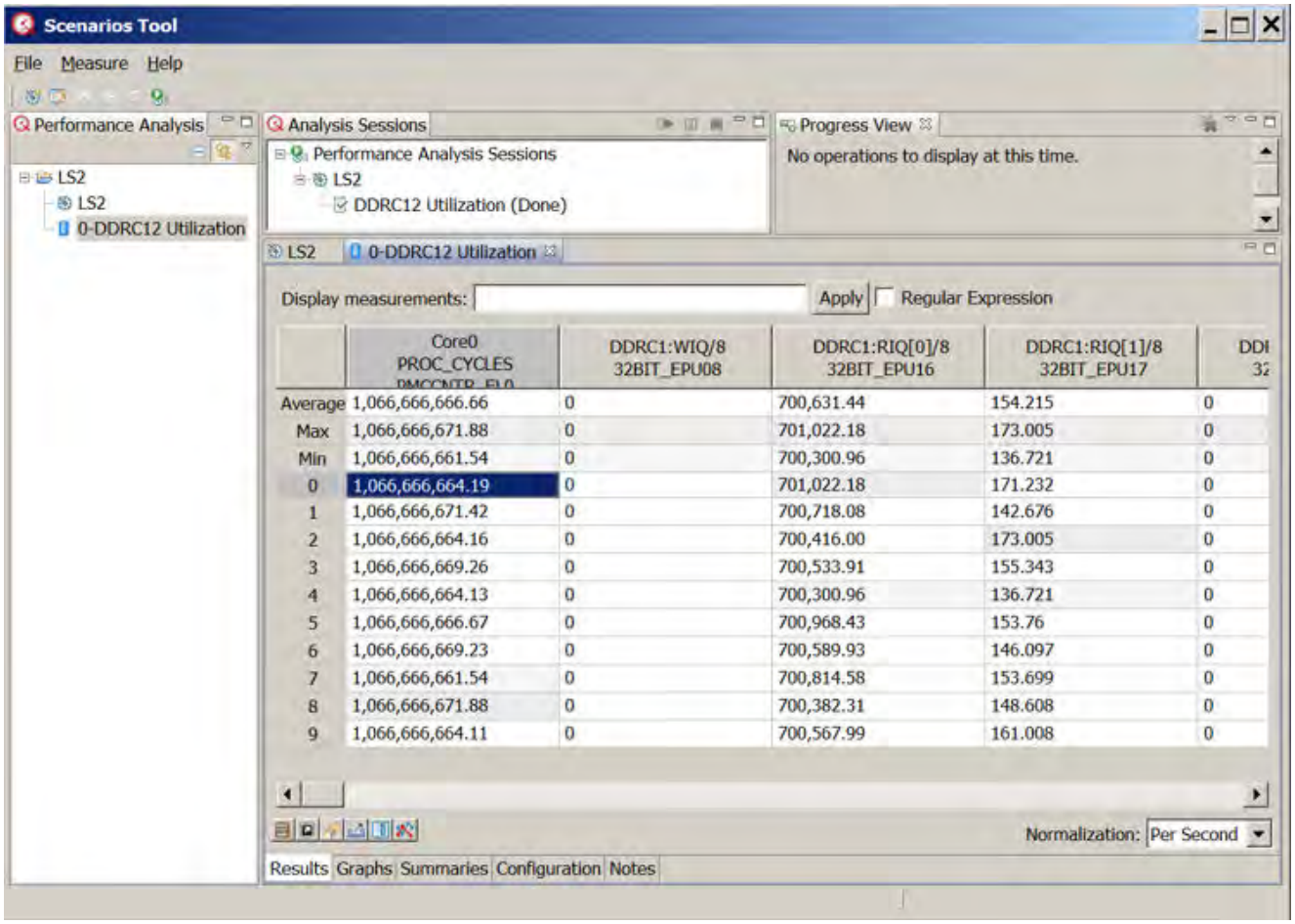

Figure 180. Utilization Measurement Table of Results

The initial table display will show all measured events and metrics. Use the Measurement Chooser dialog to select the measurements of interest, in this case the utilization metrics.

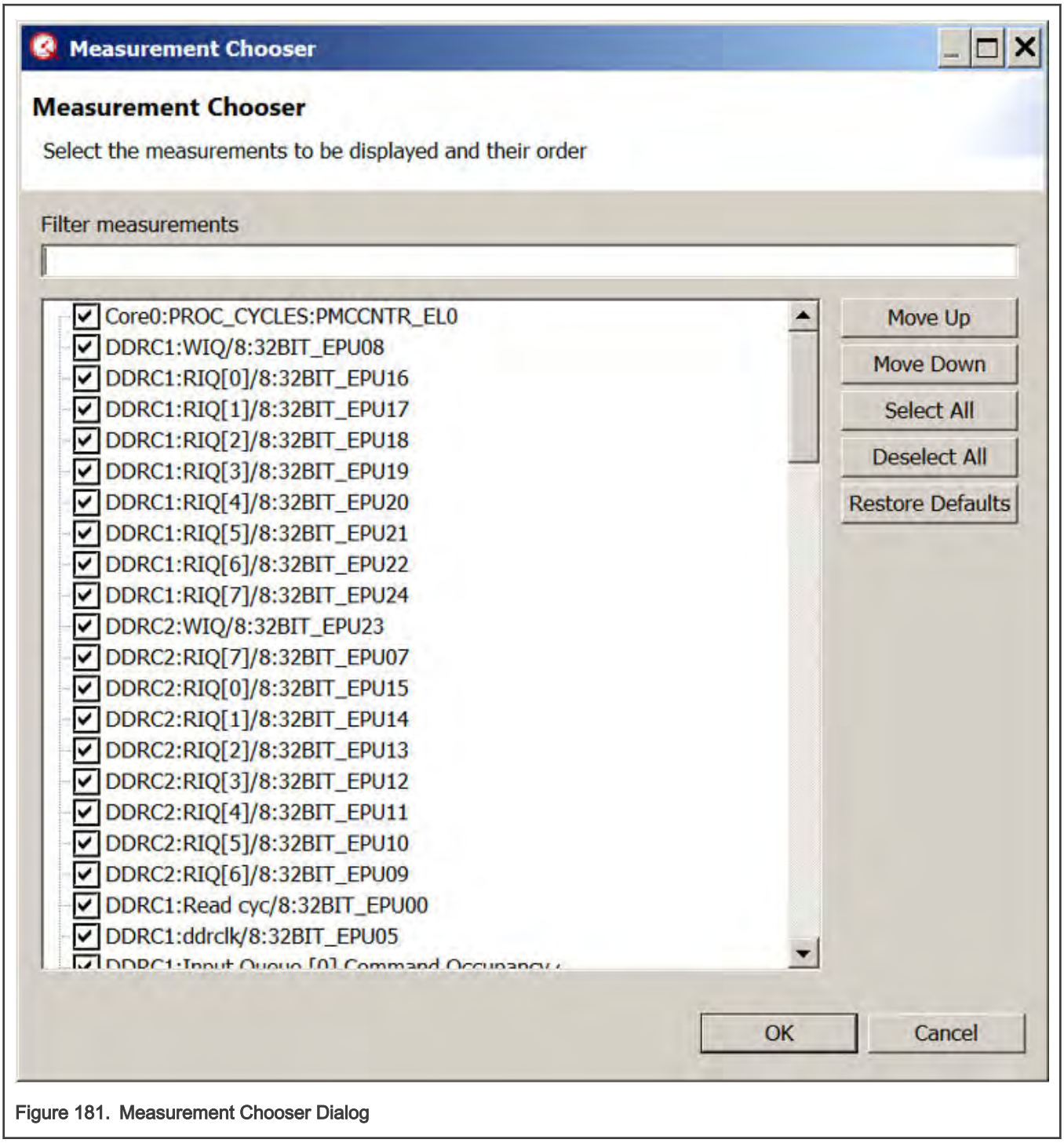

Figure 181. Measurement Chooser Dialog

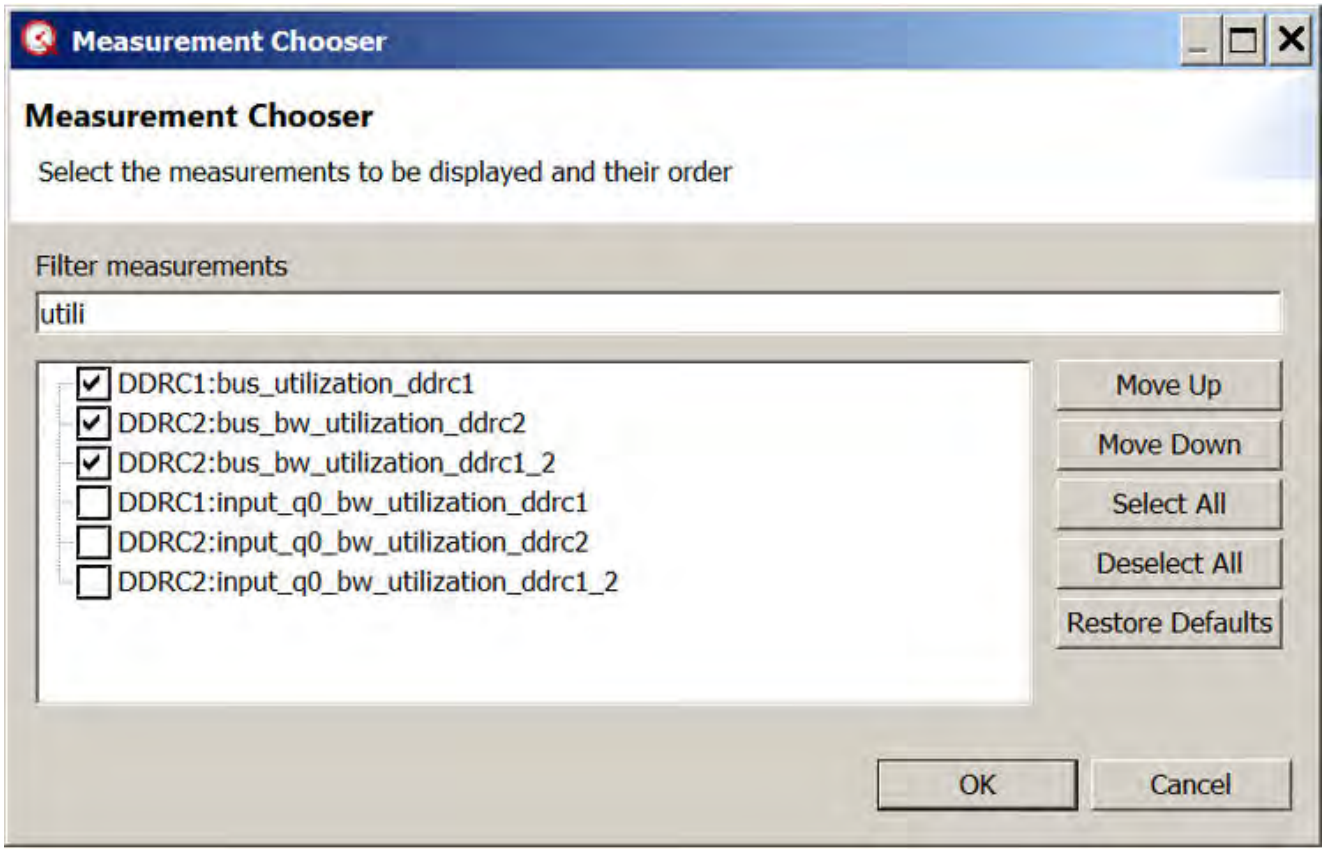

Figure 182. Selecting Utilization Metrics

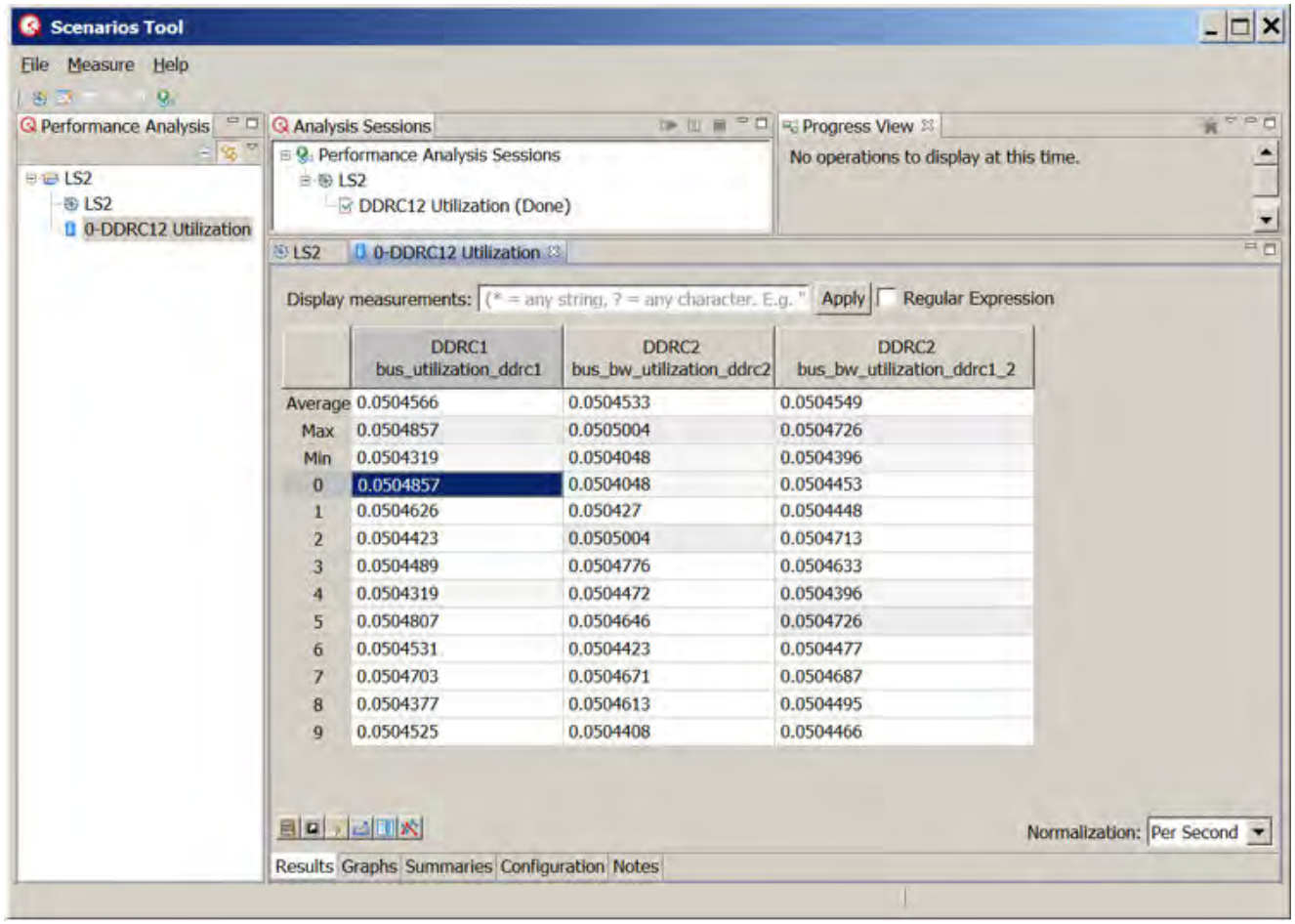

Figure 183. Example of DDR Utilization

In last figure, observe that DDR1 and DDR2 are only 5% utilized. Generally, utilization of lower than 65% is considered to be low and not affecting latency.

8.3.7.5 AIOP Service Layer API Reference Manual

Click here to access the AIOP Service Layer API Reference Manual PDF.

8.4 Packet Forward Engine (PFE) Network Driver

8.4.1 Introduction

8.4.1.1 Overview

This section describes the Linux driver which enables support for Ethernet on Packet Forward Engine (PFE) hardware. EMACs are part of PFE IP, to receive/transmit packets through EMAC interface it should be accessed through PFE interface by programing it.

8.4.1.2 Purpose

The purpose of this section is to provide a user guide and configuration details for the PFE driver, and a high-level view of the driver's structure, as well as to describe its major functionalities with a focus on the features provided by the PFE IP.

8.4.1.3 Features

This section provides an overview of the major PFE features:

- MAC Layer.
- MAC Address Filter.
- Interrupt for Tx/Rx packets.
- Scatter/Gather support.
- Interrupt coalescing.
- TCP/UDP checksum verification and generation.

8.4.2 High level decomposition and data flow

A system level block view, from a network device perspective, may be depicted as follows:

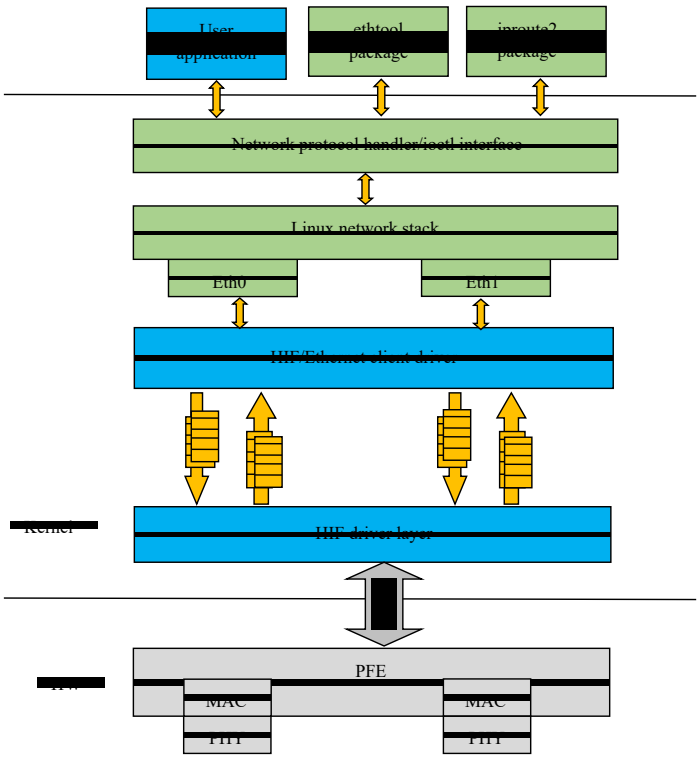

Figure 184. High level decomposition and data flow block level view

The PFE, MAC and PHY are the hardware blocks, the kernel networking stack along with the network driver are running in the Kernel space, and finally ethtool and iproute2 are examples of user space tools used for configuring the network devices.

The PFE hardware supports one HIF RX and TX descriptor queues to send and receive packets through PFE. Both network interface traffic is multiplexed and send over Host Interface (HIF) queue.

User space packages like ethtool and iproute are used to configure the network device parameters. The ethtool interface is extended to provide support for filer programming. The kernel space module for the network driver is the most important block as it communicates with both the user space and the H/W IP to control the processing of packets.

The basic functionality of any Ethernet driver is to handle the reception of packets from an ingress port (might include checksum calculation, header verification, etc), as well as the transmission of packets on the egress port (might include checksum re-calculation, header manipulation, etc). There are also the device configuration and control functionalities, and device status

reporting. When the Ethernet driver is actually implementing these functionalities, it needs to interact with the core (Kernel) as well as the hardware IP (the Ethernet controller).

The PFE Linux kernel module has following two main parts:

- **HIF driver layer:**This part of the driver talks with HIF hardware interface and send and receive the packets from it. It receives packets from HIF interface and identifies from which MAC interface it received and send the packet to corresponding client driver queue. Similarly, if there is any pending packet from client queue to transmit packet it takes and inserts the HIF header and put it into the HIF queue. It uses the NAPI to receive packets and send it to corresponding client queues and triggers client to process packets from the queue.
- **HIF/Ethernet client driver:** Ethernet client driver is a hardware independent driver and registers with the HIF driver to transmit and receive packet through HIF interface. For each interface one instance of client driver should be register with the HIF driver layer, other side it registers with Linux kernel stack as network interface. Each client driver will have software queues to communicate with HIF driver layer. Each client driver registers with NAPI and indicate packets to the stack through the NAPI poll.

8.4.3 NAPI support

PFE HIF driver layer uses NAPI handling for Rx path processing, the Linux polling mechanism being triggered by frame receive interrupts. The driver registers irqs for receive and the NAPI (polling) handlers are provided to the Kernel. Similarly, HIF Ethernet client driver also uses NAPI handling to processes software queues and pass them to the Kernel Network stack.

On the receive path:

- When the receive interrupt gets triggered, a softirq for the polling function on Rx is scheduled.
- The RX_SOFTIRQ thread is raised by the Kernel, and the HIF Rx queues will be processed by the driver's polling function and the incoming packets are being passed to client Rx queues and triggers the client NAPI handling.
- HIF/Ethernet client NAPI poll receives packets from client Rx queues and passes to the Network stack.

8.4.4 Interrupt coalescing

On a high speed network interface the rate of packet reception and transmission can be as high as the CPUs would be spending most of the time servicing these interrupts. With the interrupt coalescing feature, packets are collected and one single interrupt is generated for multiple packets to avoid flooding the system with interrupts from the Ethernet device.

PFE hardware supports hardware coalescing for receive interrupts, complemented by timer-based thresholds. PFE driver provides basic support for setting the coalescing parameters via ethtool -C by implementing the “rx-usec” option.

8.4.5 Checksum offloading

For large frames, offload of checksum verification saves a significant fraction of the CPU cycles that would otherwise be spent by the TCP/IP stack. IP packet fragmentation and re-assembly, and TCP stream establishment and tear-down are not performed in hardware.

On Tx side, PFE hardware provides IPv4/IPv6 and TCP/UDP header checksum generation. On the Rx side, PFE driver lets the Kernel know that checksum verification is not required if valid IP headers or TCP/UDP headers were found and valid sums were verified, by setting the CHECKSUM_UNNECESSARY flag. On Tx side, the checksum is generated (offloaded) for TCP/UDP packets over IPv4 based on the pseudo-header checksum (phcs) provided by the Linux networking stack. PFE Linux driver instructs the stack about its ability to provide partial checksumming, based on the phcs for TCP/UDP packets, by setting the NETIF_F_IP_CSUM device capability flag. PFE hardware doesn’t support per packet based checksum calculation control, it should be enabled or disabled for all packets.

8.4.6 Scatter gather support

Scatter-Gather I/O is a method by which a single procedure call sequentially writes data from multiple buffers to a single data stream or reads data from a data stream to multiple buffers. The buffers are given in a vector of buffers. Scatter/gather refers to the process of gathering data from, or scattering data into, the given set of buffers. The I/O can be performed synchronously or asynchronously to this procedure.

On the Tx side, PFE HIF interface supports "gathering" big packets from multiple buffers. This ability is signaled by the driver to the Linux network stack by setting the NETIF_F_SG device hardware feature flag. The driver takes into account the number of fragments composing the packet that is going to be transmitted, and places each fragment into consecutive BD ring buffers before issuing the command to start sending the frame.

On the Rx side, the PFE HIF interface is capable of "scattering" big packets into multiple fixed size buffers having consecutive buffer descriptors (BDs).

8.4.7 Ethtool support

Non-exhaustive list of the most notable ethtool commands implemented by PFE Linux driver:

`-C | --coalesce DEVNAME [rx-usecs N]`

Sets Rx interrupt coalescing in microsecs(‘usecs’).

`-K | --offload DEVNAME`

Sets UDP/TCP checksum offloading enabled or disabled.

- `rx on|off` - Specifies whether RX checksum is enabled or disabled.
- `tx on|off` - Specifies whether TX checksum is enabled or disabled.

`-S | --statistics DEVNAME`

Queries the specified network device for NIC- and driver-specific statistics.

`-s DEVNAME`

Allows changing some or all settings of the specified network device. All following options only apply if -s was specified.

- `wol g` - Sets Wake-on-LAN options. The argument to this option is a string of characters specifying which options to enable.

`-A|--pause devname`

[tx on|off] Specifies whether TX pause should be enabled.

8.5 Linux Ethernet Driver for eTSEC

8.5.1 Linux Ethernet Driver for eTSEC

8.5.1.1 Introduction

8.5.1.1.1 Overview

Gianfar is the Linux driver that enables Ethernet support for the SoCs featuring eTSEC (Enhanced Three-Speed Ethernet Controllers). Though the driver is designed to support the latest eTSEC2.0 features present on the low-power QorIQ platforms, it also maintains backward compatibility with older IPs from the same family, like eTSEC (eTSEC 1.x) and TSEC (present on the PowerQUICC III platforms) and FEC (Fast Ethernet Controller).

8.5.1.1.2 Purpose

The purpose of this document is to provide a user guide and configuration details for the Gianfar driver, and a high-level view of the driver’s structure, as well as to describe its major functionalities with a focus on the features provided by the eTSEC2.0 IP.

8.5.1.1.3 Features

This section provides an overview of the major eTSEC2.0 (“virtualized” eTSEC) features:

- o MAC Layer
- *o Interrupt grouping mechanism*

- *o Virtualized register space*
- o Rx Subsystem:
  - MAC Address Filter
  - L2/L3/L4 Parser
  - Filer Engine
  - *Hash or RR Distribution*
  - *Multiple Rx Interrupt*
- o Tx Subsystem:
  - Tx Scheduler
  - L3/L4 Offload
  - *Multiple Tx Interrupt*

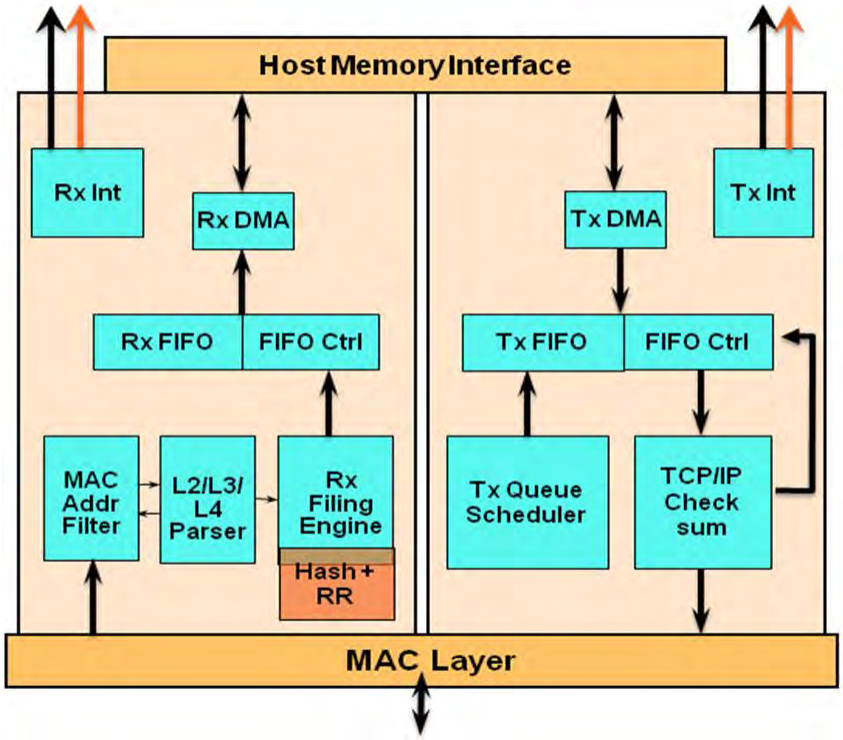

Figure 185. "Virtualized" eTSEC Block Diagram

- *o Interrupt virtualization:*
  - Each ring maps to one of two separate groups for interrupt and BD management; each group associated by software with a CPU.
  - Separate address spaces per group and for MDIO.
  - Interrupt coalescing controls per ring in multi-group mode, packet-count based and timer based thresholds, for both Rx and Tx.
- *o TCP/IP Offload Engine (TOE):*
  - IP v4 and IP v6 header recognition on receive

— IP v4 header checksum verification and generation

— TCP and UDP checksum verification and generation

— Per-packet configurable offload

— Recognition of VLAN, stacked-VLAN, 802.2, PPPoE session, MPLS stacks, and ESP/AH IP-Security headers

- *o Quality of service (QoS) support:*

— Transmission from up to eight queues: priority-based queue selection or modified weighted round-robin (MWRR) queue selection with fair bandwidth allocation

— Reception to up to eight physical queues:

- Table-oriented queue filing strategy based on 16 header fields or flags

- Frame rejection support for filtering applications

- Filing based on Ethernet, IP, and TCP/UDP properties, including VLAN fields, Ether-type, IP protocol type, IP TOS or differentiated services, IP source and destination addresses, TCP/UDP port number

8.5.1.1.4 Notes on high level decomposition and data flow

A system level block view, from a network device perspective, may be depicted as follows:

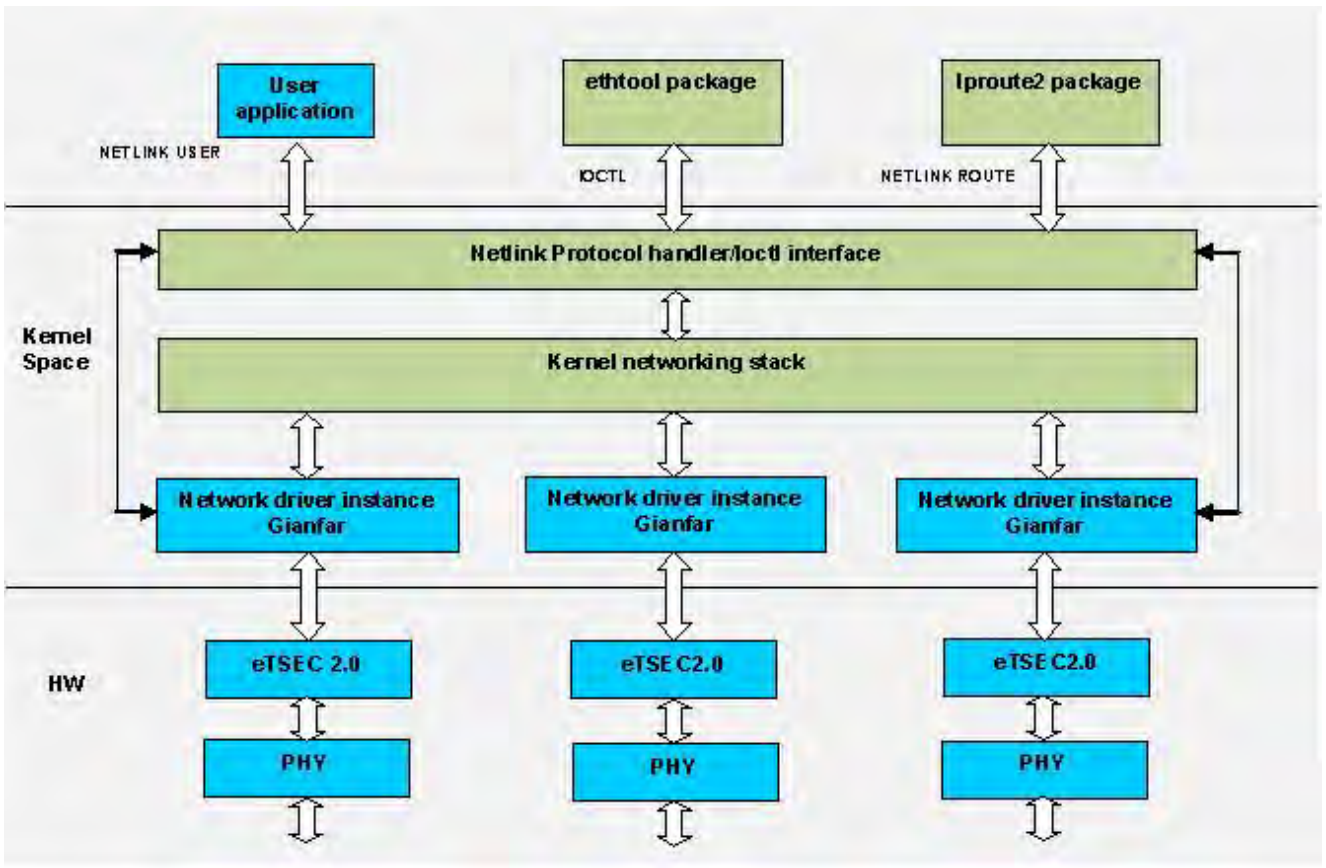

Figure 186. Gianfar High level decomposition

The eTSEC2.0 and PHY are the hardware blocks, the kernel networking stack along with the network driver are running in the Kernel space, and finally ethtool and iproute2 are examples of user space tools used for configuring the network devices.

The eTSEC2.0 includes some additional support compared with the previous versions:

- it has support for interrupt virtualization
- on the TX side, it can distribute packets to the multiple queues based on simple hashing or round robin mechanisms

The eTSEC2.0 has support for multiple RX and TX queues. On the receive side, an incoming packet will be filed to one of the queues based on the rules programmed into the filer. By default, all the packets will be filed to queue 0. On the transmit side, either a simple hash based implementation or a round robin algorithm distributes the packets to the available number of queues. User space packages like ethtool and iproute are used to configure the network device parameters. The ethtool interface is extended to provide support for filer programming.

The kernel space module for the network driver is the most important block as it communicates with both the user space and the H/W IP to control the processing of packets. The eTSEC network device driver will be referred to as Gianfar in the rest of the document.

The Gianfar driver may be divided into sub-blocks based on the number of independent threads that Linux will run in order to completely transfer a packet from ingress to egress side. The basic functionality of any Ethernet driver is to handle the reception of packets from an ingress port (might include checksum calculation, header verification, etc), as well as the transmission of packets on the egress port (might include checksum re-calculation, header manipulation, etc). There are also the device configuration and control functionalities, and device status reporting. When the Ethernet driver is actually implementing these functionalities, it needs to interact with the core (Kernel) as well as the hardware IP (the Ethernet controller).

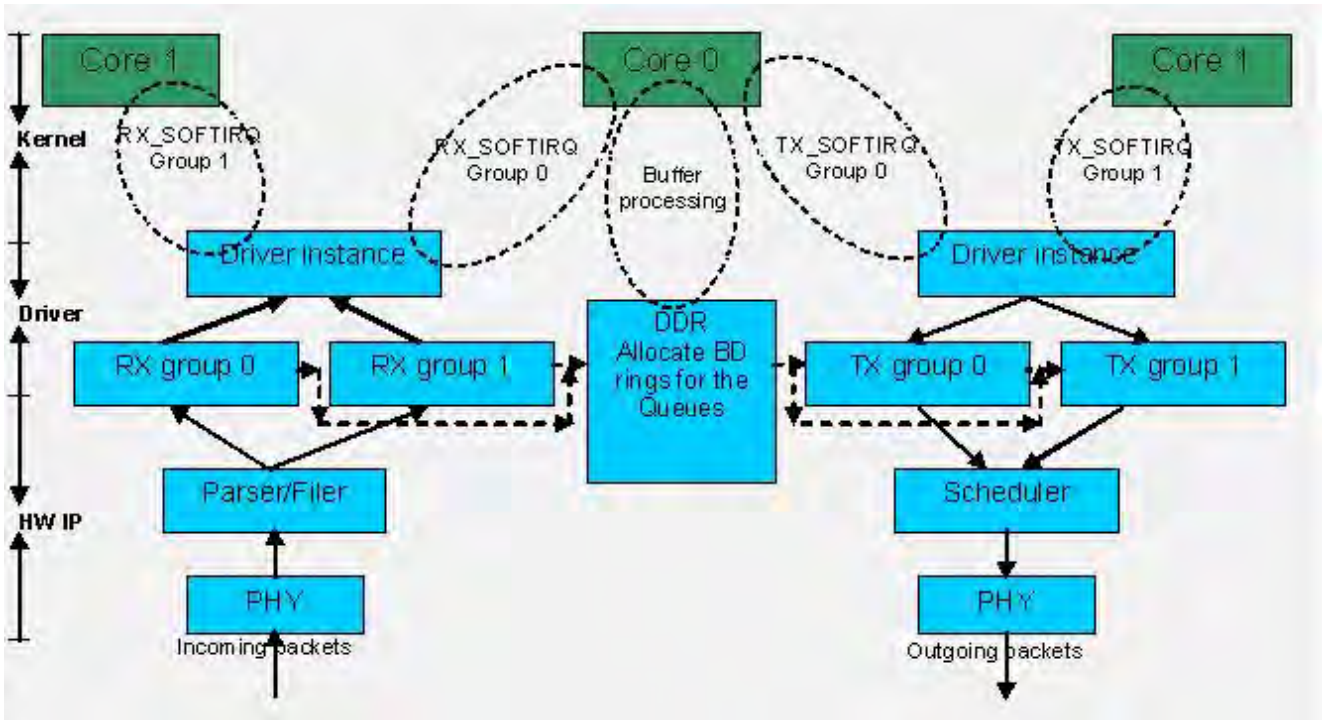

Figure 187. Gianfar Packet Flow

In the above Figure it can be noted that the receive side includes parsing/ filing before a packet is "put" into a buffer descriptor. The transmit side includes a H/W queue scheduler for transmission of packets.

As already mentioned, eTSEC2.0 has support for multiple hardware queues for Rx and Tx in hardware. These queues are basically divided into two groups; let's say all odd numbered queues correspond to one group and even numbered queues correspond to other group. In a multi core environment (e.g. a dual core system), each group of queues can be programmed to be handled by one of the two cores, which will result in an increased performance.

For simplicity, we always assume that:

- All the even numbered queues are mapped to Group 0 and odd numbered queues are mapped to Group1.

- Group 0 interrupts can be assigned to be processed by Core 0 and Group 1 interrupts to be processed by Core 1 (except for error the interrupts, which are always destined to Core 0, which is the master core).

From the above figure, it can be noticed that there will be a receive, and a transmit thread running on each core, for processing the packets corresponding to the group assigned to that core. The receive thread processes the received packets - handles the RX buffer descriptor (BD) rings, and passes the received packets to the networking stack for further processing; the transmit thread schedules the packets passed down by the stack to be transmitted out of the device. There's also a transmission cleanup thread, triggered by the TX confirmation interrupts, to handle the TX BD rings and congestion.

Gianfar may be broadly decomposed into the following sub-blocks:

1. Initialization block
2. Receive block
3. Transmit block
4. Control block

So, the Receive and Transmit blocks handle processing of ingress and egress packets.

Before processing packets the driver needs to perform some initialization steps like:

- extracting the device tree parameters
- initialization of the multiple queues
- registering the driver with the kernel
- allocating buffer descriptors
- registering the interrupts (etc.)

All these functionalities are implemented by the Initialization block.

Each of these sub-modules implements various functionalities, as detailed in the coming section.

8.5.1.2 Functionality

8.5.1.2.1 Multi-Queue support

eTSEC features multiple physical queues or BD rings. The multi-queue support (MQ) in the driver is enabled by default for eTSEC2.0 IPs.

Hardware queue events are mapped to one of the two available CPUs via eTSEC *Interrupt Groups*. For eTSEC2.0, each Rx/Tx hardware queue or BD ring is mapped to one of the two available Interrupt Groups, and each group in turn has its Rx/Tx interrupt lines assigned to a given CPU. By default, the driver enables 1 Rx and 1 Tx queue per Interrupt Group.

eTSEC2.0 supports 2 Interrupt Groups, this is also known as the Multi-Group (MG) mode in Gianfar. Each group has its own Rx, Tx and Err interrupt lines which can be individually affined to any of the 2 CPUs, as a measure to balance the processing load. Also, each interrupt group has its own block of registers, most notably `ievent`, `imask`, `tstat`, and `rstat`, so queue events are handled at the interrupt group level. Having more than 1 Rx and 1 Tx queue assigned to a single interrupt group would thus incur a software processing overhead that would not be justifiable for the majority of use cases. This is why the driver enables by default only 1 set of Rx and Tx queues per Interrupt Group.

eTSEC1.x and other older eTSEC IPs support only one interrupt group (g0), meaning that they are working in Single Group (SG) mode.

The mapping Rx/Tx queues to interrupt groups is by default: Rx Q0 and Tx Q0 assigned to Group0 (`g0`), and Rx Q1 and Tx Q1 assigned to Group1 (`g1`).

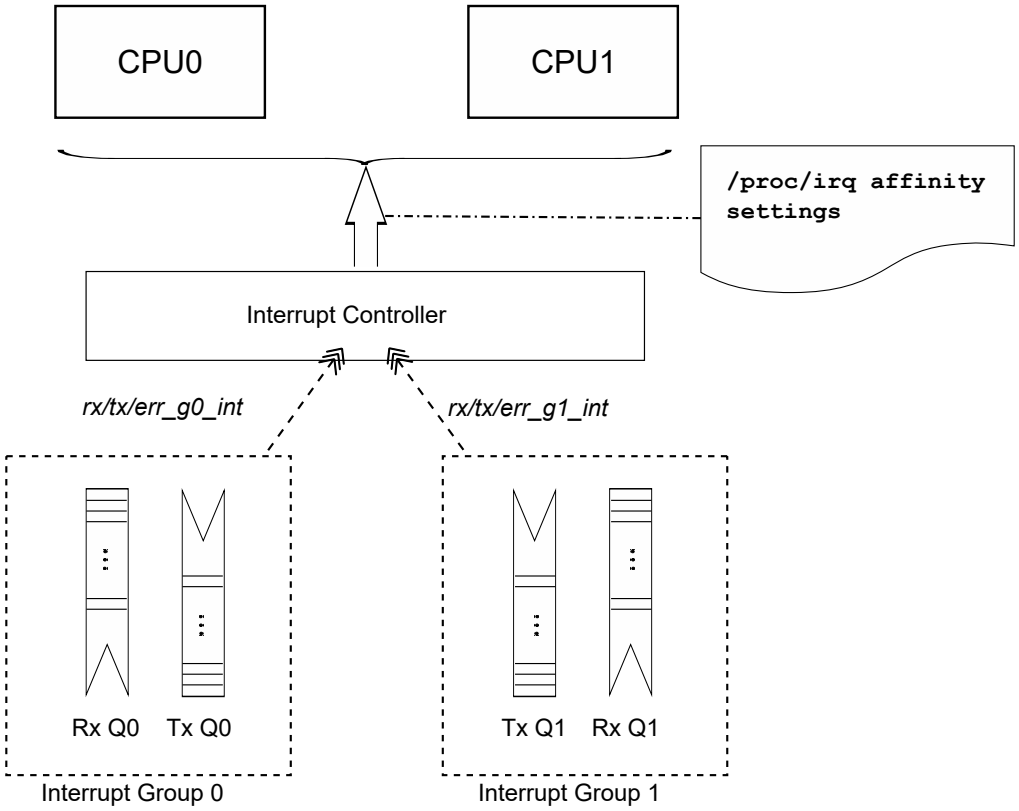

Figure 188. Multi-Queue Multi-Group

NOTE

Supporting more than one Rx/Tx queue per interrupt group has been obsoleted (see above). As a result, the following device tree properties are *obsolete*: `fsl,num-rx-queues`, `fsl,num-tx-queues`, `fsl,rx-bit-map`, and `fsl,tx-bit-map`.

8.5.1.2.2 Receive Side Scaling support

eTSEC supports multiple Rx and Tx descriptor queues (see multi-queue support). On reception, eTSEC can send different packets to different queues to distribute processing among CPUs. This mechanism is generally known as “Receive-side Scaling” (RSS).

In Gianfar, packets are distributed by applying "n-tuple" filters configured from `ethtool -N` (`--config-ntuple` option). These filters are converted by Gianfar to eTSEC Filer H/W rules. Based on these programmable filters, each packet is assigned to one of a small number of logical flows. Packets for each flow are steered to separate receive queues, which in turn can be processed by separate CPUs.

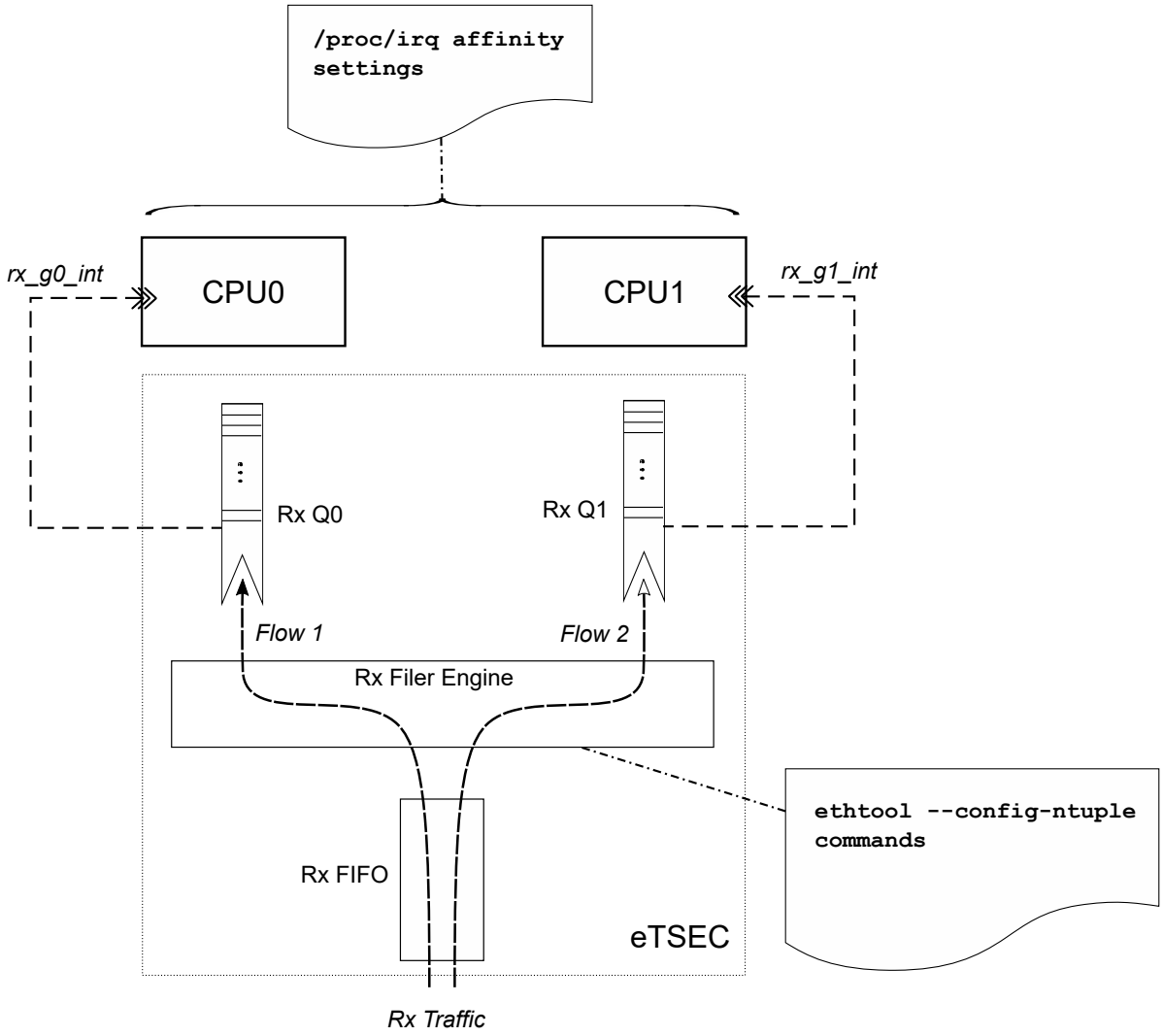

Figure 189. eTSEC RSS support

In Gianfar, Rx flows may be classified either by hashing various protocol header fields, see `ethtool -N rx-flow-hash` option, or by specifying flow type classification rules, see `ethtool -N flow-type` option. Refer to ethtool Linux man-pages for `ethtool -N` option details. A simple usage example is shown below.

```
root@ls1021aqds:~# ethtool -N eth0 flow-type udp4 src-ip 172.16.1.4 dst-port 5000 action 0
fsl-gianfar ethernet.4 eth0: Receive Queue Filtering enabled
Added rule with ID 254
root@ls1021aqds:~# ethtool -N eth0 flow-type udp4 src-ip 172.16.1.4 dst-port 5001 action 1
Added rule with ID 253
root@ls1021aqds:~# ethtool -n eth0
2 RX rings available
Total 2 rules

Filter: 253
        Rule Type: UDP over IPv4
        Src IP addr: 172.16.1.4 mask: 0.0.0.0
        Dest IP addr: 0.0.0.0 mask: 255.255.255.255
        TOS: 0x0 mask: 0xff
        Src port: 0 mask: 0xffff
```

```
        Dest port: 5001 mask: 0x0
        Action: Direct to queue 1

Filter: 254
        Rule Type: UDP over IPv4
        Src IP addr: 172.16.1.4 mask: 0.0.0.0
        Dest IP addr: 0.0.0.0 mask: 255.255.255.255
        TOS: 0x0 mask: 0xff
        Src port: 0 mask: 0xffff
        Dest port: 5000 mask: 0x0
        Action: Direct to queue 0

root@ls1021aqds:~# iperf -s -u -p 5000 &
[1] 1017
------------------------------------------------------------
Server listening on UDP port 5000
Receiving 1470 byte datagrams
UDP buffer size:  160 KByte (default)
------------------------------------------------------------
root@ls1021aqds:~# iperf -s -u -p 5001 &
[2] 1020
------------------------------------------------------------
Server listening on UDP port 5001
Receiving 1470 byte datagrams
UDP buffer size:  160 KByte (default)
------------------------------------------------------------
root@ls1021aqds:~# cat /proc/interrupts | grep eth
176:          7          0       GIC 176  eth0_g0_tx
177:          6          0       GIC 177  eth0_g0_rx
178:          0          0       GIC 178  eth0_g0_er
179:          0          0       GIC 179  eth0_g1_tx
180:          0          0       GIC 180  eth0_g1_rx
181:          0          0       GIC 181  eth0_g1_er

[  3] local 172.16.1.100 port 5000 connected with 172.16.1.4 port 52163
[ ID] Interval       Transfer     Bandwidth        Jitter   Lost/Total Datagrams
[  3]  0.0-10.0 sec  1.25 MBytes  1.05 Mbits/sec   0.003 ms    0/  893 (0%)

root@ls1021aqds:~# cat /proc/interrupts | grep eth
176:          9          0       GIC 176  eth0_g0_tx
177:        902          0       GIC 177  eth0_g0_rx
178:          0          0       GIC 178  eth0_g0_er
179:          1          0       GIC 179  eth0_g1_tx
180:          0          0       GIC 180  eth0_g1_rx
181:          0          0       GIC 181  eth0_g1_er

[  3] local 172.16.1.100 port 5001 connected with 172.16.1.4 port 46257
[ ID] Interval       Transfer     Bandwidth        Jitter   Lost/Total Datagrams
[  3]  0.0-10.0 sec  1.25 MBytes  1.05 Mbits/sec   0.004 ms    0/  893 (0%)

root@ls1021aqds:~# cat /proc/interrupts | grep eth
176:         10          0       GIC 176  eth0_g0_tx
177:        902          0       GIC 177  eth0_g0_rx
178:          0          0       GIC 178  eth0_g0_er
179:          1          0       GIC 179  eth0_g1_tx
180:        894          0       GIC 180  eth0_g1_rx
181:          0          0       GIC 181  eth0_g1_er
root@ls1021aqds:~# echo 1 > /proc/irq/177/smp_affinity
root@ls1021aqds:~# echo 2 > /proc/irq/180/smp_affinity
root@ls1021aqds:~# iperf -s -u -p 1000 &
```

```
[3] 1031
------------------------------------------------------------
Server listening on UDP port 1000
Receiving 1470 byte datagrams
UDP buffer size:  160 KByte (default)
------------------------------------------------------------
[  3] local 172.16.1.100 port 1000 connected with 172.16.1.4 port 58669
[ ID] Interval       Transfer     Bandwidth        Jitter   Lost/Total Datagrams
[  3]  0.0-10.0 sec  1.25 MBytes  1.05 Mbits/sec   0.002 ms    0/  893 (0%)

root@ls1021aqds:~# cat /proc/interrupts | grep eth
176:         13          0       GIC 176  eth0_g0_tx
177:       1798          0       GIC 177  eth0_g0_rx
178:          0          0       GIC 178  eth0_g0_er
179:          1          0       GIC 179  eth0_g1_tx
180:        894          0       GIC 180  eth0_g1_rx
181:          0          0       GIC 181  eth0_g1_er

[  4] local 172.16.1.100 port 5001 connected with 172.16.1.4 port 58876
[  4]  0.0-10.0 sec  1.25 MBytes  1.05 Mbits/sec   0.004 ms    0/  893 (0%)

root@ls1021aqds:~# cat /proc/interrupts | grep eth
176:         16          0       GIC 176  eth0_g0_tx
177:       1800          0       GIC 177  eth0_g0_rx
178:          0          0       GIC 178  eth0_g0_er
179:          1          0       GIC 179  eth0_g1_tx
180:        894        894       GIC 180  eth0_g1_rx
181:          0          0       GIC 181  eth0_g1_er

root@ls1021aqds:~# ethtool -n eth0
2 RX rings available
Total 2 rules

Filter: 253
        Rule Type: UDP over IPv4
        Src IP addr: 172.16.1.4 mask: 0.0.0.0
        Dest IP addr: 0.0.0.0 mask: 255.255.255.255
        TOS: 0x0 mask: 0xff
        Src port: 0 mask: 0xffff
        Dest port: 5001 mask: 0x0
        Action: Direct to queue 1

Filter: 254
        Rule Type: UDP over IPv4
        Src IP addr: 172.16.1.4 mask: 0.0.0.0
        Dest IP addr: 0.0.0.0 mask: 255.255.255.255
        TOS: 0x0 mask: 0xff
        Src port: 0 mask: 0xffff
        Dest port: 5000 mask: 0x0
        Action: Direct to queue 0

root@ls1021aqds:~# ethtool -N eth0 delete 254
root@ls1021aqds:~# ethtool -N eth0 delete 253
root@ls1021aqds:~# ethtool -n eth0
2 RX rings available
Total 0 rules

root@ls1021aqds:~#
```

8.5.1.2.3 NAPI support

Gianfar uses NAPI handling on both Rx and Tx paths, the Linux polling mechanism being triggered by frame receive interrupts and, respectively, frame transmit confirmation interrupts. The driver registers irqs for both Rx and Tx, and the NAPI (polling) handlers are provided to the Kernel.

On the receive path:

- When the receive interrupt gets triggered on a given CPU, a softirq for the polling function on Rx is scheduled.
- The RX_SOFTIRQ thread is raised by the Kernel, on the CPU on which it was triggered (and scheduled), and the Rx queues mapped to the corresponding interrupt group will be processed by the driver's polling function and the incoming packets are being passed to the networking stack.

Similarly on the transmit part:

- A frame transmit confirmation interrupt triggers the scheduling of a softirq under whose context the driver's polling routine for cleaning the Tx rings is invoked.
- The Tx polling routine is also associated with a given interrupt group and it will handle only the transmit queues that are affiliated to that interrupt group.

For packet forwarding, for instance, by mapping the per flow Rx and Tx queues to interrupt groups that are associated to the same CPU, makes it possible to maintain per CPU buffer pools used for reclaiming buffers on a per flow basis, improving cache locality at the same time.

8.5.1.2.4 Interrupt Coalescing

On a high speed network interface the rate of packet reception and transmission can be as high as the CPUs would be spending most of the time servicing these interrupts. With the interrupt coalescing feature, packets are collected and one single interrupt is generated for multiple packets to avoid flooding the system with interrupts from the Ethernet device.

eTSEC supports hardware coalescing of interrupts for both receive and transmit, using packet-count-based thresholds, complemented by timer-based thresholds. Gianfar provides basic support for setting the coalescing parameters via `ethtool -C`, for each device instance, by implementing the following "set coalesce" options:

Table 143. `ethtool -C` options:

rx-frames	packet count threshold for receive (Rx)
rx-usecs	time threshold in microseconds, for receive (Rx)
tx-frames	packet count threshold for transmit confirmation (Tx)
tx-usesc	time threshold in microseconds, for transmit confirmation (Tx)

8.5.1.2.5 Header Recognition and Csum Offload

Header recognition on receive (feature provided by eTSEC), combined with parsing functions and/or hashing of extracted property fields (in case of eTSEC2.0), is used to implement advanced TCP/IP offloading functionality and QoS provisions by programming queue filing strategies into hardware.

Gianfar provides an API to program eTSEC's filer hardware block with packet filtering rules.

On Rx, the TCP/IP Offload Engine (TOE):

- can parse frames:
  - at layer 2 of the stack only (Ethernet headers and switching headers)
  - layers 2 to 3 (including IPv4 or IPv6)
  - layers 2 to 4 (including TCP and UDP)
- provides protocol header recognition

- provides header verification (IPv4 header checksum verification)
- provides TCP/UDP payload checksum verification including verification of associated pseudo-header checksums

For large frames, offload of checksum verification saves a significant fraction of the CPU cycles that would otherwise be spent by the TCP/IP stack. IP packet fragmentation and re-assembly, and TCP stream establishment and tear-down are not performed in hardware.

On Tx side, TOE provides IPv4 and TCP/UDP header checksum generation. The eTSEC does not checksum transmitted packets with IPv6 routing headers or calculate TCP/UDP checksums from IP fragments. If a transmitted TCP segment requires checksum generation but IPv6 extension headers would prevent eTSEC from calculating the pseudoheader checksum, software can calculate just the pseudoheader checksum in advance and supply it to the eTSEC as part of per-frame TOE configuration.

On the Rx side, Gianfar lets the Kernel know that checksum verification is not required if valid IP headers or TCP/UDP headers were found and valid sums were verified, by setting the `CHECKSUM_UNNECESSARY` flag. On Tx side, the checksum is generated (offloaded) for TCP/UDP packets over IPv4 based on the pseudo-header checksum *(phcs)* provided by the Linux networking stack. Gianfar instructs the stack about its ability to provide partial checksumming, based on the *phcs* for TCP/UDP packets, by setting the `NETIF_F_IP_CSUM` device capability flag.

The Frame Control Blocks (FCBs) are 8-byte blocks of TOE control and/or status data that are passed between the driver and each eTSEC. A FCB always precedes the frame it applies to, and is present only when TOE functions are being used.

The first BD of each frame points to the initial data buffer and the FCB. Custom or received Ethernet preamble sequences also follow the FCB if preambles are visible.

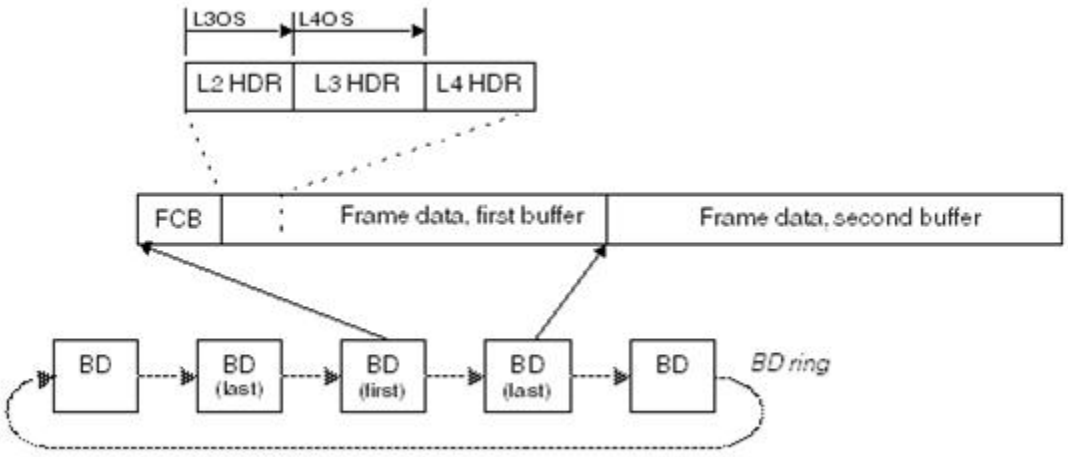

Figure 190. Location of Frame Control Blocks for TOE Parameters

For Tx, FCBs are inserted by Gianfar and TOE acceleration may be applied on a frame-by-frame basis. In the case of RxBD rings, the FCBs are inserted by eTSEC and TOE acceleration is enabled for receive for all frames in this case.

8.5.1.2.6 Scatter Gather Support

Scatter-Gather I/O is a method by which a single procedure call sequentially writes data from multiple buffers to a single data stream or reads data from a data stream to multiple buffers. The buffers are given in a vector of buffers. Scatter/gather refers to the process of gathering data from, or scattering data into, the given set of buffers. The I/O can be performed synchronously or asynchronously to this procedure.

On the Tx side, Gianfar supports "gathering" big packets from multiple buffers. This ability is signaled by the driver to the Linux network stack by setting the `NETIF_F_SG` device hardware feature flag. The driver takes into account the number of fragments composing the packet that is going to be transmitted, and places each fragment into consecutive BD ring buffers before issuing the command to start sending the frame.

On the Rx side, the eTSEC controller is capable of "scattering" big packets into multiple fixed size buffers having consecutive buffer descriptors (BDs). Gianfar supports this feature by implementing paged allocation, so that jumbo frames exceeding a fixed buffer size of 2048 bytes can be automatically received into multiple such buffers. Instead of pre-allocating huge memory buffers to be able to support jumbo frame reception, the paged allocation scheme implemented in Gianfar uses multiple half-page sized buffers thus reducing memory allocation pressure. The driver is also managing a local cache of memory pages, re-using free pages from the cache for future receptions, further improving Rx allocation overhead.

8.5.1.3 Configuration & Control

8.5.1.3.1 Device Tree initialization

Gianfar complies with the device tree (DTS) based open firmware support requirements, and supports multiple Ethernet device instances. The default configuration parameters that are passed via DTS for an Ethernet device instance (node) include:

1. `compatible` and `model` fields defining the driver compatibility across multiple controller H/W IP generations:

Table 144. Gianfar compatibility

Device type (IP):	`.compatible`	`.model`
eTSEC2.0 (veTSEC)	`"fsl,etsec2"`	`"eTSEC"`
eTSEC (eTSEC1.x)	`"gianfar"`	`"eTSEC"`
TSEC	`"gianfar"`	`"TSEC"`
FEC	`"gianfar"`	`"FEC"`

2. Interrupt grouping of multiple queues, for eTSEC2.0: `queue-group` subnode, including:
   - Interrupt numbers assignment for the Rx, Tx and Error lines, `interrupts` property;
   - Interrupt group register block address and size, `reg` property;
3. Power management capability properties:
   - `fsl,magic-packet`: If present, indicates that the hardware supports waking up via magic packet;
   - `fsl,wake-on-filer`: If present, indicates that the hardware supports waking up by Filer General Purpose Interrupt (FGPI) asserted on the Rx int line. This is an advanced power management capability allowing certain packet types (user) defined by filer rules to wake up the system.
4. For older DTs, number of supported TX and RX queues: `fsl,num-rx-queues` and `fsl,num-tx-queues`; *[obsolete]*
5. Various link management properties.

Typical eTSEC2.0 device tree node (LS1021a example):

```
enet0: ethernet@2d10000 {
    compatible = "fsl,etsec2";
    device_type = "network";
    #address-cells = <2>;
    #size-cells = <2>;
    interrupt-parent = <&gic>;
    model = "eTSEC";
    fsl,magic-packet;
    fsl,wake-on-filer;

    queue-group@2d10000 {
        #address-cells = <2>;
        #size-cells = <2>;
        reg = <0x0 0x2d10000 0x0 0x1000>;
        interrupts = <GIC_SPI 144 IRQ_TYPE_LEVEL_HIGH>,
            <GIC_SPI 145 IRQ_TYPE_LEVEL_HIGH>,
```

```
            <GIC_SPI 146 IRQ_TYPE_LEVEL_HIGH>;
    };

    queue-group@2d14000  {
        #address-cells = <2>;
        #size-cells = <2>;
        reg = <0x0 0x2d14000 0x0 0x1000>;
        interrupts = <GIC_SPI 147 IRQ_TYPE_LEVEL_HIGH>,
            <GIC_SPI 148 IRQ_TYPE_LEVEL_HIGH>,
            <GIC_SPI 149 IRQ_TYPE_LEVEL_HIGH>;
    };
};
```

8.5.1.3.2 Ethtool support

Table 145. Non-exhaustive list of the most notable *ethtool* commands implemented by Gianfar:

Commands		Description
`ethtool -C`	`rx-usecs N rx-frames N tx-usecs N tx-frames N`	Set interrupt coalescing for a given device, packet count (‘frames’) and time in microsecs (‘usecs’) thresholds, for Rx and resp. Tx.
`ethtool -G`	`rx N  tx N`	Set RxBD ring, resp. TxBD ring sizes for a given device.
`ethtool -K`	`rxvlan on|off txvlan on|off`	Turn on/off H/W VLAN tag extraction(rx) / insertion(tx).
`ethtool -S`		Show interface statistics, Linux specific counters and various eTSEC H/W counters supporting RMON MIB group 1, group 2 (ifTable counters), group 3, group 9, RMON MIB 2, and the 802.3 Ethernet MIB statistics.
`ethtool -N`	`rx-flow-hash tcp4|udp4|tcp6|udp6 v|t|s|d|f|n`	Configure Rx network flow classification options. The classified flows may be tcp/udp over ipv4/v6, and the hashing may be performed on various header fields, according to the 3rd parameter: • s,d: src/dest IP addresses; • v: VLAN id; • t: L3 PROTO field, • f,n: source and dest TCP/UDP ports.
`ethtool -N`	`flow-type ether|ip4|tcp4|udp4|sctp4`	Inserts or updates a classification rule for the specified flow type. Most IPv4 flow types are supported: raw IPv4, TCP, UDP, SCTP, as well as L2 flow specifications (ether). For a detailed description of the command sub-options refer to ethtool Linux man-pages.

NOTE

For detailed description of `ethtool` command options refer to ethtool Linux man-pages.

8.6 ENETC ethernet and Felix switch drivers

8.6.1 LS1028A Interface naming

Following section documents the association between physical interfaces and networking interfaces as presented by software.

LS10128A Interface naming in U-Boot

The following figure shows the Ethernet ports as presented in U-Boot. Note that not all ports are available.

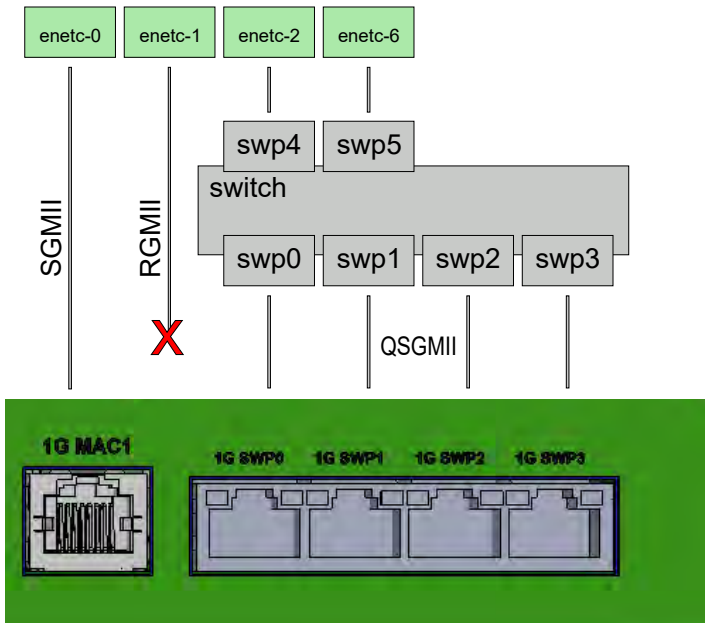

Figure 191. U-boot network interfaces on LS1028ARDB

LS1028ARDB port	U-Boot interface	PCI function	Comments
1G MAC1	***enetc-0***	0000:00:00.0	
N/A	***enetc-1***	0000:00:00.1	*enetc#1* is presented in U-Boot on all boards. this interface is not functional on LS1028ARDB.
Internal	***enetc-2***	0000:00:00.2	Connected internally (MAC to MAC) to the Ethernet switch. This interface can be used to access remote hosts connected to switch ports.
Internal	***enetc-6***	0000:00:00.6	Connected internally (MAC to MAC) to the Ethernet switch. This interface is present if bit 851 is set in RCW.

Table continues on the next page...

Table continued from the previous page...

LS1028ARDB port	U-Boot interface	PCI function	Comments
1G SWP0 to **1G SWP3**	swp0, swp1, swp2, swp3	0000:00:00.5	As of BSP0.3 switch ports can be used in U-Boot both to access remote hosts (through *enetc#2*) and to switch between external ports.

LS1028A Interface naming in Linux

The following figure shows how Ethernet ports are presented in Linux.

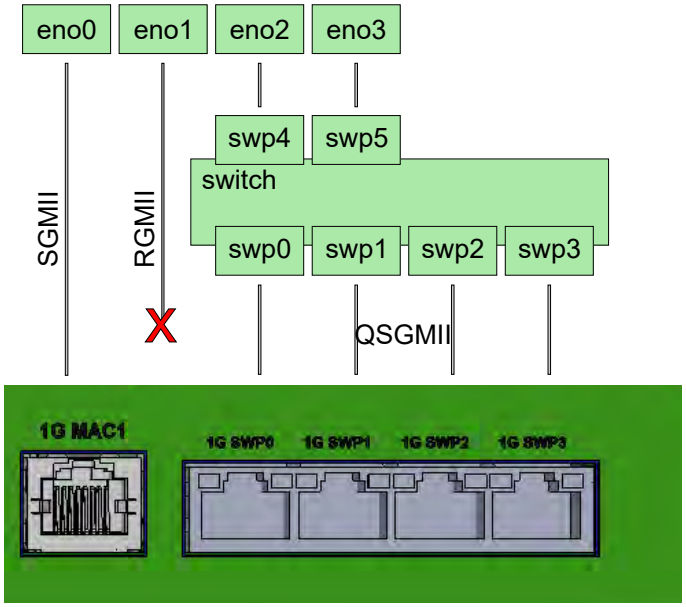

Figure 192. Linux network interfaces on LS1028ARDB

LS1028ARDB port	Linux netdev	PCI function	Comments
1G MAC1	***eno0***	0000:00:00.0	

N/A	***eno1***	0000:00:00.1	RGMII interface is not present on LS1028ARDB board and the associated ENETC interface is disabled in device tree:
			&enetc_port1 {
			status = "disabled";
			};

Table continues on the next page...

Table continued from the previous page...

LS1028ARDB port	Linux netdev	PCI function	Comments
Internal	*eno2*	0000:00:00.2	Connected internally (MAC to MAC) to *swp4*. This is used to carry traffic between the switch and software running on Arm cores.
Internal	*eno3*	0000:00:00.6	Connected internally (MAC to MAC) to *swp5*. This is used to carry switch control traffic between the switch and Linux bridge. This interface is present if bit 851 is set in RCW.
1G SWP0 to **1G SWP3**	*swp0* to *swp3*	0000:00:00.5	By default, switching is not enabled on these ports. For detail on how to enable switching across these ports, see Felix Ethernet switch.
Internal	*swp4*		Connected internally (MAC to MAC) to *eno2*.
Internal	*swp5*		Connected internally (MAC to MAC) to *eno3*.

8.6.2 ENETC Linux Ethernet driver

8.6.2.1 Introduction

ENETC (Ether NET Controller) is a 4-port virtualized Ethernet controller supporting Gigabit Ethernet (GbE) designs and Time-Sensitive Networking (TSN) functionality.

ENETC offers fully integrated GbE Media Access Controllers (MACs). It supports preemption and various offload functions for protocols including IP, TCP, UDP while maintaining wire speed on all interfaces.

Operating as an SR-IOV (Single Root Input/Output Virtualization) multi-PF (Physical Function) capable root complex integrated device, ENETC is discoverable by standard PCI Express.

This document provides operational details for the core ENETC Linux Ethernet driver and supported features. The PTP (Precision Time Protocol) and TSN (Time Sensitive Networking) extensions are covered in separate documents.

NOTE

For additional information, please refer QorIQ LS1028A Reference Manual at nxp.com.

8.6.2.1.1 Acronyms, abbreviations, terms

The table below lists and explains the acronyms, abbreviations, and terms used in this document.

Table 146. Acronyms, abbreviations, terms

Term	Definition
ENETC	The whole integrated Ethernet Controller with multiple physical Ethernet ports (or MACs) and PCIe endpoints.
ENETC Port, or port	The ENETC hardware device that controls a single physical Ethernet port (or MAC). Same as ENETC PF but when used the focus of the term is on the underlying hardware resources like the physical Ethernet port, and not necessarily on the PF Linux networking device. Also, an ENETC Port includes all underlying ENETC VF h/w resources (if existing).
ENETC PF, or PF	PF stands for PCIe Physical Function. This is the Linux network device, exposed as a PCIe endpoint device, the interface through which Linux manages an ENETC Port. Sometimes interchangeably used with ENETC Port.
ENETC VF, or VF	VF stands for PCIe Virtual Function. This is the Linux network device, exposed as a PCIe endpoint device, that is associated to an ENETC PF device. Shares the same Ethernet link with the managing PF device. The PF can enable/disable the underlying VF devices.
PCIe	See PCI Express standard specification.
SR-IOV	See Single Root I/O Virtualization PCIe specification.

8.6.2.2 Linux kernel configuration items

This section explains how to identify the ENETC driver modules, corresponding kernel configuration options, and associated device tree nodes.

8.6.2.2.1 Driver modules and dependencies

The following table describes the Ethernet driver modules and related dependencies.

Table 147. Driver modules and dependencies

Module	Runtime dependency	Description
fsl-enetc.ko	fsl-enetc-mdio.ko	ENETC Physical Function (PF) Ethernet driver
fsl-enetc-vf.ko	fsl-enetc-mdio.ko	ENETC Virtual Function (VF) Ethernet driver
fsl-enetc-mdio.ko	-	ENETC Central MDIO controller (PCIe PF 3)

8.6.2.2.2 Kernel configuration options

The kernel configuration tree view for enabling the ENETC PF and VF driver modules via `make menuconfig`:

```
Device Drivers  --->
    [*] Network device support  --->
        [*] Ethernet driver support  --->
            [*] Freescale devices
                <*> ENETC PF driver
                <*> ENETC VF driver
```

Table 148. Driver kernel config options

Option	Values	Modules
CONFIG_FSL_ENETC	y/m/n	fsl-enetc.ko
CONFIG_FSL_ENETC_VF	y/m/n	fsl-enetc-vf.ko
CONFIG_FSL_ENETC_MDIO	y/m/n	fsl-enetc-mdio.ko

8.6.2.2.3 Device tree nodes

The ENETC drivers are **PCI device drivers**, and the ENETC PCI Root Complex Integrated Endpoint (RCIE) is described through the following PCIe device tree node:

```
pcie@1f0000000 {/* Integrated Endpoint Root Complex */
    compatible = "pci-host-ecam-generic";
    reg = <0x01 0xf0000000 0x0 0x100000>;
    #address-cells = <3>;
    #size-cells = <2>;
    msi-parent = <&its>;
    device_type= "pci";
    bus-range= <0x0 0x0>;
    dma-coherent;
    msi-map = <0 &its ...>;
    iommu-map = <0 &smmu ...>;

    ranges = <…>
        /* PF0-6, BAR0 - non-prefetchable memory */
        /* PF0-6, BAR2 - prefetchable memory */
        /* PF0, VF-BAR0 - non-prefetchable memory */
        /* PF0, VF-BAR2 - prefetchable memory */
        /* PF1, VF-BAR0 - non-prefetchable memory*/
        /* PF1, VF-BAR1 - prefetchable memory */
        […]

    enetc_port0: ethernet@0,0 {
        compatible = “fsl,enetc”;
        reg = <0x000000 0 0 0 0>;
    };
    enetc_port1: ethernet@0,1 {
        compatible = “fsl,enetc”;
        reg = <0x000100 0 0 0 0>;
    };
    enetc_mdio_pf3: mdio@0,3 {
        compatible = "fsl,enetc-mdio";
        reg = <0x000300 0 0 0 0>;
        #address-cells = <1>;
        #size-cells = <0>;
    };
    enetc_port2: ethernet@0,2 {
        compatible = “fsl,enetc”;
        reg = <0x000200 0 0 0 0>;
        fixed-link {[…]};
    };
    […]
    enetc_port3: ethernet@0,6 {
        compatible = “fsl,enetc”;
```

```
        reg = <0x000600 0 0 0 0>;
        status = “disabled”;
        fixed-link {[…]};
    };
};
```

For device tree binding definitions of the ENETC nodes refer to kernel document:

```
Documentation/devicetree/bindings/net/fsl-enetc.txt
```

8.6.2.2.4 Source files

ENETC and ENETC MDIO driver sources:

Table 149. Source files

Source file	Description
`enetc_pf.c, enetc_pf.h`	ENETC PF driver, ENETC PSI and Port specific code
`enetc_vf.c`	ENETC VF driver, ENETC VSI specific code
`enetc.c, enetc.h`	Packet processing and other PF and VF common logic
`enetc_hw.h`	ENETC h/w specific defines (reg offsets, BDR structs etc.)
`enetc_ethtool.c`	ethtool support
`enetc_cbdr.c`	ENETC Control Buffer Descriptor Ring support
`enetc_msg.c`	ENETC VF-PF Messaging support
`include/linux/fsl/enetc_mdio.h, enetc_mdio.c, enetc_pci_mdio.c`	ENETC MDIO driver. Provides PHY level services to the ENETC driver, may also be shared with other integrated IPs that use the same MDIO support.
`enetc_ptp.c, enetc_qos.c, enetc_tsn.c`	H/w timestamping (PTP) and TSN related support.

8.6.2.3 Linux runtime usage

Overview of the major ENETC driver features and related usage instructions:

- ENETC interfaces and probing
- Multi-queue support
- Rx checksum offload
- Unicast and multicast MAC filtering
- VLAN filtering
- VLAN insertion/ extraction
- Scatter-gather and jumbo frame support
- Rx flow hashing (RSS)
- Rx flow steering (RFS)

- QoS – TC offloading with h/w MQPRIO
- Statistics and debug counters
- VF primary MAC address config

8.6.2.3.1 ENETC interfaces and probing

The following table lists supported ENETC interfaces. The PCIe PF IDs along with interface type information are provided for each ENETC Port, as well as the number of supported VF devices for each port (PF).

Table 150. PCIe PF endpoint IDs of ENETC Ports

Ethernet Ports	PCIe PF ID	Interface type	Supported VFs
Port 0	0	External - SGMII/USXGMII (10/100/1G/2.5Gbps)	2
Port 1	1	External - RGMII (10/100/1Gbps)	2
Port 2	2	Internal - Ethernet Switch @ 2.5Gbps	n/a
Port 3	6	Internal - Ethernet Switch @ 1Gbps	n/a

Successful probing of ENETC ports (if enabled) is met by the following boot log message:

```
fsl_enetc 0000:00:00.0 eth0: ENETC PF driver v1.0
```

Example - probing of ENETC PFs on the LS1028ARDB board:

```
fsl_enetc 0000:00:00.0: enabling device (0400 -> 0402)
fsl_enetc 0000:00:00.0 eth0: ENETC PF driver v1.0
[…]
fsl_enetc 0000:00:00.1: device is disabled, skipping
[…]
fsl_enetc 0000:00:00.2: enabling device (0400 -> 0402)
fsl_enetc 0000:00:00.2 eth1: ENETC PF driver v1.0
[…]
fsl_enetc 0000:00:00.6: device is disabled, skipping
```

Upon successful probing, each ENETC Port (PF) will have a network device interface attached. A udev script should trigger at this point to apply networking interface renaming rules for the ENETC interfaces, changing the name from generic ethX format to enoX. The new name format should help to identify the physical ENETC interfaces easily on the board, as detailed in the “Interface naming” document.

Example – Renaming of the ENETC Port0 interface:

```
fsl_enetc 0000:00:00.0 eth126: renamed from eth0
udevd[396]: renamed network interface eth0 to eth126
fsl_enetc 0000:00:00.0 eno0: renamed from eth126
udevd[396]: renamed network interface eth126 to eno0
```

Probing of VF devices is achieved by requesting a given number of VFs (at least one) from a given PF device, by setting `sriov_numvfs` via the PCI `sysfs` interface.

NOTE

An ENETC VF is a separate network device that can be independently assigned to a virtualization context. For instance, in a system setup consisting of a Host Linux machine running a Guest Linux in a Virtual Machine (VM), one can assign a VF to the VM while the Host Linux includes the corresponding PF device. This is a typical scenario targeted by the SR-IOV specification, where the VF provides hardware level fast networking data path to the Guest Linux (i.e. packet I/O) while insuring proper networking device isolation and secure access rights for the VM.

Example - Probing ENETC **VF0** of **PF0** (Port0):

```
# echo 1 > /sys/bus/pci/devices/0000\:00\:00.0/sriov_numvfs
fsl_enetc_vf 0000:00:01.0: enabling device (0000 -> 0002)
fsl_enetc_vf 0000:00:01.0 eth1: ENETC VF driver v1.0
```

The udev script triggers in this case too, renaming the ENETC VF interface to the friendly format established for ENETC VF interfaces in the “Interface naming” document.

Example – Renaming of **PF0**’s **VF0** interface:

```
fsl_enetc_vf 0000:00:01.0 eth112: renamed from eth1
udevd[1678]: renamed network interface eth1 to eth112
fsl_enetc_vf 0000:00:01.0 eno0vf0: renamed from eth112
udevd[1678]: renamed network interface eth112 to eno0vf0
```

8.6.2.3.2 Multi-queue support

The ENETC hardware features multiple Rx and Tx buffer descriptor rings for each ENETC Port. For the ports that have associated VFs, the rings are assignable between the PF and the VFs. Each ring in turn is also assigned to a MSIX interrupt vector affined to a separate CPU.

Table 151. Ring assignment for each ENETC Port

ENETC Port	Total available h/w rings	PF netdev queues	VF0 netdev queues	VF1 netdev queues
Port 0	16 Rx / 16 Tx	2 Rx / 8 Tx	2 Rx / 4 Tx	2 Rx / 4 Tx
Port 1	16 Rx / 16 Tx	2 Rx / 8 Tx	2 Rx / 4 Tx	2 Rx / 4 Tx
Port 2	8 Rx / 8 Tx	2 Rx / 8 Tx	-	-
Port 3	8 Rx / 8 Tx	2 Rx / 8 Tx	-	-

Each ring enabled in the ENETC driver is assigned to a kernel net device queue. Each PF and VF is assigned to a netdevice interface owning the above Rx and Tx queues. Note that only 2 Rx queues are currently used per netdevice since LS1028A has only 2 CPUs. By default, even queues are assigned to CPU0 (MSIX interrupt vector 0) and odd queues to CPU1 (MSIX interrupt vector 1).

8.6.2.3.3 Rx checksum offload

ENETC can extract the “internet checksum” (L3) for each received packet, calculated over the L2 payload (the entire L3 packet), i.e. does not include the L2 header nor FCS.

The ENETC driver forwards the hardware computed checksum for each received packet (regardless of packet type) to the Linux networking stack as a “CHECKSUM_COMPLETE” checksum type, which is the most generic way of computing checksum by a hardware device. Being protocol independent this checksum type can be reused by the Linux stack in the most generic way, in that it can be employed by the stack to derive checksum computation for a wide variety of protocols, including encapsulated protocols.

Rx checksum offload is enabled by default in the ENETC driver. However, it can also be switched off/on (for testing purposes) via ‘ethtool -K rx on|off’ command.

Example – Checking the Rx checksum offload status:

```
# ethtool -k eno0 | grep checksum | grep rx
rx-checksumming: on
```

8.6.2.3.4 Unicast and multicast MAC filtering

Filtering of unicast and multicast destination MAC (L2) addresses for incoming packets is enabled in the ENETC driver, for every ENETC Port. This means that the ENETC driver can receive packets that not only match the primary MAC address of that port but also packets that match the unicast and multicast MAC addresses programed into the filters for each PF netdevice, without the need to set the interface into promiscuous mode. Packets that don't match the filters (nor the primary MAC address) will be dropped at hardware level, thus greatly reducing the system load caused by the reception of unwanted packets that would have occurred with the interface in promiscuous mode.

There are numerous use cases by which the Linux stack assigns multiple unicast and multicast MAC addresses to a physical Ethernet port. For instance, configuring multiple Linux macvlan virtual interfaces on top of a given ENETC PF interface, each macvlan interface having its own unicast MAC address. Multiple multicast MAC addresses can be added to the same netdevice interface by simply invoking the 'ip maddr add' command.

The ENETC hardware filters however rely on 64-bit hash tables, so false positives are possible. For unicast addresses, there's the possibility to have exact match entries, however their number is very limited (less than 8 per port, some of these being reserved). Once the number of available exact match entries is exceeded, the unicast exact match filter is converted into a 64-bit hardware hash table filter as well.

8.6.2.3.5 VLAN filtering

The ENETC driver supports VLAN C-TAG filtering for PF instances. This feature is supported by a 64-bit hash table for each port, used to match against hashed VLAN IDs. The VLAN ID to be matched is hashed into a 6-bit index which in turn is used to access a bit in the VLAN hash table. If the corresponding bit is set to one, then this is considered a successful match. In this regard, the hardware VLAN ID filter is "imperfect" and false positive matches are possible, so the networking stack needs to do further filtering to ensure that only frames with the tag of interest are accepted.

The VLAN C-TAG filtering feature (offload) described above is enabled by default in the ENETC driver, and is always on,
For example:

```
# ethtool -k eno0 | grep vlan | grep filter
rx-vlan-filter: on [fixed]
rx-vlan-stag-filter: off [fixed]
```

8.6.2.3.6 VLAN insertion/ extraction

VLAN C-Tag insertion and extraction are supported based on the ENETC hardware's ability to parse packets and identify, extract, or insert IEEE 802.1Q VLAN tags, but also C-Tags for stacked VLAN packets (IEEE 802.1ad, "Q-in-Q").

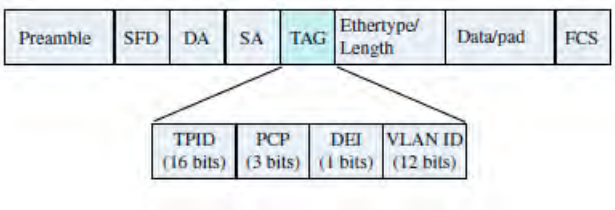

Figure 193. IEEE 802.1Q VLAN tag

This feature (offload) is also enabled by default in the ENETC driver and can be switched on/off by the 'ethtool -K rxvlan|txvlan on|off' commands.

Example - Enabling VLAN tag extraction (rxvlan) and insertion (txvlan) for eno0 (PF0):

```
# ethtool -K eno0 rxvlan on txvlan on
```

Checking VLAN offload status:

```
# ethtool -k eno0 | grep vlan
rx-vlan-offload: on
tx-vlan-offload: on
[…]
```

8.6.2.3.7 Scatter-gather and jumbo frame support

Scatter-gather (S/G) of Ethernet frames is supported by the ENETC driver on both Rx and Tx paths.

On Rx, ENETC can receive Ethernet frames with a payload bigger that the standard 1500 bytes (jumbo frames). Frames of up to 9600 bytes (including L2 header and FCS) can be broken up into multiple buffers and forwarded to the Linux networking stack for processing.

Likewise, on Tx, the MAC can transmit Ethernet frames of up 9600 bytes spanning multiple buffers. The scatter-gather support is enabled by default in the driver. However, on Tx, since the networking stack controls buffer allocation, this option can be switch off / on via the `'ethtool -K tx-scatter-gather'` command.

Example – Checking the status of Tx S/G support (offload):

```
# ethtool -k eno0 | grep scatter-gather
scatter-gather: on
        tx-scatter-gather: on
        tx-scatter-gather-fraglist: off [fixed]
```

The maximum L2 payload size on Tx is controlled by the MTU setting, which defaults to 1500 bytes. The MTU of an ENETC netdevice interface (both PF and VF) can be increased to up to (9600 – L2 header size – FCS size) bytes.

Example – Increasing MTU for an ENETC netdevice interface:

```
# ip link set eno0 mtu 8000
```

While not recommended under traffic, updating the MTU with the interfaces up is allowed.

8.6.2.3.8 Rx flow hashing (RSS)

The ENETC hardware receive side scaling (RSS) feature is utilized in order to balance workloads among cores and provides a method to select various Rx queues upon reception of a packet. Each queue or queue group is then assigned to a different processor. RSS helps improve system performance by reducing processing delays by distributing packets across multiple cores, reducing spin lock overhead by increasing probability that software sharing data execute on the same core and reducing reloading of caches by increasing probability that software share data on the same core.

The hardware support for RSS may be summarized by the following high level diagram:

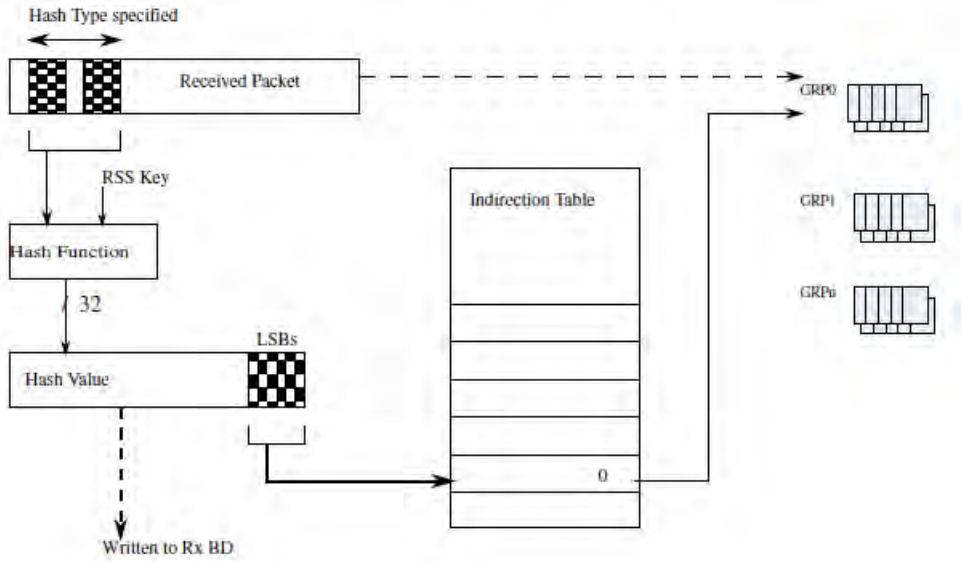

Figure 194. RSS hardware diagram for ENETC

Hashing is done based on the Toeplitz hash function which requires a 40B random secret key as well as on the relevant pieces of the packet header (n-tuple). All 40B of the random key are used for IPv6 packets while only 16B are used for IPv4 packets. Which fields are used to build the hash are dependent upon packet type:

- IPv4 with TCP [4-tuple]: Concatenates source IPv4 address, destination IPv4 address, source TCP port & destination TCP port
- IPv4 with UDP [4-tuple]: Concatenates source IPv4 address, destination IPv4 address, source UDP port & destination UDP port
- IPv4 [2-tuple]: Concatenates source IPv4 address & destination IPv4 address
- IPv6 with TCP [4-tuple]: Concatenates source IPv6 address, destination IPv6 address, source TCP port & destination TCP port
- IPv6 with UDP [4-tuple]: Concatenates source IPv6 address, destination IPv6 address, source UDP port & destination UDP port

The supported hashing fields for each flow type can also be verified at runtime via the `'ethtool -n rx-flow-hash'` command.

Example – Displaying supported hashing fields for different flows (e.g. tcp4):

```
# ethtool -n eno0 rx-flow-hash tcp4
TCP over IPV4 flows use these fields for computing Hash flow key:
L2DA
VLAN tag
L3 proto
IP SA
IP DA
L4 bytes 0 & 1 [TCP/UDP src port]
L4 bytes 2 & 3 [TCP/UDP dst port]
```

Example – Displaying hashing function information including secret hash key:

```
# ethtool -x eno2
RX flow hash indirection table for eno2 with 2 RX ring(s):
    0:      0     1     0     1     0     1     0     1
    8:      0     1     0     1     0     1     0     1
```

```
   16:      0     1     0     1     0     1     0     1
   24:      0     1     0     1     0     1     0     1
   32:      0     1     0     1     0     1     0     1
   40:      0     1     0     1     0     1     0     1
   48:      0     1     0     1     0     1     0     1
   56:      0     1     0     1     0     1     0     1
RSS hash key:
1a:8c:6c:16:24:7f:f4:63:94:71:6a:b4:76:a3:3c:22:19:a9:17:36:93:83:eb:06:f6:c9:d3:ca:09:ce:1c:1d:f7:06:
71:57:05:ea:39:45
RSS hash function:
    toeplitz: on
    xor: off
    crc32: off
```

The RSS hash key and indirection table may be changed by the `'ethtool -X'` command.

The RSS hashing feature (hardware offload) can be enabled/disabled via `'ethtool -K'`.

Example – Enabling/disabling RSS:

```
# ethtool -K eno0 rxhash on
Checking RSS status:
# ethtool -k eno2 | grep hashing
receive-hashing: on
```

8.6.2.3.9 Rx flow steering (RFS)

Receive flow steering (RFS) is utilized to improve data locality essentially by steering packets of a given flow to the core where the application thread consuming the flow is running. This mechanism relies on the availability of multiple h/w rings onto which to direct flows, and the ability to affine the rings to different CPUs (see also the "Multi-queue support" section).

On the LS1028A SoC, the ENETC driver assigns by default one Rx queue to each CPU, so that Rx queue 0 is assigned to CPU#0 and Rx queue 1 to CPU#1. The Rx flows are steered based on flow classification rules, specified via the `'ethtool -N flow-type'` tool.

Example – Steering packets based on IPv4 destination address:

```
// packets w/ dest ip addr 192.168.0.1 to queue 0, 192.168.1.1 to queue 1
# ethtool -N eno0 flow-type ip4 dst-ip 192.168.0.1 action 0
Added rule with ID 15
# ethtool -N eno1 flow-type ip4 dst-ip 192.168.1.1 action 1
Added rule with ID 15

// verifying the rules
# ethtool -n eno0
2 RX rings available
Total 1 rules

Filter: 15
        Rule Type: Raw IPv4
        Src IP addr: 0.0.0.0 mask: 255.255.255.255
        Dest IP addr: 192.168.1.2 mask: 0.0.0.0
        TOS: 0x0 mask: 0xff
        Protocol: 0 mask: 0xff
        L4 bytes: 0x0 mask: 0xffffffff
        Action: Direct to VF 0 queue 0

// there's also the option to delete rules
# ethtool -N eno0 delete 15
```

The ENETC driver support most of the IPv4 flow types, including: raw IPv4, TCP, UDP, SCTP, as well as L2 flow specifications (ether):

Table 152. ethtool

ethtool -N	flow-type ether|ip4|tcp4|udp4|sctp4

Classes of flows can be specified for all the supported flow types above by means of the mask attribute.

Example – Steering a class of IPv4 destination addresses from the same subnet:

```
// steer packets for subnet 192.168.0.* to queue 0
# ethtool -N eno0 flow-type ip4 dst-ip 192.168.0.0 m 255.255.255.0 action 0
Added rule with ID 15

# ethtool -n eno0
2 RX rings available
Total 1 rules

Filter: 15
        Rule Type: Raw IPv4
        Src IP addr: 0.0.0.0 mask: 255.255.255.255
        Dest IP addr: 192.168.1.0 mask: 255.255.255.0
        TOS: 0x0 mask: 0xff
        Protocol: 0 mask: 0xff
        L4 bytes: 0x0 mask: 0xffffffff
        Action: Direct to VF 0 queue 0
```

For other detailed ethtool -N command options refer to ethtool Linux man-pages.

8.6.2.3.10 QoS – TC offloading with h/w MQPRIO

According to the Linux man pages for the 'tc' command (iproute2 package), the MQPRIO qdisc – "Multiqueue Priority Qdisc (Offloaded Hardware QOS)" - is "a simple queuing discipline (qdisc) that allows mapping traffic flows to hardware queue ranges using priorities and a configurable priority to traffic class mapping. A traffic class in this context is a set of contiguous qdisc classes which map 1:1 to a set of hardware exposed queues."

Consequently, the ENETC hardware can prioritize the Tx rings (queues) assigned to any ENETC device (i.e. any PF or VF device) by associating a strict priority to each ring from the lowest priority class which is 0 (default value) to the highest one which is 7. The prioritization request is passed down from the Linux kernel to the ENETC driver in the form of a request for up to 8 traffic classes. The ENETC driver checks that there are enough Tx rings to accommodate all the requested traffic classes, and updates the priorities of each ring increasingly, starting with ring 0 (priority 0). The remaining rings that don't have a traffic class attached default to the lowest priority (0).

Here's an example of how to create a MQPRIO qdisc with 4 traffic classes. The 'map' argument simply maps each traffic class to a high level 'tc' priority that can be used later by the filter commands to refer to a specific traffic class. In this case, 'tc' priorities 0-1 are mapped to traffic class 0, 2-3 to traffic class 1, 4-5 to traffic class 2, and 5-7 to traffic class 3:

```
# tc qdisc add dev eno0 root handle 1: mqprio num_tc 4 map 0 0 1 1 2 2 3 3
```

Next, an example is provided for how to prioritize different traffic flows in this setup. The following 2 filters specify that traffic for destination port 6000 (tcp or udp) has priority 1 (assigned to traffic class 0) and traffic for destination port 7000 has priority 2 (higher priority, traffic class 1):

```
# tc qdisc add dev eno0 clsact

# tc filter add dev eno0 egress prio 1 u32 match ip dport 6000 0xffff action skbedit priority 1

# tc filter add dev eno0 egress prio 1 u32 match ip dport 7000 0xffff action skbedit priority 2
```

8.6.2.3.11 Statistics and debug counters

ENETC hardware counters can be displayed via the `ethtool -S` command for each network device (i.e. every ENETC station interface). The counters include some standard MAC/Ethernet frames statistics, traffic related information for each Rx/Tx ring, and error event counters.

There's also support for dumping a driver configured selection of device registers, to be used for debugging, via `ethtool -d`.

8.6.2.3.12 VF primary MAC address config

Configuring the primary MAC address of an ENETC VF device takes into consideration some restrictions imposed by typical access rights given to PCIe VFs in relation with the owning PF. The workflow for configuring the MAC address of a VF is as follows:

The Host needs to enable a VF first, For example, enabling VF0 for ENETC Port0 (PF0):

```
# echo 1 > /sys/bus/pci/devices/0000\:00\:00.0/sriov_numvfs
```

The PF0 interface also needs to be up so that the physical Ethernet link is initialized, For example:

```
# ifconfig eno0 up
```

Once the VF device is enabled it has a random MAC address assigned. At this point, changing the primary MAC address in VM (Guest Linux) context is allowed provided the Host doesn't change the MAC address of the same VF beforehand, For example:

```
# ip link set eno0vf0 addr aa:bb:cc:dd:ee:ff
```

The Host owning a PF device can also configure the primary MAC address of VFs belonging to that PF, in which case the Host configuration takes precedence over VF level configurations, For example:

```
# ip link set eno0 vf 0 mac aa:bb:cc:dd:ee:ff
```

At this point the VF MAC address can no longer be changed via the VF0 netdevice interface (i.e. from the Guest / VF context), and for any attempt to do so the Host will be notified via a warning message, For example:

```
fsl_enetc 0000:00:00.0: Attempt to override PF set mac addr for VF0
```

The VF primary MAC address configuration also comes with an anti-spoofing security feature, meaning that the VF is denied transmission of packets whose source MAC address is different from VF's primary MAC address if this feature is on. Anti-spoofing can be turned on/off by the following command, For example:

```
# ip link set eno0 vf 0 spoofchk on
```

8.6.2.4 Performance considerations and benchmarking provisions

Packet forwarding benchmarking for ENETC is based on the RFC2544 methodology. The maximum aggregated throughput is being measured for multiple balanced opposite direction flows of IPv4 packets forwarded between two ENETC interfaces.

Table 153. Packet forwarding benchmarking setups

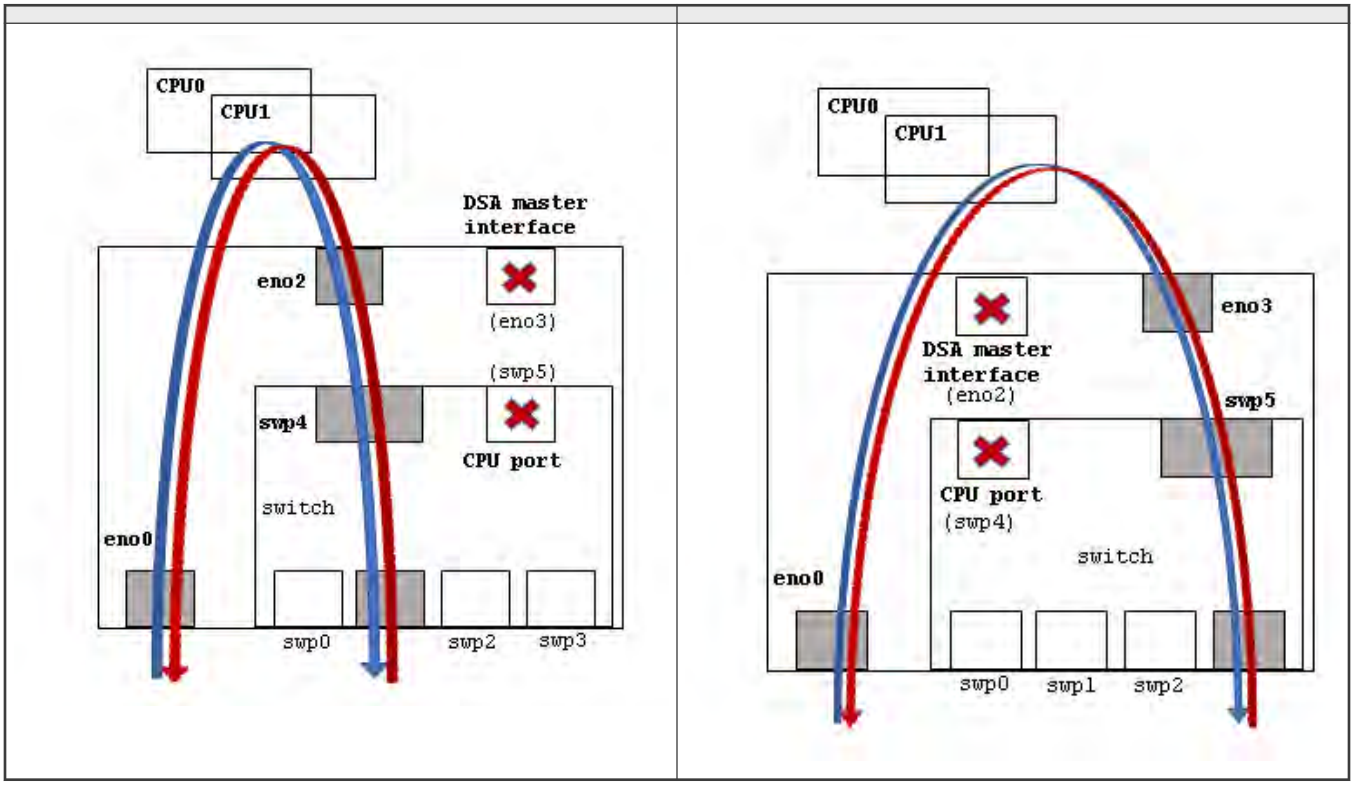

For meaningful and consistent results of this benchmark test across multiple kernel versions and platforms the following configuration steps and setup guidelines are being enforced:

- **Configuring switch ports on the forwarding path**

  Only non-CPU switch ports must be included on the forwarding path, see Figure 3. The setup on the left is the default benchmarking configuration, with swp5 configured as CPU port and corresponding eno3 as DSA master interface. In this setup the packet forwarding interfaces are eno0 and eno2 and both 1G and 2.5G link speeds are possible.

  However, for setups that enforce swp4 as CPU port (and so eno2 as DSA master) benchmarking is still possible over eno3 and swp5 (see right diagram from Figure 3) but only at 1G link speed (the internal link to eno3 – ENETC Port3 – is a 1G link).

  The internal non-CPU switch port and corresponding internal ENETC port need to be activated via device tree, as they are disabled by default. Also, the switch needs to be configured in bridge mode so that packet can be forwarded between the front panel port and the non-CPU internal switch port (refer to the Felix switch document for details on these configurations).

  Any front panel switch interface (swp0 – swp3) can be used as traffic input/output port on these setups.

- **Balanced flow processing among CPUs**

  Rx and Tx queues are grouped into interrupt vectors and interrupt vectors are affined to separate CPUs. ID 0 queues (and remaining even queues for Tx) are affined to CPU0 and ID 1 queues (and remaining odd Tx queues) to CPU1.

  For the most stable results of the RFC2544 benchmark test a low number of predetermined flows is used, and the number of flows in one direction equals the number of flows in the opposite direction. Traffic injection rates in both directions should also be equal. The flows in this case can be individually steered (RFS) so that the flows in one direction get processed on one CPU and the flows from the opposite direction by the other CPU, according to the example below.

  Example – Steering 2 opposite flows to separate CPUs:

```
# ethtool -N eno0 flow-type ip4 dst-ip 192.168.0.1 action 0
# ethtool -N eno2 flow-type ip4 dst-ip 192.168.1.1 action 1
```

The above setup based on balancing flow processing via receive flow steering (RFS) is synthetic and aims for a very low variability of test results. If the flows are not predetermined, or individual steering of each flow is impractical, then there's the option to balance flow processing by hashing them to different CPUs. The results are less predictable in this case since the flows are less likely to get evenly balanced among CPUs.

Example – Distributing incoming flows via hashing (RSS):

```
# ethtool -K eno0 rxhash on
# ethtool -K eno2 rxhash on
```

- **Reduced system load kernel configuration**

  Additional CPU consuming kernel processes and kernel features that add processing overhead must be reduced to a minimum. This ensures that packet forwarding performance is measured in isolation of other kernel features and evens up benchmark environments among different kernel versions.

  The table below lists the most CPU consuming kernel options known to affect RFC2544 benchmark results on LS1028A that should be disabled.

Table 154. Kernel configs to disable for RFC2544

Kernel config	Comments
CONFIG_FSL_ENETC_PTP_CLOCK, CONFIG_MSCC_FELIX_SWITCH_PTP_CLOCK	Timestamping support in the ENETC and Felix switch drivers.
CONFIG_USB_SUPPORT, CONFIG_MMC, Graphics etc.	CPU consuming peripheral support, i.e.: USB, MMC, graphics.

- **Reduced root file system**

  Following the rationale from the previous point, the Linux root file system used should be minimal to restrict the number of Linux runtime processes.

  As a general guideline, when comparing performance results among different kernel version the list of kernel process (i.e. 'ps ax' command) should be about the same.

For additional general performance optimization guidelines, see the General networking performance considerations section.

8.6.2.5 Known limitations

List of major known limitations for the current driver release.

8.6.2.5.1 External MDIO read issue

External MDIO reads 0 every now and then when ENETC registers are accessed concurrently with MDIO accesses. This is a known hardware erratum (see H/W errata doc).

The current software workaround is to use a global lock across all ENETC register accesses. While the workaround solves the hardware issue, it introduces limitations on the software side. One is the impact on performance due to locking on the fast path. Another issue is that it limits the modularity and virtualization of the ENETC VF driver. Since the VF driver needs to share a global lock with the PF driver, the VF driver can no longer be run independently of the PF driver.

8.6.2.5.1.1 VF module link issues on some kernels

This issue is related to the MDIO read issue above.

The global ENETC registers lock ('`enetc_mdio_lock`'), required by the MDIO read hardware issue workaround, limits the modularity of the VF driver as the lock needs to be shared between the PF and the VF ENETC drivers. Currently on Linux kernel v4.14 the ENETC VF driver fails to build separately as an external kernel module because of this shared lock.

NOTE

Workaround: Both the ENETC PF and VF drivers should be built as kernel built-in modules, instead of external kernel modules.

8.6.2.5.1.2 VF module probing denied due to duplicate symbol

This issue is also related to the MDIO read issue above.

The current MDIO read issue workaround is breaking the modularity of the VF driver by exporting the common '`enetc_mdio_lock`' symbol from both the PF and the VF drivers. If the VF driver is built as an external module, modprobe will issue the following error:

```
# modprobe fsl-enetc-vf
fsl_enetc_vf: exports duplicate symbol enetc_mdio_lock (owned by fsl_enetc)
```

NOTE

Workaround: Both the ENETC PF and VF drivers should be built as kernel built-in modules, instead of external kernel modules.

8.6.2.5.2 VF primary MAC address configuration issues

Changing the primary MAC address for a VF interface from VF context is currently not possible. The following command returns an error code without changing the address:

```
# ip link set eno0vf0 addr aa:bb:cc:dd:ee:ff
```

Also, VF primary MAC address updates from PF context fail to register the new MAC address with the networking stack.

```
# ip link set eno0 vf 0 mac aa:bb:cc:dd:ee:ff
```

Workaround:

Preconfigure all VF primary MAC addresses from U-Boot.

8.6.3 Felix Linux Ethernet driver

8.6.3.1 Introduction

The TSN Gigabit Ethernet switch core, also referred as L2Switch, contains five 10/100/1000/2500 Mbps Ethernet ports and one 10/100/1000 Mbps Ethernet port. It provides a rich set of Ethernet switching features, such as advanced TCAM-based VLAN and QoS processing as well as security processing using a TCAM-based Versatile Content Aware Processor (VCAP).

The device provides PTP (Precision Time Protocol) and TSN (Time Sensitive Networking) support, the later detailed in separate chapters.

NOTE

For additional information, please refer *QorIQ LS1028A Reference Manual* at nxp.com.

8.6.3.2 Linux kernel configuration items

This sections explains how to identify the Felix driver modules and corresponding kernel configuration options, as well as the associated device tree nodes.

8.6.3.2.1 Driver modules and dependencies

The Felix driver has two layers:

- a library supporting common hardware features for Microsemi's Ocelot product family of switch cores

- and a DSA driver module (called Felix) to manage the VSC9959 switch core integrated as a PCIe endpoint device on the LS1028A SoC

On the same SoC, the Felix switch relies on ENETC's central MDIO controller for PHY level services. The dependency on the ENETC's MDIO driver module is summarized in the table below.

Table 155. Driver modules and dependencies

Module	Runtime dependecies	Description
mscc_ocelot_common.ko	-	Common h/w support library for Microsemi Ocelot switch devices
mscc_felix.ko	mscc_ocelot_common.ko , fsl-enetc-mdio.ko	Felix DSA switch driver
fsl-enetc-mdio.ko	-	ENETC Central MDIO controller (PCIe PF 3)

8.6.3.2.2 Kernel configuration options

The kernel configuration tree view for enabling the ENETC PF and VF driver modules via `make menuconfig`:

```
Device Drivers  --->
    [*] Network device support  --->
        [*] Ethernet driver support  --->
            [*] Microsemi devices
                <*> Ocelot switch driver
                < > Ocelot switch driver on Ocelot

Device Drivers  --->
    [*] Network device support  --->
        Distributed Switch Architecture drivers  --->
            <*> Ocelot / Felix Ethernet switch support
```

Table 156. Driver kernel config options

Option	Values	Modules
`CONFIG_MSCC_OCELOT_SWITCH`	y/m/n	mscc_ocelot_common.ko
`CONFIG_NET_DSA_MSCC_FELIX`	y/m/n	mscc_felix.ko
`CONFIG_FSL_ENETC_MDIO`	y/m/n	fsl-enetc-mdio.ko

8.6.3.2.3 Device tree nodes

The Felix switch device tree node is a standard DSA switch node, conforming to the documented device tree bindings for the DSA devices. There is one particularity for this node however, and it comes from the fact that on the LS1028A SoC the switch is integrated as a PCIe endpoint of the on-chip ENETC PCIe root complex. As a result, the `ethernet-switch` node is a sub-node of the PCIe root complex node and its `'reg'` property conforms to the parent node bindings:

- `reg`: Specifies the PCIe Device Number and the Function Number of the endpoint device, in this case, for the Ethernet L2Switch, it is PF5 (of device 0, bus 0).

For the rest of the device tree binding definitions, which are DSA standard, refer to the kernel document:

`Documentation/devicetree/bindings/net/dsa/dsa.txt`

The default structure of the Felix switch device tree node is as follows:

```
ethernet-switch@0,5 {
    reg = <0x000500 0 0 0 0>;
    /* IEP INT_B */
    interrupts = <GIC_SPI 95 IRQ_TYPE_LEVEL_HIGH>;

    ports {
        #address-cells = <1>;
        #size-cells = <0>;

        /* external ports */
        port@0 {
            reg = <0>;
            label = "swp0";
        };
        port@1 {
            reg = <1>;
            label = "swp1";
        };
        port@2 {
            reg = <2>;
            label = "swp2";
        };
        port@3 {
            reg = <3>;
            label = "swp3";
        };

        /* internal to-cpu ports */
        port@4 {
            reg = <4>;
            ethernet = <&enetc_port2>;
            phy-mode = "gmii";
            fixed-link {
                speed = <2500>;
                full-duplex;
            };
        };
        port@5 {
            reg = <5>;
            phy-mode = "gmii";
            status = "disabled";
            fixed-link {
                speed = <1000>;
                full-duplex;
            };
        };
    };
};
```

For the external switch ports, depending on board configuration, ‘phy-mode’ and ‘phy-handle’ are populated by board specific device tree instances.

Also, the CPU port property, which is assigned by default to port@4, may be moved to port@5 depending on specific use cases. See Non-CPU port mode (L2 forwarding) for details.

8.6.3.2.4 Source files

Felix and Ocelot driver sources:

Table 157. Source files

Source files	Description
drivers/net/dsa/ocelot: felix.c, felix.h, felix_vsc9959.c	Felix DSA driver
net/dsa/tag_ocelot.c	DSA tagging support for Ocelot devices
include/soc/mscc: ocelot.h, ocelot_dev.h, ocelot_ana.h, ocelot_sys.h, ocelot_qsys.h, ocelot_hsio.h	Ocelot library's external API
drivers/net/ethernet/mscc: ocelot.c, ocelot.h, ocelot_*.c	Library for Ocelot switch core devices

8.6.3.3 Linux runtime usage

This section describes the major Felix switch features and related usage instructions:

- Felix interfaces and probing
- Connecting to the host CPU
- Single port mode
- Bridge mode
- Gateway mode
- VLAN filtering
- Statistic counters

8.6.3.3.1 Felix interfaces and probing

On successful probing of the DSA Felix switch, each available front panel switch port should have a network device interface attached with the `swpX` name format. The `ip link show` command uses the `swpX@enoY` name format to also indicate the associated master Ethernet interface for the DSA switch port, which corresponds to an internal ENETC interface, usually the `eno2` (Port2) for the LS1028A SoC. The "Interface naming" chapter provides a detailed description of the placement and naming of the front panel switch ports for LS1028ARDB.

Example – Switch port interfaces `swpX` and DSA master interface `eno2` available after probing:

```
# ip link show
[…]
3: eno2: <BROADCAST,MULTICAST> mtu 1532 qdisc noop state DOWN mode DEFAULT group default qlen 1000
    link/ether 4e:c8:97:66:a9:6f brd ff:ff:ff:ff:ff:ff
[…]
6: swp0@eno2: <BROADCAST,MULTICAST,M-DOWN> mtu 1500 qdisc noop state DOWN mode DEFAULT group default
qlen 1000
    link/ether 4e:c8:97:66:a9:6f brd ff:ff:ff:ff:ff:ff
7: swp1@eno2: <BROADCAST,MULTICAST,M-DOWN> mtu 1500 qdisc noop state DOWN mode DEFAULT group default
qlen 1000
    link/ether 4e:c8:97:66:a9:6f brd ff:ff:ff:ff:ff:ff
8: swp2@eno2: <BROADCAST,MULTICAST,M-DOWN> mtu 1500 qdisc noop state DOWN mode DEFAULT group default
```

```
qlen 1000
    link/ether 4e:c8:97:66:a9:6f brd ff:ff:ff:ff:ff:ff
9: swp3@eno2: <BROADCAST,MULTICAST,M-DOWN> mtu 1500 qdisc noop state DOWN mode DEFAULT group default
qlen 1000
    link/ether 4e:c8:97:66:a9:6f brd ff:ff:ff:ff:ff:ff
```

8.6.3.3.2 Connecting to host CPU

On the LS1028A SoC, the L2Switch is connected to the host CPU via two SoC internal MAC-to-MAC port connections between the switch and the corresponding ENETC Ethernet endpoints:

1. ENETC PF2 (or ENETC Port 2) and switch port #4 (2.5G link)
2. ENETC PF6 (or ENETC Port 3) and switch port #5 (1G link)

Out of these two MAC-to-MAC connections with the host CPU, the L2Switch IP allows for a single switch port to work in the CPU port mode.

The following table summarizes the differences between CPU and non-CPU port modes:

CPU port vs non-CPU port modes

Table 158. CPU port vs non-CPU port modes

Feature	CPU port	Non-CPU port
Allows frame injection/extraction	Yes	No
Tags frames with custom header	Yes	No
Is a destination for control frames, for example STP	Yes	No
Supports PTP	Yes	No
Supports flow control	No	Yes
Requires peer net device as proxy	No	Yes
In non-CPU mode, the user needs to use the peer network interface to send and receive packets instead of the actual switch port interface. In CPU port mode, the user will use the net device interface of the switch port or the bridge interface.		

The following figure shows the L2Switch connection with the host CPU.

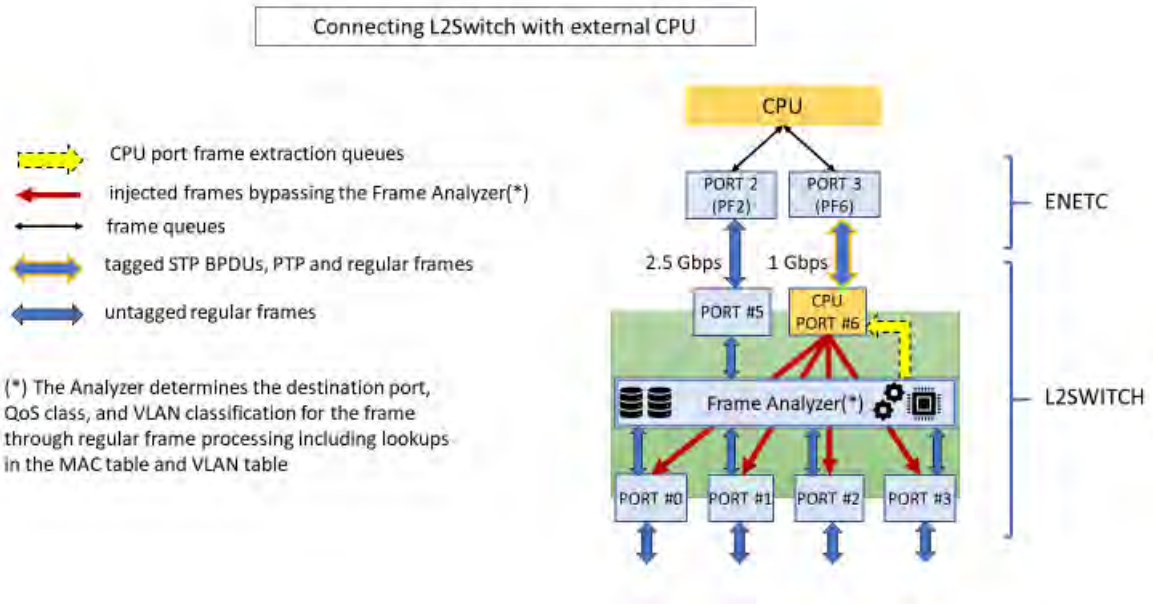

Figure 195. Host CPU connections to the L2Switch

NOTE

By default, the Felix DSA driver uses the 2.5G switch port (port #4) as CPU port while the last internal switch port and corresponding ENETC port are disabled. However, these defaults can be changed by updating the corresponding device tree nodes.

8.6.3.3.2.1 CPU port mode

The CPU port works by providing the means for the host CPU to choose a switch destination port for a frame and address control frames from known protocols, for example STP. In the Felix DSA switch driver setup, the CPU port is connected directly to the master Ethernet interface.

The two important features of the CPU port mode are: frame injection and frame extraction.

8.6.3.3.2.1.1 Frame injection

By using a custom tag or injection header of 128b length prepended before the Ethernet frame header, the driver can instruct the L2Switch to forward the frame on a specific port and bypass the frame analyzer. The analyzer determines the destination port, QoS class, and VLAN classification for the frame through normal frame processing including lookups in the MAC table and VLAN table.

The tagged frame transmission is done from the peer network endpoint device. The peer net device is designated by the **ethernet** device tree property. On reception, the L2Switch will strip the header, apply the frame updates (e.g. write timestamp on PTP frames) and put the frame on the egress queue of the destination port.

Once configured for injection, the switch port accepts only tagged frames.

8.6.3.3.2.1.2 Frame extraction

The L2Switch can intercept a variety of control frames or just normal frames (unicast or multicast) and redirect them to the CPU port. When a frame exits the CPU port, it is also prepended, similar to injection, by a custom tag or a extraction header (128b length). This header needs to be stripped off and decoded by the switch driver to extract the ingress switch port number on which the frame was received.

Once configured for extraction, the switch port emits only tagged frames.

For frame extraction, the switch is configured to add a 128b prefix, called long prefix, on top of the normal 128b extraction header. The reason for this is that the long prefix adds a broadcast header to the frame so that it's always guaranteed to be received by the DSA master device, regardless of the DSA master device's promiscuity mode.

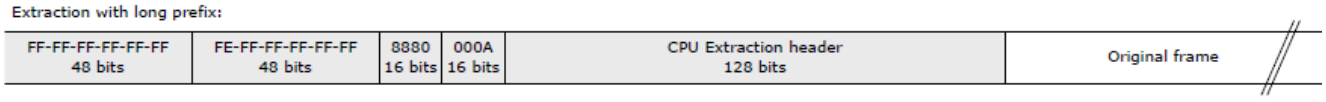

Figure 196. CPU extraction header with long prefix format for extraction frames

8.6.3.3.2.2 Non-CPU port mode (L2 forwarding)

For the SoC internal port that works in the non-CPU mode, the decision to forward the frame to the host CPU or to accept a frame from it depends exclusively on the frame analyzer and the MAC and VLAN tables. As mentioned earlier, the frames transiting a non-CPU port are not carrying any custom tags. In this mode only, the peer net device port (i.e. ENETC Port) acts like a proxy for the switch port, hence the user is required to use the peer's Linux network interface for sending and receiving packets from/to the switch.

The internal non-CPU switch port is disabled by default, as part of the default Felix DSA switch setup which covers most of the user use-cases. However, there are some L2Switch use cases (usually TSN related) that require an internal switch port to work in non-CPU mode.

Example – Enabling the internal 2.5G switch port as non-CPU port for 802.1CB:

The switch core for 802.1CB FRER uses the MAC table (FDB) to assign packets to a Seamless Stream ID (SSID). In turn, the MAC table needs the Analyzer module (ANA) to inspect the frames. But traffic that passes to/from the DSA CPU port bypasses the analyzer module, which means that CPU originated traffic won't be correctly assigned to a SSID for 802.1CB if it's coming through a switch port in CPU mode (i.e. having injection/ extraction headers).

To work around this issue and provide a functional 802.1CB use case, the default DSA CPU port setup is changed as follows for the LS1028RDB board, by patching the corresponding device tree nodes:

1. Internal ENETC Port 3 (eno3) is enabled.
2. Internal L2Switch port #4 (swp4, 2.5G link) is designated as non-CPU port.
3. Internal L2Switch port #5 (swp5, 1G link) is the new CPU port, and eno3 the new DSA master interface.

Changing the DSA master interface from ENETC port 2 (eno2@2.5G) to ENETC port 3 (eno3@1G):

```
diff --git a/arch/arm64/boot/dts/freescale/fsl-ls1028a-rdb.dts b/arch/arm64/boot/dts/freescale/fsl-
ls1028a-rdb.dts
[…]
+&enetc_port3 {
+    status = "okay";
+};
+
[…]
+
+    port@4 {
+        /delete-property/ ethernet;
+    };
+
+    port@5 {
+        status = "okay";
+        ethernet = <&enetc_port3>;
+    };
[…]
```

8.6.3.3.3 Single port mode

In this configuration mode the traffic received on all external ports is forwarded to the CPU port. However, the L2 forwarding is not enabled by default. Each switch port interface can be used independently to send and receive packets.

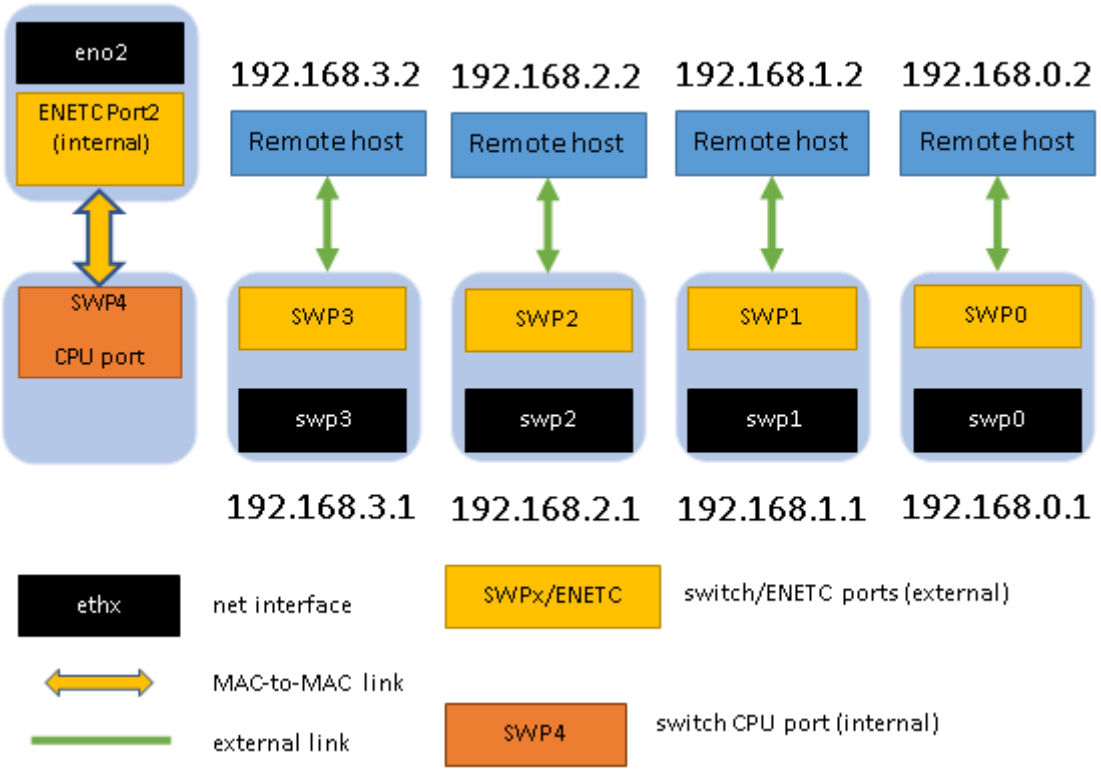

Figure 197. Single port mode switch setup

Example – Single port configuration of the Felix DSA switch driver:

```
#!/bin/bash
#
# configure external switch interfaces
ip addr add 192.168.0.1/24 dev swp0
ip addr add 192.168.1.1/24 dev swp1
ip addr add 192.168.1.1/24 dev swp2
ip addr add 192.168.1.1/24 dev swp3
# master interface to be brought up first
ip link set eno2 up
# bring up the slave interfaces
ip link set swp0 up
ip link set swp1 up
ip link set swp2 up
ip link set swp3 up
```

8.6.3.3.4 Bridge mode

The next diagram describes a basic bridge setup required to test the switch with CPU port configuration and L2 forwarding at the same time. All external switch ports (DSA slave interfaces) are added to a bridge. `eno2` is brought up as the DSA master interface.

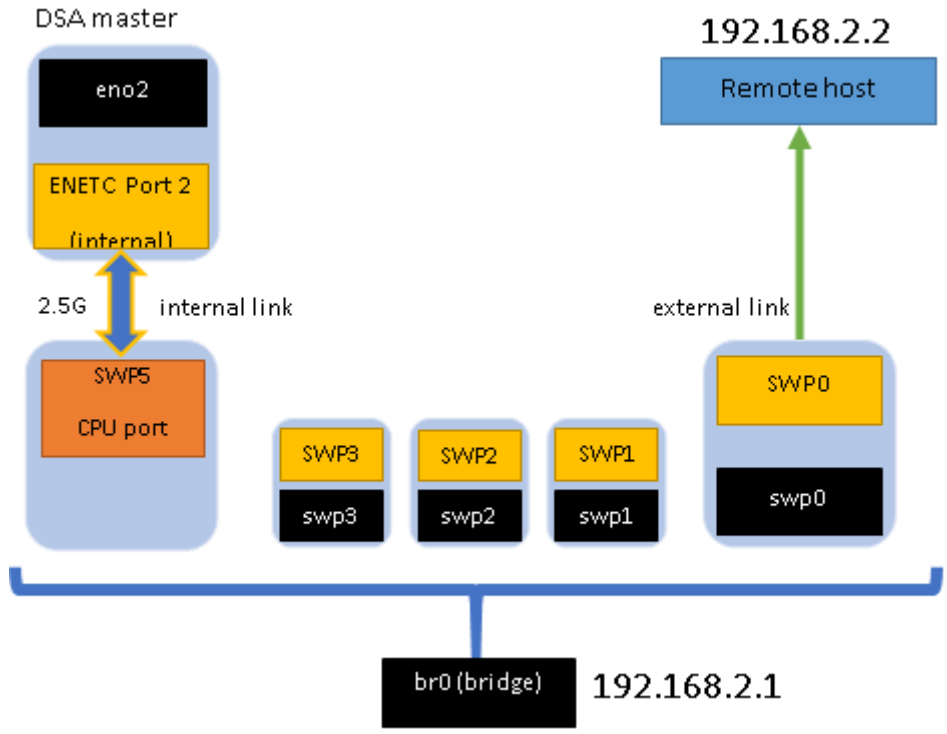

Figure 198. Bridge mode switch setup

Example - Bridge configuration of the Felix DSA switch driver:

```
#!/bin/bash
#
# bring up master interface before the slave ports
ip link set eno2 up

# bring up the slave interfaces
ip link set swp0 up
ip link set swp1 up
ip link set swp2 up
ip link set swp3 up

# create bridge
ip link add name br0 type bridge

# add the external switch ports to the bridge
ip link set dev swp0 master br0
ip link set dev swp1 master br0
ip link set dev swp2 master br0
ip link set dev swp3 master br0

# configure and bring up the bridge
ip addr add 192.168.2.1/24 dev br0
ip link set dev br0 up
```

8.6.3.3.5 Gateway mode

In this mode all the external switch ports, except the one chosen as the upstream port, are added to a bridge. The upstream port can be used a as separate network interface.

Example - Bridge configuration of the Felix DSA switch driver:

```
#!/bin/bash
#
# bring up master interface before the slave ports
ip link set eno2 up

# bring up the slave interfaces
ip link set swp0 up
ip link set swp1 up
ip link set swp2 up
ip link set swp3 up

# configure the upstream port
ip addr add 192.0.2.1/30 dev swp0

# create bridge
ip link add name br0 type bridge

# add the lan ports to the bridge
ip link set dev swp1 master br0
ip link set dev swp2 master br0
ip link set dev swp3 master br0

# configure and bring up the bridge
ip addr add 192.168.2.125/25 dev br0
ip link set dev br0 up
```

8.6.3.3.6 VLAN filtering

There are two components in the Linux kernel for dealing with 802.1Q VLAN tags:

- the 8021q module (activated by `CONFIG_VLAN_8021Q`) for creating VLAN sub-interfaces of network devices with tagged traffic, and
- the `CONFIG_BRIDGE_VLAN_FILTERING` support for implementing 802.1d bridging (port membership enforcements).

The Felix switch on LS1028A is integrated with both frameworks:

- with 8021q module via DSA framework which sets the `NETIF_F_HW_VLAN_CTAG_FILTER` flag for each DSA slave port (external switch port). With this, VLAN sub-interfaces created on top of `swpX` networking devices will have the process of pushing and stripping a VLAN header offloaded to the hardware;
- with the bridge vlan_filtering mode (switching with VLAN awareness), via the switchdev objects for VLAN (`SWITCHDEV_OBJ_ID_PORT_VLAN`).

By default, a Linux bridge is created with VLAN awareness disabled:

```
# ip link add dev br0 type bridge

# for swp in swp0 swp1 swp2 swp3 swp4; do ip link set dev $swp master br0; done
```

"VLAN unaware" means that when the bridge is operating in this mode, it will ignore VLAN tags: if it receives VLAN-tagged frames it will forward them as tagged, and not perform any port membership check.

To make the bridge VLAN-aware, one can either delete the existing bridge and make another one that is VLAN-aware:

```
# ip link del dev br0

# ip link add dev br0 type bridge vlan_filtering 1
```

Or simply toggle the vlan_filtering property on the bridge that already exists:

```
# ip link set dev br0 type bridge vlan_filtering 1
```

When VLAN filtering is enabled on the switch, the 'bridge' tool from iproute2 can be used to manipulate the VLAN tables of the ports.

By default, only the `default_pvid` (1) of the bridge is installed on all the switch ports. So, all VLAN-tagged traffic, except that tagged with VID 1, will be dropped.

NOTE

Since the `pvid` (port-based VLAN) is 1, all untagged traffic will also get internally processed by the switch as having VID 1. So (a) untagged traffic is treated the same as traffic tagged with VID 1, or any other value that the `pvid` may have, and (b) deleting VID 1 from the VLAN table of the switch port will effectively block untagged traffic too.

To install a rule by which the switch port accepts traffic tagged with VLAN 100:

```
# bridge vlan add dev swp0 vid 100
```

It is not enough for the switch to accept this traffic (or rather said: it will accept it, and then drop it due to lack of valid destinations). The egress port must also be part of this VLAN. For example, consider the case where these frames must be terminated on the CPU, assuming the dual-internal-port setup from kernel 4.19 (or the DSA setup from kernel 5.4, with the 802.1CB device tree patch). Here, `swp4/eno2` is the port pair without DSA tagging (non-CPU port mode) and `swp5/eno3` the CPU port pair.

To terminate these frames on `eno2`, the egress port of the switch is `swp4`, and that needs to be made a member of VLAN 100:

```
# bridge vlan add dev swp4 vid 100
```

The above command may be used in conjunction with creating a VLAN sub-interface on top of `eno2`, the internal ENETC host port without DSA headers:

```
# ip link add link eno2 name eno2.100 type vlan id 100 ingress-qos-map 0:0 1:1 2:2 3:3 4:4 5:5 6:6 7:7
egress-qos-map 0:0 1:1 2:2 3:3 4:4 5:5 6:6 7:7
```

```
# ip link set dev eno2.100 up
```

The above setup may be useful for sending in-band QoS hints to the switch when transmitting traffic through the switch ports. By altering the skb priority (by using the SO_PRIORITY API, for example), the VLAN PCP gets set to a value corresponding to a traffic class in the range 0 (best effort) to 7 (highest priority) for packets sent over `eno2.100`. The `swp4` port then processes this VLAN tag, performs a 1-to-1 mapping between VLAN PCP and one of its traffic class queues, and forwards the packet with the appropriate priority to the other port member of the VLAN 100 (`swp0`).

In the setup above, packets will exit `swp0` with the VLAN tag still present. If the tag is not desired, it can be stripped on egress:

```
# bridge vlan del dev swp0 vid 100
```

```
# bridge vlan add dev swp0 vid 100 untagged
```

It is also possible for the switch to tag untagged traffic with a different VLAN ID on ingress:

```
# bridge vlan add dev swp0 vid 100 pvid
```

It is important to keep in mind that "`pvid`" is an ingress property of the VLAN, and "`untagged`" is an egress one. They can also be combined as follows:

```
# bridge vlan add dev swp0 vid 100 pvid untagged
```

8.6.3.3.7 Statistic counters

The Felix switch driver supports `ethtool -S` statistics reporting for each DSA slave switch port through the associated net devices. The DSA master Ethernet interface includes the stats of the internal switch port, the CPU port, along its own Ethernet controller's statistics (ENETC Port), reported via `ethtool -S`.

8.6.3.4 Kernel 4.19

The topics in the section "Felix Linux Ethernet driver" refer to the DSA driver present in Kernel 5.4. Kernel 4.19 reuses the same driver from previous LSDK versions (19.09 and earlier).

8.6.3.4.1 Differences from LSDK 19.09 kernel 4.19

The CPU port configuration is updated similar to the configuration in LSDK 20.04 kernel 5.4. The CPU port pair is swp4/eno2 and the non-tagging internal port pair (swp5/eno3) is disabled by default.

In RCW, both internal port pairs are still enabled, and the CPU port setup can still be reverted to the LSDK 19.09 setup by applying the patch described in section “Non-CPU port mode (L2 forwarding)”.

8.6.3.4.2 Differences from LSDK 20.04 kernel 5.4

Since the 4.19 kernel does not use the DSA framework, the CPU port (swp4) is visible as an interface in ifconfig (same as in LSDK 19.09).

Therefore, the following command is mandatory for kernel 4.19 only:

```
ip link set dev swp4 up
```

Also, in bridging configurations (as described in section “Bridge mode”), the following extra command is also required for kernel 4.19 only:

```
ip link set dev swp4 master br0
```

Collecting ethtool statistics counters on the CPU port is also different between kernel 4.19 and 5.4. In kernel 5.4, counters are collected using the following command:

```
ethtool -S eno2
```

The output contains combined statistics counters from eno2 and swp4.

While in kernel 4.19, the command above will only retrieve statistics counters for the eno2 MAC. To get port counters from the CPU port, the following command should be used:

```
ethtool -S swp4
```

In kernel 5.4, it is possible to send in-band QoS hints through the DSA injection header. Using the SO_PRIORITY API, users can therefore inject into distinct traffic classes for IEEE 802.1Qbv, if the application opens a socket on the swpN ports. In kernel 4.19, this is not possible and in-band QoS hints can only be transmitted through VLAN PCP, on the non-tagging CPU port pair.

Finally, there are also differences regarding VLANs installed on the CPU port. In kernel 4.19, this needs to be done explicitly by the user, as in the command below:

```
bridge vlan add dev swp4 vid 100
```

In kernel 5.4, this is not necessary since VLANs are added automatically by DSA on the CPU port, with the same flags (tagged or untagged), whenever they are added on a front panel port.

8.6.3.5 Known limitations

List of major known limitations for the current driver release.

8.6.3.5.1 Single bridge support

The L2Switch ports can only be added to a single Linux bridge. Splitting the switch ports among multiple bridges is not allowed due to architectural limitations in the hardware.

8.6.3.5.2 Standalone module link fails

When the Felix driver module is built as a standalone module the linker fails to link against ENETC mdio module symbols, giving the following error messages:

```
aarch64-fsl-linux-ld: drivers/net/dsa/ocelot/felix_vsc9959.o: in function `vsc9959_mdio_bus_alloc':
[…]drivers/net/dsa/ocelot/felix_vsc9959.c:816: undefined reference to `enetc_hw_alloc'
aarch64-fsl-linux-ld: /home/nxf34947/cisco/linux-lts-nxp/drivers/net/dsa/ocelot/felix_vsc9959.c:827:
undefined reference to `enetc_mdio_read'
[…]
```

This issue is related to the “External MDIO read issue”, for details refer to the Known Limitations section of the “ENETC Linux Driver User Guide”.

Workaround:

Use the Felix driver module as built-in module.

8.7 Time Sensitive Networking (TSN)

Time Sensitive Networking (TSN) is an extension to traditional Ethernet networks, providing a set of standards compatible with IEEE 802.1 and 802.3. These extensions are intended to address the limitations of standard Ethernet in sectors ranging from industrial and automotive applications to live audio and video systems.Applications running over traditional Ethernet must be designed very robust in order to withstand corner cases such as packet loss, delay or even reordering. TSN aims to provide guarantees for deterministic latency and packet loss under congestion, allowing critical and non-critical traffic to be converged in the same network.

This chapter describes the process and use cases for implementing TSN features on the LS1028ARDB boards.

8.7.1 Using TSN features on LS1028ARDB

The **tsntool** is an application configuration tool to configure the TSN capability on LS1028ARDB. The files **/usr/bin/tsntool** and **/usr/lib/libtsn.so** are located in the rootfs. Run **tsntool** to start the setting shell.

8.7.1.1 Tsntool User Manual

Tsntool is a tool to set the TSN capability of the Ethernet ports of TSN Endpoint and TSN switch. This document describes how to use tsntool for NXP's LS1028ARDB hardware platform.

NOTE

- Tsntool supports only the LS1028ARDB platform. Other hardware platforms might be supported in future.
- Current tsntool binary and lib are default for kernel version v4.19. If you want to use kernel v4.13, you need to clone the tsntool source code, and compile the tag point v0.2 source code.

8.7.1.1.1 Getting the source code

The tsntool source repo is at https://source.codeaurora.org/external/qoriq/qoriq-components/tsntool.git, you can build it by using the following command:

```
flex-builder -c tsntool
```

8.7.1.1.2 Tsn tool commands

The following table lists the TSN tool commands and their description.

Table 159. TSN tool commands and their description

Command	Description
help	Lists commands support
version	Shows software version
verbose	Debugs on/off for tsntool
quit	Quits prompt mode
qbvset	Sets time gate scheduling config for **<**`ifname`**>**
qbvget	Gets time scheduling entries for `<ifname>`
cbstreamidset	Sets stream identification table
cbstreamidget	Gets stream identfication table and counters
qcisfiset	Sets stream filter instance
qcisfiget	Gets stream filter instance
qcisgiset	Sets stream gate instance
qcisgiget	Gets stream gate instance
qcisficounterget	Gets stream filter counters
qcifmiset	Sets flow metering instance
qcifmiget	Gets flow metering instance
cbsset	Sets TCs credit-based shaper configure
cbsget	Gets TCs credit-based shaper status
qbuset	Sets one 8-bits vector showing the preemptable traffic class
qbugetstatus	Not supported
tsdset	Not supported
tsdget	Not supported
ctset	Sets cut through queue status (specific for ls1028 switch)
cbgen	Sets sequence generate configure (specific for ls1028 switch)
cbrec	Sets sequence recover configure (specific for ls1028 switch)
dscpset	Sets queues map to DSCP of Qos tag (specific for ls1028 switch)
sendpkt	Not supported

Table continues on the next page...

Table 159. TSN tool commands and their description (continued)

Command	Description
regtool	Register read/write of bar0 of PFs (specific for ls1028 enetc)

ptptool	ptptool get/set ptp timestamp. Useful commands:
	`#get ptp0 clock time`
	`ptptool -g`
	`#get ptp1 clock time`
	`ptptool -g -d /dev/ptp1`

dscpset	Set queues map to DSCP of QoS tag (specific for ls1028 switch)
qcicapget	Gets qci instance's max capability
tsncapget	Gets device's tsn capability

8.7.1.1.3 Tsntool commands and parameters

This section lists the tsntool commands along with the parameters and arguments, with which they can be used.

Table 160. qbvset

Parameter <argument>	Description
--device <ifname>	An interface such as `eno0/swp0`
--entryfile <filename>	A file script to input gatelist format. It has the following arguments: `#'NUMBER' 'GATE_VALUE' 'TIME_LONG'` • NUMBER: # 't' or 'T' head. Plus entry number. Duplicate entry number will result in an error. • GATE_VALUE: # format: xxxxxxxxb . # The MSB corresponds to traffic class 7. The LSB corresponds to traffic class 0. # A bit value of 0 indicates closed, whereas, a bit value of 1 indicates open. • TIME_LONG: # nanoseconds. Do not input 0 time long. t0 11101111b 10000 t1 11011111b 10000 **NOTE** `Entryfile` parameter must be set. If not set, there will be a vi text editor prompt, "`require to input the gate list`".
--basetime <value>	AdminBaseTime A 64-bit hex value means nano second until now. OR a value input format as: `Seconds.nanoSeconds` Example: `115.532038675`
--cycletime <value>	AdminCycleTime
--cycleextend <value>	AdminCycleTimeExtension

Table continues on the next page...

Table 160. qbvset (continued)

Parameter <argument>	Description
--enable | --disable	• enable: enables the `qbv` for this port • disable: disables the `qbv` for this port Default is set to enable, if no enable or disable input
--maxsdu <value>	queueMaxSDU
--initgate <value>	AdminGateStates
--configchange	ConfigChange. Default set to 1.
--configchangetime <value>	ConfigChangeTime

Table 161. qbvget

Parameter <argument>	Description
--device <ifname>	An interface such as `eno0/swp0`

Table 162. cbstreamidset

Parameter <argument>	Description
--enable | --disable	• enable: Enables the entry for this index. • disable: Disables the entry for this index. Default is set to `enable` if no enable or disable input
--index <value>	Index entry number in this controller. Mandatory parameter.
--device <string>	An interface such as `eno0/swp0`
--streamhandle <value>	tsnStreamIdHandle
--infacoutport <value>	tsnStreamIdInFacOutputPortList
--outfacoutport <value>	tsnStreamIdOutFacOutputPortList
--infacinport <value>	tsnStreamIdInFacInputPortList
--outfacinport <value>	tsnStreamIdOutFacInputPortList
--nullstreamid | --sourcemacvid | --destmacvid | --ipstreamid	tsnStreamIdIdentificationType: • -nullstreamid:Null Stream identification • -sourcemacvid: Source MAC and VLAN Stream identification • -destmacvid: not supported • -ipstreamid: not supported

Table continues on the next page...

Table 162. cbstreamidset (continued)

Parameter <argument>	Description
--nulldmac <value>	tsnCpeNullDownDestMac
--nulltagged <value>	tsnCpeNullDownTagged
--nullvid <value>	tsnCpeNullDownVlan
--sourcemac <value>	tsnCpeSmacVlanDownSrcMac
--sourcetagged <value>	tsnCpeSmacVlanDownTagged
--sourcevid <value>	tsnCpeSmacVlanDownVlan

Table 163. cbstreamidget

Parameter <argument>	Description
--device <ifname>	An interface such as `eno0/swp0`
--index <value>	Index entry number in this controler. Mandatory to have.

Table 164. qcisfiset

Parameter <argument>	Description
--device <ifname>	An interface such as `eno0/swp0`
--enable | --disable	• enable: enable the entry for this index • disable: disable the entry for this index • default to set `enable` if no enable or disable input
--maxsdu <value>	Maximum SDU size.
--flowmeterid <value>	Flow meter instance identifier index number.
--index <value>	StreamFilterInstance. index entry number in this controler.
--streamhandle <value>	StreamHandleSpec This value corresponds to `tsnStreamIdHandle` of `cbstreamidset` command.
--priority <value>	PrioritySpec
--gateid <value>	StreamGateInstanceID
--oversizeenable	StreamBlockedDueToOversizeFrameEnable
--oversize	StreamBlockedDueToOversizeFrame

Table 165. qcisfiget

parameter <argument>	Description
--device <ifname>	An interface such as `eno0/swp0`
--index <value>	Index entry number in this controller. Mandatory to have.

Table 166. qcisgiset

Parameter <argument>	Description
--device <ifname>	An interface such as `eno0/swp0`
--index <value>	Index entry number in this controller. Mandatory to have.
--enable | --disable	• enable: enable the entry for this index. PSFPGateEnabled • disable: disable the entry for this index • default to set enable if no enable or disable input
--configchange	configchange
--enblkinvrx	PSFPGateClosedDueToInvalidRxEnable
--blkinvrx	PSFPGateClosedDueToInvalidRx
--initgate	PSFPAdminGateStates
--initipv	AdminIPV
--cycletime	Default not set. Get by gatelistfile.
--cycletimeext	PSFPAdminCycleTimeExtension
--basetime	PSFPAdminBaseTime A 64-bit hex value means nano second until now. OR a value input format as: `Seconds.nanoSeconds` Example: `115.532038675`
--gatelistfile	PSFPAdminControlList. A file input the gate list: 'NUMBER' 'GATE_VALUE' 'IPV' 'TIME_LONG' 'OCTET_MAX' • NUMBER: # 't' or 'T' head. Plus entry number. Duplicate entry number will result in an error. • GATE_VALUE: format: xb: The MSB corresponds to traffic class 7. The LSB corresponds to traffic class 0. A bit value of 0 indicates closed, A bit value of 1 indicates open. • IPV: # 0~7 • TIME_LONG: in nanoseconds. Do not input time long as 0. • OCTET_MAX: The maximum number of octets that are permitted to pass the gate. If zero, there is no maximum. t0 1b -1 50000 10

Table 167. qcisgiget

Parameter <argument>	Description
--device <ifname>	An interface such as `eno0/swp0`
--index <value>	Index entry number in this controller. Mandatory to have.

Table 168. qcifmiset

Parameter <argument>	Description
--device <ifname>	An interface such as `eno0/swp0`
--index <value>	Index entry number in this controller. Mandatory to have.
--disable	If not set disable, then to be set enable.
--cir <value>	cir. kbit/s.
--cbs <value>	cbs. octets.
--eir <value>	eir.kbit/s.
--ebs <value>	ebs.octets.
--cf	cf. couple flag.
--cm	cm. color mode.
--dropyellow	drop yellow.
--markred_enable	mark red enable.
--markred	mark red.

Table 169. qcifmiget parameter

Parameter <argument>	Description
--device <ifname>	An interface such as `eno0/swp0`
--index <value>	Index entry number in this controller. Mandatory to have.

Table 170. qbuset parameter

Parameter <argument>	Description
--device <ifname>	An interface such as `eno0/swp0`
--preemptable <value>	8-bit hex value. Example: 0xfe The MS bit corresponds to traffic class 7. The LS bit to traffic class 0. A bit value of 0 indicates express. A bit value of 1 indicates preemptable.

Table 171. cbsset command

Parameter <argument>	Description
--device <ifname>	An interface such as `eno0/swp0`
--tc <value>	Traffic class number.
--percentage <value>	Set percentage of tc limitation.
--all <tc-percent:tc-percent...>	Not supported.

Table 172. cbsget

Parameter <argument>	Description
--device <ifname>	An interface such as `eno0/swp0`
--tc <value>	Traffic class number.

Table 173. regtool

Parameter <argument>	Description
Usage: regtool { pf number } { offset } [data]	pf number: pf number for the pci resource to act on
	offset: offset into pci memory region to act upon
	data: data to be written

Table 174. ctset

Parameter <argument>	Description
--device <ifname>	An interface such as `swp0`
--queue_stat <value>	Specifies which priority queues have to be processed in cut-through mode of operation. Bit 0 corresponds to priority 0, Bit 1 corresponds to priority 1 so-on.

Table 175. cbgen

Parameter <argument>	Description
--device <ifname>	An interface such as `swp0`
--index <value>	Index entry number in this controller. Mandatory to have. This value corresponds to `tsnStreamIdHandle` of `cbstreamidset` command.
--iport_mask <value>	INPUT_PORT_MASK: If the packet is from input port belonging to this port mask, then it's a known stream and Sequence generation parameters can be applied

Table continues on the next page...

Table 175. cbgen (continued)

Parameter <argument>	Description
--split_mask <value>	SPLIT_MASK: Port mask used to add redundant paths (or ports). If split is enabled (STREAM_SPLIT) for a stream. This is OR'ed with the final port mask determined by the forwarding engine.
--seq_len <value>	SEQ_SPACE_LOG2: Minimum value is 1 and maximum value is 28. `tsnSeqGenSpace = 2**SEQ_SPACE_LOG2` For example, if this value is 12, then valid sequence numbers are from 0x0 to 0xFFF.
--seq_num <value>	GEN_REC_SEQ_NUM: The sequence number to be used for outgoing packet passed to `SEQ_GEN` function. Note: Only lower 16-bits are sent in RED_TAG.

Table 176. cbrec

Parameter <argument>	Description
--device <ifname>	An interface such as `swp0`
--index <value>	Index entry number in this controller. Mandatory to have. This value corresponds to `tsnStreamIdHandle` of `cbstreamidset` command.
--seq_len <value>	SEQ_SPACE_LOG2:Min value is 1 and maximum value is 28. `tsnSeqRecSeqSpace = 2**SEQ_REC_SPACE_LOG2` For example, if this value is 12, then valid sequence numbers are from 0x0 to 0xFFF.
--his_len <value>	SEQ_HISTORY_LEN: Refer to SEQ_HISTORY, Min 1 and Max 32.
--rtag_pop_en	REDTAG_POP: If True, then the redundancy tag is popped by rewriter.

Table 177. dscpset

Parameter <argument>	Description
--device <ifname>	An interface such as `swp0`
--disable	Disable DSCP to traffic class for frames.
--index	DSCP value
--cos	Priority number of queue which is mapped to
--dpl	Drop level which is mapped to

Table 178. qcicapget

Parameter <argument>	Description
--device <ifname>	An interface such as swp0

Table 179. tsncapget

Parameter <argument>	Description
--device <ifname>	An interface such as swp0

8.7.1.1.4 Input tips

While providing the command input, you can use the following shortcut keys to make the input faster:

- When you input a command, use the **TAB** key to help list the related commands.

  For example:

  ```
  tsntool> qbv
  ```

  Then press **TAB** key, to get all related `qbv*` start commands.

  If there is only one choice, it is filled as the whole command automatically.

- When you input parameters, if you don't remember the parameter name. You can just input "--" then press **TAB** key. It displays all the parameters.

  If you input half the parameter's name, pressing the **TAB** key lists all the related names.

- History: press the up arrow "↑" . You will get the command history and can re-use the command.

8.7.1.1.5 Non-interactive mode

Tsntool also supports non-interactive mode.

For example:

In the interactive mode:

```
tsntool> qbuset --device eno0 --preemptable 0xfe
```

In non-interactive mode:

```
tsntool qbuset --device eno0 --preemptable 0xfe
```

8.7.1.2 Kernel configuration

Before compiling the Linux kernel, we need to configure it. In the kernel, select the configuration settings displayed below:

```
 Symbol: TSN [=y]
    | Type : boolean
    | Prompt: 802.1 Time-Sensitive Networking support
    | Location:
    | -> Networking support (NET [=y])
    | -> Networking options
    | Depends on: NET [=y] && VLAN_8021Q [=y] && PTP_1588_CLOCK [=y]
|
  Symbol: ENETC_TSN [=y]
    | Type : boolean
    | Prompt: TSN Support for NXP ENETC driver
    | Location:
    | -> Device Drivers
    | -> Network device support (NETDEVICES [=y])
    | -> Ethernet driver support (ETHERNET [=y])
    | -> Freescale devices (NET_VENDOR_FREESCALE [=y])
```

```
    | Defined at drivers/net/ethernet/freescale/enetc/Kconfig:41
    | Depends on: NETDEVICES [=y] && ETHERNET [=y] && NET_VENDOR_FREESCALE [=y] && FSL_ENETC [=m] &&
TSN [=y]
|
  Symbol: FSL_ENETC_PTP_CLOCK [=y]
    | Type : tristate
    | Prompt: ENETC PTP clock driver
    | Location:
    | -> Device Drivers
    | -> Network device support (NETDEVICES [=y])
    | -> Ethernet driver support (ETHERNET [=y])
    | -> Freescale devices (NET_VENDOR_FREESCALE [=y])
|
  Symbol: FSL_ENETC_HW_TIMESTAMPING [=y]
    | Type : boolean
    | Prompt: ENETC hardware timestamping support
    | Location:
    | -> Device Drivers
    | -> Network device support (NETDEVICES [=y])
    | -> Ethernet driver support (ETHERNET [=y])
    | -> Freescale devices (NET_VENDOR_FREESCALE [=y])
|
   Symbol: MSCC_FELIX_SWITCH_TSN [=y]
    | Type : tristate
    | Prompt: TSN on FELIX switch driver
    | Location:
    | -> Device Drivers
    |   -> Network device support (NETDEVICES [=y])
    |    -> Ethernet driver support (ETHERNET [=y])
    |     -> Microsemi devices (NET_VENDOR_MICROSEMI [=y])
    |      -> Ocelot switch driver (MSCC_OCELOT_SWITCH [=y])
    |      -> FELIX switch driver (MSCC_FELIX_SWITCH [=y])
    | Defined at drivers/net/ethernet/mscc/Kconfig:38

Symbol: NET_PKTGEN [=y]
    | Type  : tristate
    | Prompt: Packet Generator (USE WITH CAUTION)
    | Location:
    |     -> Networking support (NET [=y])
    |     -> Networking options
    |     -> Network testing
    |  Defined at net/Kconfig:325
    |  Depends on: NET [=y] && INET [=y] && PROC_FS [=y]

Symbol: MSCC_FELIX_SWITCH_PTP_CLOCK [=y]
     | Type  : boolean
     | Prompt: FELIX switch PTP clock support
     | Location:
     | -> Device Drivers
     |    -> Network device support (NETDEVICES [=y])
     |        -> Ethernet driver support (ETHERNET [=y])
     |             -> Microsemi devices (NET_VENDOR_MICROSEMI [=y])
     |                   -> Ocelot switch driver (MSCC_OCELOT_SWITCH [=y])
     |                       -> FELIX switch driver (MSCC_FELIX_SWITCH [=y])
     | Defined at drivers/net/ethernet/mscc/Kconfig:38
     | Depends on: NETDEVICES [=y] && ETHERNET [=y] && NET_VENDOR_MICROSEMI
     | Selects: PTP_1588_CLOCK [=y]
```

8.7.1.3 Basic TSN configuration examples on ENETC

The tsntool is an application configuration tool to configure the TSN capability. You can find the file, `/usr/bin/tsntool` and `/usr/lib/libtsn.so` in the rootfs. Run `tsntool` to start the setting shell. The following sections describe the TSN configuration examples on the ENETC ethernet driver interfaces.

Before testing the ENETC TSN test cases, you need to enable `mqprio` by using the command:

```
tc qdisc add dev eno0 root handle 1: mqprio num_tc 8 map 0 1 2 3 4 5 6 7 hw 1
```

8.7.1.3.1 Linuxptp test

To test 1588 synchronization on ENETC interfaces, use the following procedure:

1. Connect ENETC interfaces on two boards in a back-to-back manner. (For example, eno0 to eno0.)

   The linux booting log is as follows:

   ```
   …
   pps pps0: new PPS source ptp0
   …
   ```

2. Check PTP clock and timestamping capability:

   ```
   # ethtool -T eno0
   Time stamping parameters for eno0:
   Capabilities:
       hardware-transmit          (SOF_TIMESTAMPING_TX_HARDWARE)
       hardware-receive           (SOF_TIMESTAMPING_RX_HARDWARE)
       hardware-raw-clock         (SOF_TIMESTAMPING_RAW_HARDWARE)
   PTP Hardware Clock: 0
   Hardware Transmit Timestamp Modes:
        off         (HWTSTAMP_TX_OFF)
        on          (HWTSTAMP_TX_ON)Hardware Receive Filter Modes:
        none        (HWTSTAMP_FILTER_NONE)
        all         (HWTSTAMP_FILTER_ALL)
   ```

3. Configure the IP address and run `ptp4l` on two boards:

   ```
   # ifconfig eno0 <ip_addr>
   # ptp4l -i eno0 -p /dev/ptp0 -m
   ```

4. After running, one board would be automatically selected as the master, and the slave board would print synchronization messages.

5. For 802.1AS testing, just use the configuration file `gPTP.cfg` in linuxptp source. Run the below command on the boards, instead:

   ```
   # ptp4l -i eno0 -p /dev/ptp0 -f gPTP.cfg -m
   ```

8.7.1.3.2 Qbv test

This test includes the Basic gates closing test, Basetime test, and the Qbv performance test. These are described in the following sections.

8.7.1.3.2.1 Basic gates closing

The commands below describe the steps for closing the basic gates:

```
cat > qbv0.txt << EOF
t0      00000000b               20000
EOF
```

```
#Explanation:
# 'NUMBER'        :     t0
# 'GATE_VALUE'    :     00000000b
# 'TIME_LONG'     :     20000 ns
```

```
cp libtsn.so /lib
./tsntool
tsntool> verbose
tsntool> qbvset --device eno0 --entryfile ./qbv0.txt

ethtool -S eno0
ping 192.168.0.2 -c 1   #Should not pass any frame since gates are all off.
```

8.7.1.3.2.2 Basetime test

Base on case 1 `qbv1.txt` gate list.

```
#create 1s gate
cat > qbv1.txt << EOF
t0  11111111b      10000
t1  00000000b      99990000
EOF

tsntool> regtool 0 0x18
tsntool> regtool 0 0x1c

#read the current time
tsntool> ptptool -g

#add some seconds, for example, you get 200.666 time clock, then set 260.666 as result

tsntool> qbvset --device eno0 --entryfile qbv1.txt --basetime 260.666
tsntool> qbvget --device eno0 #You can check configchange time
tsntool> regtool 0 0x11a10 #Check pending status, 0x1 means time gate is working

#Waiting to change state, ping remote computer
ping 192.168.0.2 -A -s 1000

#The reply time will be about 100 ms
```

Since 10000 ns is the maximum limit for package size 1250 B.

```
ping 192.168.0.2 -c 1 -s 1300 #frame should not pass
```

8.7.1.3.2.3 Qbv performance test

Use the setup described in the figure below for testing ENETC port0 (MAC0).

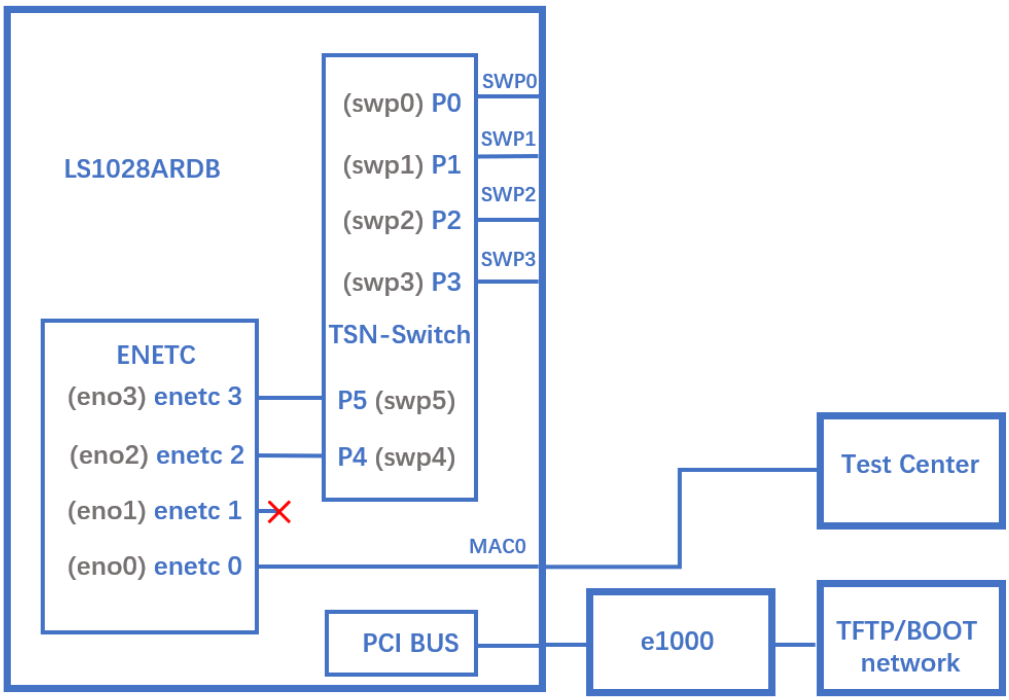

Figure 199. Setup for testing ENETC port0

```
cat > qbv5.txt << EOF
t0  11111111b      1000000
t1  00000000b      1000000
EOF

qbvset --device eno0 --entryfile qbv5.txt
./pktgen/pktgen_twoqueue.sh -i eno0 -q 3 -n 0

#The stream would get about half line rate
```

8.7.1.3.3 Qci test cases

Use the following as the background setting:

- Set eno0 MAC address

  ```
  ip link set eno0 address 10:00:80:00:00:00
  ```

  TestCenter MAC address **99:aa:bb:cc:dd:ee** as an example.

- Use the figure below as the hardware setup.

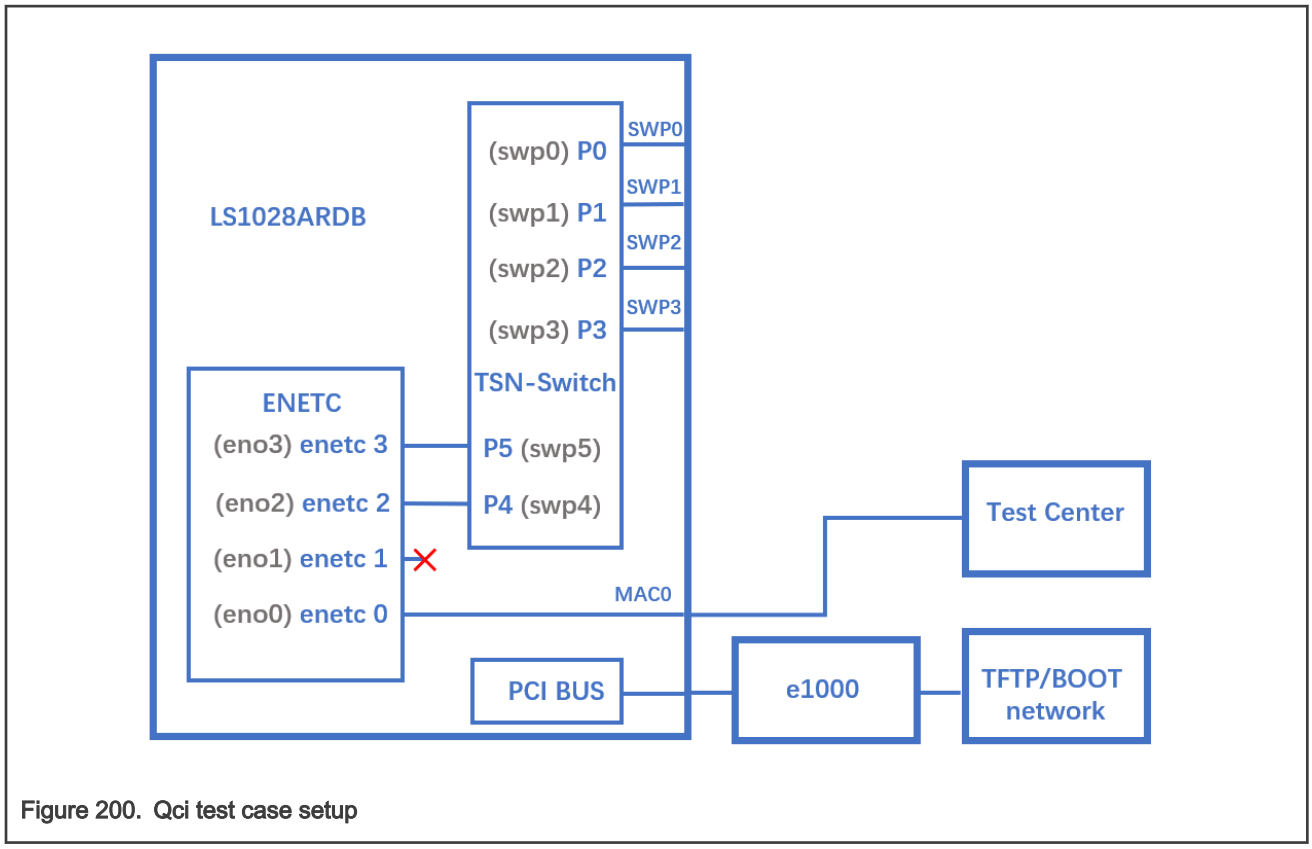

Figure 200. Qci test case setup

8.7.1.3.3.1 Test SFI No Streamhandle

To test no streamhandle for a stream filter, set a close gate stream id 2. Then no stream identifies the package check and other streams would pass the gate, as shown in the following example:

```
tsntool> qcisfiset --device eno0 --index 2 --gateid 2
```

- Streams no streamhandle should pass this filter.

```
tsntool> qcisfiget --device eno0 --index 2
```

- Send a frame from the Test center.

```
tsntool> qcisfiget --device eno0 --index 2
```

- Set Stream Gate entry 2

```
tsntool> qcisgiset --device eno0 --index 2 --initgate 1
```

- Send a frame from the Test center.

```
tsntool> qcisfiget --device eno0 --index 2
```

- Set Stream Gate entry 2, gate closes permanently.

```
tsntool> qcisgiset --device eno0 --index 2 --initgate 0
```

- Send a frame from the Test center.

```
tsntool> qcisfiget --device eno0 --index 2

#The result should look like below:
 match  pass  gate_drop  sdu_pass  sdu_drop red
   1   0   1     1    0    0
```

8.7.1.3.3.2 Testing null stream identify entry

Use the following steps:

1. Set main stream by close gate.
2. Set Stream identify Null stream identify entry 1.

```
tsntool> cbstreamidset --device eno0 --index 1 --nullstreamid --nulldmac
0x000000800010 --nulltagged 3 --nullvid 10 --streamhandle 100
```

3. Get SID index 1.

```
tsntool> cbstreamidget --device eno0 --index 1
```

4. Set Stream filer entry 1.

```
tsntool> qcisfiset --device eno0 --streamhandle 100 --index 1 --gateid 1
```

5. Set Stream Gate entry 1.

```
tsntool> qcisgiset --device eno0 --index 1 --initgate 0
```

6. Send one frame from the Test center.

```
tsntool> qcisfiget --device eno0 --index 1
```

7. The result should look like the output below:

```
match pass gate_drop sdu_pass sdu_drop red
1 0 1 1 0 0
```

8.7.1.3.3.3 Testing source stream identify entry

Use the following steps for this test:

1. Keep Stream Filter entry 1 and Stream gate entry 1.
2. Add stream2 in test center: `SMAC is 66:55:44:33:22:11 DMAC:20:00:80:00:00:00`
3. Set Stream identify Source stream identify entry 3

```
tsntool> cbstreamidset --device eno0 --index 3 --sourcemacvid --sourcemac 0x112233445566 --
sourcetagged 3 --sourcevid 20 --streamhandle 100
```

4. Send frame from test center. The frame passes to stream filter index 1.

```
tsntool> qcisfiget --device eno0 --index 1
```

8.7.1.3.3.4 SGI stream gate list

Use the command below for this test:

```
cat > sgi1.txt << EOF
t0 0b -1 1000 0
t1 1b -1 1000 0
EOF
tsntool> qcisfiset --device eno0 --index 2 --gateid 2
tsntool> qcisgiset --device eno0 --index 2 --initgate 1 --gatelistfile sgi1.txt

#flooding frame size 64bytes at test center
tsntool> qcisfiget --device eno0 --index 2
```

Check the frames dropped and passed, they should be the same.

8.7.1.3.3.5 FMI test

Only send green color frames, set the test center speed to 10000000 bsp/s:

```
tsntool> qcisfiset --device eno0 --index 2 --gateid 2 --flowmeterid 2
tsntool> qcifmiset --device eno0 --index 2 --cm --cf --cbs 1500 --cir 5000000 --ebs 1500 --eir 5000000
```

The below setting shows the dropped frames:

```
tsntool> qcifmiset --device eno0 --index 2 --cm --cf --cbs 1500 --cir 5000000 --ebs 1500 --eir 2000000
```

To get information of color frame counters showing at application layer, use the code as in the below example:

```
tsntool> qcifmiget --device eno0 --index 2
========================================================================
bytecount drop dr0_green dr1_green dr2_yellow remark_yellow dr3_red remark_red
1c89 0 4c 0 0 0 0 0
========================================================================
index = 2
cir = c34c
cbs = 5dc
eir = 4c4b3c
ebs = 5dc
couple flag
color mode
```

8.7.1.3.4 Qbu test

Set the frame path from eno0 to external by linking enetc MAC0 - SWP0. Use the setup as shown in the following figure for the Qbu test.

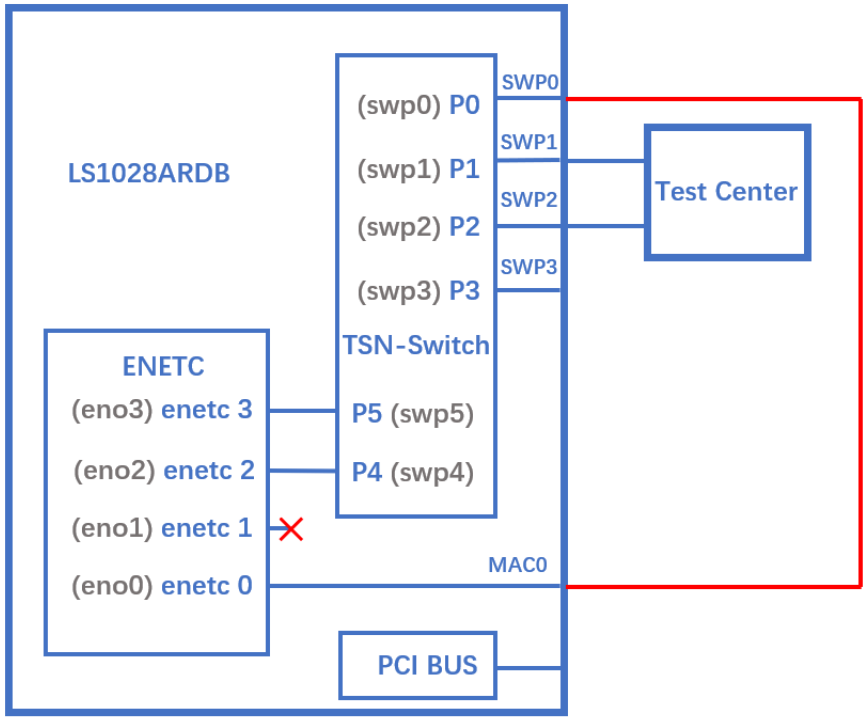

Figure 201. Qbu test

Before the test, need to setup the switch ports, see chapter Switch configuration for more information.

NOTE

0x11f10 Port MAC Merge Frame Assembly OK Count Register

```
0x11f18 Port MAC Merge Fragment Count TX Register (MAC_MERGE_MMFCTXR)
```

For linking the ENETC port0 to SWP0, use the steps below:

1. Make sure link speed is 1 Gbps by using the command:

   ```
   ethtool eno0
   ```

2. If it is not 1Gbps, set it to 1 Gbps by using the command:

   ```
   ethtool -s swp0 speed 1000 duplex full autoneg on
   ```

   Make sure that the `swp0` and `enec0` link is up.

3. Set the switch to enable merge:

   ```
   devmem 0x1fc100048 32 0x111 #DEV_GMII:MM_CONFIG:ENABLE_CONFIG
   ```

4. Use the below ENETC port setting:

   ```
   ip link set eno0 address 90:e2:ba:ff:ff:ff
   tsntool> qbuset --device eno0 --preemptable 0xfe
   ./pktgen/pktgen_twoqueue.sh -i eno0 -q 0 -s 100 -n 20000 -m 90:e2:ba:ff:ff:ff
   ```

5. Check the tx merge counter, if it has a non-zero value, it indicates that the Qbu is working.

```
tsntool> regtool 0 0x11f18
```

8.7.1.3.5 Qav test

The following figure illustrates the hardware setup diagram for the Qav test.

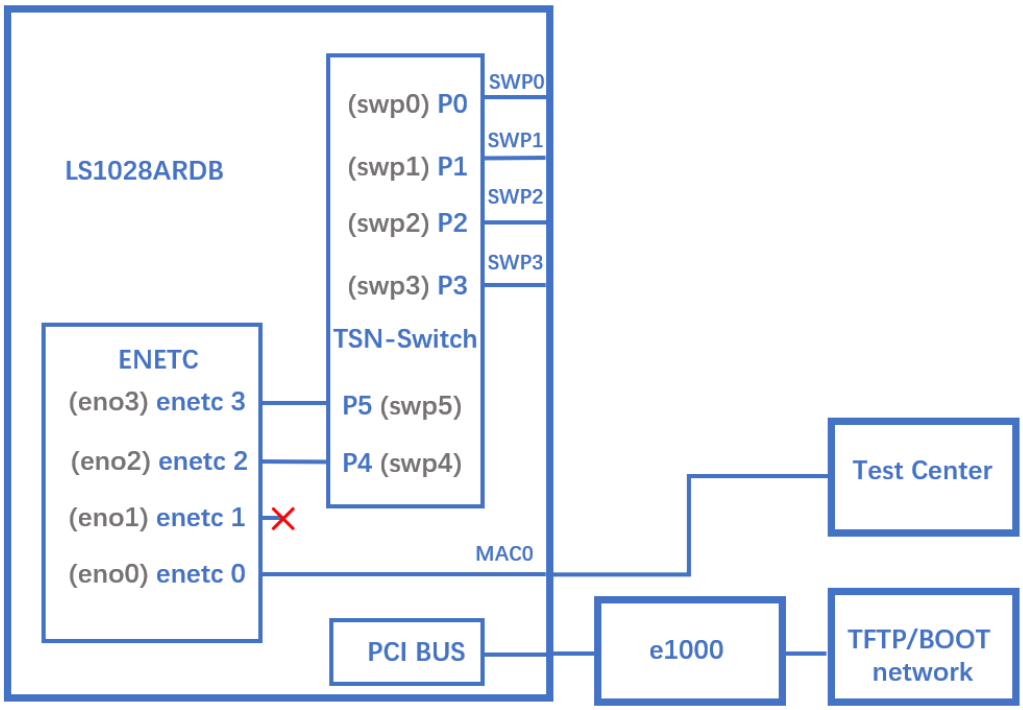

Figure 202. Qav test setup

1. Run the following commands:

```
cbsset --device eno0 --tc 7 --percentage 60
cbsset --device eno0 --tc 6 --percentage 20
```

2. Check the test center result, TC6 should have 1/3 frames of TC7.
3. Check one queue:

```
./pktgen/pktgen_sample01_simple.sh -i eno0 -q 7 -s 500 -n 0
```

It should get about 60% percentage line rate.

8.7.1.4 Basic TSN configuration examples on the switch

The following sections describe examples for the basic configuration of TSN switch.

8.7.1.4.1 Switch configuration

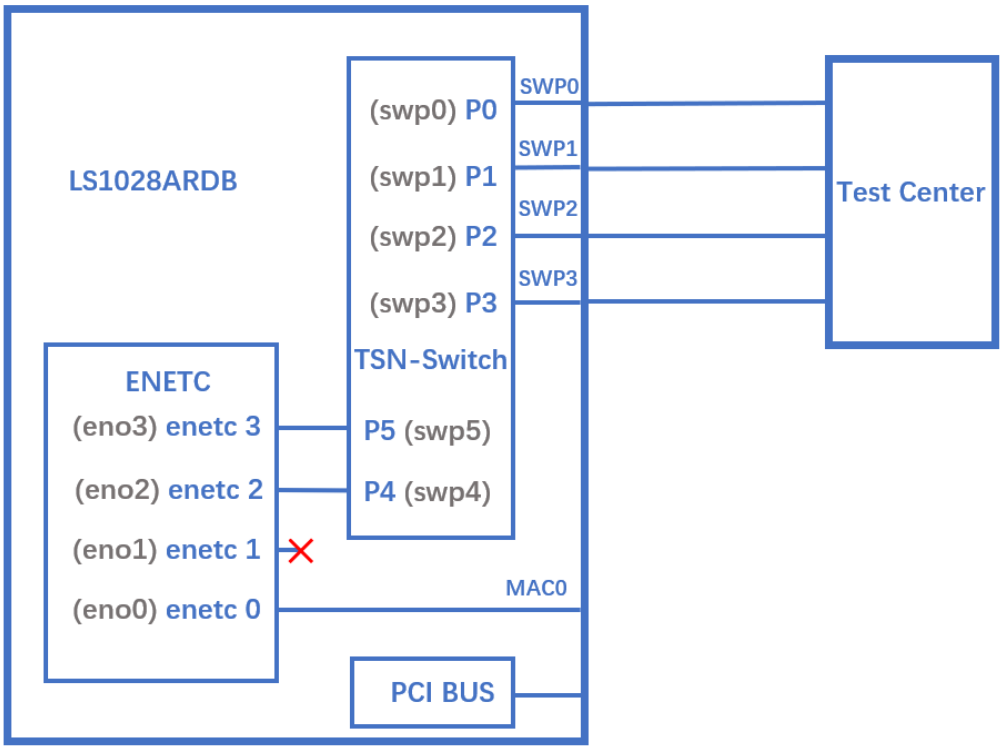

Figure 203. TSN switch configuration

Use the following commands for configuring the switch on LS1028ARDB:

```
ls /sys/bus/pci/devices/0000:00:00.5/net/
```

Get switch device interfaces: swp0 swp1 swp2 swp3>

```
ifconfig eno2 up
ip link add name switch type bridge
ip link set switch up
ip link set swp0 master switch && ip link set swp0 up
ip link set swp1 master switch && ip link set swp1 up
ip link set swp2 master switch && ip link set swp2 up
ip link set swp3 master switch && ip link set swp3 up
ip link set swp4 master switch && ip link set swp4 up /* In Kernel-4.19*/
```

8.7.1.4.2 Linuxptp test

To test 1588 synchronization on felix-switch interfaces, use the following procedure:

1. Connect two boards back-to-back with switch interfaces. For example, swp0 to swp0.

   The Linux booting log is displayed below:

   ```
   …
   pps pps0: new PPS source ptp1
   …
   ```

2. Check PTP clock and timestamping capability

```
$ ethtool -T swp0
Time stamping parameters for swp0:
Capabilities:
     hardware-transmit  (SOF_TIMESTAMPING_TX_HARDWARE)
     hardware-receive   (SOF_TIMESTAMPING_RX_HARDWARE)
     hardware-raw-clock (SOF_TIMESTAMPING_RAW_HARDWARE)
PTP Hardware Clock: 1
Hardware Transmit Timestamp Modes:
      off   (HWTSTAMP_TX_OFF)
      on    (HWTSTAMP_TX_ON)
 Hardware Receive Filter Modes:
      none  (HWTSTAMP_FILTER_NONE)
      all   (HWTSTAMP_FILTER_ALL)
```

3. Set switch ip on two board, and ping each other.

```
$ ifconfig switch 192.168.1.2 /* On board A */
$ ifconfig switch 192.168.1.3 /* On board B */
$ ping 192.168.1.3 /* On board A */
```

4. For 802.1AS testing, use the configuration file `gPTP.cfg` in linuxptp source. Run the below commands on the two boards instead.

```
$ ptp4l -i swp0 -p /dev/ptp1 -f gPTP.cfg -2 -m
```

NOTE

Install ptp4l (linuxptp), if not installed already in ubuntu rootfs. Also, stop and disable ptp4l.service in case of failure; as used needs to write it as per the requirement. ptp4l v1.8 is used for LSDK verification.

```
# apt update
# apt install linuxptp
# systemctl stop ptp4l.service
# systemctl disable ptp4l.service
```

8.7.1.4.3 Qbv test

The following figure describes the setup for Qbv test on LS1028ARDB.

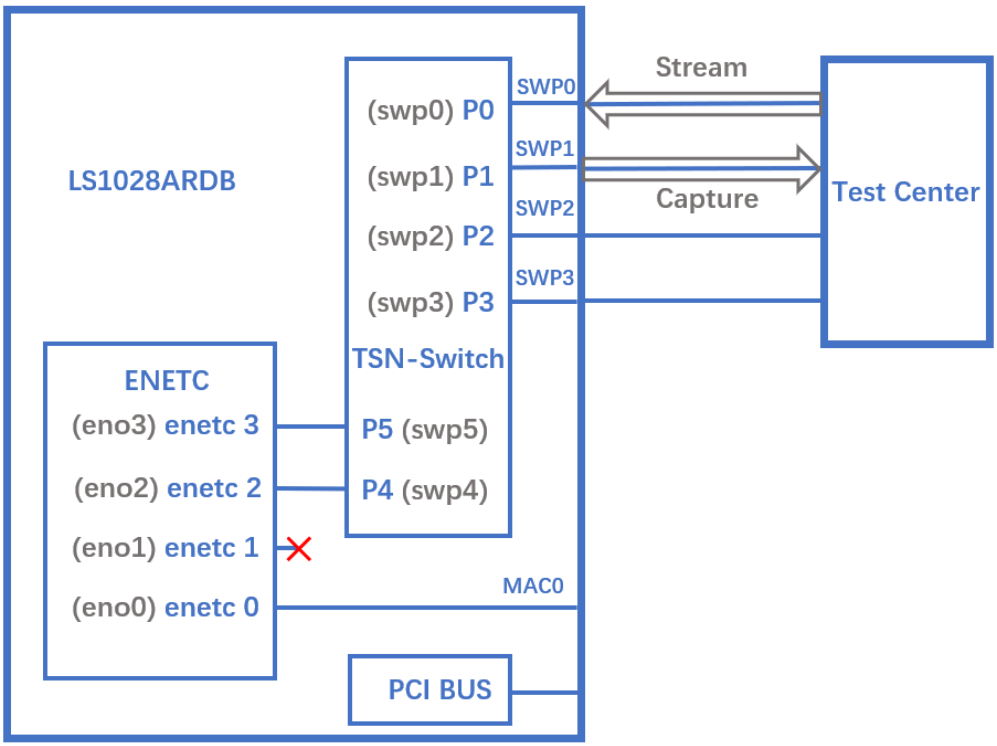

Figure 204. Qbv test

8.7.1.4.3.1 Closing basic gates

Use the set of commands below for basic gate closing.

```
echo “t0 00000000b 20000” > qbv0.txt
#Explaination:
# 'NUMBER'      :  t0
# 'GATE_VALUE'  :  00000000b
# 'TIME_LONG'   :  20000 ns

./tsntool
tsntool> verbose
tsntool> qbvset --device swp1 --entryfile ./qbv0.txt

#Send one broadcast frame to swp0 from TestCenter.
ethtool -S swp1
#Should not get any frame from swp1 on TestCenter.

echo “t0 11111111b 20000” > qbv0.txt
tsntool> qbvset --device swp1 --entryfile ./qbv0.txt

#Send one broadcast frame to swp0 on TestCenter.
ethtool -S swp1
#Should get one frame from swp1 on TestCenter.
```

8.7.1.4.3.2 Basetime test

For the basetime test, first get the current second time:

```
#Get current time:
tsntool> ptptool -g -d /dev/ptp1

#add some seconds, for example you get 200.666 time clock, then set 260.666 as result
tsntool> qbvset --device swp1 --entryfile ./qbv0.txt --basetime 260.666

#Send one broadcast frame to swp0 on the Test Center.
#Frame could not pass swp1 until time offset.
```

8.7.1.4.3.3 Qbv performance test

Use the following commands for the QBv performance test:

```
cat > qbv5.txt << EOF
t0 11111111b 1000000
t1 00000000b 1000000
EOF
qbvset --device swp1 --entryfile qbv5.txt
```

#Send 1G rate stream to swp0 on TestCenter.

#The stream would get about half line rate from swp1.

8.7.1.4.4 Qbu test

The figure below illustrates the setup for performing the Qbu test using the TSN switch.

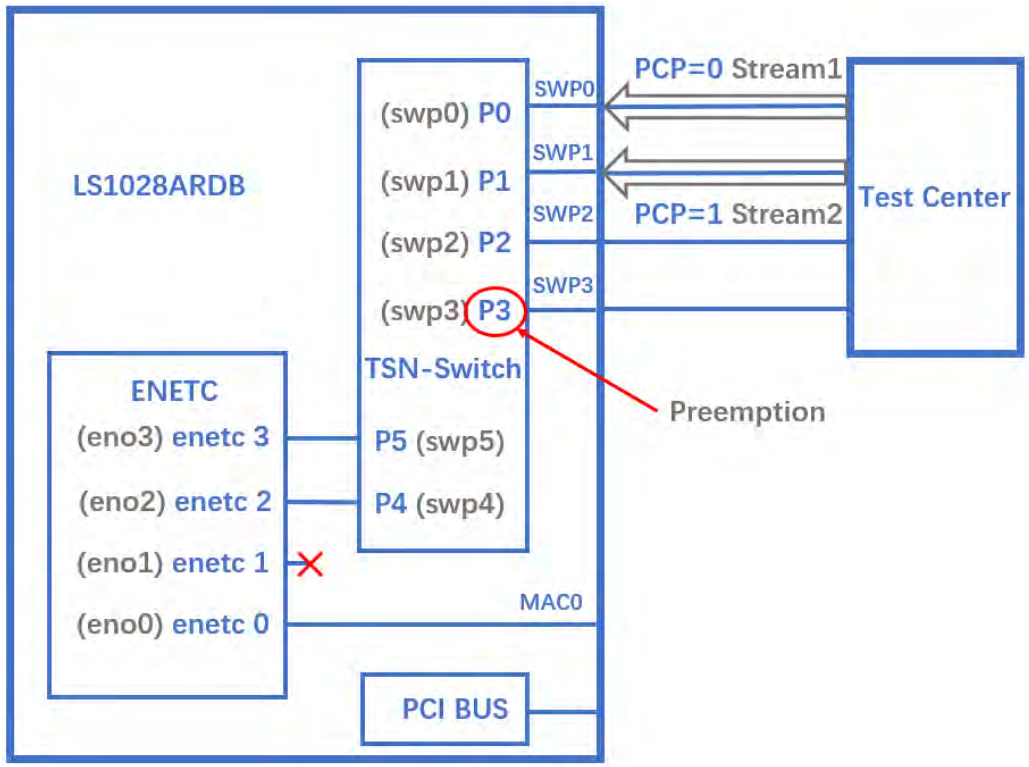

Figure 205. Qbu test on switch

1. Set queue 1 to be preemptable.

```
tsntool> qbuset --device swp3 --preemptable 0x02
```

2. Send two streams from TestCenter, then check the number of additional mPackets transmitted by PMAC:

```
devmem 0x1fc010e48 32 0x3 && devmem 0x1fc010280
```

8.7.1.4.5 Qci test cases

The figure below illustrates the Qci test case setup.

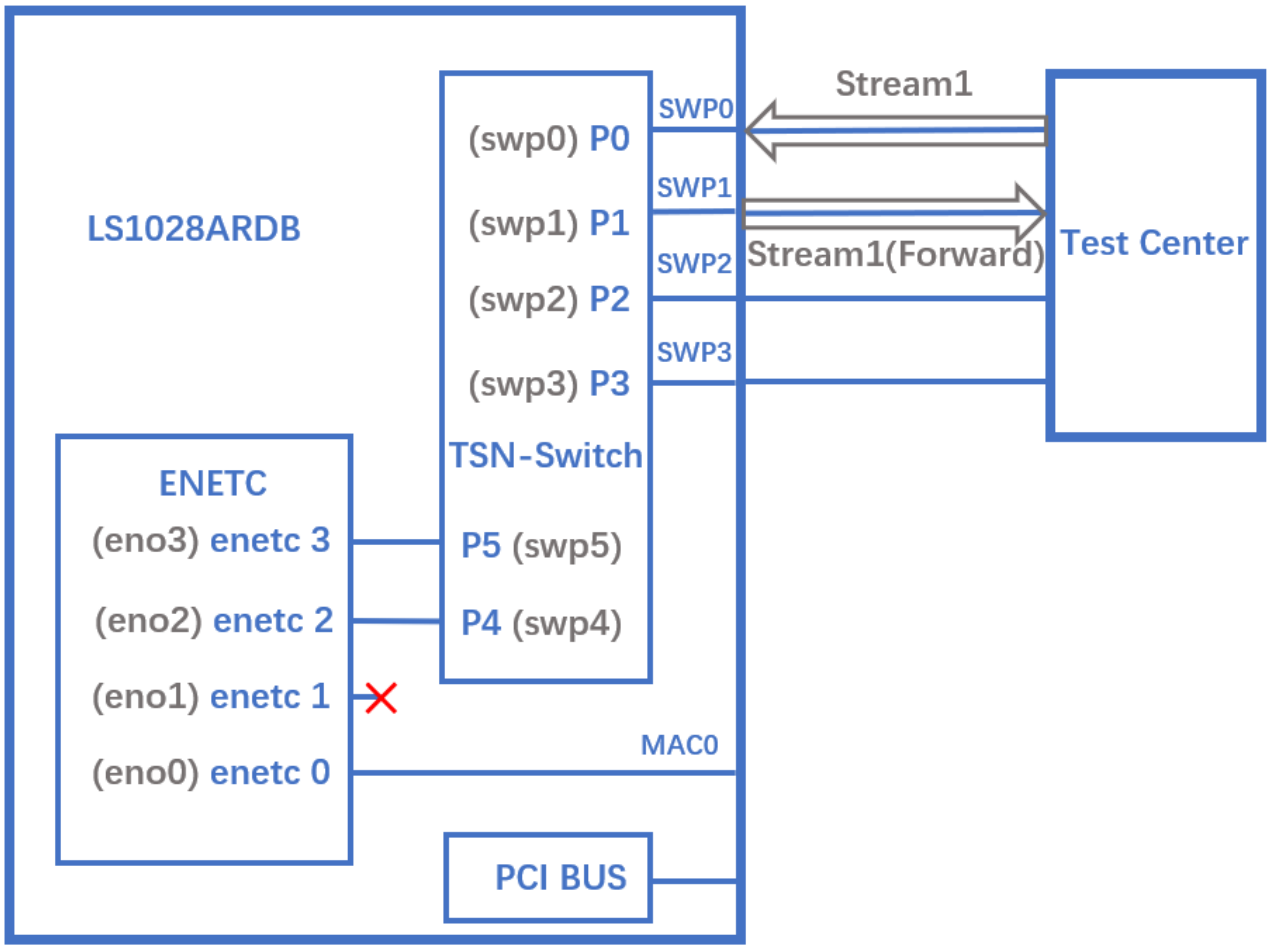

Figure 206. Qci test case

8.7.1.4.5.1 Stream identification

Use the following commands for stream identification:

1. Configure switch ports and add ports into Vlan 1.

```
ip link del switch
ip link add name switch type bridge vlan_filtering 1
ip link set switch up
ip link set swp0 master switch && ip link set swp0 up
ip link set swp1 master switch && ip link set swp1 up
ip link set swp2 master switch && ip link set swp2 up
ip link set swp3 master switch && ip link set swp3 up
bridge vlan add dev swp0 vid 1 pvid
bridge vlan add dev swp1 vid 1 pvid
bridge vlan add dev swp2 vid 1 pvid
bridge vlan add dev swp3 vid 1 pvid
```

2. Set a stream to `swp0` on TestCenter.

3. Edit the stream, set the destination MAC as: `00:01:83:fe:12:01, Vlan ID : 1`

```
tsntool> cbstreamidset --device swp1 --nullstreamid --index 1 --nulldmac  0x000183fe1201 --
nullvid 1 --streamhandle 1
```

Explanation:

- `device`: set the device port which is the stream forwarded to. If the {destmac, VID} is already learned by switch, switch will not care device port.
- `nulltagged`: switch only support nulltagged=1 mode, so there is no need to set it.
- `nullvid`: Use "bridge vlan show" to see the ingress VID of switch port.

```
tsntool> qcisfiset --device swp0 --index 1 --gateid 1 --priority 0 --flowmeterid 68
```

Explanation:

- `device`: can be any one of switch ports.
- `flowmeterid`: PSFP Policer id, ranges from 63 to 383.

4. Send one frame, then check the frames.

```
ethtool -S swp1
ethtool -S swp2
```

Only `swp1` can get the frame.

5. Use the following command to check and debug the stream identification status.

```
 qcisfiget --device swp0 --index 1
```

NOTE

The parameter **`streamhandle`** is the same as `index` in stream filter set, we use `streamhandle` in `cbstreamidset` to set a stream filter entry, and use `index` to disable it. Also, we use `index` in `cbstreamidget` to get this stream filter entry.

8.7.1.4.5.2 Stream gate control

1. Use the following commands for stream gate control:

```
echo "t0 1b 3 50000 200" > sgi.txt
tsntool> qcisgiset --device swp0 --enable --index 1 --initgate 1 --initipv 0 --gatelistfile
sgi.txt --basetime 0x0
```

Explanation:

- 'device': can be any one of switch ports.
- 'index': gateid
- 'basetime' : It is the same as Qbv set.

2. Send one frame on TestCenter.

```
ethtool -S swp1
```

Note that the frame could pass, and green_prio_3 has increased.

3. Now run the following commands:

```
echo "t0 0b 3 50000 200" > sgi.txtx
tsntool> qcisgiset --device swp0 --enable --index 1 --initgate 1 --initipv 0 --gatelistfile
sgi.txt --basetime 0x0
```

4. Next, send one frame on TestCenter.

```
ethtool -S swp1
```

Note that the frame could not pass.

8.7.1.4.5.3 SFI maxSDU test

Use the following command to run this test:

```
tsntool> qcisfiset --device swp0 --index 1 --gateid 1 --priority 0 --flowmeterid 68 --maxsdu 200
```

Now, send one frame (frame size > 200) on TestCenter.

```
ethtool -S swp1
```

You can observe that the frame could not pass.

8.7.1.4.5.4 FMI test

Use the following set of commands for the FMI test.

1. Run the command:

```
tsntool> qcifmiset --device swp0 --index 68 --cir 100000 --cbs 4000 --ebs 4000 --eir 100000
```

NOTE

- The 'device' in above command can be any one of the switch ports.
- The index of `qcifmiset` must be the same as flowmeterid of `qcisfiset`.

2. Now, send one stream (rate = 100M) on TestCenter.

```
ethtool -S swp0
```

Note that all frames pass and get all green frames.

3. Now, send one stream (rate = 200M) on TestCenter.

```
ethtool -S swp0
```

Observe that all frames pass and get green and yellow frames.

4. Send one stream (rate = 300M) on TestCenter.

```
ethtool -S swp0
```

Note that not all frames could pass and get green, yellow, and red frames.

5. Send one yellow stream (rate = 100M) on TestCenter.

```
ethtool -S swp0
```

All frames pass and get all yellow frames.

6. Send one yellow stream (rate = 200M) on TestCenter.

```
ethtool -S swp0
```

Note that not all frames could pass and get yellow and red frames.

7. Test cf mode.

```
tsntool> qcifmiset --device swp0 --index 68 --cir 100000 --cbs 4000 --ebs 4000 --eir 100000 --cf
```

8. Send one yellow stream (rate = 200M) on TestCenter.

```
ethtool -S swp0
```

All frames pass and get all yellow frames (use CIR as well as EIR).

9. Send one yellow stream (rate = 300M) on TestCenter.

```
ethtool -S swp0
```

Note that not all frames could pass and get yellow and red frames.

8.7.1.4.6 Qav test case

The below figure illustrates the Qav test case setup.

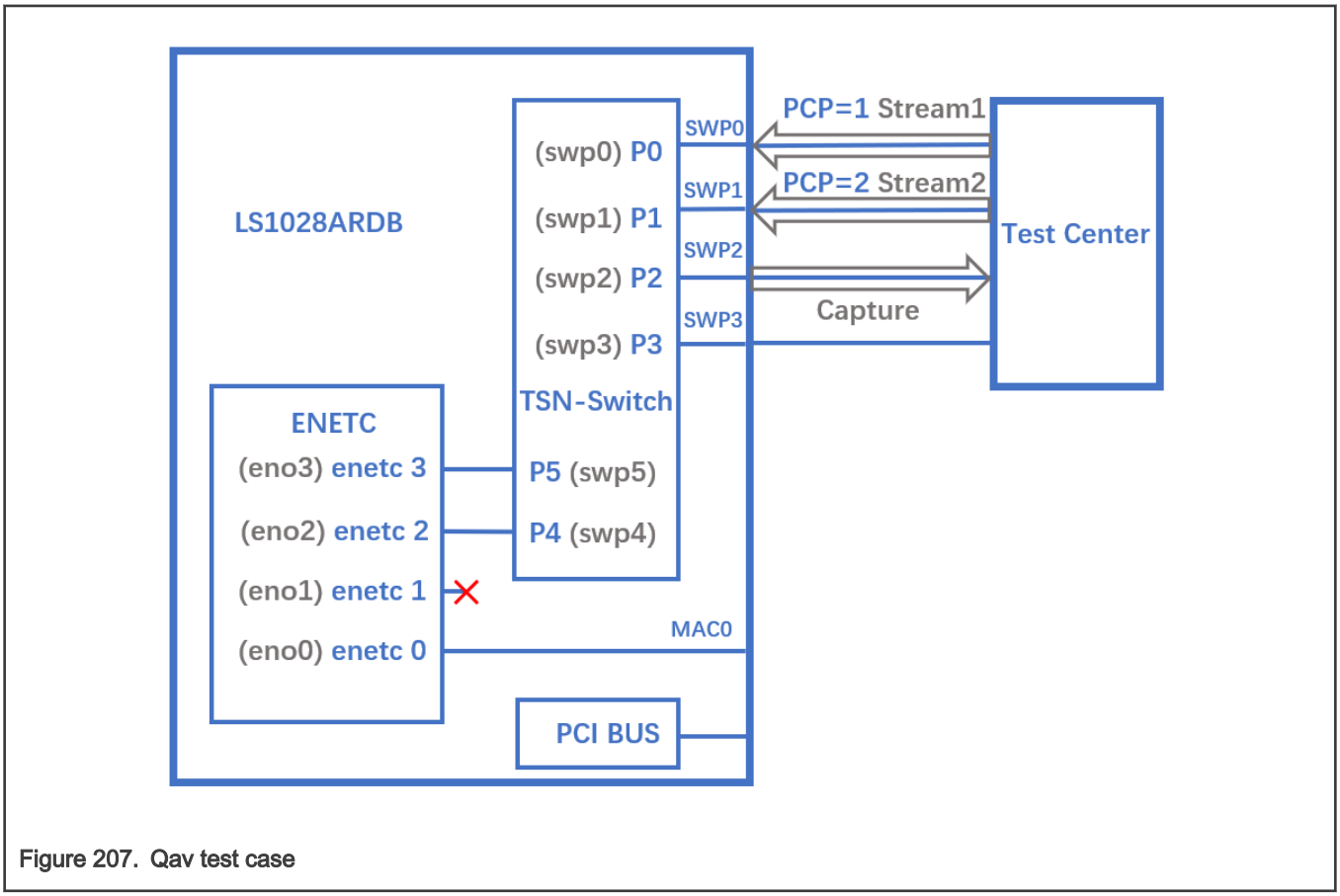

Figure 207. Qav test case

1. Set the percentage of two traffic classes:

```
tsntool> cbsset --device swp2 --tc 1 --percentage 20
tsntool> cbsset --device swp2 --tc 2 --percentage 40
```

2. Send two streams from Test center, then check the frames count.

```
ethtool -S swp2
```

Note that the frame count of queue1 is half of queue2.

NOTE

Stream rate must lager than bandwidth limited of queue.

3. Capture frames on swp2 on TestCenter.

```
# The Get Frame sequence is: (PCP=1), (PCP=2), (PCP=2), (PCP=1), (PCP=2), (PCP=2),…
```

8.7.1.4.7 Seamless redundancy test case

The following figure describes the test setup for the seamless redundancy test case.

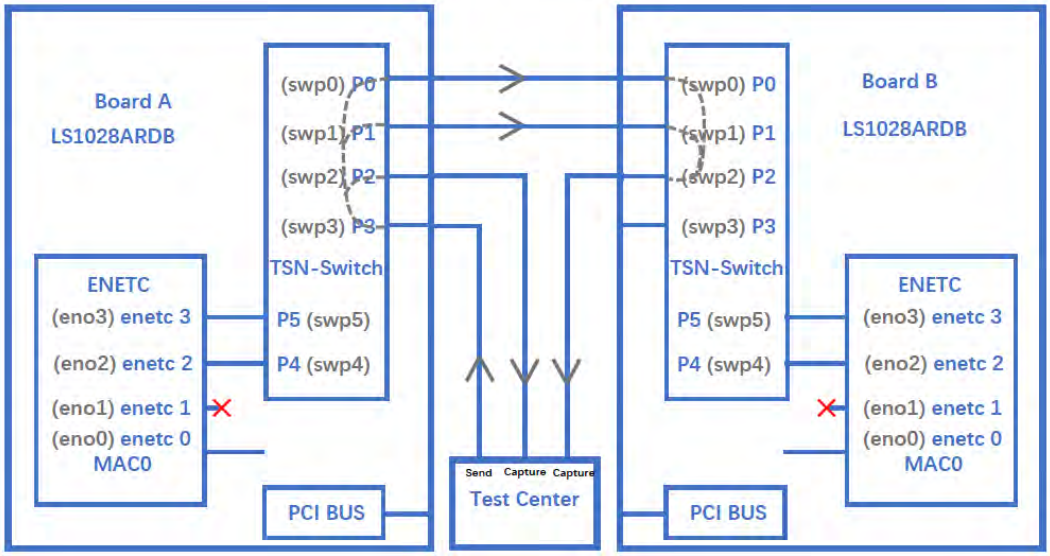

Figure 208. Seamless redundancy test

8.7.1.4.7.1 Sequence Generator test

Use the following set of commands for the 'Sequence Generator' test.

1. Configure switch ports to be forward mode.

On board A:

```
ip link add name switch type bridge vlan_filtering 1
ip link set switch up
ip link set swp0 master switch && ip link set swp0 up
ip link set swp1 up
ip link set swp2 master switch && ip link set swp2 up
ip link set swp3 master switch && ip link set swp3 up
bridge vlan add dev swp0 vid 1 pvid
bridge vlan add dev swp1 vid 1 pvid
```

```
bridge vlan add dev swp2 vid 1 pvid
bridge vlan add dev swp3 vid 1 pvid
```

On board B

```
 ip link add name switch type bridge vlan_filtering 1
 ip link set switch up
 ip link set swp0 master switch && ip link set swp0 up
 ip link set swp1 master switch && ip link set swp1 up
 ip link set swp2 master switch && ip link set swp2 up
 ip link set swp3 master switch && ip link set swp3 up
 bridge vlan add dev swp0 vid 1 pvid
bridge vlan add dev swp1 vid 1 pvid
bridge vlan add dev swp2 vid 1 pvid
bridge vlan add dev swp3 vid 1 pvid
```

2. On board A, run the commands:

```
tsntool> cbstreamidset --device swp0 --nullstreamid --nulldmac 0x7EA88C9B41DD --nullvid 1 --
streamhandle 1
tsntool> cbgen --device swp0 --index 1 --iport_mask 0x08 --split_mask 0x07 --seq_len 16 --
seq_num 2048
```

   In the command above,

   - `device`: can be any one of switch ports.
   - `index`: value is the same as streamhandle of cbstreamidset.

3. Send a stream from TestCenter to swp3 of board A, set destination mac as 7E:A8:8C:9B:41:DD.
4. Capture frames on swp2 on TestCenter.

   We can get frames from swp2 on TestCenter, each frame adds the sequence number: 23450801, 23450802, 23450803…

5. Capture frames from swp2 of board B on TestCenter, we can get the same frames.

8.7.1.4.7.2 Sequence Recover test

Use the following steps for the **Sequence Recover** test:

1. On board B, run the following commands:

```
tsntool> cbstreamidset --device swp2  --nullstreamid --nulldmac 0x7EA88C9B41DD --nullvid 1  --
streamhandle 1
tsntool> cbrec --device swp0 --index 1 --seq_len 16 --his_len 31 --rtag_pop_en
```

   In the cbrec command mentioned above:

   - `device`: can be any one of switch ports.
   - `index`: value is the same as `streamhandle` of `cbstreamidset`.

2. Send a frame from TestCenter to swp3 of board A, set dest mac to be 7E:A8:8C:9B:41:DD.
3. Capture frames from swp2 of board B on TestCenter, we can get only one frame without sequence tag.

8.7.1.4.8 TSN stream identification

TSN module uses QoS class to identify and control streams. There are three ways to identify the stream to different QoS class. These are explained in the following sections.

8.7.1.4.8.1 Stream identification based on PCP value of Vlan tag

The default QoS class is based on PCP of Vlan tag for a frame. If there is no Vlan tag for a frame, the default QoS class is 0.

Set the PCP value on TestCenter.

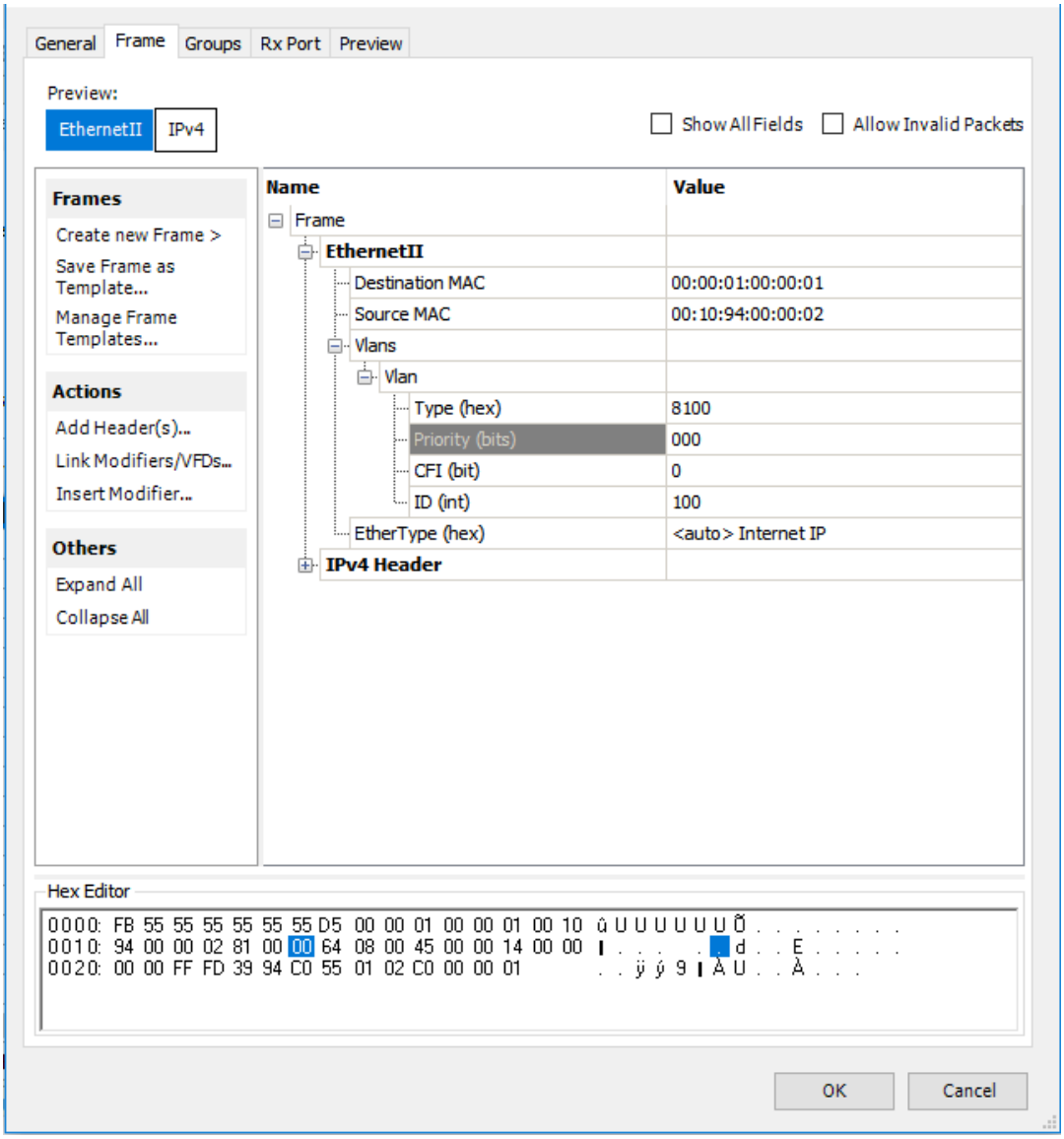

Figure 209. Using PCP value of Vlan tag

8.7.1.4.8.2 Based on DSCP of ToS tag

Use the below steps to identify stream based on DSCP value of ToS tag.

1. Map the DSCP value to a specific QoS class using the command below:

```
tsntool> dscpset --device swp0 --index 1 --cos 1 --dpl 0
```

Explanation:

- `index`: DSCP value of stream, 0-63.
- `cos`: QoS class which is mapped to.

- `dpl`: Drop level which is mapped to.

2. Set the DSCP value on TestCenter. DSCP value is the upper six bits of ToS in IP header, set the DSCP value on TestCenter as shown in the following figure.

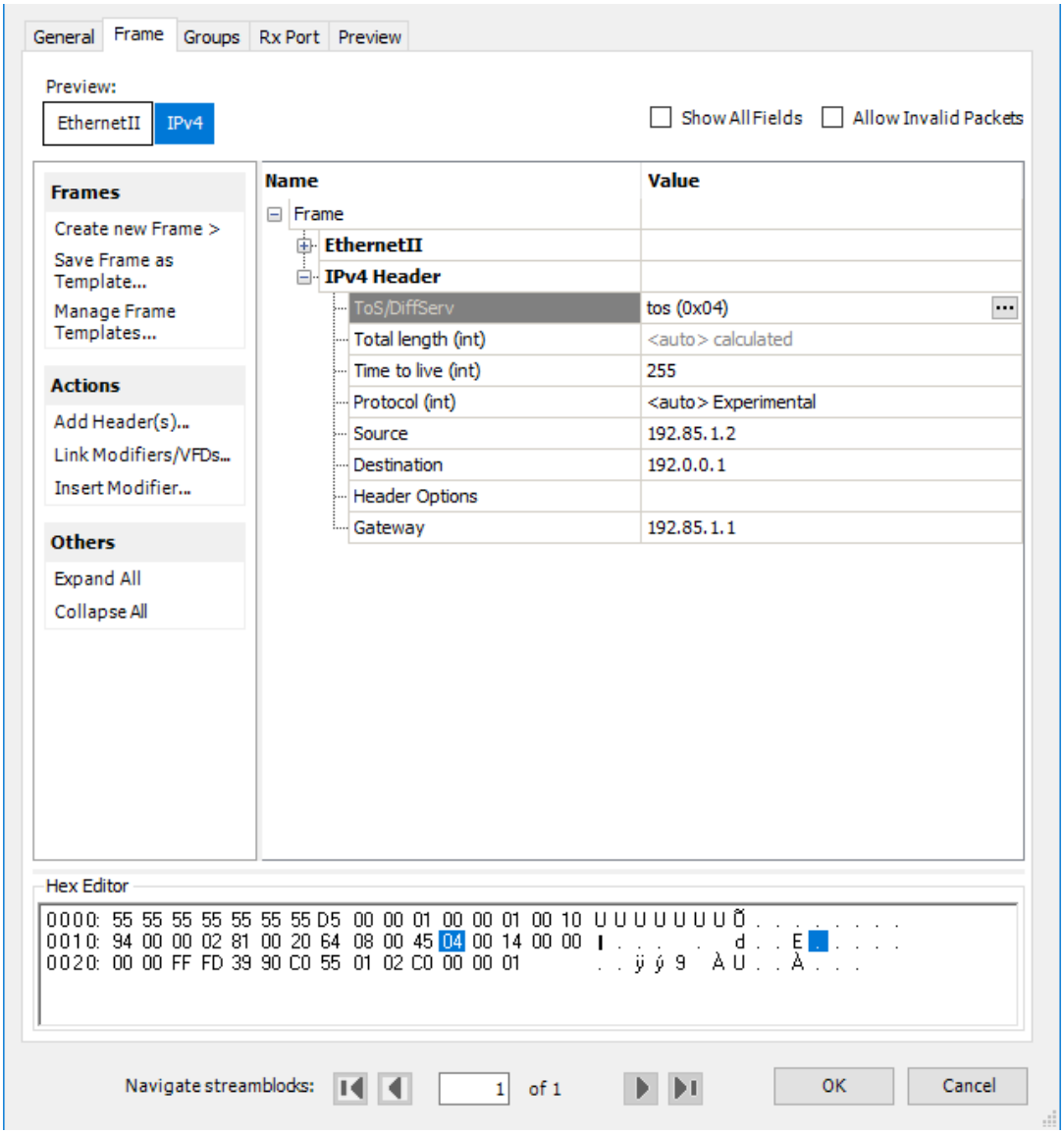

Figure 210. Setting DSCP value on TestCenter

8.7.1.4.8.3 Based on qci stream identification

The following steps describe how to use qci to identify the stream and set it to a QoS class.

1. Identify a stream.

```
tsntool> cbstreamidset --device swp1 --nullstreamid --nulldmac 0x000183fe1201 --nullvid 1 --
streamhandle 1
tsntool> qcisfiset --device swp0 --index 1 --gateid 1 --flowmeterid 68
```

2. Set to Qos class 3 by using stream gate control.

```
echo "t0 1b 3 50000 200" > sgi.txt
tsntool> qcisgiset --device swp0 --enable --index 1 --initgate 1 --initipv 0 --
gatelistfile sgi.txt
```

8.8 General networking performance considerations

The following factors should be regarded when configuring the system for high-performance scenarios, such as RFC2544 benchmarking tests.

- **The CONFIG_NR_CPUS kernel option**

  A value too high can lead to too many allocated resources that in turn can strain the system. Setting this option to 16 is recommended. This is the maximum number of cores on NXP ARM64 platforms, and the default value in the LSDK defconfig.

- **The CONFIG_PREEMPT kernel option**

  The default configuration (PREEMPT=y) is intended for low-latency use cases, with a cost on throughput. If maximizing throughput is required, disabling this config by selecting "No Forced Preemption (Server)" at build is recommended.

- **Impact of IOMMU translations**

  IOMMU support has a significant impact on networking performance. For benchmarking purposes it's recommended to keep IOMMU in passthrough mode (CONFIG_IOMMU_DEFAULT_PASSTHROUGH=y, which is enabled by default in the LSDK defconfig; alternatively, set bootarg iommu.passthrough=1).

- **Other CPU-intensive kernel features**

  Unnecessary CPU-intensive kernel features should be deactivated in order to eliminate their overhead when networking performance is critical. A few recommended options to be disable are:

  — CONFIG_NETFILER

  — CONFIG_CPU_FREQ

  — CONFIG_USB_SUPPORT

  — CONFIG_MMC

  — other peripheral support that isn't required

- **The root file system size**

  Background processes consume resources and should be kept to a minimum. A stripped down root file system will prevent unnecessary processes from starting up. For a fair networking performance comparison of two kernels, the same processes should be running in the background. These can be investigated with the ps ax command.

For additional architecture-specific performance optimization guidelines, see the following sections:

- DPAA 1.x Performance considerations
- DPAA2 Performance considerations
- ENETC Performance considerations and benchmarking provisions

Chapter 9
Linux user space

9.1 Libraries

9.1.1 OpenSSL

9.1.1.1 Overview

The Secure Socket Layer (SSL) protocol is the most widely deployed application protocol to protect data during transmission by encrypting the data using popular cipher algorithms such as AES, DES and 3DES.

Apart from encryption, it also provides message authentication services using popular hash/digest algorithms, such as SHA1 and MD5. SSL is widely used in application web servers (HTTP) and other applications such as SMTP POP3, IMAP, Proxy servers etc., where protection of data in transit is essential.

There are various version of SSL protocol such as SSLv3, TLSv1.0, TLSv1.1, TLSv1.2, TLSv1.3, and DTLS (Datagram TLS). Of all the SSL protocol versions, TLSv1.0 and SSLv3 are in commonly in use, with other versions seeing more adoption as well.

This document introduces NXP SSL acceleration solution on QorIQ platforms using OpenSSL.

OpenSSL Software architecture

The OpenSSL library has several sub-components such as:

1. SSL protocol library
2. Crypto library (Symmetric and Asymmetric cipher support, digest support etc.)
3. Certificate Management

The following figure shows the general interconnect architecture for OpenSSL and the interfaces with hardware acceleration drivers:

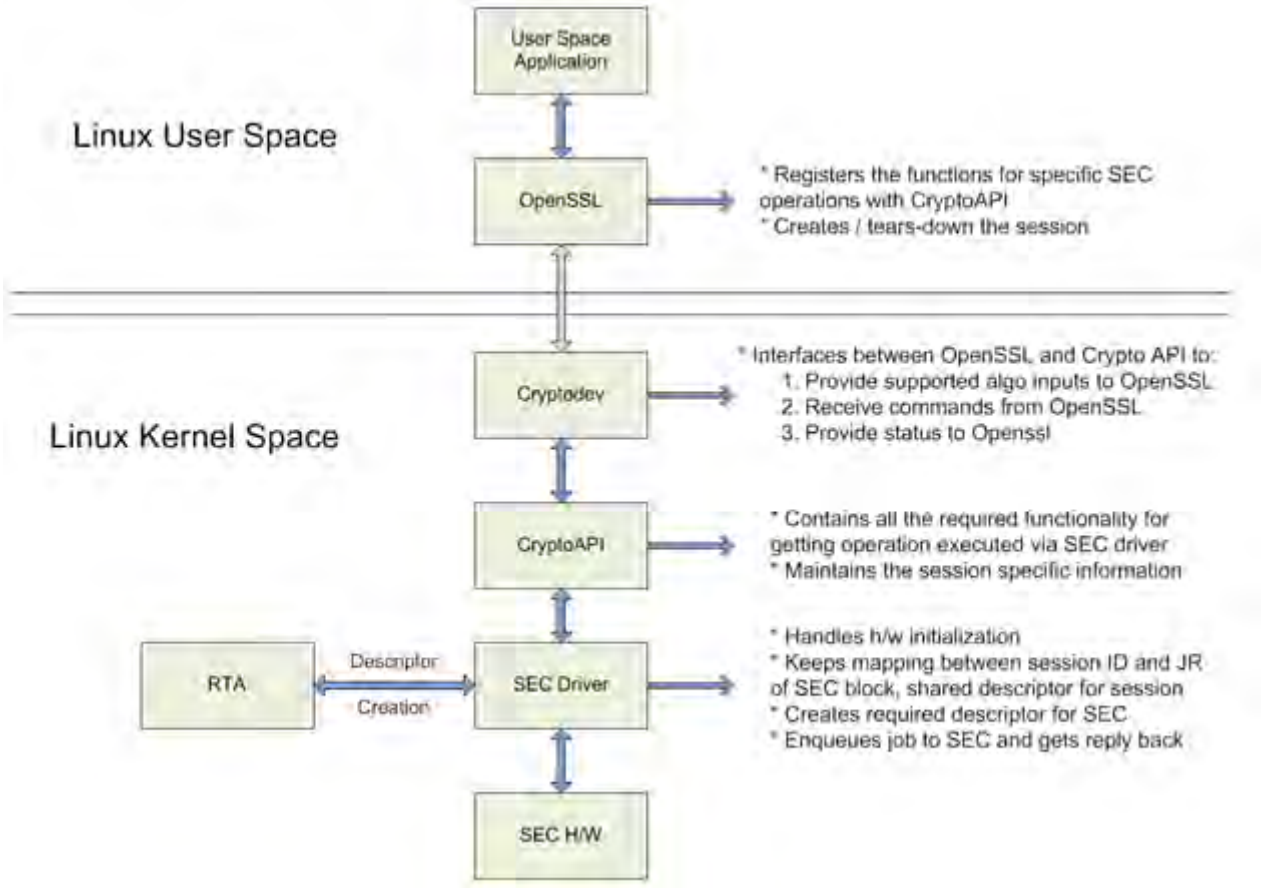

Figure 211. OpenSSL interface with Linux kernel

OpenSSL's ENGINE Interface

OpenSSL Crypto library provides Symmetric and Asymmetric (PKI) cipher support that is used in a variety of applications such as OpenSSH, OpenVPN, PGP, IKE, XML-SEC etc. The OpenSSL Crypto library provides software support for:

1. Cipher algorithms
2. Digest algorithms
3. Random number generation
4. Public Key Infrastructure

Apart from the software support, OpenSSL can offload these functions to hardware accelerators via the ENGINE interface. The ENGINE interface provides callback hooks that integrate hardware accelerators with the crypto library. The callback hooks provide the glue logic to interface with the hardware accelerators. Generic offloading of cipher and digests algorithms through Linux kernel is possible with cryptodev engine.

NXP solution for OpenSSL hardware offloading

The following layers can be observed in NXP's solution for OpenSSL hardware offloading:

- OpenSSL (user space) - implements the SSL protocol
- cryptodev-engine (user space) - implements the OpenSSL ENGINE interface; talks to cryptodev-linux (/dev/crypto) via ioctls, offloading cryptographic operations in kernel

- cryptodev-linux (kernel space) - Linux module that translates ioctl requests from cryptodev-engine into calls to Linux Crypto API
- Linux Crypto API (kernel space) - Linux kernel crypto abstraction layer
- CAAM driver (kernel space) - Linux device driver for the CAAM (Cryptographic Acceleration and Assurance Module) crypto engine

The following can be offloaded in hardware in current SDK (not a complete list):

- SSL: TLS v1.1 & TLS v1.2 with one-shot cipher modes (a single ioctl for both encryption and authentication):
  - AES128-SHA1
  - AES256-SHA1
  - AES128-SHA256
  - AES256-SHA256

NOTE

- Only supported on kernel version 4.19.
- Not supported on kernel version 5.4
- One shot cipher AES128-SHA1 and AES256-SHA1 for TLS1.0 is not any more supported.

9.1.1.2 Manual Build of OpenSSL with Cryptodev Engine Support

This chapter is optional since the root filesystem can be configured to include both OpenSSL and cryptodev automatically.

```
$ cd flexbuild
$ source setup.env

Build cryptodev-linux:
$ flex-builder -c cryptodev_linux -a arm64   # automatically setup cross-toolchain and fetch
cryptodev-linux repository to build

Build OpenSSL:
$ flex-builder -c openssl -a arm64

Merge OpenSSL and cryptodev-linux components into target rootfs:
$ flex-builder -i merge-component -a arm64

Generate bootpartition tarball:
$ flex-builder -i mkbootpartition -a arm64
```

Follow flexbuild documentation to finalize the building of the root filesystem and kernel on the host system.

Manual build

Manual build or rebuild may be necessary for a number of reasons. This section describes how to build and install OpenSSL natively on the target system. Cross-build procedure requires appropriate toolchains and is not described.

Both OpenSSL and cryptodev must be installed since they depend on each other:

```
$ git clone https://source.codeaurora.org/external/qoriq/qoriq-components/openssl
$ git clone https://source.codeaurora.org/external/qoriq/qoriq-components/cryptodev-linux
```

Build cryptodev and optionally run self tests:

```
$ cd cryptodev-linux
$ make
$ sudo make install
```

```
$ sudo modprobe cryptodev
$ make check
```

Build openssl with cryptodev support:

```
$ cd openssl
$ $ ./Configure enable-devcryptoeng -I./include --prefix=/usr/local --openssldir=lib/ssl linux-
aarch64 shared
$ make
$ sudo make install
```

After installation verify that the binary is linking with the correct share library from /usr/local/lib:

```
$ ldd /usr/local/bin/openssl
```

If the binary is linking with the original library from /usr/lib then it may be necessary to adjust the linker paths. Put /usr/local/lib in a line before /usr/lib inside /etc/ld.so.conf and then update the linker cache:

File: /etc/ld.so.conf

```
...
/usr/local/lib
...
/usr/lib
...
```

```
$ sudo ldconfig
$ ldd /usr/local/bin/openssl
```

Now check the version of OpenSSL

```
$ openssl version
OpenSSL 1.1.1d  10 Sep 2019
```

9.1.1.3 Hardware Offloading with OpenSSL

Overview

OpenSSL can delegate execution of crypto operations to a variety of hardware devices through the engine interface. On top of this interface is implemented the engine cryptodev which is used to offload crypto operations to hardware devices under the control of the operating system kernel. Cryptodev engine was originally developed for OpenBSD and later the same API was ported to GNU/Linux operating system by several drivers like OCF and cryptodev-linux.

Cryptodev-linux is a Linux kernel driver that exposes the internal crypto API to user-space via the device file /dev/crypto. User-space applications use ioctl system calls to ask the Linux kernel to perform crypto operations on their behalf. The Linux kernel supports a multitude of crypto algorithms with software implementations running on CPU. Drivers for hardware accelerators are installed with higher priority and override software implementations with no further configuration.

From the point of view of any application, the fastest implementation of an algorithm is used transparently. This behavior is transferred also to cryptodev interface which is oblivious to the fact that an algorithm may run on CPU or on a hardware accelerator.

For this reason, it is the job of the operator of the application to ensure that hardware kernel drivers are available before running the application.

This translates simply to running modprobe if the NXP SEC driver is not built-in the kernel. In our case:

```
# modprobe caamalg
# modprobe caamhash
# modprobe caam_pkc
```

NXP platforms have several SEC frontends exposed with different device drivers: JRI (job ring), QI (queue interface), DPSECI. See platform and SEC guide for available Linux kernel drivers. Usually, at least the JR driver should be available for any platform

For QI frontend the symmetric cyphers have a kernel module called caamalg_qi. This driver installs algorithms with lower priority than caamalg so they are shadowed by the later. To use the QI frontend, load this driver instead of caamalg:

```
# modprobe caamalg_qi
```

DPSECI frontend has yet another driver caamalg_qi2 which currently is always built-in the kernel.

Verify setup

There are a few simple steps to confirm if crypto hardware drivers are available. Running these steps contribute to a smooth experience and easier debugging if things go wrong.

Linux kernel can check and report ciphers availability with the help of tcrypt module. After probing tcrypt, crypto algorithms will be listed in /proc/crypto. Tcrypt module is not always available in default kernels but it is a simple way to run tests and list all available crypto algorithms:

```
$ modprobe tcrypt
$ grep aes /proc/crypto
<...>
```

Load CAAM device drivers if they are not built-in and check their interrupt count:

```
# modprobe caamalg (or caamalg_qi)
# modprobe caamhash
# modprobe caam_pkc
<...>
# grep tls /proc/crypto
name         : tls11(hmac(sha1),cbc(aes))
driver       : tls11-hmac-sha1-cbc-aes-caam-qi

<...>
```

Hardware operations can be monitored with the interrupt counters for CAAM JR and QI (DPAA and DPAA2) interfaces:

```
# cat /proc/interrupts | grep jr
 88: 0 0 0 0 26 0 0 0   OpenPIC    88 Level     ffe301000.jr
 89: 0 0 0 0 0 1117204 0 0   OpenPIC    89 Level     ffe302000.jr
 90: 0 0 0 0 0 0 24 0   OpenPIC    90 Level     ffe303000.jr
 91: 0 0 0 0 0 0 0 24   OpenPIC    91 Level     ffe304000.jr
```

```
# cat /proc/interrupts | grep -i qman
108: 0 0 0 0 0 0 0 7508   OpenPIC   108 Level     QMan portal 7
110: 0 0 0 0 0 0 7524 0   OpenPIC   110 Level     QMan portal 6
112: 0 0 0 0 0 7542 0 0   OpenPIC   112 Level     QMan portal 5
114: 0 0 0 0 7565 0 0 0   OpenPIC   114 Level     QMan portal 4
116: 0 0 0 7576 0 0 0 0   OpenPIC   116 Level     QMan portal 3
118: 0 0 7524 0 0 0 0 0   OpenPIC   118 Level     QMan portal 2
```

```
120: 0 7535 0 0 0 0 0 0   OpenPIC   120 Level     QMan portal 1
122: 7521 0 0 0 0 0 0 0   OpenPIC   122 Level     QMan portal 0
470: 0 0 0 0 0 0 0 0      OpenPIC   2006 Edge      qman-err
```

```
# cat /proc/interrupts | grep DPIO
<...>
```

The interrupt counters may also be incremented during networking operations unrelated to crypto. Further analysis is required to understand the source of their modification.

Load cryptodev driver and check if OpenSSL communicates with it. If cryptodev driver is not loaded, openssl will report only dynamic engine support and all operations will be done in software by OpenSSL itself.

```
# openssl engine
(dynamic) Dynamic engine loading support

# modprobe cryptodev
# ls /dev/crypto
<...>
# openssl engine
(cryptodev) BSD cryptodev engine
(dynamic) Dynamic engine loading support
```

Offloading Symmetric and Public Key Algorithms

NOTE

One shot cipher AES128-SHA1 and AES256-SHA1 for TLS1.0 is not offloaded to CAAM.

With cryptodev and SEC drivers loaded there is no other configuration necessary for OpenSSL to run crypto operations through hardware accelerator. OpenSSL will automatically use cryptodev engine if available. Some applications that link with OpenSSL like OpenSSH will automatically use the available accelerator. Others, like nginx web server may need explicit activation in their configuration file.

```
# modprobe cryptodev
# openssl speed -evp AES128-SHA -elapsed
<...>
<...>
```

TLS 1.1 and TLS 1.2 Offloading in Nginx Server

Nginx does not use any openssl engines by default. If an engine is to be used, including cryptodev, it must be explicitely listed in nginx configuration file. Here is a fragment of nginx configuration file that activates cryptodev and allows hardware offloading of TLS 1.1 and TLS 1.2 record layer protocol:

`/etc/nginx/nginx.conf`:

```
ssl_engine cryptodev;
worker_processes 4;
worker_cpu_affinity 0001 0010 0100 1000; #for 4 Core CPU; For 2 Core CPU worker_cpu_affinity 01 10;
...
    # HTTPS server
    #
    server {
        listen       443;
        server_name  localhost;

        ssl                  on;
        ssl_certificate      server.crt;
```

```
        ssl_certificate_key  server.key;
        ssl_session_timeout  5m;
        ssl_protocols  TLSv1.1;
        ssl_ciphers AES128-SHA:AES256-SHA;
        ssl_prefer_server_ciphers   on;

        location / {
            root   /var/www/localhost/html;
            index  index.html index.htm;
        }
    }
...
```

Worker processes and affinity should be set according to the number of CPU cores available on the platform. Refer to nginx documentation for more details.

TLS 1.1 and TLS 1.2 Record Layer Testing

On NXP platforms, TLS record layer is the only functionality offloaded to hardware(CAAM) engine.

First create the RSA public and private keys to be used by the server (**Note**: this operation is not offloaded on CAAM):

```
$ openssl req -x509 -newkey rsa:2048 -keyout key.pem -out cert.pem -days 365 -nodes
```

Start https webserver:

```
# modprobe cryptodev
$ openssl s_server -key key.pem -cert cert.pem -accept 44330 -www -cipher AES128-SHA -tls1_1
```

And connect to it with the client from another console:

```
$ openssl s_client -connect localhost:44330
(or)
$ echo "GET /" | openssl s_client -connect localhost:44330 -quiet
```

Just like with other tests, hardware offloading can be verified by listing the interrupt counters of the SEC driver.

9.1.1.4 TLS Ciphersuites and TLS Protocol Versions

Please refer to the official RFC documents, Transport Layer Security (TLS) Parameters, for an up-to-date list of the supported algorithms.

Table 181. Compatibility for OpenSSL CipherSuite Off-loaded to NXP CAAM

CipherSuite	TLS Protocol Version
AES_128_CBC_SHA1	TLS1.1
AES_256_CBC_SHA1	TLS1.1
AES_128_CBC_SHA256	TLS1.2
AES_256_CBC_SHA256	TLS1.2

NOTE

All other ciphers that are suppored by current OpenSSL release are done in software using standard AMR-CE.

9.1.2 Runtime Assembler Library Reference

Use the Runtime Assembler Library to write SEC descriptors.

9.1.2.1 Runtime Assembler Library Reference

Use the Runtime Assembler Library to write SEC descriptors. This reference describes the structure, concept, functionality, and high level API.

Click here to access the Writing descriptors for NXP CAAM using RTA library PDF.

9.2 Data Plane Development Kit (DPDK)

9.2.1 Introduction

DPDK is an user space packet processing framework.

This guide contains instructions for installing and configuring the user space Data Plane Development Kit (DPDK) v18.11 software. Besides highlighting the applicable platforms, this guide describes steps for compiling and executing sample DPDK applications in a Linux application (*linuxapp*) environment over Layerscape boards.

OVS-DPDK is a popular software switching package which uses DPDK as the underlying platform. The guide also detail methods to execute *ovs-dpdk* in conjuction with DPDK over Layerscape boards.

9.2.1.1 Supported platforms and platform-specific details

DPDK supports LS1012A, LS1028A, LS1043A, LS1046A, LS1088A, LS2088A, and LX2160 family of SoCs. This section details the architectural and port layout of their Reference Design Boards. Port layout information is especially relevant while executing DPDK applications - to map DPDK port number to physical ports..

Refer to the following for board specific information:

9.2.1.1.1 LS1012A Reference Design Board (RDB)

LS1012A is a PPFE-based platform. For more information on LS1012ARDB, see www.nxp.com/LS1012ARDB

Hardware Specification of LS1012ARDB

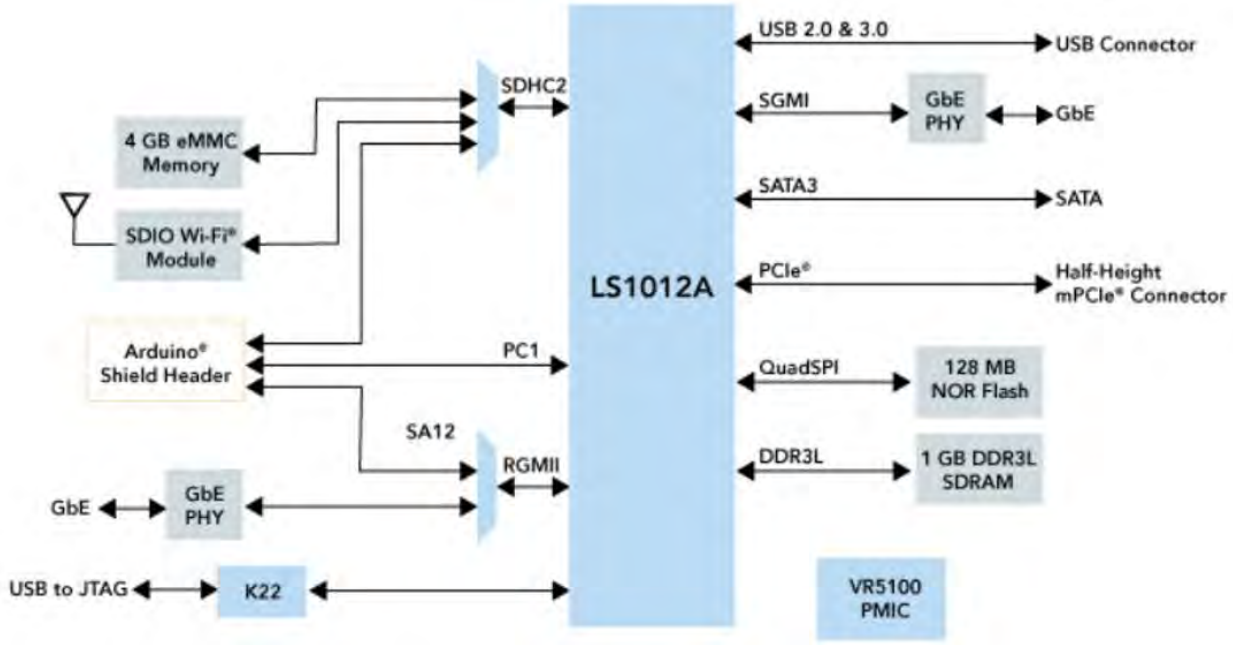

Figure 212. QorIQ LS1012A Reference Design

LS1012ARDB Port Layout

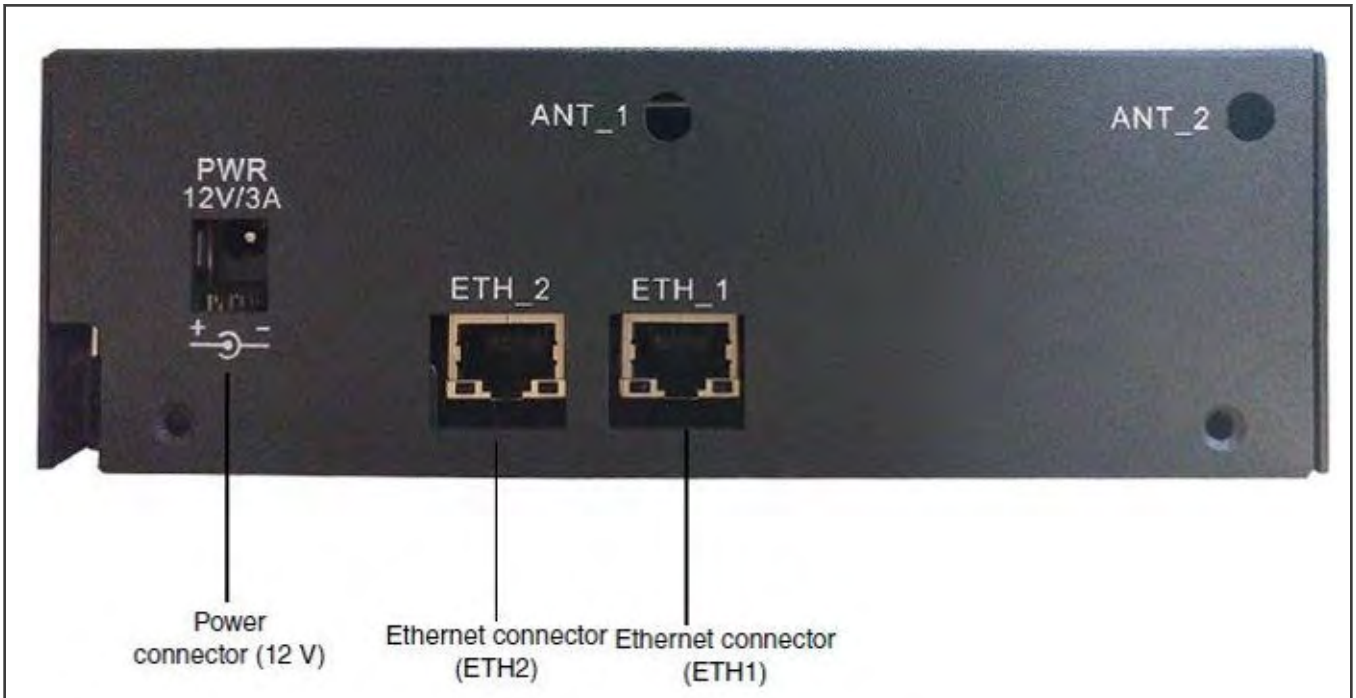

Figure 213. LS1012A Port Layout

Label on Case	DPDK vdev Port Names
ETH1	eth_pfe0

Table continues on the next page...

Table continued from the previous page...

ETH2	eth_pfe1

9.2.1.1.2 LS1028A Reference Design Board (RDB)

The Layerscape LS1028A industrial applications processor includes a TSN-enabled Ethernet switch and Ethernet controllers to support converged IT and OT networks. For more information on LS1028ARDB, http://www.nxp.com/LS1028ARDB.

Hardware specification

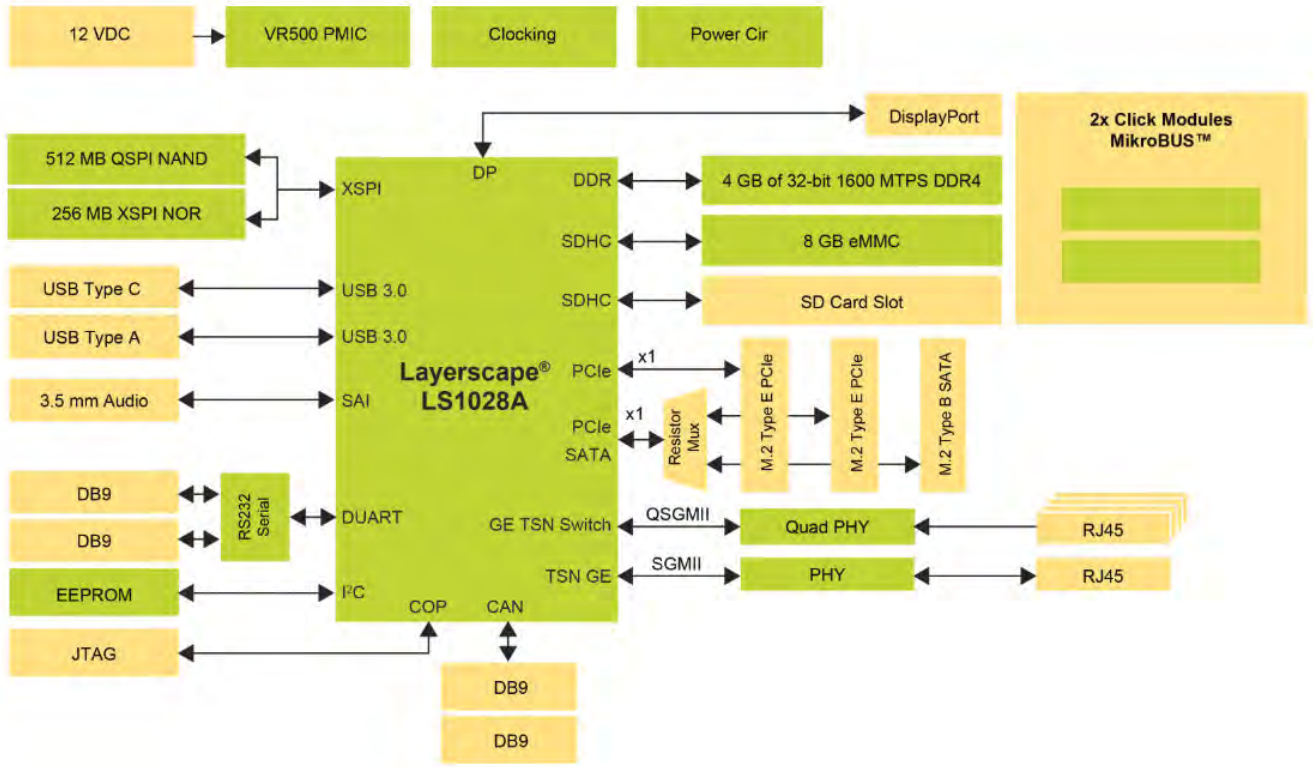

Figure 214. Layerscape LS1028A architecture

Figure 215. LS1028ARDB port layout

Label on Case	PCI address of interface

Table continues on the next page...

Table continued from the previous page...

1G MAC0	0000:00:00.0
1G SWP0	NA
1G SWP1	NA
1G SWP2	NA
1G SWP3	NA

9.2.1.1.3 LS1043A Reference Design Board (RDB)

LS1043A is a DPAA-based platform. For more information on LS1043ARDB, see www.nxp.com/LS1043ARDB

Hardware Specification of LS1043ARDB

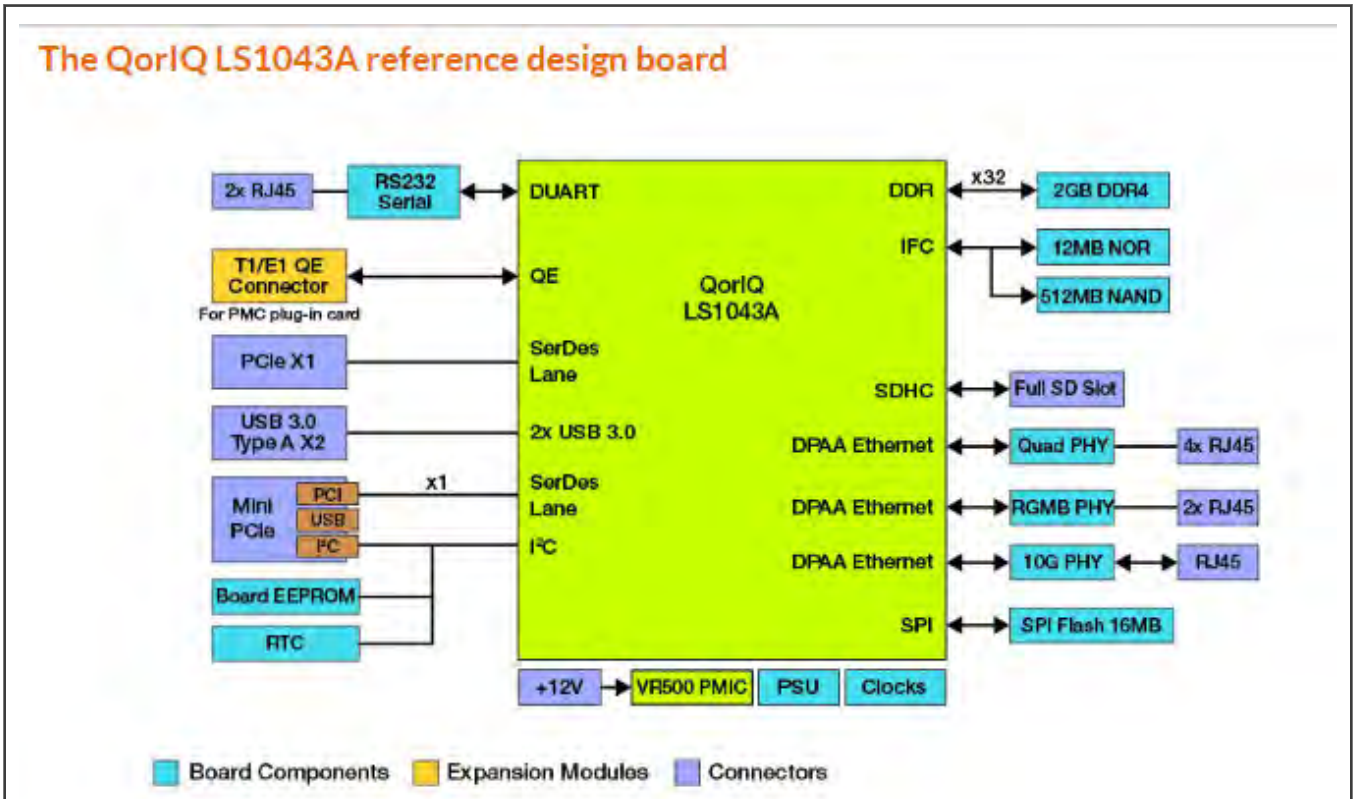

Figure 216. QorIQ LS1043A Reference Design

LS1043ARDB Port Layout

Figure 217. LS1043A Port Layout

Label on Case	FMAN Port Names	Userspace Ports	Comment
QSGMII.P0	FM0-MAC1	0	1G Port
QSGMII.P1	FM0-MAC2	1	1G Port
RGMII1	FM0-MAC3	2	1G Port
RGMII2	FM0-MAC4	3	1G Port
QSGMII.P2	FM0-MAC5	4	1G Port
QSGMII.P3	FM0-MAC6	5	1G Port
10G	FM0-MAC9	6	10G - Copper Port

NOTE

Information provided in the "Userspace Ports" column above is conditional to default Device tree (DTB) provided as part of Board Support Package. The ordering can change for a custom DTB.

9.2.1.1.4 LS1046A Reference Design Board (RDB) / LS1046A Freeway Board (FRWY)

LS1046A is a DPAA based platform. For more information on LS1046ARDB, see www.nxp.com/LS1046ARDB and for LS1046A Freeway, see www.nxp.com/FRWY-LS1046A.

Hardware specification of LS1046ARDB

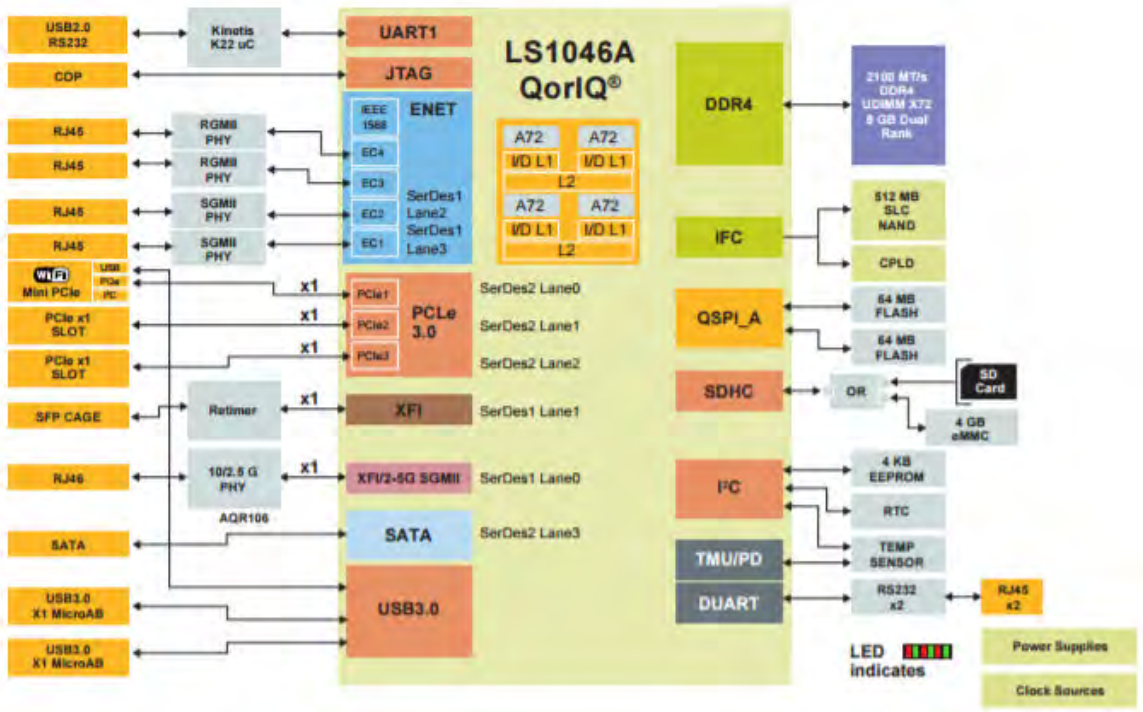

Figure 218. QorIQ LS1046A reference design

LS1046ARDB port layout

Figure 219. LS1046ARDB port layout

Label on sase	FMAN port names	Userspace ports	Comment
RGMII1	FM0-MAC3	0	1G Port
RGMII2	FM0-MAC4	1	1G Port
SGMII1	FM0-MAC5	2	1G Port
SGMII2	FM0-MAC6	3	1G Port
10G-Copper	FM0-MAC9	4	10G – Copper Port
10G-SFP+	FM0-MAC10	5	10G – SFP+ Optical Port

NOTE

Information provided in the "Userspace Ports" column above is conditional to default Device tree (DTB) provided as part of LSDK. The ordering can change for a custom DTB.

FRWY-LS1046A port layout

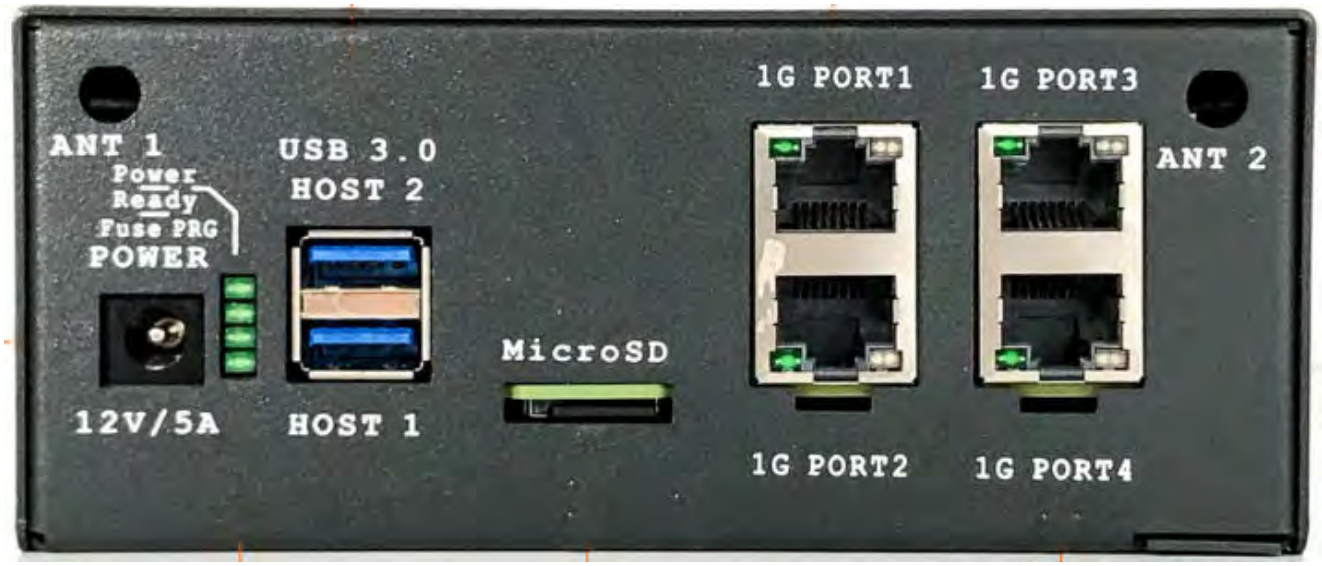

Figure 220. FRWY-LS1046A port layout

Label on case	FMAN port names	Userspace ports	Comment
1G PORT1	FM0-MAC1	0	1G Port
1G PORT2	FM0-MAC5	1	1G Port
1G PORT3	FM0-MAC6	2	1G Port
1G PORT4	FM0-MAC10	3	1G Port

9.2.1.1.5 LS1088A Reference Design Board (RDB)

LS1088A is a DPAA2 based platform. For more information on QorIQ LS1088A, see www.nxp.com/LS1088ARDB.

Hardware Specifications of LS1088ARDB

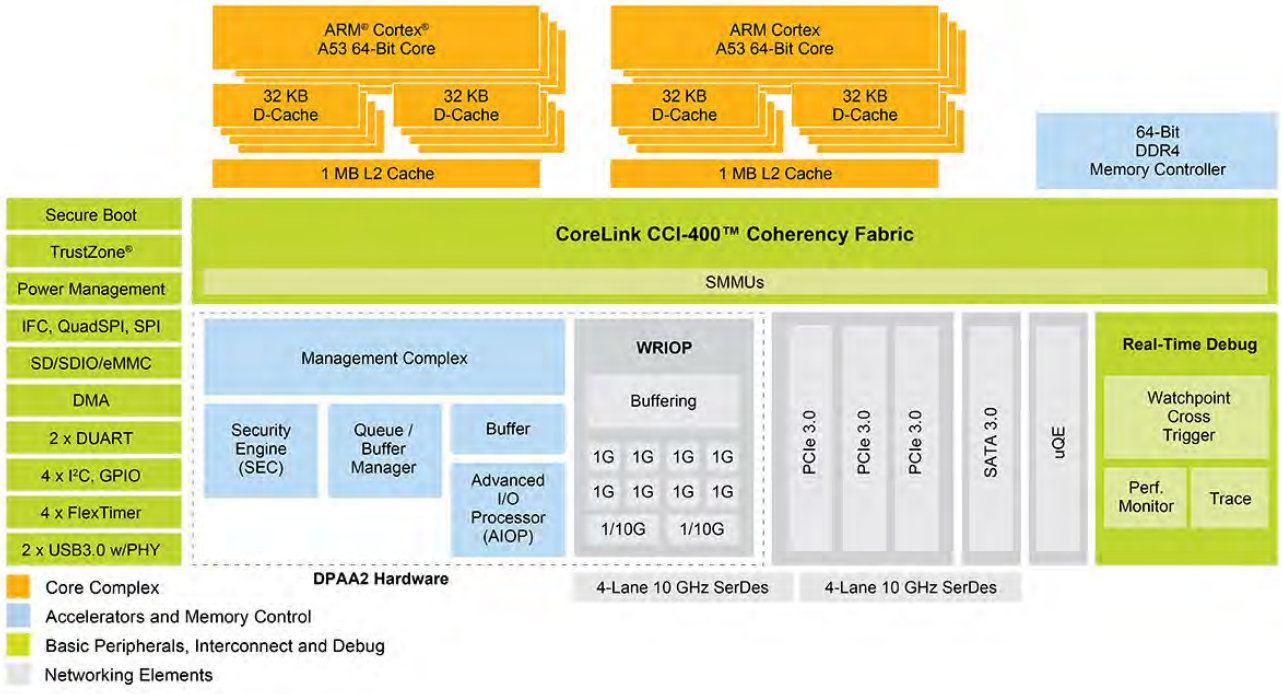

Figure 221. QorIQ LS1088A Architecture

LS1088ARDB Port Layout

Figure 222. LS1088ARDB Port Layout

Label on Case	Physical Ports	Comment
ETH0	DPMAC.1	10G - Copper port
ETH1	DPMAC.2	10G – SFP+ (Optical port)
ETH2	DPMAC.7	QSGMII port (1G)
ETH3	DPMAC.8	QSGMII port (1G)
ETH4	DPMAC.9	QSGMII port (1G)
ETH5	DPMAC.10	QSGMII port (1G)
ETH6	DPMAC.3	QSGMII port (1G)
ETH7	DPMAC.4	QSGMII port (1G)
ETH8	DPMAC.5	QSGMII port (1G)
ETH9	DPMAC.6	QSGMII port (1G)

9.2.1.1.6 LS2088A Reference Design Board (RDB)

LS2088A is a DPAA2 based platform. For more information on QorIQ LS2088A, see www.nxp.com/LS2088ARDB.

Hardware specifications

LS2088A Reference Design Board

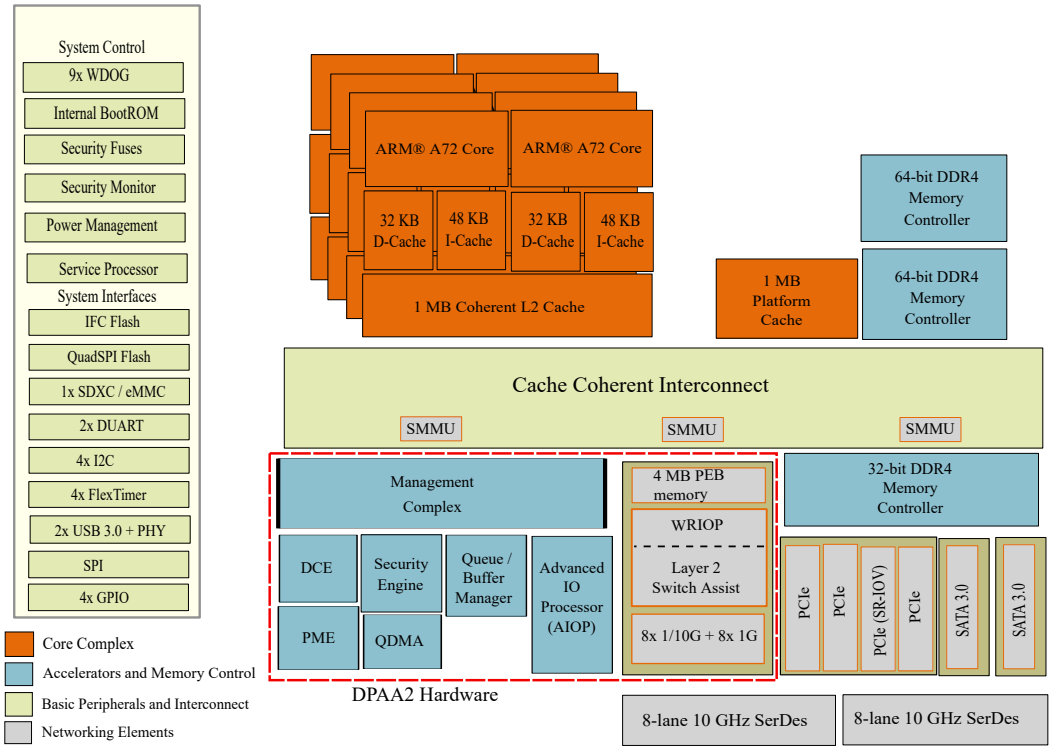

Figure 223. QorIQ LS2088A Architecture

LS2088ARDB Port Layout

Figure 224. LS2088ARDB Port Layout

Label on Case	Physical Ports	Comment
ETH0	DPMAC.5	10G - Copper port
ETH1	DPMAC.6	10G - Copper port
ETH2	DPMAC.7	10G - Copper port
ETH3	DPMAC.8	10G - Copper port
ETH4	DPMAC.1	10G – SFP+ (Optical port)

Table continues on the next page...

Table continued from the previous page...

ETH5	DPMAC.2	10G – SFP+ (Optical port)
ETH6	DPMAC.3	10G – SFP+ (Optical port)
ETH7	DPMAC.4	10G – SFP+ (Optical port)

9.2.1.1.7 LX2160A Reference Design Board (RDB)

LX2160A is a DPAA2 based platform. For more information on QorIQ LX2160, see www.nxp.com/LX2160A.

Hardware specifications

LX2160A Reference Design Board

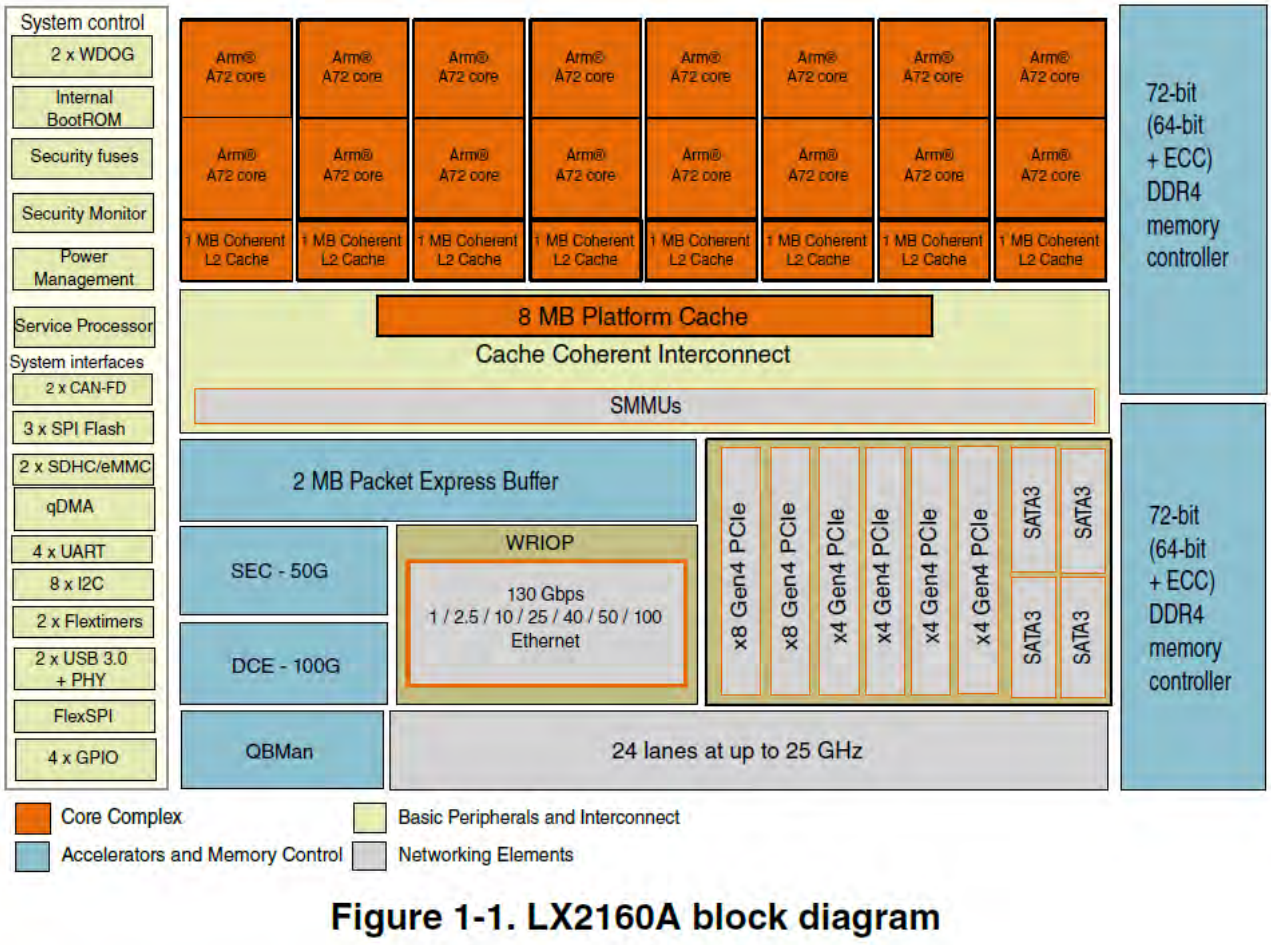

Figure 1-1. LX2160A block diagram

Figure 225. QorIQ LX2160A Architecture

LX2160ARDB Port Layout

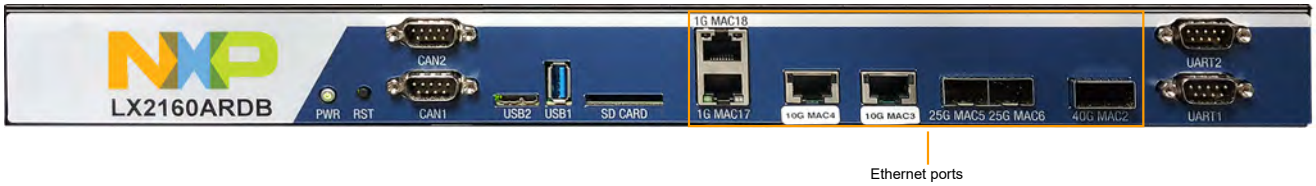

Figure 226. LX2160ARDB Port Layout

Table 182. Port Layout

Label on Case	Physical Ports	Comment
40G MAC2 (*)	dpmac.2	40G - Fiber port
10G MAC3	dpmac.3	10G - Copper port
10G MAC4	dpmac.4	10G - Copper port
25G MAC5	dpmac.5	25G - Fiber port
25G MAC6	dpmac.6	25G - Fiber port
10G MAC7 (*)	dpmac.7	10G - Fiber port
10G MAC8 (*)	dpmac.8	10G - Fiber port
10G MAC9 (*)	dpmac.9	10G - Fiber port
10G MAC10 (*)	dpmac.10	10G - Fiber port
1G MAC17	dpmac.17	1G - Copper port
1G MAC18	dpmac.18	1G - Copper port

NOTE

(*) Only one configuration between 40G or 4x10G would be available - thus depending on SERDES configuration, only one of {*dpmac.2*} port or {*dpmac.7, dpmac.8, dpmac.9, dpmac.10*} would be available. 4x10G is available by using port-splitter on the 40G port (*dpmac.2*). For 4x10G configuration, use SERDES Protocol 18.

SERDES Configuration

Following table shows the SERDES protocol configuration application for LX2160A boards. Based on the configuration of the protocol, either 4x10G ports, or 1x40G port is configured/visible. Detailed configurations and protocol information is available in LSDK Quick Start Guide for LX2160ARDB

18	USXGMII / XFI.3	USXGMII / XFI.4	25GE.5	25GE.6	USXGMII / XFI.7	USXGMII / XFI.8	USXGMII / XFI.9	USXGMII / XFI.10	SSFFSSSS
19	USXGMII / XFI.3	USXGMII / XFI.4	25GE.5	25GE.6	40GE.2				SSFFSSSS

9.2.1.2 References

Table 183. DPDK Application References

Sample Applications	DPDK Web Manual Link	Description

Table continues on the next page...

Table 183. DPDK Application References (continued)

Layer-2 Forwarding (`l2fwd`)	l2fwd usage	Layer 2 Forwarding sample application setup and usage guide.
Layer-2 Forwarding with Crypto (`l2fwd-crypto`)	l2fwd-crypto	Layer 2 Forwarding with Crypto sample application setup and usage guide.
Layer-3 Forwarding (`l3fwd`)	l3fwd usage	Layer 3 Forwarding sample application setup and usage guide.
IPSec Gateway (`ipsec-secgw`)	ipsec-secgw usage	IPSec Security Gateway sample application setup and usage guide.
PMD Test Application (`testpmd`)	testpmd usage	Guide for test application which can be used to test all PMD supported features.
DPDK Web Guide	DPDK Documentation	Link to DPDK Web Manual containing information about all supported PMD and Applications.

Table 184. Release References

Component	Base Upstream Release Versions
DPDK	19.11.0
OVS	2.13.0
PKTGEN	19.12.0

9.2.2 DPDK Overview

Key goal of the DPDK is to provide a simple, complete framework for fast packet processing in data plane applications. Using the APIs provided as part of the framework, applications can leverage the capabilities of underlying network infrastructure.

The framework creates a set of libraries for target environments, layered through an Environment Abstraction Layer (EAL) which hides all the device glue logic beneath a set of consistent APIs. These environments are created through the use of configuration files. Once the EAL library is created, the user may link with the library to create their own applications. Various other libraries, outside of EAL, including the Hash, Longest Prefix Match (LPM) and rings libraries are also available for performing specific operations. Sample applications are also provided to help understand various features and uses of DPDK framework.

DPDK implements a run-to-completion model for packet processing where all resources must be allocated prior to calling data plane applications, running as execution units on logical processing cores. In addition, a pipeline model may also be used by passing packets or messages between cores via rings. This allows work to be performed in stages, resulting in more efficient use of code on cores.

More information on general working of DPDK can be found through DPDK website.

9.2.2.1 DPDK Platform Support

This section describes the NXP Data Path Acceleration Architecture, see the diagram below:

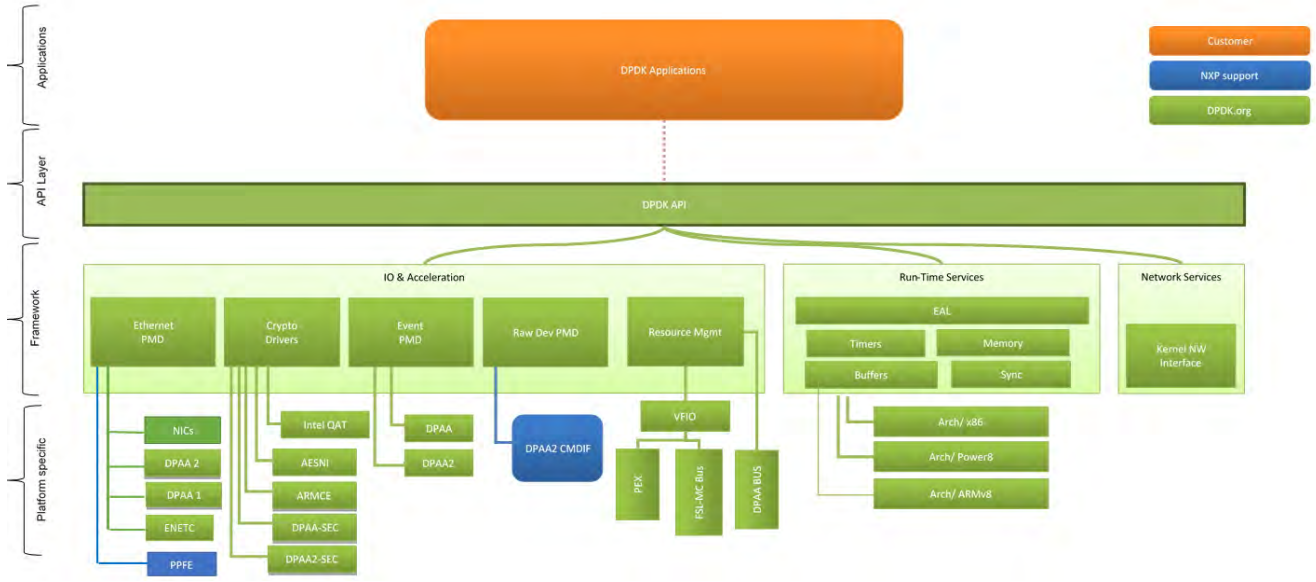

Figure 227. DPDK Architecture with NXP Components

The NXP Data Path Acceleration Architecture comprises a set of hardware components which are integrated via a hardware queue manager and use a common hardware buffer manager. Software accesses the DPAA via hardware components called *"Software Portals"*. These directly provide queue and buffer manager operations such as enqueues, dequeues, buffer allocations, and buffer releases and indirectly provide access to all of the other DPAA hardware components via the queue manager.

NXP DPAA architecture based *PMD (Poll Mode Drivers)* has been added to DPDK infrastructure to support seamless working on NXP platform. With the addition of these drivers, DPDK framework on NXP platforms permits Linux user space applications to be build using standard DPDK APIs in a portable fashion. The drivers directly access the DPAA queue and buffer manager software portals in a high performance manner and the internal details remains hidden from higher level DPDK framework. Besides drivers for network interfaces, drivers (PMDs) for interfacing with Crypto (CAAM) block have also been included in the DPDK source code.

NOTE

Since this guide contains support for PPFE, DPAA2, ENETC and DPAA platforms, the following markers are used throughout the guide:

- DPAA2 – This marker marks the steps/text applicable only for DPAA2 platforms, for example, LS2088
- DPAA – This marker marks the steps/text applicable only for DPAA platforms, for example, LS1043
- PPFE - This marker marks the steps/text applicable only for PPFE platforms, for example, LS1012
- ENETC - This marker marks the steps/text applicable only for ENETC platforms, for example, LS1028

All other steps which don't have any marker are applicable for both the platforms.

NOTE

See DPDK Performance Reproducibility Guide to tune the system for best DPDK performance on NXP platforms.

NOTE

Multi-thread environment

DPDK was originally designed for Intel architectures, however efforts are underway to make it multiple architecture friendly. There are still some restrictions which should be taken care when used on NXP platforms.

1. Multiple pthreads

   DPDK usually pins one pthread per core to avoid the overhead of task switching. This allows for significant performance gains, but lacks flexibility and is not always efficient. DPDK is comprised of several libraries - some of the functions in these libraries can be safely called from multiple threads simultaneously, while others cannot.

   The run-time environment of the DPDK is typically a single thread per logical core. It is best to avoid sharing data structures between threads and/or processes where possible. Where this is not possible, the execution blocks must access the data in a thread-safe manner. Mechanisms such as atomic variables or locking can be used to allow execution blocks to operate serially. However, this can effect the performance of the application.

2. Fast-path APIs

   Applications operating in the data plane are performance sensitive but certain functions within those libraries may not be safe to call from multiple threads simultaneously.

   The Hash, LPM, Mempool libraries and RX/TX in the PMD are examples of such multi-thread unsafe functions. The RX/TX of the *PMD* are the most critical aspects of a DPDK application and it is recommended that no locking be used with these paths as it will impact performance. However, these functions can be safely used from multiple threads when each thread is performing I/O on a different NIC queue. If multiple threads are to use the same hardware queue on the same NIC port, then locking or some other form of mutual exclusion is necessary. In the NXP implementation, each thread has to use a software portal (DPIO) instance to access the underlying DPAA hardware. Thus, it is recommended that only one thread per logical core should be created for RX/TX and other I/O access to DPAA hardware.

9.2.2.2 DPAA: Supported DPDK Features

Following is the list of DPDK NIC features which DPAA driver support:

- Allmulticast mode
- Basic stats
- Extended stats
- Flow control
- Firmware Version information
- Jumbo frame
- L3 checksum offload
- L4 checksum offload
- Link status
- MTU update
- Promiscuous mode
- Queue start/stop
- Speed Capabilities
- Scattered RX
- Unicast MAC filter

- RSS Hash
- Packet type parsing
- ARMv8

9.2.2.3 DPAA2: Supported DPDK Features

Following is the list of DPDK NIC features which DPAA2 driver support:

- Allmulticast mode
- Basic stats
- Firmware Version information
- Flow control
- Jumbo frame
- L3 checksum offload
- L4 checksum offload
- Link Status
- Link Status Events
- MTU update
- Packet type parsing
- Promiscuous mode
- Queue start/stop
- RSS hash
- Unicast MAC filter
- VLAN offload
- VLAN filter
- Speed capabilities
- ARMv8
- Linux VFIO
- Extended stats

9.2.2.4 PPFE supported DPDK features

Following is the list of DPDK NIC features which PPFE driver support:

- ALLmulticast mode
- Basic Stats
- MTU update
- Promiscuous mode
- Packet type parsing
- ARMv8

9.2.2.5 ENETC supported DPDK features

Following is the list of DPDK NIC features which ENETC driver supports:

- Packet type information
- Basic stats
- Promiscuous
- Multicast
- Jumbo packets
- Queue Start/Stop
- Deferred Queue Start
- CRC offload

Note:

ENETC based DPDK features are not supported with Kernel 4.14.

9.2.3 Build DPDK

This section includes three sub-sections which detail:

1. Building DPDK binaries (libraries and sample applications) using the Flexbuild build system.
2. Building DPDK binaries as standalone package, through DPDK's own build system.
3. Building Pktgen application which can be used as a software packet generator using DPDK as underlying layer.

9.2.3.1 Build DPDK using Flexbuild

DPDK is one of the application packages of the Flexbuild system. This section details method to build DPDK as a standalone package within the Flexbuild environment. It is assumed that the Flexbuild environment has already been configured before executing the commands below.

See Layerscape SDK user guide for complete details of using the Flexbuild build system.

Once the Flexbuild environment has been setup, following commands can be used to build DPDK applications and libraries. Generated files (libraries and binaries) would be available in the `<Flexbuild>/build/apps/components_LS_arm64` folder. Once the *rootfs* (root filesystem) is generated, the *components_LS_arm64* folder would be merged into it.

```
flex-builder -c openssl -a arm64         # to resolve the dependency on OpenSSL package
flex-builder -c linux -a arm64           # to resolve the dependency of KNI module
flex-builder -c dpdk -a arm64            # build dpdk application
flex-builder -c pktgen_dpdk -a arm64     # to generate dpdk pktgen application
flex-builder -i merge-component -a arm64 # merge app components into target rootfs
```

NOTE

DPDK is dependent on OpenSSL package for software crypto and OpenSSL PMD. It is necessary to build OpenSSL before DPDK in Flexbuild environment to suffice this dependency. If building DPDK on target platform, it is possible that OpenSSL libraries are already available in library path. In this case, building OpenSSL library would not be required.

See How to build LSDK with Flexbuild for packing these binaries into the target *rootfs* using the Flexbuild build system.

Layout of DPDK Binaries

Single image of DPDK binary supports DPAA, DPAA2, ENETC, and PPFE platforms. Once the DPDK package has been installed, binaries would be available `/usr/local/bin` folder in the rootfs. Flexbuild system generates a single rootfs for all NXP platforms it supports.

```
/usr/local/bin              # Contains the sample applications listed in Table 183
/usr/local/include/dpdk     # All DPDK header necessary for external application development
/usr/local/lib              # Various static DPDK libraries for external application development
```

DPDK binaries have been placed in the `/usr/local/bin` folder to take advantage of the binary search path set in the `PATH` variable. In case the `PATH` variable doesn't contain the `/usr/local/bin` by default, it can be added to it to enable BASH command completion.

At various places in this document, above binaries would be referred for representing execution as well as other information. It is assumed that execution is being done either using the `PATH` variable set, as explained above, or with absolute path to the binaries.

Besides the above folders, another set of files are also available in *rootfs* to support DPDK application execution. These files are available in the `/usr/local/dpdk` folder in the *rootfs*.

Table below depicts various DPDK artifacts which are available in the Flexbuild generated rootfs:

File/Image name related to `/usr/local/`	Description
`./lib/lib*.a`	DPAA, DPAA2, ENETC. and PPFE Static Libraries for compiling external applications.
`./include/dpdk/*.h`	DPAA, DPAA2, ENETC, and PPFE Headers for compiling external applications.

`./bin/l2fwd`
`./bin/l3fwd`
`./bin/l2fwd-crypto`
`./bin/ipsec-secgw`
`./bin/testpmd`
	DPAA, DPAA2, ENETC, and PPFE
	DPDK Example applications and PMD test application.

`./dpdk/dpaa/usdpaa_config_ls<PLAT>.xml`
`./dpdk/dpaa/usdpaa_policy_hash_ipv4_1queue.xml`
`./dpdk/dpaa/usdpaa_policy_hash_ipv4_2queue.xml`
`./dpdk/dpaa/usdpaa_policy_hash_ipv4_4queue.xml`
	DPAA Only.
	FMC Configurations and Policy files.
	`<PLAT>` is platform name for DPAA platform, for example `ls1043` or `ls1046`.
	Each Policy file for defining the number of queues per port as mentioned in its name.

`./dpdk/dpaa2/dynamic_dpl.sh` `./dpdk/dpaa2/destroy_dynamic_dpl.sh`	DPAA2 Only. Dynamic DPL container creation and teardown script.
`./share/dpdk/usertools/dpdk-setup.sh` `./share/dpdk/usertools/dpdk_devbind.py`	PPFE only DPDK NIC binding utility.

Table continues on the next page...

Table continued from the previous page...

	This is only applicable for executing DPDK applications in VM.
`./enable_performance_mode.sh` `./disable_performance_mode.sh`	When executing a Ubuntu OS over Layerscape board, performance on core 0 can become non-deterministic because of OS services and threads. These scripts allow a special setting wherein the DPDK application, which would run after running the enable script, would get real time priorities. **NOTE** These scripts should not be used in general cases. For detailed use-case, refer to Performance Reproducibility Guide section.

`./examples/ipsec_secgw/ep0.cfg`
`./examples/ipsec_secgw/ep1.cfg`
`./ipsec/ep0_64X64.cfg`
`./ipsec/ep1_64X64.cfg`
`./ipsec/ep0_64X64_proto.cfg`
`./ipsec/ep0_64X64_sha256.cfg`
`./ipsec/ep1_64X64_proto.cfg`
`./ipsec/ep1_64X64_sha256.cfg`
	Configuration files for `ipsec-gw` example application.
	The `ep0` and `ep1` files are standard configurations for 2 tunnels for encryption and decryption, each. The `ep0_64X64` and `ep1_64X64` are for 64 tunnels for encryption and decryption, each.

`/usr/bin/pktgen`	Packet generation application
`./debug_dump.sh`	Dumping the debug data for further analysis.

9.2.3.2 Build DPDK on host (Native)

This section lists the steps required to build DPDK binaries (libraries and example applications) on the host environment. This environment is host enabled for building directly on the Layerscape target board.

NOTE

This section focuses on building of DPDK on a host machine for Layerscape boards as target. Notes are added to enable the compilation of DPDK applications directly on a host machine.

Setup proxies

Depending on the environment you are working in, proxies setting might be required to have internet connectivity. Use the following proxy commands:

```
$ export http_proxy=http://<proxy-server-name>.com:<port-number>
$ export https_proxy=https://<proxy-server-name>.com:<port-number>
```

Obtain the DPDK source code

The DPDK source code contains all the libraries for building example applications as well as test applications. The source code includes configurations and scripts for supporting build and execution. Obtain the DPDK source code using the link below:

```
git clone https://source.codeaurora.org/external/qoriq/qoriq-components/dpdk -b github.qoriq-
os/integration
```

Once the above repository is cloned, DPDK source code will be available for compilation. This source is common for DPAA, DPAA2, ENETC, and PPFE platforms.

Compiling DPDK

Follow the below steps to compile DPDK. In case of direct compilation on target boards, it is assumed that prerequisites would be satisfied using the root filesystem. Execute the following command:

```
make T=arm64-dpaa-linuxapp-gcc install CONFIG_RTE_KNI_KMOD=n CONFIG_RTE_EAL_IGB_UIO=n -j 4
```

A directory named `arm64-dpaa-linuxapp-gcc` is created, binaries and libraries are also available in it.

The KNI and other kernel module compilation should be disabled as only limitation is kernel module like (KNI) native compilation is not supported due to build dependencies not met by Root File System.

NOTE

DPDK `arm64-dpaa-linuxapp-gcc` folder contains *.config* file for storing the build configuration. Another way of disabling or enabling support features, like KNI and software crypto drivers, is to edit this file before executing the `make` command. If this method is adopted, parameters to command line for disabling the feature are not required. There is one limitation that the kernel module (KNI) compilation is not supported because build dependencies at native are not satisfactory.

NOTE

If KNI or software crypto driver support is disabled using the `make` command line parameters, it would not modify the configuration file for DPDK in the `<target>` folder. Every subsequent compilation of DPDK or example application would need to include the same command line arguments to avoid failure because of missing features which were not compiled. Or, edit the *.config* folder in the `arm64-dpaa-linuxapp-gcc` build folder.

Compiling DPDK example applications

Once the DPDK source code is compiled, the DPDK example applications can be built independently as required:

1. Before the example applications can be built, the path to DPDK SDK needs to be set which includes the DPDK source code. This would be used by build system to look for compiled libraries and headers.

   ```
   export RTE_SDK=<path to DPDK source code, where compilation was done>
   ```

2. Target should be set to same value as done for compilation of DPDK.

   ```
   export RTE_TARGET=arm64-dpaa-linuxapp-gcc
   ```

3. Once the above variables are set, example applications can be compiled using the following commands:

Some applications like `testpmd` are generated as part of default build. These would be available in `<build folder>/app/` folder.

For other example applications which are part of the examples/ folder, one of following is applicable:

```
make -C examples/l3fwd             # for the L3 forwarding application
make -C examples/l2fwd             # for the L2 forwarding application
make -C examples/ip_fragmentation        # for the IP fragmentation application
make -C examples/ip_reassembly           # for the IP reassembly application
make -C examples/ipsec-secgw          # for the IPSec gateway application
```

Above are sample commands for a limited set of DPDK example applications. Other applications can be compiled using similar command pattern.

```
make -C examples/<Name of examples directory>
```

NOTE

All the example applications currently supported by DPDK are available as part of the DPDK source code in the `./examples/` folder. Other examples can also be compiled using the pattern stated above.

9.2.3.3 Standalone build of DPDK libraries and applications

This section details steps required to build DPDK binaries (libraries and example applications) in a standalone environment. This environment can either be on a host enabled for cross building for Layerscape boards or directly on the Layerscape target board.

NOTE

This section primarily focuses on standalone building of DPDK on a host machine using cross compilation for Layerscape boards as target. Though, necessary notes have been added to enable compilation directly on target boards. Refer How to build LSDK with Flexbuild for creating an environment suitable for building DPDK on Layerscape boards.

For steps detailing building DPDK using Flexbuild system, refer How to build LSDK with Flexbuild and Build DPDK using Flexbuild.

Obtain the DPDK source code

The DPDK source code contains all the necessary libraries for build example applications as well as test applications. The source code also includes various configuration and scripts for supporting build and execution. Obtain the DPDK source code using the link below:

- ```
  git clone https://source.codeaurora.org/external/qoriq/qoriq-components/dpdk -b github.qoriq-os/integration
  ```

  Once the above repository has been cloned, DPDK source code is available for compilation. This source is common for both, DPAA, DPAA2, ENETC, and PPFE platforms.

Prerequisites before compiling DPDK

Before compiling DPDK as a standalone build, following dependencies need to be resolved independently:

- Platform compliant and compiled Linux Kernel source code so that KNI modules can be built.
  - This is optional and if KNI module support is not required, this can be ignored.
  - For details of compiling platform compliant Linux Kernel, refer How to build LSDK with Flexbuild.
  - For disabling KNI module, see notes below.
- OpenSSL libraries required for building software crypto driver (OpenSSL PMD).
  - OpenSSL package needs to be separately compiled and libraries installed at a known path before DPDK build can be done.
  ```

— This is optional and if software crypto driver support is not required, this dependency can be ignored.

NOTE

Refer to How to build LSDK with Flexbuild for more information on how to build OpenSSL as part of Flexbuild system. If using Flexbuild and referring to this link for building OpenSSL package, commands specified below can be skipped.

Following steps are for building OpenSSL as a standalone package, outside the Flexbuild system. This is not a preferred way and should be used only if Flexbuild system is not available. Follow the steps given below to build OpenSSL package.

```
git clone git://git.openssl.org/openssl.git  # Clone the OpenSSL source code
cd openssl                                   # Change into cloned directory
git checkout OpenSSL_1_1_0g                  # Checkout the specific Tag supported by DPDK
```

Export the Cross Compilation tool chain for building OpenSSL for target. The following step for exporting cross compilation toolchain is required only when compiling on Host. On a target board, it is assumed default build toolchain would be used.

```
export CROSS_COMPILE=<path to uncompressed toolchain archive>/bin/aarch64-linux-gnu-
```

Configure the OpenSSL build system with following command. The `--prefix` argument specifies a path where OpenSSL libraries would be deployed after build completes. This is also a path which would be provided to DPDK build system for accessing the compiled OpenSSL libraries.

```
./Configure linux-aarch64  --prefix=<OpenSSL library path> shared
```

```
make depend
make
make install
export OPENSSL_PATH=<OpenSSL library path>
```

NOTE

When building DPDK on target board, it is possible that OpenSSL libraries required by DPDK are already available as part of the *rootfs*, in which case external compilation of OpenSSL package would not be required.

— For disabling OpenSSL PMD support, see notes below.

Compiling DPDK

Follow the below steps to compile DPDK once the above prerequisites are resolved. These steps are common for DPAA and DPAA2 targets and are needed only when cross compiling on a host for Layerscape boards as target. In case of direct compilation on target boards, it is assumed that prerequisites would be satisfied using the root filesystem. In case root filesystem doesn't contain necessary prerequisites, below steps would be required once prerequisites have been built/obtained independently.

1. Setup the environment for compilation
   a. Setup Linux Kernel path. This is optional and required only for KNI and ixgb_uio module compilation. Skip it, if ixgb_uio or KNI module or KNI example application is not required.

   ```
   export RTE_KERNELDIR=<Path to compiled Linux kernel to compile KNI kernel module>
   ```

   b. Setup cross compilation toolchain.

This step is required only on the host environment where default toolchain is not for target boards. When compiling on a target board, this step can be skipped.

```
export CROSS=<path to cross-compile toolchain>
```

c. Setup OpenSSL path for software crypto drivers (OpenSSL PMD). This is optional and can be skipped in case software crypto driver (OpenSSL PMD) support is not required.

```
export OPENSSL_PATH=<path to installed OpenSSL>
```

2. Use DPDK build system for compiling DPDK.

NOTE

DPDK binaries generated using below steps are compatible for DPAA, DPAA2, ENETC, and PPFE platforms. This is also valid when DPDK is build through Flexbuild build system. Refer How to build LSDK with Flexbuild for steps to build DPDK using Flexbuild build system.

a. Execute the following command:

```
make T=arm64-dpaa-linuxapp-gcc install DESTDIR=<location to install DPDK>
```

Where `DESTDIR=<location to install DPDK>` is an optional parameter to deploy all the DPDK binaries (libraries and example applications) to a standard Linux package specific layout within a directory represented by this parameter. Alternatively, a directory named `arm64-dpaa-linuxapp-gcc` is also created and binaries and libraries are also available in it.

b. **Disabling KNI and other kernel module compilation**: In case DPDK kernel modules is not required (`RTE_KERNELDIR` variable is not set), use the following command. `DESTDIR` can be added, as explained above, if required.

```
make T=arm64-dpaa-linuxapp-gcc CONFIG_RTE_KNI_KMOD=n CONFIG_RTE_EAL_IGB_UIO=n
CONFIG_RTE_EAL_IGB_UIO=n install
```

c. **Enabling software crypto driver support**: Software crypto driver (OpenSSL PMD) is disabled by default. If it is required set `OPENSSL_PATH` variable, use the following command. `DESTDIR` can be added, as explained above, if required.

```
make T=arm64-dpaa-linuxapp-gcc CONFIG_RTE_LIBRTE_PMD_OPENSSL=y EXTRA_CFLAGS="-I$
{OPENSSL_PATH}/include/" EXTRA_LDFLAGS="-L${OPENSSL_PATH}/lib/" install
```

d. In case KNI is not required and software crypto support is required, use the following command. `DESTDIR` can be added, as explained above, if required.

```
make T=arm64-dpaa-linuxapp-gcc CONFIG_RTE_LIBRTE_PMD_OPENSSL=y EXTRA_CFLAGS="-I$
{OPENSSL_PATH}/include/" EXTRA_LDFLAGS="-L${OPENSSL_PATH}/lib/" CONFIG_RTE_KNI_KMOD=n
CONFIG_RTE_EAL_IGB_UIO=n install
```

e. In case of `dpdk-pdump`, an example of multiprocess application, following command pattern can be used after replacing the `EXTRA_*` variables with apropriate path.

```
make T=arm64-dpaa-linuxapp-gcc CONFIG_RTE_LIBRTE_PMD_PCAP=y CONFIG_RTE_LIBRTE_PDUMP=y
EXTRA_LDFLAGS="-L/path/to/compiled/LIBPCAP/lib" EXTRA_CFLAGS="-I"-L/path/to/compiled/
LIBPCAP/include" CONFIG_RTE_KNI_KMOD=n CONFIG_RTE_EAL_IGB_UIO=n install
```

NOTE

The LIBPCAP library and headers provided to above build command should have been cross-compiled for `aarch64` and should be copied over to the board before executing the binary.

NOTE

Currently, `dpdk-pdump` is supported only with `testpmd` application compiled using same build steps. Other applications would require modification for supporting packet capturing support before being run with `dpdk-pdump`.

NOTE

For more information about the DPDK build system, refer DPDK Documentation.

NOTE

DPDK `arm64-dpaa-linuxapp-gcc` folder contains `.config` file for storing the build configuration. Another way of disabling or enabling support features, like KNI and software crypto drivers, is to edit this file before executing the `make` command. If this method is adopted, parameters to command line for disabling the feature are not required.

NOTE

If KNI or software crypto driver support is disabled using the `make` command line parameters, it would *not* modify the configuration file for DPDK in the `<target>` folder. Every subsequent compilation of DPDK or example application would need to include the same command line arguments to avoid failure because of missing features which were not compiled. Or, edit the `.config` folder in the `arm64-dpaa-linuxapp-gcc` build folder.

Compiling DPDK example applications

Once the DPDK source code has been compiled, the DPDK example applications can be built independently as required.

1. Before the example applications can be built, the path to DPDK SDK needs to be set which includes the DPDK source code. This would be used by build system to look for compiled libraries and headers.

```
export RTE_SDK=<path to DPDK source code, where compilation was done>
```

2. Target should be set to same value as done for compilation of DPDK.

```
export RTE_TARGET=arm64-dpaa-linuxapp-gcc
```

3. Once the above variables are set, example applications can be compiled using the following commands:

   Some applications like `testpmd`, `dpdk-procinfo` and `dpdk-pdump` (last two being multiprocess examples), are generated as part of default build. These would be available in `<build folder>/app/` folder. Steps for these applications are defined in the Compiling DPDK section above.

   For other example applications which are part of the `examples/` folder, one of following is applicable:

```
make -C examples/l3fwd            # for the L3 forwarding application
```

```
make -C examples/l2fwd            # for the L2 forwarding application
```

```
make -C examples/ip_fragmentation # for the IP fragmentation application
```

```
make -C examples/ip_reassembly    # for the IP reassembly application
```

```
make -C examples/ipsec-secgw      # for the IPSec gateway application

make -C examples/ipsec-secgw CONFIG_RTE_LIBRTE_PMD_OPENSSL=y EXTRA_CFLAGS="-I${OPENSSL_PATH}/
include/" EXTRA_LDFLAGS="-L${OPENSSL_PATH}/lib/" # for IPSec application with openssl PMD
```

```
make -C examples/l2fwd-crypto     # for the L2 forwarding with crypto support application

make -C examples/l2fwd-crypto CONFIG_RTE_LIBRTE_PMD_OPENSSL=y EXTRA_CFLAGS="-I${OPENSSL_PATH}/
```

```
include/" EXTRA_LDFLAGS="-L${OPENSSL_PATH}/lib/"  # for L2 forwarding crypto operations with
openssl PMD
```

Above are sample commands for a limited set of DPDK example applications. Other applications too be compiled using similar command pattern.

```
make -C examples/<Name of examples directory>
```

NOTE

All the example applications currently supported by DPDK are available as part of the DPDK source code in the `./examples/` folder. Other examples can also be compiled using the pattern stated above.

NOTE

`testpmd` is not supported on platforms with single core, for example LS1012 (PPFE). This is because `testpmd` requires one core for its CLI or management (timer) threads.

4. Once the example application are compiled, the binaries would be available in the following folder within the DPDK source code folder:

```
examples/<name of example application>/build/app/*
```

Besides the above example application, DPDK also provides a `testpmd` binary which can be used for comprehensive verification of DPDK driver (PMD) features for available and compatible devices. This binary is compiled by default during DPDK source compilation explained in Compiling DPDK section.

NOTE

Only a small set of DPDK example applications are currently deployed to root filesystem (`/usr/local/bin`) when compiling DPDK through Flexbuild build system. These are: `l2fwd`, `l3fwd`, `l2fwd-crypto`, `ipsec-gw`, `cmdif_demo`, `ip_fragmentation`, `ip_reassembly`, `l2fwd-qdma` and `testpmd`.

9.2.3.4 DPDK based Packet Generator

Pktgen is a packet generator powered by DPDK. It requires DPDK environment for compilation and DPDK compliant infrastructure for execution. DPAA and DPAA2 DPDK PMD (Poll Mode Drivers) can be used by Pktgen for building a packet generator using the DPAA infrastructure.

Prerequisites for compiling Pktgen

For compiling Pktgen, **libpcap** library is required. If **Pktgen** is being built as a cross compiled target, the `libpcap` too should be compiled against the same compiled. If using the Flexbuild system, libpcap can be obtained as an external package from Ubuntu repository. Refer How to build LSDK with Flexbuild for more information.

NOTE

For libpcap library compilation and deployment, refer Tcpdump and libpcap project pages. Libpcap current and past releases can be obtained from this link. Documentation for libpcap is included in its source code. Also note that libpcap should be compiled for target board if working in a cross compilation environment.

Obtaining the Pktgen source code

Fetch the **Pktgen** source code using the following clone command:

```
git clone http://dpdk.org/git/apps/pktgen-dpdk
git checkout pktgen-19.12.0
```

Compiling Pktgen

Compilation steps below assume that compiled DPDK binaries (libraries and headers) are available in build directory generated by DPDK. Refer DPDK Build Steps for compiling DPDK and creating the build (`arm64-dpaa-linuxapp-gcc`) directory. Further, it is expected that `libpcap` libraries and headers are also present in this build folder.

Export the path to DPDK build environment and build folder defined by the compilation target:

```
export RTE_SDK=<path to compiled DPDK source code containing build folder>
```

```
export RTE_TARGET=<arm64-dpaa-linuxapp-gcc or arm64-dpaa-linuxapp-gcc>  # Select the build folder
based on required DPAA or DPAA2 target>
```

Build the source code:

```
make
```

Before executing the Pktgen application

For executing the Pktgen application, *Pktgen.lua* file and *pktgen* binary are needed on the execution environment.

If build was done using a cross compiled environment, transfer these binaries to the target environment from the build host. If the compilation was done on the target board, skip this step.

```
cd <Pktgen compiled source code>
cp Pktgen.lua <target board>
cp app/app/arm64-dpaa-linuxapp-gcc/pktgen <target board>
```

9.2.3.5 Build OVS-DPDK using Flexbuild

OVS is a popular multilayer virtual switch for enabling massive network automation through programmatic extensions.

OVS-DPDK is one of the application packages of the Flexbuild system which used DPDK as underlying framework. This section details method to build OVS-DPDK as a standalone package within the Flexbuild environment. It is assumed that the Flexbuild environment has already been configured before executing the commands below.

Refer to Layerscape SDK user guide for complete details of using the Flexbuild build system.

NOTE

In the Flexbuild configurations, OVS-DPDK needs to be configured to '`y`' for enabling packaging of OVS-DPDK in Flexbuild generated root filesystem, if not already enabled. For more information, refer How to build LSDK with Flexbuild.

Once the Flexbuild environment has been setup, following commands can be used to build OVS-DPDK package. Generated files (libraries and binaries) would be available in the `<Flexbuild>/build/apps/components_arm64` folder. Once the *rootfs* (root filesystem) is generated, the *components_arm64* folder would be merged in it.

```
$ flex-builder -c ovs_dpdk
```

NOTE

OVS-DPDK is dependent on DPDK package as it is used as its underlying framework. Flexbuild is designed to compile DPDK before OVS-DPDK if not already built.

Layout of OVS-DPDK Binaries

A OVS-DPDK binary image supports both the DPAA and DPAA2 platforms. Once the OVS-DPDK package has been installed, binaries would be available in `/usr/local/` folder in the rootfs. Flexbuild system generates a single rootfs for all NXP platforms it supports.

NOTE

OVS-DPDK binaries are deployed into the root filesystem as per the default layout of installation target for OVS-DPDK build system.

Table below depicts various OVS-DPDK artifacts which are available in the Flexbuild generated rootfs:

S/No	File/Image name related to `/usr/local/`	Description

1	`./bin/ovs-dpctl`
	`./bin/ovs-vsctl`
	`./bin/ovsdb-client`
	`./sbin/ovsdb-server`
	`./sbin/ovs-vswitchd`
	And various other binaries installed by OVS package as default.
		For both, DPAA and DPAA2, platforms.
		Various OVS binaries.

2	`./share/man/man7/ovs-*`	Various OVS man-pages.

9.2.3.6 Virtual machine (VM or guest) images

This section describes steps for deploying a Virtual Machine and executing DPDK applications in it. Additionally, OVS-DPDK package is used for deploying a software switch on the host machine through which virtual machines communicate with other virtual machine or external network.

NOTE

For obtaining necessary artifacts (kernel image, rootfs) for booting up a virtual machine on Layerscape board, refer Configuring and Building KVM/Qemu.

9.2.4 Executing DPDK Applications on Host

This section describes how to execute DPDK and related applications in both Host and VM environments.

NOTE

`IP_ADDR_BRD`, `IP_ADDR_IMAGE_SERVER`, and `TFTP_BASE_DIR` are not U-Boot or Linux environment variables. They are used in this document to represent:

1. **IP_ADDR_BRD**: IP address of target board in test setup.
2. **IP_ADDR_IMAGE_SERVER**: IP address of the machine where all the software images are kept. These images are transferred to the board using either tftp or scp.
3. **TFTP_BASE_DIR**: TFTP base directory of TFTP server running on the machine where images are kept.

9.2.4.1 Booting up the Target board

Follow the instructions mentioned in LSDK Quick Start to get the target board up and working.

NOTE

While bringing up various platforms, use the following boot arguments to obtain best performance. This can be done by appending the following string to the `othbootargs` environment variable in *uboot*. If othbootargs is not present, create a new variable.While booting up, the boot scripts would append the `othbootargs` to the `bootargs` variable.

```
For LX2160ARDB
default_hugepagesz=1024m hugepagesz=1024m hugepages=8 isolcpus=1-15 iommu.passthrough=1
```

```
For LS2088ARDB/LS1088ARDB
default_hugepagesz=1024m hugepagesz=1024m hugepages=8 isolcpus=1-7 iommu.passthrough=1
For LS1046ARDB
default_hugepagesz=1024m hugepagesz=1024m hugepages=4 isolcpus=1-3 bportals=s0 qportals=s0
iommu.passthrough=1
For LS1043ARDB
default_hugepagesz=2MB hugepagesz=2MB hugepages=512 isolcpus=1-3 bportals=s0 qportals=s0
iommu.passthrough=1
For LS1028ARB
default_hugepagesz=2MB hugepagesz=2MB hugepages=256 isolcpus=1 iommu.passthrough=1
For LS1012ARDB
default_hugepagesz=2MB hugepagesz=2MB hugepages=256 iommu.passthrough=1
```

Above setting insures that available number of hugepages are available with the application depending on the platform. `isolcpus` insures that Linux Kernel doesn't use these CPUs for scheduling its tasks - that prevents context switching of any application running on these cores. If the installed memory is lesser, lower number of hugepages can be used.

`iommu.passthrough=1` is to disable SMMU configuration by kernel which is ignored in case of DPDK userspace application. Though, this setting should does impact security context of enviroment and should be done after due-dilligence.

The `bportals` and `qportals` ensures that only 1 portal is available for kernel use (since only one core is for kernel), rest are available for user space. This setting is needed only for DPAA1 platforms.

NOTE

Depend on the available memory, hugepage may be added to the system from command line as well.

```
echo 256 > /proc/sys/vm/nr_hugepages
Check it with:
cat /proc/meminfo
```

NOTE

For UEFI, to update the boot arguments please refer to UEFI section in the user manual.

Update grub.cfg file for hugepage and isolcpus related changes.

On DPAA2 platforms: "`rootwait=20 default_hugepagesz=1024m hugepagesz=1024m hugepages=8 isolcpus=1-7`"

On DPAA1 platforms: "`rootwait=20 default_hugepagesz=2MB hugepagesz=2MB hugepages=512 isolcpus=1-3 bportals=s0 qportals=s0`"

NOTE

Userspace mode for DPAA1: For the DPAA platform, DPDK specific Device Tree file (for example, **`fsl-ls1046a-rdb-usdpaa.dtb`** for LS1046ARDB, **`fsl-ls1046a-frwy-usdpaa.dtb`** for LS1046AFRWY and **`fsl-ls1043a-rdb-usdpaa.dtb`** for LS1043A) should be used for booting up the board.This Device tree file is configured to provide userspace applications with network interfaces.

Also note that once the above mentioned Device Tree configuration is used, all FMAN ports would be available in the userspace only. Changes to the Device Tree file would be required to assign some of the FMAN ports to Linux Kernel.

One can use the following method to replace default `fsl-ls104xa-rdb-sdk.dtb` with `fsl-ls104xa-rdb-usdpaa.dtb` to support DPDK on LS104XRDB platforms.

Example 1: After enterring Ubuntu on the board, run following instructions for LS1046ARDB:

```
cd /boot
mv fsl-ls1046a-rdb-sdk.dtb fsl-ls1046a-rdb-ori.dtb
ln -s fsl-ls1046a-rdb-usdpaa.dtb fsl-ls1046a-rdb-sdk.dtb
```

Then, reboot the board

As an alternative, the following method can be used.

Example 2: On the host computer, run the following instructions for LS1046ARDB:

```
cd flexbuild
source setup.env
sed -i 's/fsl-ls1046a-rdb-sdk.dtb/fsl-ls1046a-rdb-usdpaa.dtb/g' configs/board/
ls1046ardb/manifest
flex-builder -i mkdistroscr -a arm64
```

The new auto boot script will be in build/firmware/u-boot/ls1046ardb/ls1046ardb_boot.scr.

Then replace the old non-DPAA boot script in SD cards' boot partition with the one you just generated.

NOTE

Optionally follow the below instructions to assign one of the FMAN ports on LS104x (DPAA) RDB boards to Linux.

With standard flexbuild generated dtb all interfaces will be assinged to either Linux or Userspace. When using `fsl-ls1043a-rdb-sdk.dtb` or `fsl-ls1046a-rdb-sdk.dtb` all network interfaces will be assigned to Linux. When using `fsl-ls1046a-rdb-usdpaa.dtb` or `fsl-ls1046a-rdb-usdpaa.dtb` all network interfaces will be assigned to user space.
The example below shows the changes that are required to assign one network interface to Linux and configure FMAN to support DPDK applications.

Example: Modify `fsl-ls1046a-rdb-usdpaa.dts` file to assign FMAN ports to Linux by removing the following ethernet node that corresponds to `fm0-mac3` (RGMII-1).

```
                ethernet@2 {
                        compatible = "fsl,dpa-ethernet-init";
                        fsl,bman-buffer-pools = <&bp7 &bp8 &bp9>;
                        fsl,qman-frame-queues-rx = <0x54 1 0x55 1>;
                        fsl,qman-frame-queues-tx = <0x74 1 0x75 1>;
                };
```

Then modify the file `usdpaa_config_ls1046.xml` (located in `/usr/local/dpdk/dpaa`) by removing the corresponding port entry. For example the below entry needs to be removed for `fm0-mac3` (RGMII-1):

```
<port type="MAC" number="3" policy="hash_ipsec_src_dst_spi_policy_mac3"/>
```

On DPAA1, the port numbers are decided in the sequence they are getting detected. In case one or more ports is assigned to Linux kernel, the userspace port numbering will change. For example, once the above code change is done, `fm0-mac4` will become Port 0 in DPDK/Userspace.

9.2.4.2 Prerequisite for running DPDK applications

This section describes the procedures once the target platform is booted up and logged into the Linux shell. This section is applicable to DPAA, DPAA2, ENETC, and PPFE platforms and is organized as follows:

- Generic Setup contain common steps to be executed before executing any of DPDK sample application or external DPDK applications. One of these sections would be relevant depending on the platform DPAA, DPAA2, ENETC or PPFE being used.
- Application specific sections contain steps on how to execute the DPDK example and related applications.

  For more details refer the following topics:

  — Test Environment Setup
  — Generic Setup - DPAA
  — Generic Setup - DPAA2
  — Generic Setup - PPFE
  — Generic setup – ENETC
  — DPAA2: Multiple parallel DPDK Applications

9.2.4.2.1 Test Environment Setup

Test Environment Setup

Various sample application execution steps are detailed in the following sections. Figure below describes the setup containing the DUT (Device Under Test) and the Packet Generator (Spirent, Ixia or any other software/hardware packet generator). This is applicable for the commands provided in following section.

The setup includes a one-to-one link between DUT and Packet generator unit. DPDK application running on the DUT is expected to forward the traffic from one port to another. The setup below and commands described in following sections can be scaled for more number of ports.

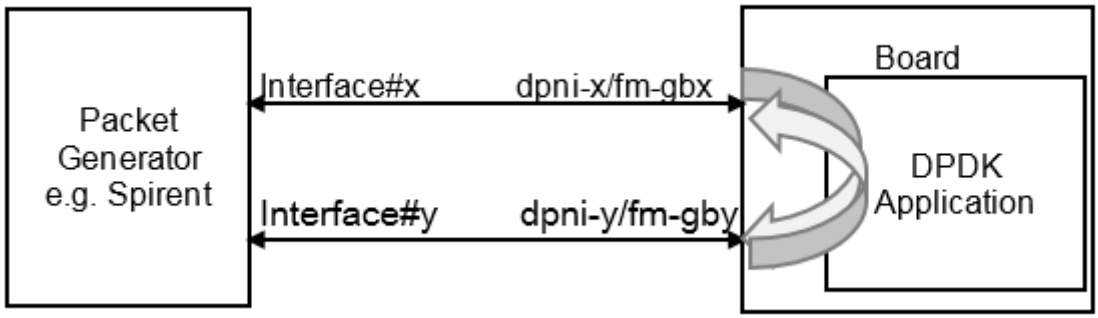

Figure 228. Test Setup

9.2.4.2.2 Generic Setup - DPAA

This section details steps required to setup necessary environment for execution of DPDK applications on DPAA platform. This section is applicable for sample as well as any external DPDK applications. For further details about the applicable configuration file for DPAA platform, refer to Build OVS-DPDK using Flexbuild. For DPAA2 platform specific setup, refer to Generic Setup - DPAA2.

DPAA Hardware Configuration files

NOTE

For automatic or dynamic FMAN queue configuration, use the `export DPAA_FMCLESS_MODE=1` environment variable. If this environment variable is set, DPDK based DPAA driver would automatically configure the number of queues as demanded by the application.

Default is non dynamic mode which requires user to run the *fmc* tool with exact queue configuration before running a DPDK application. This section provides details about this mode.

DPAA platforms supports hardware acceleration of packet queues. These queues need to be configured in the *FMAN (Frame Manager)* prior to being used. This can be done by choosing the appropriate policy configuration file packaged along with Flexbuild rootfs or DPDK source code.

Either of 1, 2, or 4 queue based policy files can be selected before application is executed. For example, 1 queue policy file would define single queue per physical interface of DPAA. Similarly, 2 and 4 queue are for defining 2 or 4 queues for each defined interface, respectively.

NOTE

For switching between different number of queue configuration, *fmc* tool is required to be run each time with new policy files. Before running *fmc* tool, `fmc -x` should be executed to clean old configuration.

Following are the available platform specific configuration files:

- `usdpaa_config_ls1043.xml` for LS1043ARDB board
- `usdpaa_config_ls1046.xml` for LS1046ARDB board
- `usdpaa_config_ls1046_frwy.xml` for LS1046AFRWY board

Following are the available policy files:

- `usdpaa_policy_hash_ipv4_1queue.xml` for 1 queue per port

- `usdpaa_policy_hash_ipv4_2queue.xml` for 2 queues per port
- `usdpaa_policy_hash_ipv4_4queue.xml` for 4 queues per port

> **NOTE**
>
> It is important to execute the applications using the same queue configuration as per the policy file used. This is because once the queue configuration is done, DPAA hardware would distribute packets across configured number of queues. Not consuming packets from any queue would lead to queue buildup eventually stopping the I/O.

Setting up the DPAA Environment

Configure number of queues using environment variable:

```
export DPAA_NUM_RX_QUEUES=<Number of queues>
```

Based on the number of queues defined in the above parameter, select the policy configuration file and execute the `fmc` binary:

```
fmc -x  # Clean any previous configuration/setting
fmc -c <Configuration file> -p <Policy File> -a
```

For example, in case of LS1043 platform, using 1 queue, following would be the command to execute:

```
export DPAA_NUM_RX_QUEUES=1
fmc -x
fmc -c ./usdpaa_config_ls1043.xml -p ./usdpaa_policy_hash_ipv4_1queue.xml -a
```

> **NOTE**
>
> It is important that value of `DPAA_NUM_RX_QUEUES` matches to the policy file being used. In case of mismatch, DPDK application may show unexpected behavior.

> **NOTE**
>
> LSDK 18.03 (or dpdk release 18.02) onwards DPAA platforms enables the push mode by default. That is, first 4 queues of an interface would be configured in Push mode, thereafter, all queues would use the default pull configuration. Push mode queues support higher performance configuration than standard pull mode queues, but are limited in numbers. To toggle the number of push mode queues, use the following environment variable:
>
> ```
> #export DPAA_PUSH_QUEUES_NUMBER=0 <default value is 4>
> ```
>
> Do note that configuring larger number of push mode queues than available (achievable), would lead to I/O failure. Max possible value of `DPAA_PUSH_QUEUES_NUMBER` on DPAA (LS1043, LS1046) is 8.

Setup hugepages for DPDK application to use for packet and general buffers. This step can be ignored if hugepages are already mounted. Use command `mount | grep hugetlbfs` to check if hugepages are already setup.

```
mkdir /dev/hugepages
```

```
mount -t hugetlbfs none /dev/hugepages
```

Hereafter, DPDK sample applications are ready to be executed on the DPAA platform.

Cleanup of the DPAA Environment

To remove the configuration done using the `fmc` tool, use the `-x` parameter. It is a good practice to cleanup the configuration before setting up a new configuration. Even in cases where change of configuration is required, for example, increasing the number of queues supported, following command can be used for cleaning up the previous configuration.

```
fmc -x
```

9.2.4.2.3 Generic Setup - DPAA2

This section details steps required to setup necessary environment for execution of DPDK applications over DPAA2 platform. This section is applicable for sample as well as any external DPDK applications. For further details about the applicable configuration file for DPAA2 platform, refer to Build OVS-DPDK using Flexbuild. For DPAA platform specific setup, refer to Generic Setup - DPAA.

These steps must be performed before running any of the DPDK application on host.

Setting up the DPAA2 Environment

For executing DPDK application on DPAA2 platform, a resource container needs to be created which contains all necessary interfaces to the DPAA2 hardware blocks. Necessary configuration scripts are provided with DPDK package for creating and destroying containers.

1. Configure the DPAA2 resource container with `dynamic_dpl.sh` script. This script is available under `/usr/local/dpdk/dpaa2/` folder in the rootfs.

   ```
   cd /usr/local/dpdk/dpaa2/     # Or, any other folder if custom installation of DPDK is done
   ./dynamic_dpl.sh <DPMAC1.id> <DPMAC2.id> ... <DPMACn.id>
   ```

   In the above command, `<DPMAC1.id>` refers to the DPAA2 MAC resource, for example, `dpmac.1` or `dpmac.2`. Modify the above command as per the number of physical MAC ports required by the application (constrained by availability and connectivity on the DUT).

   Output of `dynamic_dpl.sh` command shows the name of the container created. This name is passed to DPDK applications using the `DPRC` environment variable. Following block shows sample output of the `dynamic_dpl.sh` command:

   ```
   ##################### Container  dprc.2  is created ####################
   Container dprc.2 have following resources :=>

    * 16 DPBP
    * 5 DPCON
    * 4 DPSECI
    * 3 DPNI
    * 10 DPIO
    * 10 DPCI

   ######################### Configured Interfaces #########################

   Interface Name        Endpoint              Mac Address
   ==============        ========              ==================
   dpni.1                dpmac.1               -Dynamic-
   dpni.2                dpmac.2               -Dynamic-
   ```

   The MAC addresses are auto-assigned by the DPDK applications after fetching information from the firmware. These would be same as the one programmed by u-boot. For creating flows, see the application output or note the MAC addresses during board bootup. Testpmd application can also be used to find the MAC address assigned.

NOTE

In case of using UEFI-ACPI as boot loader, run `export BOARD_TYPE=2160` or `2088` before running `dynamic_dpl.sh`.

NOTE

It is possible to modify the number of interfaces (`DPBP`, `DPCON`, `DPNI`, etc) in a container. This can be done by defining environment variable `COMPONENT_COUNT=<number>` before executing the script. For example, to set number of DPBP to 4, use `export DPBP_COUNT=4`.

Though the flexibility has been provided to modify the interfaces in the container, note that resources need to be balanced and changing any count will require corresponding changes to other interfaces. Incorrect changes can render the DPDK application unable to execute.

2. Setup the environment variable using the container name reported by `dynamic_dpl.sh` command:

```
export DPRC=dprc.2
```

Once the above setup is complete, DPDK application can be executed on the DPAA2 platform.

Teardown of DPAA2 Environment

It might be required to change the configuration of the resource contain to modify the components included in it. As the number of resources in the system are limited, number of containers which can be created as also limited. It is possible to remove an existing container and create another.

Execute the following command to teardown a container:

```
cd /usr/local/dpdk/dpaa2                    # Or, any other folder if custom installation of DPDK
is done
./destroy_dynamic_dpl.sh <Container Name>  # for example, "dprc.2"
```

9.2.4.2.4 Generic Setup - PPFE

This section provides steps required to setup necessary environment for execution of DPDK applications over PPFE platform.

These steps must be performed before running any of the DPDK application on host.

Setting up the PPFE Environment

For executing DPDK application on PPFE platform, a kernel module `pfe.ko` must be loaded in user space mode which will do the necessary initialization to run the DPDK applications. By default, `pfe.ko` will be loaded automatically during kernel bootup. User must ensure the value of `/sys/module/pfe/parameters/us` is 1 to check pfe.ko module is loaded in user space mode. If `/sys/module/pfe/parameters/us` is not `1`, then user shall unload the module and then load again with module argument as `us=1`.

```
rmmod pfe.ko
insmod pfe.ko us=1
```

Additionally, user must run the below commands to fulfill DPDK applications huge pages requirements.

```
mkdir /mnt/hugepages
mount -t hugetlbfs none /mnt/hugepages
```

9.2.4.2.5 Generic setup – ENETC

This section details steps required to setup necessary environment for execution of DPDK applications over ENETC platform. This section is applicable for sample as well as any external DPDK applications.

These steps must be performed before running any of the DPDK application on host

Setting up the ENETC environment

For executing DPDK application on ENETC platform, ethernet devices need to be bound to "vfio-pci" driver. Necessary configuration script is provided with DPDK package.

This script is available under /usr/local/dpdk/enetc folder in the rootfs.

```
cd /usr/local/dpdk/enetc/     # Or, any other folder if custom installation of DPDK is done
./dpdk_configure_1028ardb.sh
```

This script enables two ethernet devices to be used by DPDK applications by binding them to "vfio_pci" driver. These devices on case are labeled as "1G MAC0" and "1G SWP0".

9.2.4.2.6 DPAA2: Multiple parallel DPDK Applications

This section describes steps for executing multiple parallel DPDK application on DPAA2 platform.

For executing multiple DPDK applications, each application instance should run with its own resource container (*DPRC*). This constraint is because of the way DPDK framework is designed to use a given container for exclusive use, irrespective of resources within, and bind it using VFIO layer. This design prevents parallel access to single resource container from multiple parallel instances of a single DPDK application, multiple parallel execution of different DPDK applications.

Creating Multiple DPRC instances

Using the resouce container script documented in this section, create multiple resource container instances on host. Following command creates a resource container with 2 network interfaces (and all other resources necessary to run a DPDK application).

First DPRC: (assuming name as `dprc.2` through rest of the document)

```
cd /usr/local/dpdk/dpaa2                  # Or, any other folder if custom installation of DPDK
is done
./dynamic_dpl.sh <DPMAC1.id> <DPMAC2.id>   # For example, execute ./dynamic_dpl.sh dpmac.1 dpmac.2
```

Second DPRC: (assuming name as `dprc.3` through rest of the document)

```
cd /usr/local/dpdk/dpaa2                  # Or, any other folder if custom installation of DPDK
is done
./dynamic_dpl.sh <DPMAC3.id> <DPMAC4.id>   # For example, execute ./dynamic_dpl.sh dpmac.3 dpmac.4
```

Executing multiple DPDK Applications

Once the resource containers are created, on two separate terminals, execute the following commands to run **l2fwd** application, bridging traffic between both interfaces available in the container:

```
export DPRC=dprc.2
cd /usr/local/bin
./l2fwd -c 0x3 -n 1 --file-prefix=p1 --socket-mem=1024 -- -p 0x3 -q 1
```

Some of the arguments, which are deviations from general **l2fwd** command, are explained below:

`--file-prefix`: Each DPDK Application attempts to allocate some hugepages for DMA'd area. This allocation is done in the hugepages through the use of *hugepage* mount, by creating and mapping a file. This arguments instructs the EAL to append a string to the file name. This way, multiple instances, having different such arguments, wouldn't attempt to open same hugepage mapping file.

`--socket-mem`: Passed to EAL, this instructs the EAL to allocate only specified amount of memory from the hugepages. By default, if this is not provided, a DPDK application would acquire all possible hugepages (all free pages) available on the Linux system.

For the second instance, command like following can be executed:

```
export DPRC=dprc.3
cd /usr/local/bin
./l2fwd -c 0xc -n 1 --file-prefix=p2 --socket-mem=1024 -- -p 0x3 -q 1
```

Note the difference of values for `-c` and `--file-prefix` between the first and second command.

9.2.4.3 DPDK example applications

DPDK example application binaries are available in the `/usr/local/bin` folder in the Flexbuild generated rootfs.

NOTE

Command snippets below assume that commands are executed while being present in `/usr/local/bin` or appropriate `PATH` variable has been set. Also, a DPDK binary can be executed on both, DPAA and DPAA2, platform without any modifications.

NOTE

Only a selected few DPDK example applications have been deployed in the root filesystem by default. For non-deployed example application, compilation needs to be done using DPDK source code. Refer Standalone build of DPDK libraries and applications for more details.

NOTE

For PPFE platform, since LS1012ARDB has only 1 core, so `-c` with 0x1 is only acceptable core mask for all DPDK applications. Additionally, user must provide the `—vdev` argument with value `net_pfe` to enable ethernet device for DPDK applications.

NOTE

For ENETC platform, LS1028A has 2 cores. For performance numbers, -c with 0x2 is the only supported core mask for all supported DPDK applications. User can verify functionality on both cores.

NOTE

Throughout the document below, `-n 1` argument has been added to the commands. This argument represents the splitting of buffers across the channels/ranks on DDR, if available. This is useful for NUMA cases. But, in non-NUMA , as is the case with NXP SoCs, this might impact performance in case the channel/ranks of DDR vary from standard/verified environment. Performance benchmarking should be done after analyzing the impact of this configuration.

l2fwd – Layer 2 forwarding application

Sample application to show forwarding between multiple ports based on the Layer 2 information (switching).

```
l2fwd -c 0x2 -n 1 -- -p 0x1 -q 1 -T 0
```

In the above command: `-c` refers to the core mask for cores to be assigned to DPDK; `-p` is the port mask for ports to be used by application; `-q` defines the number of queues to serve on each port. Other command line parameters may also be provided - for a complete list, refer L2 Forwarding Sample Application (in Real and Virtualized Environments).

NOTE

- `isolcpus` provided as boot argument to u-boot assures that isolated cores are not scheduled by Linux kernel. Using Core 0 for DPDK application can lead to non-deterministic behavior, including drop in performance. It is recommended that DPDK applicaton core mask values avoid using Core 0.
- L2fwd application periodically prints the I/O stats. To avoid CPU core to be interrupted because of these scheduled prints, `-T 0` option can be appended at the end of command line.
- Command to run `l2fwd` on LS1012ARDB:

```
./l2fwd -c 0x1 -n 1 --vdev 'net_pfe0' --vdev='net_pfe1' -- -p 0x3 -q 3
```

NOTE

For best performance on LS1046ARDB, use the following command. This includes an option `-b 7` which sets optimal I/O burst size:

```
l2fwd -c 0x2 -n 1 -- -p 0x1 -q 1 -T 0 -b 7
```

l2fwd-event – Event based Layer 2 forwarding application

Sample application to show event based forwarding between multiple ports based on the Layer 2 information (switching).

```
l2fwd-event -c 0x2 -n 1 --vdev=event_dpaa2 -- -p 0x1 -q 1 -T 0 --mode=eventdev --eventq-sched=atomic
```

In the above command: `-c` refers to the core mask for cores to be assigned to DPDK; `-p` is the port mask for ports to be used by application; `-q` defines the number of queues to serve on each port; change `--vdev=event_dpaa` for DPAA devices; `--mode` can be `poll` or `eventdev`; `--eventq-sched` can be `ordered`, `atomic` or `parallel`. Other command line parameters may also be provided - for a complete list, refer L2 Forwarding Eventdev Sample Application

l2fwd–qdma - Layer 2 forwarding application using QDMA (DPAA2 only)

Sample application to show forwarding between multiple ports based on the Layer 2 information (switching) using QDMA. In this application, when a packet is Rx'd, a corresponding packet buffer is allocated for Tx. Data from the Rx packet is DMA copied over to the Tx buffer using the QDMA block. Then, Rx buffer is released by the application; Tx buffer is transmitted out.

```
l2fwd-qdma -c 0x2 -n 1 -- -p 0x1 -q 1 -m 1 -T 0
```

In the above command: `-c` refers to the core mask for cores to be assigned to DPDK; `-p` is the port mask for ports to be used by application; `-q` defines the number of queues to serve on each port. `-m` mode specifies HW (-m is 0) or Virtual (-m is 1) mode for QDMA queues. Apart from `-m` parameter other parameters are similar to DPDK l2fwd application -refer L2 Forwarding Sample Application (in Real and Virtualized Environments).

l3fwd – Layer 3 forwarding application

Sample application to show forwarding between multiple ports based on the Layer 3 information (routing).

```
l3fwd -c 0x6 -n 1 -- -p 0x3 --config="(0,0,1),(1,0,2)"
```

In the above command: `-c` refers to the core mask for cores to be assigned to DPDK; `-p` is the port mask for ports to be used by application; `--config` is *(Port, Queue, Core)* configuration used by application for attaching cores to queues on each port. Other command line parameters may also be provided - for a complete list, refer L3 Forwarding Sample Application.

Other variations of the above command described below change the configuration of ports, queue and cores services them.

1. 4 core - 2 Port, 2 queues per port:

```
l3fwd -c 0xF -n 1 -- -p 0x3 -P --config="(0,0,0),(0,1,1),(1,0,2),(1,1,3)"
```

2. 4 core - 2 Port with destination MAC address:

```
l3fwd -c 0xF -n 1 -- -p 0x3 -P --config="(0,0,0),(0,1,1),(1,0,2),(1,1,3)" --eth-
dest=0,11:11:11:11:11:11 --eth-dest=1,00:00:00:11:11:11
```

3. 8 core - 2 Port with 4 queues per port:

```
l3fwd -c 0xFF -n 1 -- -p 0x3 -P --config="(0,0,0),(0,1,1),(0,2,2),(0,3,3),(1,0,4),(1,1,5),
(1,2,6),(1,3,7)"
```

NOTE

Although, above command snippets use the Core 0 for DPDK application, for best performance Core 0 use is not recommended as Linux OS schedules its tasks on it. It is also recommended that `isolcpus` be used in Linux boot argument to prevent Linux from scheduling tasks on other Cores.

NOTE

Example command to run l3fwd on LS1012ARDB:

```
./l3fwd -c 0x1 --vdev='net_pfe0' --vdev='net_pfe1' -n 1 -- -p 0x3 --
config="(0,0,0),(1,0,0)" -P
```

NOTE

For best performance on LS1046ARDB, use the following command. This includes an option `-b 7` which sets optimal I/O burst size:

```
l3fwd -c 0xF -n 1 -- -p 0x3 -P -b 7 --config="(0,0,0),(0,1,1),(1,0,2),(1,1,3)"
```

This is valid for any configuration of cores, queues and ports (i.e., `--config` option).

For LX2 Platform, while running on all available cores, the core mask parameters passed to `l3fwd` needs to be adjusted for 16 available cores. Following is an example of using all 16 cores on LX2, 2 Ports, 8 queues per port:

```
l3fwd -c 0xffff -n 1 -- -p 0x3 -
P --config="(0,0,0),(0,1,1),(0,2,2),(0,3,3),(0,4,4),(0,5,5),(0,6,6),(0,7,7),
(1,0,8),(1,1,9),(1,2,10),(1,3,11),(1,4,12),(1,5,13),(1,6,14),(1,7,15)"
```

l2fwd-crypto – Layer 2 forwarding using SEC hardware

This variation of Layer 2 forwarding application uses SEC block for encryption of packets.

- Layer 2 forwarding with Cipher only support:

```
l2fwd-crypto -c 0x2 -n 1 -- -p 0x1 -q 1  --chain CIPHER_ONLY  --cipher_algo aes-cbc --cipher_op
ENCRYPT --cipher_key 01:02:03:04:05:06:07:08:09:0a:0b:0c:0d:0e:0f:10
```

- Layer 2 forwarding with Cypher-Hash support:

```
l2fwd-crypto -c 0x2 -n 1 -- -p 0x1 -q 1 --chain CIPHER_HASH  --cipher_algo aes-cbc --
cipher_op ENCRYPT --cipher_key 01:02:03:04:05:06:07:08:09:0a:0b:0c:0d:0e:0f:10 --auth_algo sha1-
hmac --auth_op GENERATE --auth_key_random_size 64
```

- Layer 2 forwarding with Hash only support:

```
l2fwd-crypto -c 0x2 -n 1 -- -p 0x1 -q 1 --chain HASH_ONLY --auth_algo sha1-hmac --auth_op
GENERATE --auth_key_random_size 64
```

NOTE

For LS1028, `--iova-mode=pa` should also be added as command line parameter.

l2fwd-crypto – Layer 2 forwarding using OpenSSL software instructions

This variation of Layer 2 forwarding application uses OpenSSL library for performing software crypto operations. Internally, the OpenSSL library would use the ARMCE instructions specific for Arm CPUs. For DPDK, this application uses the OpenSSL PMD as its underlying driver.

NOTE

This command requires support of OpenSSL package while building the DPDK applications. Refer this section of this document, for details about toggling compilation of software crypto support, which includes the OpenSSL driver.

NOTE

In all the commands described below, `-T 0` has been appended which disables output on the console/terminal. This is important for performance reasons. Though, for debugging purposes or for knowing the number of packets transacted, remove the arguments or set a higher value in seconds.

- Cipher_only
  - For DPAA Platform
    - 1 core: Depending on the platform being executed on, append the above blacklisting parameter to the end of this command:

```
l2fwd-crypto --vdev "crypto_openssl"  -c 0x2 -n 1 -- -p 0x1 -q 1
--chain CIPHER_ONLY --cipher_algo aes-cbc --cipher_op ENCRYPT --cipher_key
01:02:03:04:05:06:07:08:09:0a:0b:0c:0d:0e:0f:10 --cryptodev_mask 0x10 -T 0
```

    - 2 core: Depending on the platform being executed on, append the above blacklisting parameter to the end of this command:

```
l2fwd-crypto --vdev "crypto_openssl0" --vdev "crypto_openssl1" -c 0x6 -n 1 -- -p
0x3 -q 1  --chain CIPHER_ONLY  --cipher_algo aes-cbc --cipher_op ENCRYPT --cipher_key
01:02:03:04:05:06:07:08:09:0a:0b:0c:0d:0e:0f:10 --cryptodev_mask 0x30 -T 0
```

    - 4 core: Depending on the platform being executed on, append the above blacklisting parameter to the end of this command:

```
l2fwd-crypto --vdev "crypto_openssl0" --vdev "crypto_openssl1" --vdev "crypto_openssl2"
--vdev "crypto_openssl3" -c 0xf -n 1 -- -p 0xf -q 1  --chain CIPHER_ONLY  --cipher_algo
aes-cbc --cipher_op ENCRYPT --cipher_key 01:02:03:04:05:06:07:08:09:0a:0b:0c:0d:0e:0f:10
--cryptodev_mask 0xF0 -T 0
```

  - For DPAA2 Platform

- 1 core: Depending on the platform being executed on, append the above blacklisting parameter to the end of this command:

```
l2fwd-crypto --vdev "crypto_openssl" -c 0x2 -n 1 -- -p 0x1 -q 1
--chain CIPHER_ONLY --cipher_algo aes-cbc --cipher_op ENCRYPT --cipher_key
01:02:03:04:05:06:07:08:09:0a:0b:0c:0d:0e:0f:10 --cryptodev_mask 0x100 -T 0
```

- 2 core: Depending on the platform being executed on, append the above blacklisting parameter to the end of this command:

```
l2fwd-crypto --vdev "crypto_openssl0" --vdev "crypto_openssl1" -c 0x6 -n 1 -- -p
0x3 -q 1  --chain CIPHER_ONLY  --cipher_algo aes-cbc --cipher_op ENCRYPT --cipher_key
01:02:03:04:05:06:07:08:09:0a:0b:0c:0d:0e:0f:10 --cryptodev_mask 0x300 -T 0
```

- 4 core: Depending on the platform being executed on, append the above blacklisting parameter to the end of this command:

```
l2fwd-crypto --vdev "crypto_openssl0" --vdev "crypto_openssl1" --vdev "crypto_openssl2"
--vdev "crypto_openssl3" -c 0xf -n 1 -- -p 0xf -q 1  --chain CIPHER_ONLY  --cipher_algo
aes-cbc --cipher_op ENCRYPT --cipher_key 01:02:03:04:05:06:07:08:09:0a:0b:0c:0d:0e:0f:10
--cryptodev_mask 0xF00 -T 0
```

- Cipher_hash
  - For DPAA Platform:
    - 1 core: Append the above blacklisting parameter to the end of this command:

```
l2fwd-crypto --vdev "crypto_openssl" -c 0x2 -n 1 -- -p 0x1 -q 1
--chain CIPHER_HASH --cipher_algo aes-cbc --cipher_op ENCRYPT --cipher_key
01:02:03:04:05:06:07:08:09:0a:0b:0c:0d:0e:0f:10 --auth_algo sha1-hmac --auth_op GENERATE
--cryptodev_mask 0x10 --auth_key_random_size 64 -T 0
```

  - For DPAA2 Platform:
    - 1 core: Append the above blacklisting parameter to the end of this command:

```
l2fwd-crypto --vdev "crypto_openssl" -c 0x2 -n 1 -- -p 0x1 -q 1
--chain CIPHER_HASH --cipher_algo aes-cbc --cipher_op ENCRYPT --cipher_key
01:02:03:04:05:06:07:08:09:0a:0b:0c:0d:0e:0f:10 --auth_algo sha1-hmac --auth_op GENERATE
--cryptodev_mask 0x100 --auth_key_random_size 64 -T 0
```

  In the above ccommands, for scaling to multiple cores or ports, toggle the `-c` and `-p` arguments as described above.

- Hash_cipher
  - For DPAA Platform:
    - 1 core: Append the above blacklisting parameter to the end of this command:

```
l2fwd-crypto --vdev "crypto_openssl" -c 0x2 -n 1 -- -p 0x1 -q 1 --chain HASH_CIPHER
--auth_algo sha1-hmac --auth_op GENERATE --cipher_algo aes-cbc --cipher_op ENCRYPT
--cipher_key 01:02:03:04:05:06:07:08:09:0a:0b:0c:0d:0e:0f:10 --cryptodev_mask 0x10 --
auth_key_random_size 64 -T 0
```

  - For DPAA2 Platform:
    - 1 core: Append the above blacklisting parameter to the end of this command:

```
l2fwd-crypto --vdev "crypto_openssl" -c 0x2 -n 1 -- -p 0x1 -q 1 --chain HASH_CIPHER
--auth_algo sha1-hmac --auth_op GENERATE --cipher_algo aes-cbc --cipher_op ENCRYPT
```

```
--cipher_key 01:02:03:04:05:06:07:08:09:0a:0b:0c:0d:0e:0f:10 --cryptodev_mask 0x100 --
auth_key_random_size 64 -T 0
```

In the above commands, for scaling to multiple cores or ports, toggle the `-c` and `-p` arguments.

- Hash_only
  - For DPAA Platform:
    - 1 core: Append the above blacklisting parameter to the end of this command:

```
l2fwd-crypto --vdev "crypto_openssl" -c 0x2 -n 1 -- -p 0x1 -q 1 --chain HASH_ONLY --
auth_algo sha1-hmac --auth_op GENERATE --cryptodev_mask 0x10 --auth_key_random_size 64
-T 0
```

  - For DPAA2 Platform:
    - 1 core: Append the above blacklisting parameter to the end of this command:

```
l2fwd-crypto --vdev "crypto_openssl" -c 0x2 -n 1 -- -p 0x1 -q 1 --chain HASH_ONLY --
auth_algo sha1-hmac --auth_op GENERATE --cryptodev_mask 0x100 --auth_key_random_size 64
-T 0
```

  - For scaling to multiple cores or ports, toggle the `-c` and `-p` arguments as described above.

For more information on L2fwd-crypto application, refer to L2 Forwarding with Crypto Sample Application

NOTE

Example command to run l2fwd-crypto with openssl on LS1012ARDB (cipher only):

```
./l2fwd-crypto -c 0x1 --vdev='net_pfe0' --vdev='crypto_openssl' -n 1 -- -p 0x1 -q 1 --chain
CIPHER_ONLY --cipher_algo aes-cbc --cipher_key 00:01:02:03:04:05:06:07:08:09:0a:0b:0c:0d:0e:0f --
cipher_op ENCRYPT -T 0
```

ipsec-secgw – IPSec gateway using SEC hardware

For IPsec application, two DUTs need to be configured as `endpoint 0 (ep0)` and `endpoint 1 (ep1)`. Assuming that `endpoint` have **4 ports** each:

- Connect Port 1 and Port 3 of the `ep0` and `ep1` to each other (back-to-back).
- Connect Port 0 and Port 2 of the `ep0` and `ep1` to packet generator (for example, Spirent).

The Stream generated by packet generator needs to have IP addresses in following pattern:

```
EP0:
    port 0: 32 flows with destination IP:
192.168.1.XXX, 192.168.2.XXX, ..... ,192.168.31.XXX,192.168.32.XXX
    port 2: 32 flows with destination IP:
192.168.33.XXX, 192.168.34.XXX, ..... ,192.168.63.XXX,192.168.64.XXX
EP1:
    port 0: 32 flows with destination IP:
192.168.101.XXX, 192.168.102.XXX, ..... ,192.168.131.XXX,192.168.132.XXX
    port 2: 32 flows with destination IP:
192.168.133.XXX, 192.168.134.XXX, ..... ,192.168.163.XXX,192.168.164.XXX
```

Above represents default configurations for the endpoints in `ep0_64X64.cfg` and `ep1_64X64.cfg`. Custom port mappings, SA/SP and the routes can be configured in the corresponding configuration file named as `ep0.cfg` and `ep1.cfg` for respective endpoint. These files are available in Flexbuild generated rootfs; for further details, refer this table.

For more information, refer to IPsec Security Gateway Sample Application.

Endpoint 0 (`ep0`) configuration:

```
ipsec-secgw -c 0xf -n 1 -- -p 0xf -P -u 0xa --config="(0,0,0),(1,0,1),(2,0,2),(3,0,3)" -
f ep0_64X64.cfg
```

Endpoint 1 (`ep1`) configuration:

```
ipsec-secgw -c 0xf -n 1 -- -p 0xf -P -u 0xa --config="(0,0,0),(1,0,1),(2,0,2),(3,0,3)" -
f ep1_64X64.cfg
```

NOTE

For LS1028, `--iova-mode=pa` should also be added as command line parameter.

Running IPSec gateway application with hardware protocol offload

The DPAA/DPAA2 SEC hardware also support IPSec protocol offload. The command and configurations are exactly same except the cfg files. For protocol offload, the cfg files are `ep0_64X64_proto.cfg` and `ep1_64X64_proto.cfg`. Performance with protocol offload would be much better than the standard case. *In case of platforms which have 8 cores, the command for 8 core will also be exactly same as non-offload case, except the name of the cfg files.*

Endpoint 0 (`ep0`) configuration:

```
ipsec-secgw -c 0xf -n 1 -- -p 0xf -P -u 0xa --config="(0,0,0),(1,0,1),(2,0,2),(3,0,3)" -f
ep0_64X64_proto.cfg
```

Endpoint 1 (`ep1`) configuration:

```
ipsec-secgw -c 0xf -n 1 -- -p 0xf -P -u 0xa --config="(0,0,0),(1,0,1),(2,0,2),(3,0,3)" -
f ep1_64X64_proto.cfg
```

NOTE

For LS1028, `--iova-mode=pa` should also be added as command line parameter.

Running IPSec gateway application with 8 cores

For running IPsec application with multiple queues using 64X64 tunnels and with 8 cores, following command and configuration needs to be done:

Endpoint 0 (`ep0`) configuration: Sample configuration for this is available in `ep0_64X64.cfg` file available in `/usr/local/dpdk/dpaa2/` folder in root filesystem.

```
ipsec-secgw -c 0xFF -n 1 -- -p 0xf -P -u 0xa --config="(0,0,0),(0,1,1),(1,0,2),(1,1,3),(2,0,4),
(2,1,5),(3,0,6),(3,1,7)" -f ep0_64X64.cfg
```

Endpoint 1 (`ep1`) configuration: Sample configuration for this is available in `ep1_64X64.cfg` file available in `/usr/local/dpdk/dpaa2/` folder in root filesystem.

```
ipsec-secgw -c 0xFF -n 1 -- -p 0xf -P -u 0xa --config="(0,0,0),(0,1,1),(1,0,2),(1,1,3),(2,0,4),
(2,1,5),(3,0,6),(3,1,7)" -f ep1_64X64.cfg
```

Running IPSec gateway application with 16 Cores on LX2 platform

For running IPsec application with multiple queues using 64X64 tunnels and with 16 cores, following command and configuration needs to be done:

Endpoint 0 (`ep0`) configuration: Sample configuration for this is available in `ep0_64X64_sha256_proto.cfg` file available in `/usr/local/dpdk/dpaa2/` folder in root filesystem.

```
./ipsec-secgw -c 0xFFFF  -n 1 -- -p 0xf -P -u 0xa --config="(0,0,0),(0,1,1),(0,2,2),(0,3,3),(1,0,4),
(1,1,5),(1,2,6),(1,3,7),(2,0,8),(2,1,9),(2,2,10),(2,3,11),(3,0,12),(3,1,13),(3,2,14),(3,3,15)" -
f ep0_64X64_sha256_proto.cfg
```

Endpoint 1 (`ep1`) configuration: Sample configuration for this is available in `ep1_64X64_sha256_proto.cfg` file available in `/usr/local/dpdk/dpaa2/` folder in root filesystem.

```
./ipsec-secgw -c 0xFFFF -n 1 -- -p 0xf -P -u 0xa --config="(0,0,0),(0,1,1),(0,2,2),(0,3,3),(1,0,4),
(1,1,5),(1,2,6),(1,3,7),(2,0,8),(2,1,9),(2,2,10),(2,3,11),(3,0,12),(3,1,13),(3,2,14),(3,3,15)" -
f ep1_64X64_sha256_proto.cfg
```

IPSec-secgw – IPSec gateway using OpenSSL PMD

The command, flow stream and port configuration is similar to the ipsec-secgw – IPSec gateway using SEC hardware command, flow stream and port configuration, except that it uses OpenSSL PMD for crypto operations. Internally, the OpenSSL PMD uses the ARMCE instructions for the Arm CPUs for performaning crypto operations.

- For DPAA Platform:
  - Endpoint 0 configuration

    ```
    ipsec-secgw -c 0xf -n 1 --vdev "crypto_openssl" -- -p 0xf -P -u 0xa --config="(0,0,0),(1,0,1),
    (2,0,2),(3,0,3)" --cryptodev_mask 0x10 -f ep0_64X64.cfg
    ```

    Endpoint 1 configuration

    ```
    ipsec-secgw -c 0xf -n 1 --vdev "crypto_openssl" -- -p 0xf -P -u 0xa --config="(0,0,0),(1,0,1),
    (2,0,2),(3,0,3)" --cryptodev_mask 0x10 -f ep1_64X64.cfg
    ```

- For DPAA2 Platform:
  - Endpoint 0 configuration

    ```
    ipsec-secgw -c 0xf -n 1 --vdev "crypto_openssl" -- -p 0xf -P -u 0xa --config="(0,0,0),(1,0,1),
    (2,0,2),(3,0,3)" --cryptodev_mask 0x100 -f ep0_64X64.cfg
    ```

    Endpoint 1 configuration

    ```
    ipsec-secgw -c 0xf -n 1 --vdev "crypto_openssl" -- -p 0xf -P -u 0xa --config="(0,0,0),(1,0,1),
    (2,0,2),(3,0,3)" --cryptodev_mask 0x100 -f ep1_64X64.cfg
    ```

NOTE

Example command to run ipsec-secgw with openssl on LS1012ARDB:

```
./ipsec-secgw -c 0x1 -n 1 --vdev='net_pfe0' --vdev='net_pfe1' --
vdev='crypto_openssl'  -- -p 0x3 -P -u 0x2 --config="(0,0,0),(1,0,0)" -
f ep0_64X64.cfg
```

KNI - Using Kernel Network Interface Module

The Kernel NIC Interface (KNI) is a DPDK control plane solution that allows userspace applications to exchange packets with the kernel networking stack. For details please refer: http://dpdk.org/doc/guides/sample_app_ug/kernel_nic_interface.html

Loading the KNI kernel module without any parameter. By default only one kernel thread is created for all KNI devices for packet receiving in kernel side:

```
#insmod rte_kni.ko
```

Affine the kni task to a single core e.g core number #1

```
#taskset -pc 1 `pgrep -fl kni_single | awk '{print $1}'`
```

Run the kni application

```
kni [EAL options] -- -P -p PORTMASK --config="(port,lcore_rx,lcore_tx[,lcore_kthread,..])
[,port,lcore_rx,lcore_tx[,lcore_kthread,..]]"
#./kni -c 0xf -n 1 -- -p 0x3 -P --config="(0,0,1),(1,0,1)"
where config is : (PORT, kni lcore Rx core, kni lcore tx core )
```

On another console check the interfaces with:

```
#ifconfig -a
```

Enable the given interface and assign IP address (if any)

QDMA demo application (DPAA2 only)

NOTE

`qdma_demo` application is not available as default in the LSDK rootfs. For compiling this application, refer Compiling DPDK Example Applications

On DPAA2, DPDMAI block provides a generic DMA capability which has been exposed by DPDK for its application to use. `qdma-demo` application in DPDK is a demonstration application which does a memory-to-memory or memory to pci memory or pci memory to memory transaction using this QDMA block. It can be executed in following manner:

- For MEM-to MEM use case, run below command.

```
qdma_demo -c 0x3 -n 1 -- --packet_size=512--test_case mem_to_mem
```

NOTE

`qdma_demo` requires more than 1 core to perform because it consumes at least one core for printing the output. Please refere to examples/qdma_demo/readme in dpdk source code for more details on usages.

This would print to screen an output similar to:

```

Time Spend :4000.005 ms rcvd cnt:1310720 pkt_cnt:0
Rate: 1342.176 Mbps OR 327.680 Kpps
processed on core 7 pkt cnt: 1310720
```

This output demonstrates the count of memory chunks which have been moved through QDMA block by the application. It also shows the time spent and the performance achieved, and packets sent per-core.

- For PCI-to-MEM and MEM-to-PCI, run following commands

End Point steps

1. If LX2-EP PCI card, boot it to u-boot prompt only
2. For standard PCI NIC card - nothing needs to be done.

HOST - LX2 Root complex steps

1. Boot LX2 to Linux prompt
2. run 'lspci -v' to check the address of BAR whose memory is targeted memory for test

```
$ lspci -v
        0000:01:00.0 Ethernet controller: Intel Corporation 82574L Gigabit Network Connection
       Subsystem: Intel Corporation Gigabit CT Desktop Adapter
        Flags: bus master, fast devsel, latency 0, IRQ 106
        Memory at 30460c0000 (32-bit, non-prefetchable) [size=128K]
        Memory at 3046000000 (32-bit, non-prefetchable) [size=512K]
        I/O ports at 1000 [disabled] [size=32]
        Memory at 30460e0000 (32-bit, non-prefetchable) [size=16K]
        Expansion ROM at 3046080000 [disabled] [size=256K]
Kernel driver in use: e1000e
```

3. Assign PCI device to userspace

   - load the UIO module, if not loaded already

```
#modprobe uio_pci_generic
```

   - assign the device to userspace

```
 #/usr/local/share/dpdk/usertools/dpdk-devbind.py --bind=uio_pci_generic 0000:01:00.1
```

4. Run qdma_demo application

   NOTE

   At least 2 cores are required to run the test, one core is used for printing results/stats, other cores for running test.

```
$export DPDMAI_COUNT=48
$./dynamic_dpl.sh dpmac.3
$export DPRC=dprc.2
```

   mem to pci (using a Gen2-x1 - 1G PCI NIC)

```
  $./qdma_demo -c 0x81 -- --pci_addr=0x3046000000 --packet_size=512 --test_case=mem_to_pci
```

   NOTE

   The current QDMA demo code read/write only 4KB area, that yield best bandwidth number. To test read/write big memory size, you can optionally pass `--pci_size` (size in byte) e.g for 2MB PCI use: `--pci_size`=2147483648. Add "`--latency_test`" for testing latency

Pktgen – DPDK based software packet generator

Pktgen is a software packet generator based on DPDK. Refer DPDK based Packet Generator for steps required for building *Pktgen*.

All the commands below assume that *Pktgen* application is either executed from current folder or appropriate path environment variable has been set.

1. 3 Port, 1 Core each

```
pktgen -l 0-3 -n 1 --proc-type auto --file-prefix pg --log-level 8 -- -T -P -m "[1].0,
[2].1, [3].2"
```

2. 1 Port, 2 Core

```
pktgen -l 0-3 -n 1 --proc-type auto --file-prefix pg --log-level 8 -- -T -P -m "[1:2].0"
```

3. To start or stop traffic on a specific port:

```
start 0 # start <port number>
stop 0  # stop <port number>
```

4. To start or stop traffic on all ports:

```
str
stp
```

9.2.4.4 Command interface (CMDIF) demo application

DPDK based Command interface (CMDIF) demo application demonstrates the communication between GPP and AIOP using DPDK API's and Command Interface library. Command Interface library is provided as a lib module within `examples/cmdif/` (`examples/cmdif/lib/librte_cmdif.a`).

This application requires a corresponding process running on AIOP core/s, which will read and respond to CMDIF application. CMDIF application is only supported on DPAA2 which will have AIOP.

.

NOTE

Include the library `librte_cmdif.a`, when you are writing an application over DPAA2 CMDIF based raw device.

The application verifies the following:

1. CMDIF client (where GPP is the client and AIOP is the server)
2. CMDIF server (where GPP is the server and AIOP is the client)

CMDIF Client (GPP is client)

In the CMDIF client, the GPP is the client and the AIOP is the server. Requests are initiated by the GPP and are sent to the AIOP core. The AIOP responds back with the response.

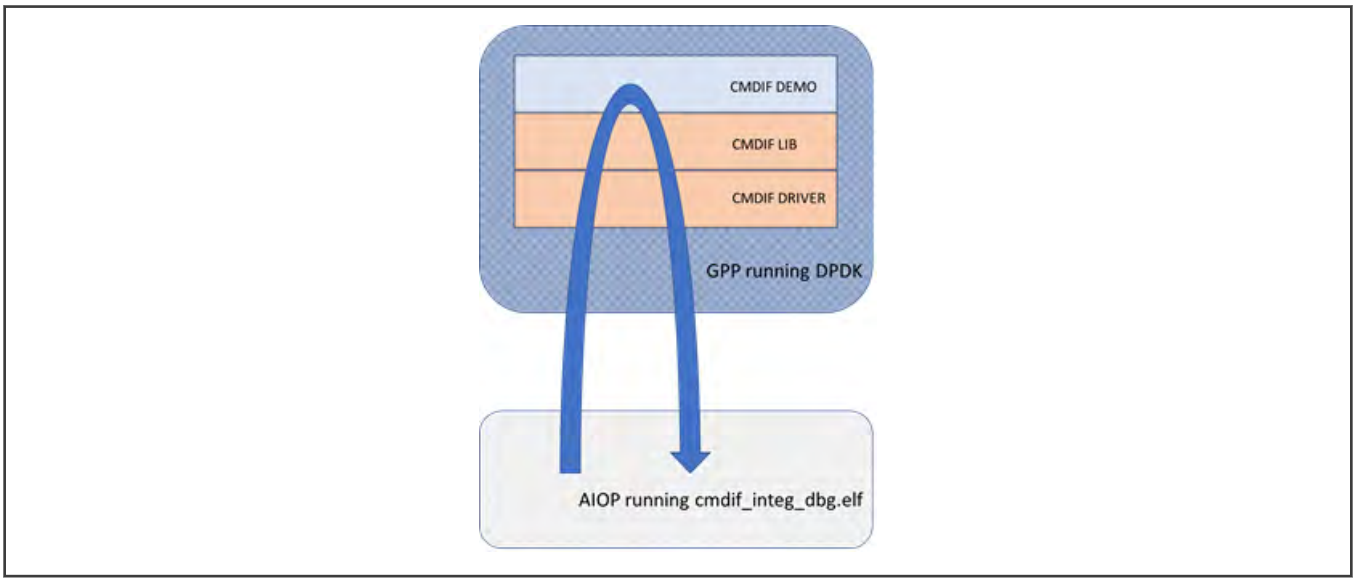

The CMDIF client (demo) is responsible for the following:

- Opens a CI communication channel using a single DPCI device, defined in container used by application

- Sends multiple messages from GPP to AIOP using synchronous commands
- Sends and receive response for multiple messages from GPP to AIOP using asynchronous commands
- Application Validates the response received from the AIOP Server application and prints the result on console
- Closes the opened CI communication channels

CMDIF Server (GPP is server)

In the CMDIF server, the GPP is the server and the AIOP is the client. Requests are initiated by the AIOP and are sent to the GPP core. The GPP responds back to the AIOP with success or error.

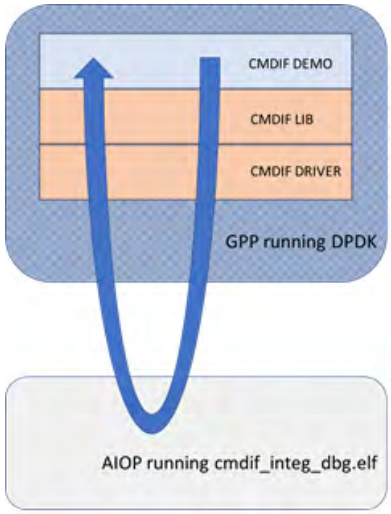

The CMDIF server (demo) is responsible for the following:

- Registers the server module
- Opens the Sever session
- Initiates the client open on the AIOP client
- Receives requests/commands from the AIOP
- Closes the server session
- Unregisters the module

Running demo application

The demo application showcases only a single thread or core use-case, thus supporting the coremask with single core.

NOTE

`dynamic_dpl.sh` is not required to run along with `cmdif_demo`.

Executing demo application example also requires the following:

- Running `dynamic_AIOP_dpl.sh` (*instead of dynamic_dpl.sh*)
- Loading the `cmdif_integ_dbg.elf` (provided in AIOPSL - https://github.com/qoriq-open-source/aiopsl/tree/integration/demos/images) using the `aiop_tool` which needs to run in background.

  For example:

```
./dynamic_AIOP_dpl.sh
export DPRC = > dprc container created for GPP<
```

```
aiop_tool load -g dprc.3 -f cmdif_integ_dbg.elf &
cmdif_demo -c 0x2
```

Description about the command:

- `dynamic_AIOP_dpl.sh` – creates three containers
  - First one for the AIOP
  - Second one for the aiop_tool which loads the AIOP FW
  - Third one for DPDK's use **(Use this container name as `$DPRC` export variable)**
- The -c option enables cores 2

Expected output

The application should print below logs on console in case of CMDIF client:

- PASSED open commands
- PASSED synchronous send commands
- PASSED asynchronous send/receive commands
- PASSED: close commands

Also, verify that application prints below logs in console in case of CMDIF server:

- PASSED cmdif session open
- PASSED sync command
- PASSED Async commands
- PASSED Isolation context test
- PASSED cmdif session close

9.2.5 OVS-DPDK and DPDK in VM with VIRTIO Interfaces

DPDK example and DPDK-based applications can also run inside the virtual machine. This section describes steps to run these applications inside the virtual machine on both DPAA and DPAA2 platforms.

The virtual machine runs inside the host Linux system and is launched by an application called QEMU.

NOTE

While using the virtual machine, the console logs for the guest Linux do not appear on the host Linux console (i.e UART). The guest logs are exposed through `telnet`, and they can be accessed by doing `telnet` on the host board's IP Address (`IP_ADDR_BRD`) and `GUEST_CONSOLE_TELNET_PORT`. Each Virtual machine that is run on a single host is allocated a different `GUEST_CONSOLE_TELNET_PORT`, and this port number is specified by user running virtual machine through the QEMU command line.

Following is the layout of the sub-sections of this chapter:

- Generic steps describing steps required for QEMU setup for both, DPAA and DPAA2 platforms.
- Configuring OVS describing steps necessary to launch OVS-DPDK on the host machine for switching traffic between VMs and external network.
- Various sections for lauching a virtual machine and executing a DPDK application:
  - Launch Virtual Machine for launching a virtual machine.
  - Accessing virtual machine console for accessing a virtual machine console from a network connected machine over `telnet`.
  - Launching two virtual machines for launching more than one virtual machine.

— Running DPDK applications in VM for running DPDK applications in the virtual machine.

- Multi Queue VIRTIO support describes steps for DPDK application using multiple queues.

9.2.5.1 Generic steps

Refer to Configuring and Building KVM/Qemu for detailed information about deploying virtual machines using KVM/QEMU using Layerscape boards.

The reference above serves as base for deploying Virtual Machines and DPDK application in them. All following sections assume that kernel image and virtual machine rootfs is available with DPDK sample application images in it.

NOTE

Give IP Address to the board so that virtual machine consoile can be accessed using telnet.

```
ifconfig eth<x> <IP_ADDR_BRD>
```

9.2.5.2 Configuring OVS

OVS-DPDK application binary and configuration files are available in the `/usr/local` folder in the Flexbuild generated rootfs.

It is assumed that before executing command snippets in this section, necessary steps mentioned in Generic steps have already been executed.

NOTE

Command snippets below assume that commands are executed while being present in `/usr/local/` folder. Or, appropriate `PATH` variable has been set. As the OVS commands are spread across multiple folder, each command snippet also shows the location of these binaries relative to above folder.

Command snippets below assume that commands are executed while being present in this folder or appropriate PATH variable has been set.

OVS is used as a back-end for VHOST USER ports. The physical ports on the target platform and the vhost user ports (virtio devices) are added to ovs-vswitch and the flows in OVS are programmed so as to establish traffic switching between physical ports and vhost devices as follows:

- Incoming traffic Physical port1 => output to vhost-user port 1
- Incoming traffic on vhost-user port1 => output on physical port 1
- Incoming traffic on physical port 2 => output on vhost-user port 2
- Incoming traffic on vhost-user port 2 => output on physical port 2

The following steps must be followed to setup OVS as vhost switching back-end:

1. Reset the OVS environment.

```
pkill -9 ovs
```

```
rm /usr/local/etc/openvswitch/conf.db
```

```
rm -rf /usr/local/var/run/openvswitch/vhost-user-1
```

```
rm -rf /usr/local/var/run/openvswitch/vhost-user-2
```

2. Specify the initial Open vSwitch (OVS) database to use:

```
mkdir -p /usr/local/etc/openvswitch  # If the folder doesn't already exist
```

```
mkdir -p /var/log/openvswitch        # to ensure that OVS logging can be done
```

```
mkdir -p /usr/local/var/run/openvswitch
```

```
cd /usr/bin/ovs-dpdk/
./ovsdb-tool create /usr/local/etc/openvswitch/conf.db ./vswitch.ovsschema
```

```
./ovsdb-server --remote=punix:/usr/local/var/run/openvswitch/db.sock --
remote=db:Open_vSwitch,Open_vSwitch,manager_options --pidfile=/tmp/ovsdb-server.pid --detach --
log-file=/var/log/openvswitch/ovs-vswitchd.log
```

```
export DB_SOCK=/usr/local/var/run/openvswitch/db.sock
```

3. Configure the OVS to support DPDK ports:

```
./ovs-vsctl --no-wait set Open_vSwitch . other_config:dpdk-init=true
```

4. Configure OVS to work with 1G memory (1024M) backed by hugepages

```
export SOCK_MEM=1024
```

```
./ovs-vsctl --no-wait set Open_vSwitch . other_config:dpdk-socket-mem="$SOCK_MEM"
```

5. Define Cores for OVS Operations

```
export OVS_SERVICE_MASK=0x1
export OVS_CORE_MASK=0x6
```

```
./ovs-vsctl  --no-wait set Open_vSwitch . other_config:dpdk-lcore-mask=$OVS_SERVICE_MASK
```

```
./ovs-vsctl  --no-wait set Open_vSwitch . other_config:pmd-cpu-mask=$OVS_CORE_MASK
```

NOTE

`OVS_CORE_MASK` should be chosen such as to not include Core 0. `OVS_SERVICE_MASK` should be any core which is not already assigned to `OVS_CORE_MASK`. This way, OVS services threads (defined by `OVS_SERVICE_MASK`) will not compete for CPU scheduling with OVS I/O threads (`OVS_CORE_MASK`). `OVS_SERVICE_MASK` can be set to Core 0 as defined in example abov

6. Set Exact Match Cache(EMC) Insertion probability to 1 so that cache insertion is performed for every flow.

```
$ ovs-vsctl --no-wait set Open_vSwitch . other_config:emc-insert-inv-prob=1
```

7. Start the ovs-vswitchd daemon:

```
./ovs-vswitchd unix:$DB_SOCK --pidfile --detach
```

NOTE

`--detach` option makes the daemon run in background. If this option is given same shell can be used to run further commands, otherwise ssh to the target board and run further commands. Each time you reboot or there is an OVS termination, you need to rebuild the OVS environment and repeat steps 1-6 of this section

8. Create an OVS bridge.

```
./ovs-vsctl add-br br0 -- set bridge br0 datapath_type=netdev
```

9. Create DPDK port

   For creating DPDK ports with OVS, platform specific port information needs to be provided to OVS.

   - ```
     ./ovs-vsctl add-port br0 dpdk0 -- set Interface dpdk0 type=dpdk options:dpdk-devargs=dpni.1
     ```

     ```
     ./ovs-vsctl add-port br0 dpdk1 -- set Interface dpdk1 type=dpdk options:dpdk-devargs=dpni.2
     ```

     Above commands attach the DPAA2 ports `dpni.1` and `dpni.2` with OVS. In case different ports are required, above command should be modified accordingly.

     NOTE

     For DPAA ports, replace `dpni.X` with `fm1-macX`. For example, `options:dpdk-devargs=fm1-mac3`.

     NOTE

     Another way to pass device names to OVS is to pass along with bus name. For example, for FSLMC/ DPAA2 devices, `options:dpdk-devargs=fslmc:dpni.1` can be used. For DPAA1, `options:dpdk-devargs=dpaa:fm1-mac3` can be used. DPDK would be able to parse either naming style, whether provided with bus name or without.

10. Create vhost-user port

```
./ovs-vsctl add-port br0 vhost-user1 -- set Interface vhost-user1 type=dpdkvhostuser
```

```
./ovs-vsctl add-port br0 vhost-user2 -- set Interface vhost-user2 type=dpdkvhostuser
```

11. Commands to Configure Multi Queues

```
./ovs-vsctl set Interface dpdk0 options:n_rxq=4
./ovs-vsctl set Interface dpdk1 options:n_rxq=4
./ovs-vsctl set Interface dpdk0 options:n_txq=4
./ovs-vsctl set Interface dpdk1 options:n_txq=4
```

NOTE

The above commands are required only in case of multi-queue use case(Four queues been used in above reference commands). For single queue mode no commands needed as OVS by default configures single queue.

12. Delete OVS flow

```
./ovs-ofctl del-flows br0
```

13. Set OVS flow rules for external-to-external path:
```

NOTE

The commands below configure a hard-coded bi-directional data path between Port 1 and Port 2. Use this step only for OVS external-to-external testing. For OVS Host-to-VM configuration, skip and continue with next step.

```
./ovs-ofctl add-flow br0 -O OpenFlow13 table=0,in_port=1,actions=output:2
```

```
./ovs-ofctl add-flow br0 -O OpenFlow13 table=0,in_port=2,actions=output:1
```

14. Set OVS flow rules between Host to VM:

NOTE

The steps below configure OVS such that `Port 1 <=> Port 3` and `Port 2 <=> Port 4` are connected to each other. If a different configuration is required, the commands below should be altered as well as VM configurations.

```
./ovs-ofctl add-flow br0 -O OpenFlow13 table=0,in_port=1,actions=output:3
```

```
./ovs-ofctl add-flow br0 -O OpenFlow13 table=0,in_port=3,actions=output:1
```

```
./ovs-ofctl add-flow br0 -O OpenFlow13 table=0,in_port=2,actions=output:4
```

```
./ovs-ofctl add-flow br0 -O OpenFlow13 table=0,in_port=4,actions=output:2
```

NOTE

OVS Switch (`ovs-vswitchd`) must be run before launching the virtual machine using QEMU, otherwise the virtual machine launch will fail.

15. Run the following command to enable emc-cache lookups in OVS. This helps in enhancing the lookup speed to ensure better performance.

```
./ovs-vsctl --no-wait set Open_vSwitch . other_config:emc-insert-inv-prob=1
```

16. Verify the Flows inserted:

```
./ovs-ofctl dump-flows br0
```

NOTE

Performance of OVS is highly dependent on the use-case - which includes the configuration of flows, the flows being pumped, SMC or EMC configuration etc. It is important to analyze these dependencies before performance measurement or benchmarking can be done. For performance benchmarking it is preferred that 256 flows are configured in the environment. Distribution (RSS) maybe impacted when number of flows are low; at the same time, if higher number of flows are used it would impact the cache usage.

9.2.5.3 Launch Virtual Machine

This section describes necessary environment setup and commands for launching a Virtual Machine (VM).

It is assumed that before executing command snippets in this section, necessary steps mentioned in Generic steps and Configuring OVS have already been executed.

Setup the environment

For accessing the VM, *telnet* is used. This environment variable defines the *telnet* port to be used.

```
export GUEST_CONSOLE_TELNET_PORT=4446    # Telnet port to be used for accessing the virtual machine
```

```
export ROOTFS_IMG=<VM_ROOTFS_IMG>
```

Define other environment variables which are used by the QEMU command to configure the virtual machine environment:

```
export VM_MEM=2048M
export VM_CORES=2
export NUM_QUEUES=1
```

NOTE

- VM_CORES are the number of cores to reserve for the virtual machine operation.

Export the following paths:

```
export VHOST1_PATH=/usr/local/var/run/openvswitch/vhost-user1
export VHOST2_PATH=/usr/local/var/run/openvswitch/vhost-user2
```

Launch QEMU and virtual machine

Launch the QEMU emulator using the following command.

```
qemu-system-aarch64 -nographic -object memory-backend-file,id=mem,size=$VM_MEM,mem-path=/mnt/
hugepages,share=on -cpu host -machine type=virt -kernel /boot/Image -enable-kvm  -serial
tcp::$GUEST_CONSOLE_TELNET_PORT,server,telnet -append 'root=/dev/vda rw console=ttyAMA0,115200
rootwait earlyprintk' -m $VM_MEM -numa node,memdev=mem -chardev socket,id=char1,path=$VHOST1_PATH
-netdev type=vhost-user,id=hostnet1,chardev=char1,vhostforce,queues=$NUM_QUEUES -
device virtio-net-pci,disable-modern=false,addr=0x3,netdev=hostnet1,id=net1,mrg_rxbuf=off
-chardev socket,id=char2,path=$VHOST2_PATH -netdev type=vhost-
user,id=hostnet2,chardev=char2,vhostforce,queues=$NUM_QUEUES -device virtio-net-pci,disable-
modern=false,addr=0x4,netdev=hostnet2,id=net2,mrg_rxbuf=off -smp $VM_CORES -S -drive
if=none,file=$ROOTFS_IMG,id=foo,format=raw -device virtio-blk-device,drive=foo
```

NOTE

For best performance, Core 0 in the VM should not be used for DPDK I/O threads.

Also, to avoid system services from using GPUs scheduled for DPDK I/O threads, it is recommended that `isolcpus` be used for isolating cores from Linux Kernel scheduling in VM. The exact configuration is dependent on number of CPU assigned by QEMU to VM using the `VM_CORES` environment variable.

Append `isolcpus=1-$VM_CORES` to the '`root=/dev/vda rw console=ttyAMA0,115200 rootwait earlyprintk`' string in the `qemu-system-aarch64` command given above.

NOTE

Extra care should be taken for value assigned to `mem-path` variable. It should point to a valid mounted hugepage filesystem. In case the value assigned to `mem-path` is not a valid hugepage filesystem, Qemu would create a mmap'd file for its work which might negatively impact performance.

Following logs will appear on the host UART console:

```
QEMU 2.11.1 monitor - type 'help' for more information
(qemu) QEMU waiting for connection on: disconnected:telnet::4446,server
```

NOTE

Complete QEMU logs are visible only when `telnet` is used for logging into the guest machine, as described in Accessing virtual machine console.

The `-S` option mentioned in the qemu command stops the virtual machine bootup after initial setup. Run the `info cpus` command on QEMU CLI interface to see the QEMU threads.

```
(qemu) info cpus
* CPU #0: thread_id=2559
  CPU #1: (halted) thread_id=2560
```

SSH on the board (`telnet` to `IP address IP_ADDR_BRD`) from other console and affine the threads to the cores using the `taskset` command:

```
taskset -p 0x4 <tid1>
taskset -p 0x8 <tid1>
```

NOTE

It is recommended to affine the VCPUs to the cores on which OVS threads are not running. For better performance VCPU threads should be given one physical CPU each if possible.

Run the `c` command from the QEMU CLI to continue the VM boot-up:

```
(qemu) c
```

9.2.5.4 Accessing virtual machine console

Telnet to the `IP_ADDR_BRD` at port `GUEST_CONSOLE_PORT` from any machine, which can reach `IP_ADDR_BRD` over network:

```
telnet  192.168.1.141 4446
Trying 192.168.1.141...
Connected to 192.168.1.141.
Escape character is '^]'.
[    0.000000] Booting Linux on physical CPU 0x0
[    0.000000] Initializing cgroup subsys cpuset
[    0.000000] Initializing cgroup subsys cpu
[    0.000000] Initializing cgroup subsys cpuacct
[    0.000000] Linux version 4.4.65 (root@dash1) (gcc version 5.4.0 20160609 (Ubuntu/Linaro
5.4.0-6ubuntu1~16.04.4) ) #1 SMP PREEMPT Fri Jun 23 07:34:43 IST 2017
```

Only a partial terminal output has been shown above.

9.2.5.5 Launching two virtual machines

This section describes steps for launching 2 virtual machine simultaenously for multiple VM use case.

NOTE

- Memory assigned to each virtual machine should not exceed the total number of huge pages assigned on system. In following example, 2048Mb to each virtual machine has been specified and verified to be working correctly.
- Console `telnet` port of both virtual machine must be different. In the below example, VM1 has port 4446 and VM2 has port 4447 configured for `telnet`. Modify the command accordingly if different values are required.

Launch VM1:

```
qemu-system-aarch64 -nographic -object memory-backend-file,id=mem,size=$VM_MEM,mem-path=/mnt/
hugepages,share=on -cpu host -machine type=virt -kernel /boot/Image -enable-kvm  -
```

```
serial tcp::4446,server,telnet -append 'root=/dev/vda rw console=ttyAMA0,115200 rootwait
earlyprintk' -m $VM_MEM -numa node,memdev=mem -chardev socket,id=char1,path=$VHOST1_PATH
-netdev type=vhost-user,id=hostnet1,chardev=char1,vhostforce,queues=$NUM_QUEUES -
device virtio-net-pci,disable-modern=false,addr=0x3,netdev=hostnet1,id=net1,mrg_rxbuf=off
-chardev socket,id=char2,path=$VHOST2_PATH -netdev type=vhost-
user,id=hostnet2,chardev=char2,vhostforce,queues=$NUM_QUEUES -device virtio-net-pci,disable-
modern=false,addr=0x4,netdev=hostnet2,id=net2,mrg_rxbuf=off -smp $VM_CORES -S -drive
if=none,file=$ROOTFS_IMG,id=foo,format=raw -device virtio-blk-device,drive=foo
```

Launch VM2:

```
qemu-system-aarch64 -nographic -object memory-backend-file,id=mem,size=$VM_MEM,mem-path=/mnt/
hugepages,share=on -cpu host -machine type=virt -kernel /boot/Image -enable-kvm  -
serial tcp::4447,server,telnet -append 'root=/dev/vda rw console=ttyAMA0,115200 rootwait
earlyprintk' -m $VM_MEM -numa node,memdev=mem -chardev socket,id=char1,path=$VHOST1_PATH
-netdev type=vhost-user,id=hostnet1,chardev=char1,vhostforce,queues=$NUM_QUEUES -
device virtio-net-pci,disable-modern=false,addr=0x3,netdev=hostnet1,id=net1,mrg_rxbuf=off
-chardev socket,id=char2,path=$VHOST2_PATH -netdev type=vhost-
user,id=hostnet2,chardev=char2,vhostforce,queues=$NUM_QUEUES -device virtio-net-pci,disable-
modern=false,addr=0x4,netdev=hostnet2,id=net2,mrg_rxbuf=off -smp $VM_CORES -S -drive
if=none,file=$ROOTFS_IMG,id=foo,format=raw -device virtio-blk-device,drive=foo
```

9.2.5.6 Running DPDK applications in VM

All the DPDK applications mentioned in this section have been tested in following configuration:

- Two Physical network interfaces.
- Two virtio-net devices in the virtual machine.

Following figure illustrates the test setup:

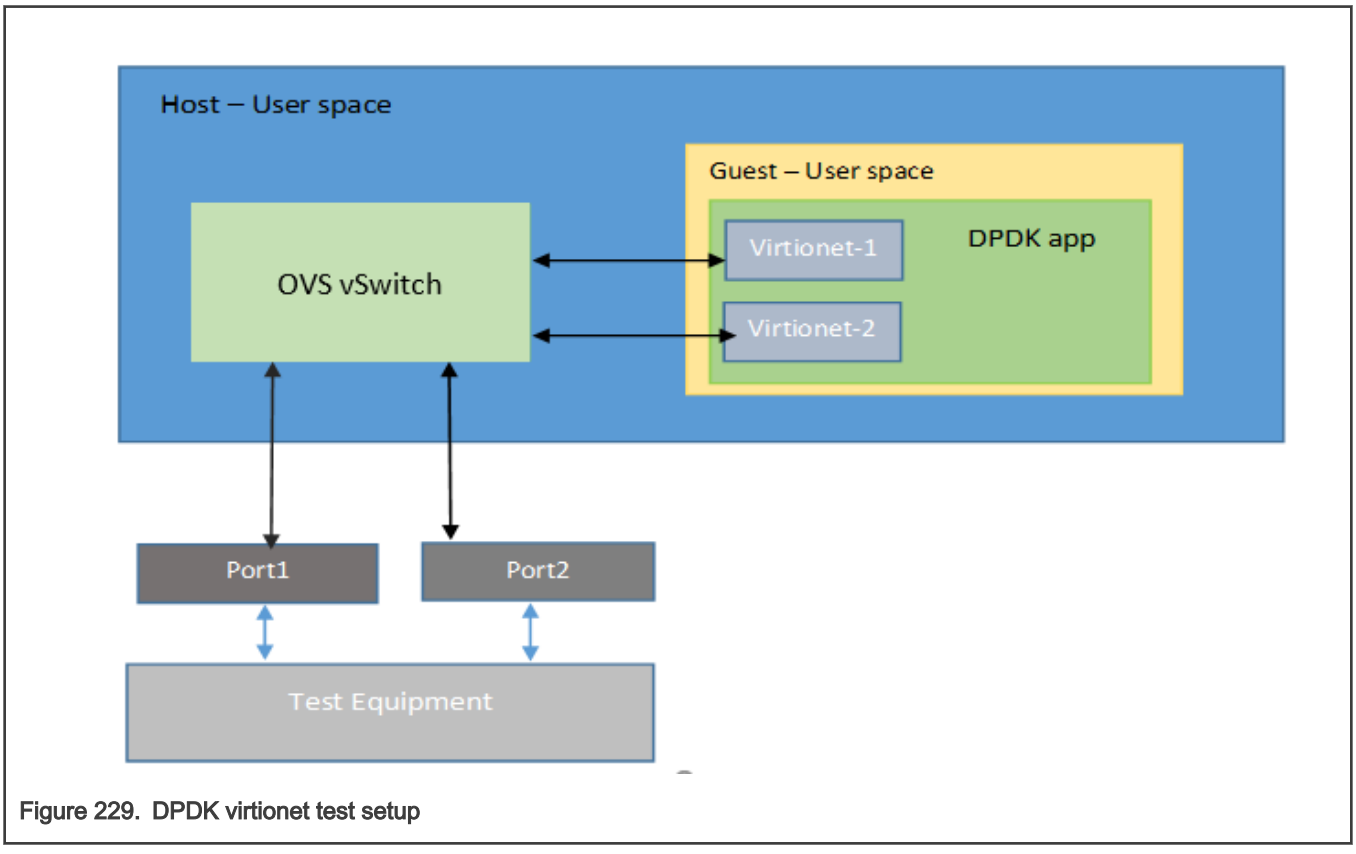

Figure 229. DPDK virtionet test setup

Generic Setup

DPDK example application binaries are available in the `/usr/local/bin` folder in the Flexbuild generated rootfs.

- Setup Hugepages

```
mkdir /dev/hugepages
mount -t hugetlbfs none /dev/hugepages
echo 512 > /proc/sys/vm/nr_hugepages ; for dpaa1 change change size as 256
```

NOTE

For the below commands, it is assumed that they are executed from `/usr/local` folder. Modify the commands for different path or `PATH` variable configuration.

- Setup the devices using DPDK Scripts

```
/usr/share/usertools/dpdk-devbind.py --status
/usr/share/usertools/dpdk-devbind.py -b uio_pci_generic 0000:00:03.0
/usr/share/usertools/dpdk-devbind.py -b uio_pci_generic 0000:00:04.0
```

Run DPDK Applications

NOTE

Using Core 0 for DPDK application can lead to non-deterministic behavior, including drop in performance. It is recommended that DPDK applicaton core mask values avoid using Core 0.

NOTE

`l3fwd` cannot work in VM with Virtio interfaces as offload mode for IP protocol is not supported by the DPDK Virtio driver

NOTE

VM virtio is only functionally enabled and the performance is not comparable to the performance that we get on host.

Executing `l2fwd` application:

```
bin/l2fwd -c 0x2 -n 1 -- -p 0x1 -q 1 -T 0
```

Executing `testpmd` application:

- For TX only:

```
./bin/testpmd -c 0x3 -n 1 -- -i --nb-cores=1  --portmask=0x1 --nb-ports=1 --forward-mode=txonly
--disable-hw-vlan --port-topology=chained
```

- For RX only:

```
./bin/testpmd -c 0x3 -n 1 -- -i --nb-cores=1  --portmask=0x1 --nb-ports=1 --forward-mode=rxonly
--disable-hw-vlan --port-topology=chained
```

9.2.5.7 Multi Queue VIRTIO support

To scale the performance against the number of VM cores, the VIRTIO devices need to be configured with multiple queues. This section explains the steps required for setup multi queue VIRTIO devices.

See **Generic Setup** of DPAA platform including configuration necessary for defining multiple queues before DPDK application is executed. No special setup is required for DPAA2 before DPDK application start. Further, refer Configuring OVS for

setting OVS-DPDK on the host. Steps defined below build upon the configurations and steps provided in these sections for multiqueue support.

QEMU commands for multiqueue vhost devices are different and are shown later in the section.

Additional steps for setup of OVS

Besides the steps mentioned in Configuring OVS, following changes are required to modify the number of supported queues in the virtual machine.

Run following commands after adding DPDK and vhost-user ports to the bridge:

```
./ovs-vsctl set Interface dpdk0 options:n_rxq=2
./ovs-vsctl set Interface dpdk1 options:n_rxq=2
./ovs-vsctl set Interface dpdk0 options:n_txq=2
./ovs-vsctl set Interface dpdk1 options:n_txq=2
./ovs-vsctl set Interface vhost-user1 options:n_rxq=2
./ovs-vsctl set Interface vhost-user2 options:n_rxq=2
./ovs-vsctl set Interface vhost-user1 options:n_txq=2
./ovs-vsctl set Interface vhost-user2 options:n_txq=2
```

Launch VM with multiqueue VHOST devices

Similar to the steps mentioned in Launch Virtual Machine, following steps are required to start the virtual machine. Changes are highlighted with **bold**:

NOTE

Command snippets shown below are valid for DPAA2 platform. Replace **dpaa2** with **dpaa** for equivalent command on DPAA platform.

```
export GUEST_CONSOLE_TELNET_PORT=4446
export VM_MEM=2048M     # For DPAA1 use VM_MEM=650M
export VM_CORES=2
```

```
export NUM_QUEUES=2
```

```
export ROOTFS_IMG=<VM_ROOTFS_IMG>
```

```
export VHOST1_PATH=/usr/local/var/run/openvswitch/vhost-user1
export VHOST2_PATH=/usr/local/var/run/openvswitch/vhost-user2
```

```
qemu-system-aarch64 -nographic -object memory-backend-file,id=mem,size=$VM_MEM,mem-path=/mnt/
hugepages,share=on -cpu host -machine type=virt -kernel /boot/Image -enable-kvm  -serial
tcp::$GUEST_CONSOLE_TELNET_PORT,server,telnet -append 'root=/dev/vda rw console=ttyAMA0,115200
rootwait earlyprintk' -m $VM_MEM -numa node,memdev=mem -chardev socket,id=char1,path=$VHOST1_PATH
-netdev type=vhost-user,id=hostnet1,chardev=char1,vhostforce,queues=$NUM_QUEUES -device
virtio-net-pci,disable-modern=false,addr=0x3,netdev=hostnet1,mq=on,id=net1,mrg_rxbuf=off,vectors=6
-chardev socket,id=char2,path=$VHOST2_PATH -netdev type=vhost-
user,id=hostnet2,chardev=char2,vhostforce,queues=$NUM_QUEUES -device virtio-net-pci,disable-
modern=false,addr=0x4,netdev=hostnet2,mq=on,id=net2,mrg_rxbuf=off,vectors=6 -smp $VM_CORES -S -drive
if=none,file=$ROOTFS_IMG,id=foo,format=raw -device virtio-blk-device,drive=foo
```

DPDK applications in VM

Connect to VM terminal as explained in Accessing virtual machine console. Once logged-in as Guest, DPDK applications using multiple queues can be run in VM.

NOTE

If the number of queues defined for DPDK application in VM is *not* equal to number of queues (`NUM_QUEUES`) defined in QEMU command, the application may fail to start.

NOTE

For the below commands, it is assumed that they are executed from `/usr/local` folder. Modify the commands for different path or `PATH` variable configuration.

Besides the above steps, all steps are same as described in single queue VM usecase.

Setup the devices using DPDK scripts:

```
/usr/share/usertools/dpdk-devbind.py --status
```

```
/usr/share/usertools/dpdk-devbind.py -b uio_pci_generic 0000:00:03.0
```

```
/usr/share/usertools/dpdk-devbind.py -b uio_pci_generic 0000:00:04.0
```

Execute `l3fwd` application:

```
./examples/l3fwd  -c 0x3 -n 1 --  -p 0x3 --config="(0,0,0),(0,1,0),(1,0,1),(1,1,1)"  -P --parse-ptype
```

Execute `testpmd` application:

```
./bin/testpmd -c 3 -n 1 -- -i --nb-cores=1 --nb-ports=1 --total-num-mbufs=1025 --forward-mode=txonly
--disable-hw-vlan --rxq=2 --txq=2 --port-topology=chained
```

9.2.5.8 OVS DPDK Performance Guide

OVS has a hierarchy of lookups. All the flows are initially added into the Openflow database (openflow block shown in below figure). When a flow is received its entries get populated into EMC/SMC/Megaflow.

OVS Flow Table hierarchy

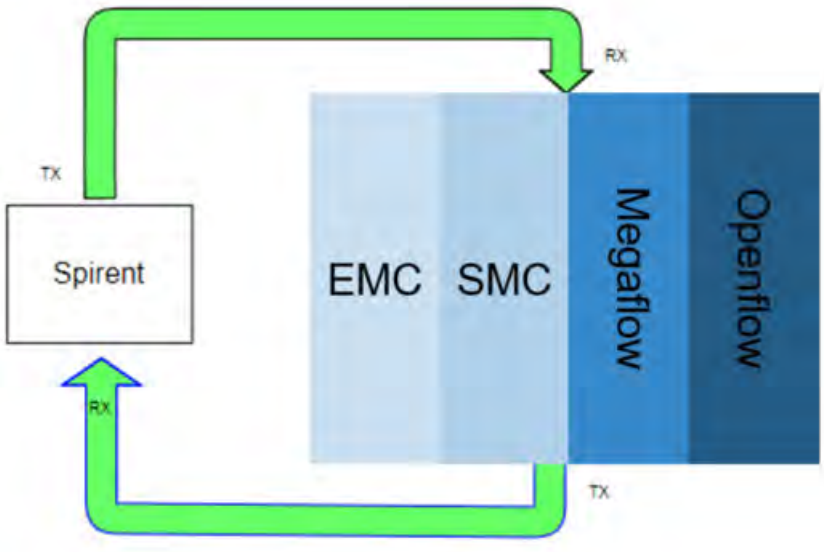

The exact-match cache (EMC) is the first and fastest mechanism Open vSwitch* (OVS) uses to determine what to do with an incoming packet. If the action for the packet cannot be found in the EMC, the search continues in the SMC cache followed by Megaflow classifier, and failing that the OpenFlow* flow tables are consulted. This can be thought of as similar to how a CPU checks increasingly slower levels of cache when accessing data.

By default EMC cache is enabled and SMC cache is disabled and both of them can be enabled or disabled via command line only

EMC cache can support up to max of 8K flows at a time, whereas SMC cache can support up to 100K entries.

Our recommendation w.r.t. flows for performance of OVS host cases:

- Use 256 flows for scenarios with 4 cores or less than 4 cores
- Use 2K flows for scenarios with more than 4 cores
- In case flows are more than 8K, disable EMC cache and enable SMC cache

To disable EMC cache and enable SMC cache:

```
ovs-vsctl --no-wait set Open_vSwitch . other_config:emc-insert-inv-prob=0
ovs-vsctl --no-wait set Open_vSwitch . other_config:smc-enable=true
```

To enable EMC cache and disable SMC cache:

```
ovs-vsctl --no-wait set Open_vSwitch . other_config:emc-insert-inv-prob=1
ovs-vsctl --no-wait set Open_vSwitch . other_config:smc-enable=false
```

It is also recommended to use per core memory pool using the below command:

```
ovs-vsctl set Open_vSwitch . other_config:per-port-memory=true
```

9.2.6 Enabling DPAA2 direct assignment for DPDK

The DPAA2 architecture supports the assignment of direct dpaa2 resource access from the QEMU guest VM (Kernel or userspace app). See **Direct assigned devices**.

This section describes necessary environment setup and commands for launching a Virtual Machine (VM) with VFIO device passthrough or direct device assignment support.

NOTE

Arm-V8 currently support VM to work in NO-IOMMU mode only. Which means that all HW access will use physical address mode only. The default sdk code is build with virtual addressing mode only. You will need to rebuild the the dpdk for `arm64-dpaa2-linuxapp-gcc`, by manually setting `CONFIG_RTE_LIBRTE_DPAA2_USE_PHYS_IOVA=y` in `config/defconfig_arm64-dpaa-linuxapp-gcc` and then build DPDK and example applications through standard compilation steps. `CONFIG_RTE_LIBRTE_DPAA2_USE_PHYS_IOVA=y` enables physical addressing mode (IOVA) which is required for direct assignment functionality.

Then follow the instructions in Standalone build of DPDK libraries and applications section to build DPDK applications.

You can transfer the applications manually to the virtual machine using the host-vm connections as suggested to configure in next section.

9.2.6.1 Launch Virtual Machine

1. Make sure that Kernel is enabled for direct assignment mode. See, Host kernel: Enabling DPAA2 direct assignment .
2. The default QEMU present in filesystem may not support the direct assignment feature. See, Building QEMU

Execute the following commands to build the QEMU 4.1 with VFIO passthrough support locally:

```
git clone https://source.codeaurora.org/external/qoriq/qoriq-components/qemu
cd qemu
git checkout qemu-4.1
git submodule update --init dtc
```

Make sure your m/c has the required packages to build QEMU. Refer the example below:

```
#update your ubuntu m/c with required packages.
apt-get install pkg-config
apt-get install libglib2.0-dev
apt-get install libpixman-1-dev
apt-get install libaio-dev
apt-get install libusb-1.0-0-dev
```

Now, build the QEMU

```
./configure --prefix=/root/qemu-4.1 --target-list=aarch64-softmmu --enable-fdt --enable-kvm
make
make install
```

The new QEMU will be installed in /root/qemu-4.1 folder.

3. Create DPAA2 resources for the VM guest kernel and VM guest userspace (dpdk) on the board.

   The dynamic scripts to support the dpaa2 resource creation are available in (/usr/local/dpdk/dpaa2) for LSDK rootfs. It is also part of the DPDK source code in `nxp` folder.

   ```
   export DPDK_SCRIPTS=/usr/local/dpdk/dpaa2
   ```

   Create a dpni based interface for file transfer and communication between host and VM guess kernel.

   ```
   ls-addni -n
   Output:---Created interface: eth0 (object:dpni.1, endpoint:)
   ```

   Next create the VM guest kernel container. See *How to use DPAA2 direct assignment* chapters for further information.

   A sample vm_linux conf file is provided in scripts to create the vm guest kernel container. In this, the number of resources are good for 2 core VM. The previously created dpni object is also passed to connect it with guest kernel container.

   ```
   source $DPDK_SCRIPTS/dynamic_dpl.sh -c $DPDK_SCRIPTS/vm_linux.conf <dpni.x>
       Where, <dpni.x> is dpni interface created by "ls-addni" command.
   ```

   Next step is to create the container for VM guest userspace for DPDK

   ```
   source $DPDK_SCRIPTS/dynamic_dpl.sh -c $DPDK_SCRIPTS/vm_dpdk.conf <dpmac.x> <dpmac.y>
       Where, <dpmac.x> & <dpmac.y> are required MAC interfaces.
   ```

   NOTE

   Make sure to enter the created parent DPRC into vm_dpdk.conf

   For the rest of the chapter, it is assumed that VM guest kernel container is dprc.2 and VM guest userspace child container is dprc.3 (nested).

Create an ethernet connect between host and VM for communication/transfer. This was already created and passed during vm-linux container.

```
#assign IP to host interface created to communicate with VM (dprc.2, eth0)
ifconfig eth0 192.168.2.2
```

4. Create hugepages mount

```
echo hugetlbfs /mnt/hugetlbfs hugetlbfs defaults,mode=0777 0 0 >> /etc/fstab
mkdir /mnt/hugetlbfs
mount /mnt/hugetlbfs
```

5. Launch qemu (Version: 4.1.0) using following command:

   For generating a root filesystem image, refer Creating a guest Linux root filesystem. Assign the `ROOTFS_IMG` in below command with the absolute path to the generated image.

```
export ROOTFS_IMG=/ubuntu_bionic_arm64_rootfs.ext4.img # Telnet port to be used for accessing
this instance of virtual machine export GUEST_CONSOLE_TELNET_PORT=4446
export KERNEL_IMG=/root/Image-4.14 export KERNEL_IMG=/root/Image-4.14
```

Define other environment variables which are used by the QEMU command to configure the virtual machine environment:

```
export VM_MEM=4096M(2048M for LS1088ARDB)
```

1. Add the device command below (for the GUEST KERNEL DPRC to be assigned) to the QEMU command line:

```
-device vfio-fsl-mc,host=dprc.2
```

   Also, make sure to specify the appropriate number of cores for the guest VM. It should match the number of dpio objects created in the child container. In our case, 1 core.

```
-smp $VM_CORES
```

2. Start QEMU with -S option (the vcpu threads are not yet started). We need this in order for the Ethernet drivers in the guest to correctly bind the objects to the cores.

```
# single core VM launch /root/qemu-4.1/bin/qemu-system-aarch64 -smp $VM_CORES -m
$VM_MEM -mem-path /mnt/hugetlbfs -cpu host -machine type=virt,gic-version=3 -kernel
$KERNEL_IMG -enable-kvm -display none -serial tcp::$GUEST_CONSOLE_TELNET_PORT,server,telnet
-drive if=none,file=$ROOTFS_IMG,id=foo,format=raw -device virtio-blk-device,drive=foo -append
'root=/dev/vda rw console=ttyAMA0 rootwait earlyprintk' -monitor stdio -device vfio-fsl-
mc,host=dprc.2 -S
```

   # Two core VM launch (check the isolcpus for core #1 in bootargs).

NOTE

- For best performance, Core 0 in the VM should not be used for DPDK I/O threads.
- To avoid system services from using GPUs scheduled for DPDK I/O threads, it is recommended that isolcpus be used for isolating cores from Linux Kernel scheduling in VM. The exact configuration is dependent on number of CPU assigned by QEMU to VM using the VM_CORES environment variable.

   Append isolcpus=1-$VM_CORES to the 'root=/dev/vda rw console=ttyAMA0,115200 rootwait earlyprintk' string in the qemu-system-aarch64 command given above.

```
/root/qemu-4.1/bin/qemu-system-aarch64 -smp $VM_CORES -m $VM_MEM -mem-path /mnt/hugetlbfs
-cpu host -machine type=virt,gic-version=3 -kernel $KERNEL_IMG -enable-kvm -display none
-serial tcp::$GUEST_CONSOLE_TELNET_PORT,server,telnet -drive
```

```
if=none,file=$ROOTFS_IMG,id=foo,format=raw -device virtio-blk-device,drive=foo -append
'root=/dev/vda rw console=ttyAMA0 rootwait earlyprintk isolcpus=1' -monitor stdio
-device vfio-fsl-mc,host=dprc.2 -S
```

NOTE

Make sure to specify the appropriate number of cores for the guest VM. It should match the number of dpio objects created in. Also, make sure that the /mnt/hugetlbfs folder exists and is mounted when starting QEMU.

Following logs will appear on the host UART console:

QEMU 4.1.0 monitor - type 'help' for more information

(qemu) qemu-system-aarch64: -serial tcp::4446,server,telnet: QEMU waiting for connection on: disconnected:telnet::4446,server

3. Launch VM using : telnet <Board ip addr> <GUEST_CONSOLE_TELNET_PORT> For example, telnet localhost 4446

   Make sure to assign each vcpu thread to one physical CPU only.

   Get the VM thread IDs entering QEMU shell.

```
(qemu) info cpus
* CPU #0: thread_id=7211
CPU #1: (halted) thread_id=7212
```

   Assign one vcpu thread to one core only. Also, apart from the first vcpu thread put all other threads in chrt priority for performance.

```
$ taskset -p 0x1 7211
pid 7211's current affinity mask: ff
pid 7211's new affinity mask: 1
$ taskset -p 0x2 7212
pid 7212's current affinity mask: ff
pid 7212's new affinity mask: 2
$ chrt -p 90 7212
```

   start the vcpu threads:

```
(qemu) c
```

9.2.6.2 Accessing the virtual machine console

```
root@ls2088ardb:~# telnet localhost 4446
Trying ::1...
Trying 127.0.0.1...
Connected to localhost.
Escape character is '^]'.
[    0.000000] Booting Linux on physical CPU 0x0
[    0.000000] Linux version 4.14.16-00004-ga5a4b5d (b10814@bf-netperf1.idc) (gcc version 7.2.1
20171011 (Linaro GCC 7.2-2017.11)) #2 SMP PREEMPT Tue Apr 3 12:24:09 IST 2018
[    0.000000] Boot CPU: AArch64 Processor [410fd082]
[    0.000000] Machine model: linux,dummy-virt
[    0.000000] efi: Getting EFI parameters from FDT:
[    0.000000] efi: UEFI not found.
[    0.000000] cma: Reserved 16 MiB at 0x00000000ff000000
[    0.000000] NUMA: No NUMA configuration found
----\
Ubuntu 16.04.3 LTS localhost ttyAMA0
localhost login: root
Password:
```

```
Last login: Wed May  2 20:08:32 UTC 2018 on ttyAMA0
Welcome to Ubuntu 16.04.3 LTS (GNU/Linux 4.14.16-00004-ga5a4b5d aarch64)
```

Only a partial terminal output has been shown above.

Use "root" as login & password

Execute the following commands:

```
echo 1000 > /proc/sys/vm/nr_hugepages
# child DPRC container for VM guest userspace
export DPRC=dprc.3
echo 1 > /sys/module/vfio/parameters/enable_unsafe_noiommu_mode
echo vfio-fsl-mc > /sys/bus/fsl-mc/devices/$DPRC/driver_override
echo $DPRC > /sys/bus/fsl-mc/drivers/vfio-fsl-mc/bind
```

The Host *core-index* which is used as First Physical core in VM should be used as *DPAA2_HOST_START_CPU* to run DPDK application. Where, *core-index* range is [0-7] for a 8 core platform.

E.g if you are running VM with two cores and Host core #4 and core #5 are given to VM, the first physical core for VM is core#4. So, we should set the Start CPU core as follows:

```
export DPAA2_HOST_START_CPU=4
```

Setup Hugepages

```
echo hugetlbfs /mnt/hugetlbfs hugetlbfs defaults,mode=0777 0 0 >> /etc/fstab
mkdir /mnt/hugetlbfs
mount /mnt/hugetlbfs
```

configure the host connection for SCP, ssh and file transfer

```
ifconfig eth1 192.168.2.1
```

9.2.6.3 Running DPDK applications with direct device assignments

All the DPAA2 based dpdk application will work in VM similar to the host.

If the dpdk example applications are not present, you can bring them via scp/tftp using eth1 interface.

NOTE

Using Core 0 for DPDK application can lead to non-deterministic behavior, including drop in performance. It is recommended that DPDK applicaton core mask values avoid using Core 0.

Refer some example test commands below:

```
#one core VM (core #0 for dpdk)
./l3fwd -c 0x1 -n 1 --log-level=bus.fslmc,8 -- -p 0x1 -P --config="(0,0,0)"
./l2fwd-crypto -c 0x1 -n 1 --log-level=bus.fslmc,8 -- -p 0x1 -q 1 --chain HASH_ONLY
--auth_algo sha2-256-hmac --auth_op GENERATE --auth_key_random_size 64
```

#two core VM (core #1 for DPDK)

```
./l3fwd -c 0x2 -n 1 -- -p 0x1 -P --config="(0,0,1)"
./l3fwd -c 0x2 -n 1 -- -p 0x3 -P --config="(0,0,1),(1,0,1)"
./testpmd -c 0x3 -n 1 -- -i --portmask=0x3 --nb-cores=1 --forward-mode=txonly
```

9.2.7 DPDK on Docker

9.2.7.1 Docker Overview

Docker provides an environment for a given image, over which any user space application can be executed. An image must contain/expose all the tools which are required to run any application.

For more information on Docker, see https://docs.docker.com/engine/userguide/.

9.2.7.2 DPAA1-Platform

9.2.7.2.1 Running Docker Container on DPAA1

To execute Docker, make sure you have completed the following prerequisites:

1. The Docker daemon must be running. If not, follow the instructions given at the link below to execute the daemon.

   https://docs.docker.com/engine/docker-overview/

2. The Docker tool must be installed, which will be working as the client to run the Docker container.

Download the required image, which should be run as an environment. Use the command below to get generic prebuilt images:

```
docker pull ubuntu:latest  # Command template is 'docker pull <distribution>:<tag>'
```

All downloaded images can be verified using the command below:

```
docker images
```

Once images are downloaded, the Docker container can be started using the steps below. Below commands will execute a docker container named as **docker0**:

```
docker run --privileged --interactive --env LD_LIBRARY_PATH=/usr/local/lib --name=docker0 --
hostname=docker0 --detach --volume=/usr:/usr --volume=/sys:/sys --volume=/dev:/dev ubuntu:latest
```

Arguments provided to the command above have been explained below:

```
--privileged  # It provides privilege to docker container to access host completely
--interactive  # Docker container will be running state
--env LD_LIBRARY_PATH=/usr/local/lib  # Exporting host environment variable to docker container*/
--name=docker0 --hostname=docker0 # User defined name to docker container
--detach # container will be detached once it is launched and host prompt will be available for use
--volume=/XXX:/YYY # Exporting host partitions /XXX to docker container's mount point /YYY
```

Finally, following command attaches to the docker console which was run in previous command:

```
docker exec -it docker0 bash
```

9.2.7.2.2 Running the DPDK Application

Once Docker is launched and connected, then execute the DPDK application by running the respective command. The command below is a sample to run DPDK `l3fwd`:

```
export DPAA_FMCLESS_MODE=1
l3fwd -c 0x0C -n 1 – -p 0x30 --config="(4,0,2),(5,0,3)" -P
```

9.2.7.3 DPAA2-Platform

9.2.7.3.1 Traffic Multiplexer/De-Multiplexer

On the DPAA2 architecture, the MC provides various methods by which incoming traffic can be split of over the multiple DPNIs. The sections below provide more information.

Using DPDMUX

MC provides an object (DPDMUX) which splits incoming traffic over the multiple DPNIs based on following parameters:

1. MAC based classification
2. VLAN based classification
3. MAC + VLAN base classification
4. User defined key based classification.

DPDMUX has its own filter table which consists of default filtering rules. Default filtering rules are a combination of MAC address configured on DPNI and port information as a destination. Once the DPDMUX object is connected to a given DPNI, then the entry for a particular DPNI will be added to the filtering table. All incoming default traffic will be distributed based on the destination MAC address in the packet. The user may add more entries to the filtering table as per his/her requirement.

The diagram below shows a sample use case for DPDMUX and associated links for a single DPMAC object. It can be extended up-to a maximum number of DPMACs, each having its own DPDMUX object.

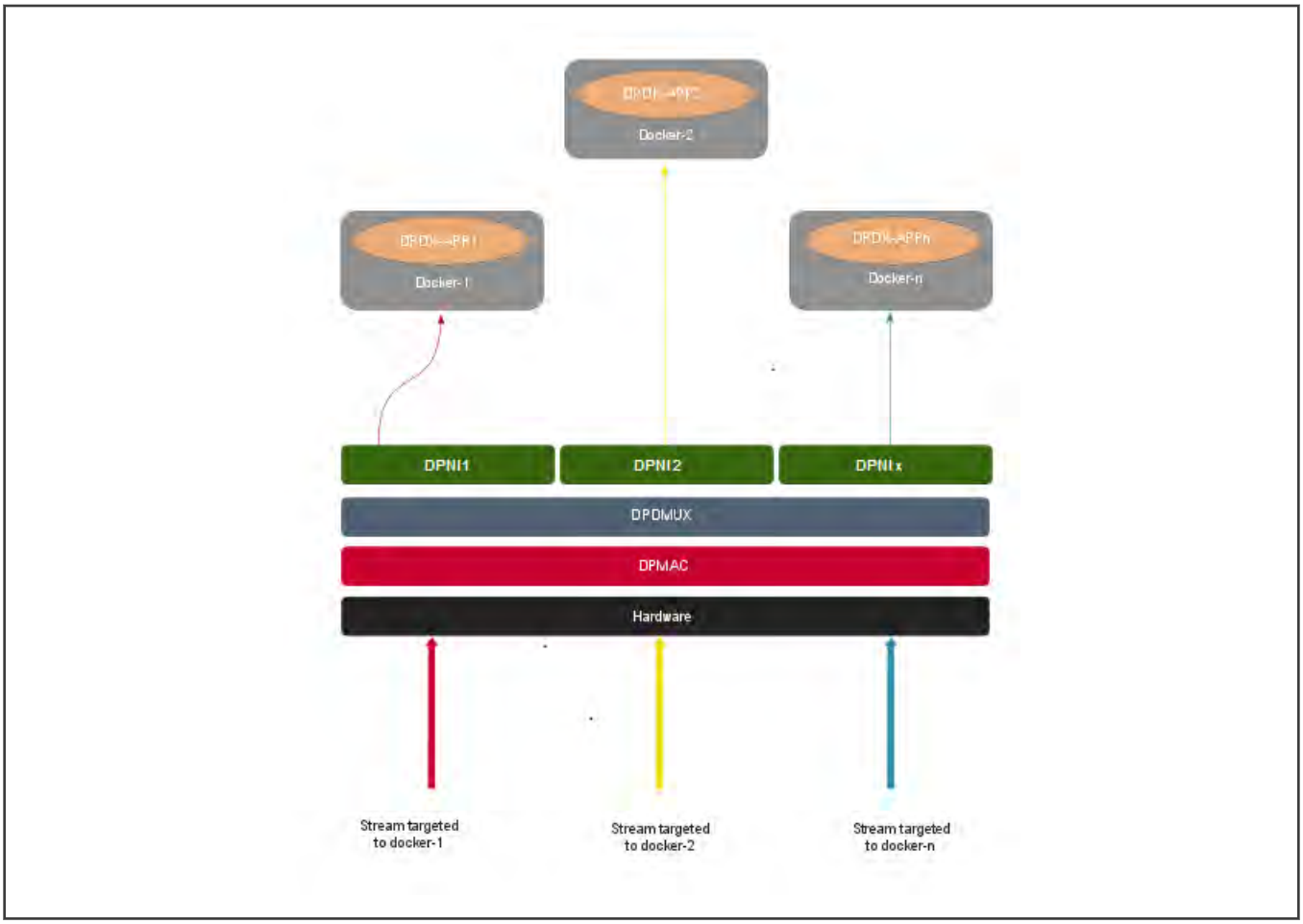

Using DPSW

MC also provides another object(DPSW) which internally implements DPAA2 H/W Switch. This Switch instance can also be used for traffic forwarding to multiple hosts. On LS2088 there is only once instance of DPSW that can be created and required ports will be connected to the same DPSW instance.

DPSW has its own filter table which populates dynamically with source MAC address and port which packet is received on. Default incoming traffic will be flooded to all ports except ingress port and filtering rules will be learnt into filtering table. After learning, same packet will be forwarded to the destined port only.

Below diagram shows a sample use case for DPSW and associated links for single DPMAC object. It can be extended up-to maximum number of DPMACs with same DPSW instance.

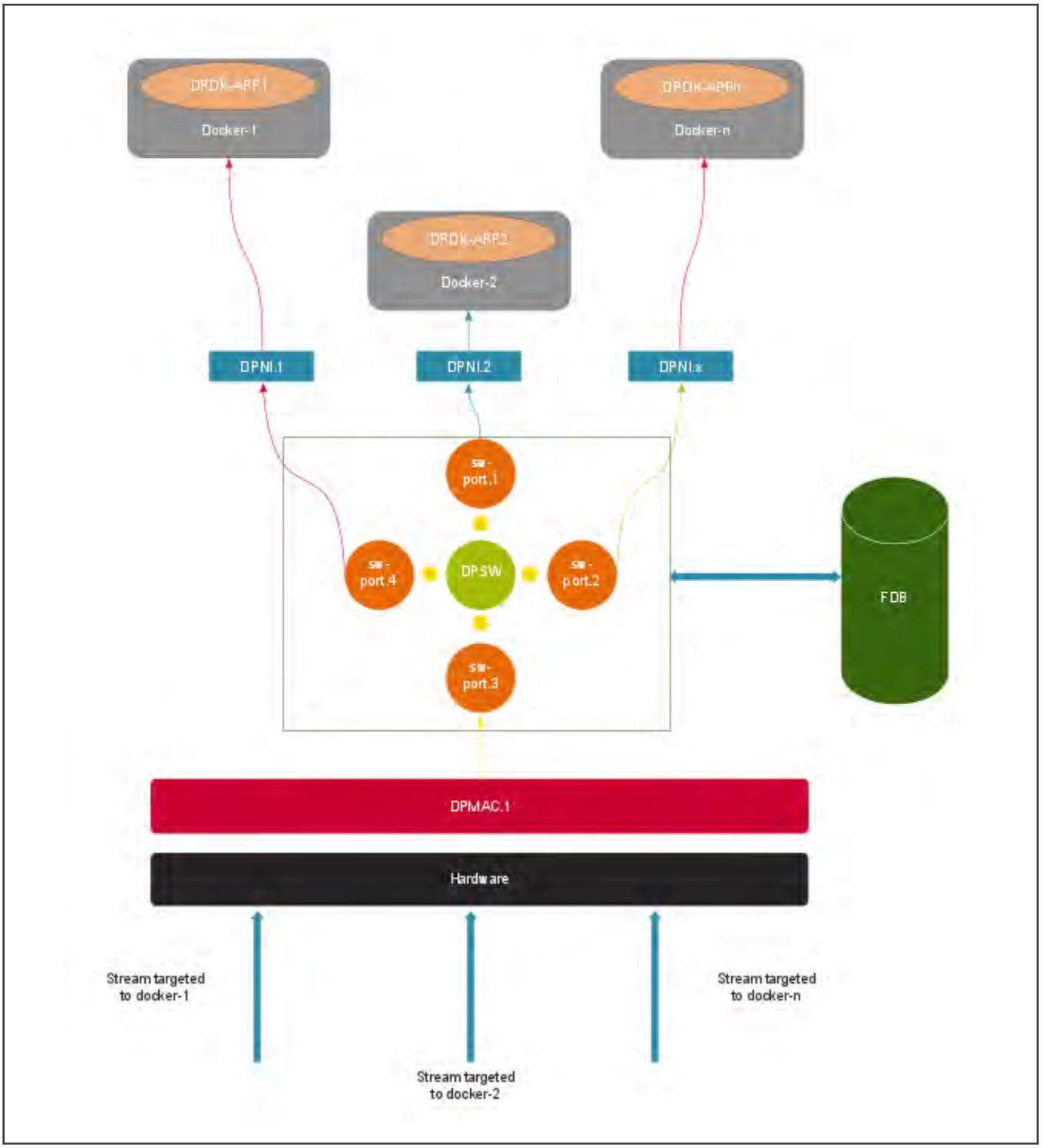

9.2.7.3.2 Single Docker Instance - Container Configuration (DPDMUX/DPSW)

For each Docker instance, a DPRC needs to be created containing DPAA2 hardware blocks necessary for the Docker container.

A helper script `dynamic_dpl.sh`, part of the LSDK rootfs, can be used for creating such DPRC. For example, following command snippet creates a DPRC containing 8 DPNI objects (logical network interfaces) which are not backed by any physical link (DPMAC) and have MAC addresses starting from `00:00:00:00:05:00`. For more details about creating DPRC, refer Creating DPRCs

Set the following environment variable which would be used by the `dynamic_dpl.sh` script:

```
export MAX_QOS=16
export DPNI_NORMAL_BUF=1 # This is optional
```

Execute the `dynamic_dpl.sh` script:

```
/usr/local/dpdk/dpaa2/dynamic_dpl.sh dpni dpni dpni dpni dpni dpni dpni dpni -b 00:00:00:00:05:00
```

The output of the above command would be similar to:

```
##################### Container  dprc.2  is created ####################

Container dprc.2 have following resources :=>

 * 16 DPBP
 * 8 DPCON
 * 8 DPSECI
 * 8 DPNI
 * 10 DPIO
 * 2 DPCI

 ######################### Configured Interfaces #########################

Interface Name        Endpoint              Mac Address
==============        ========              ==================
dpni.1                UNCONNECTED           00:00:00:00:05:01
dpni.2                UNCONNECTED           00:00:00:00:05:02
dpni.3                UNCONNECTED           00:00:00:00:05:03
dpni.4                UNCONNECTED           00:00:00:00:05:04
dpni.5                UNCONNECTED           00:00:00:00:05:05
dpni.6                UNCONNECTED           00:00:00:00:05:06
dpni.7                UNCONNECTED           00:00:00:00:05:07
dpni.8                UNCONNECTED           00:00:00:00:05:08
```

Each such DPRC would be assigned to a Docker container. Thus, multiple such DPRC would have to be created as per the use-case and Docker instances required for it.

NOTE

Resouces available on a DPAA2 system are limited and assigning them to DPRC can result error if requested resources are not available. For the above script output, if the script doesn't return any error and all the DPNIs have different MAC addresses, result can be considered success. In case of error or failure to assign MAC addresses, resource assignment to the DPRCs need to be restructured.

Hereafter, based on whether DPDMUX or DPSW is being used, one of the below configuration is applicable:

Configuration using DPDMUX

Create DPDMUX objects with total number of required links i.e. downlinks and uplinks both. Here dpdmux.0 object is created

```
restool dpdmux create --num-ifs=3 --method DPDMUX_METHOD_MAC --max-dmat-entries=8 --max-mc-groups=8 --
manip=DPDMUX_MANIP_NONE
```

Connecting downlinks and uplinks with above created DPDMUX:

```
restool dprc connect dprc.1 --endpoint1=dpmac.x --endpoint2=dpdmux.0.0
restool dprc connect dprc.1 --endpoint1=dpni.y --endpoint2=dpdmux.0.1
restool dprc connect dprc.1 --endpoint1=dpni.z --endpoint2=dpdmux.0.2
```

Where, `x`, `y` and `z` are object indices created in resource containers.

Configuration using DPSW

Create DPSW object with total number of required links i.e. downlinks and uplinks both. Here dpsw.0 object is created:

```
restool dpsw create --num-ifs=3
```

Connecting downlinks and uplinks with above created DPSW:

```
restool dprc connect dprc.1 --endpoint1=dpmac.x --endpoint2=dpsw.0.0
restool dprc connect dprc.1 --endpoint1=dpni.y --endpoint2=dpsw.0.1
restool dprc connect dprc.1 --endpoint1=dpni.z --endpoint2=dpsw.0.2
```

Where, `x`, `y` and `z` are object indices created in resource containers.

9.2.7.3.3 Running Docker Container on DPAA2

Based on the explanation provided in the Running Docker Container on DPAA1, the command would be:

```
docker pull ubuntu:latest
export DPRC="dprc.<index>"
export VFIO_NO=`readlink /sys/bus/fsl-mc/devices/$DPRC/iommu_group | xargs basename`
docker run --privileged --interactive --env DPRC=$DPRC --device=/dev/vfio/vfio:/dev/vfio/vfio --
device=/dev/vfio/$VFIO_NO:/dev/vfio/$VFIO_NO --name=docker0 --hostname=docker0 --detach --volume=/
usr:/usr --volume=/sys:/sys --volume=/dev:/dev ubuntu:latest
docker exec -it docker0 bash
```

In the above, following is the explanation for arguments not applicable for DPAA:

```
export DPRC="dprc.<index>" # Where <index> is the DPRC container number created by
dynamic_dpl.sh execution
```

```
--device=/XXX:/YYY # Exporting host device /XXX to docker container device /YYY
```

9.2.7.3.4 Running the DPDK Application

Once Docker is launched and connected, then execute the DPDK application by running the respective command. The command below is a sample to run DPDK `l3fwd`:

```
l3fwd -c 0xFF -n 4 -- -p 0xFF -P --config="(0,0,0),(1,0,1),(2,0,2),(3,0,3),(4,0,4),(5,0,5),(6,0,6),
(7,0,7)" -P
```

9.2.7.3.5 Example Configuration for 2 Docker Instances: Using DPDMUX

Common Container settings:

```
export MAX_QOS=8
export DPNI_NORMAL_BUF=1
```

Create container for docker0:

```
./dynamic_dpl.sh dpni dpni dpni dpni dpni dpni dpni dpni -b 00:00:00:00:05:00

##################### Container  dprc.2  is created ####################

Container dprc.2 have following resources :=>
```

```
 * 16 DPBP
 * 8 DPCON
 * 8 DPSECI
 * 8 DPNI
 * 10 DPIO
 * 2 DPCI
######################### Configured Interfaces #########################

Interface Name        Endpoint              Mac Address
==============        ========              ==================
dpni.1                UNCONNECTED           00:00:00:00:05:01
dpni.2                UNCONNECTED           00:00:00:00:05:02
dpni.3                UNCONNECTED           00:00:00:00:05:03
dpni.4                UNCONNECTED           00:00:00:00:05:04
dpni.5                UNCONNECTED           00:00:00:00:05:05
dpni.6                UNCONNECTED           00:00:00:00:05:06
dpni.7                UNCONNECTED           00:00:00:00:05:07
dpni.8                UNCONNECTED           00:00:00:00:05:08
```

Create container for docker1:

```
./dynamic_dpl.sh dpni dpni dpni dpni dpni dpni dpni dpni -b 00:00:00:00:05:08

#################### Container  dprc.3  is created ####################

Container dprc.3 have following resources :=>
 * 16 DPBP
 * 8 DPCON
 * 8 DPSECI
 * 8 DPNI
 * 10 DPIO
 * 2 DPCI
######################### Configured Interfaces #########################
Interface Name        Endpoint              Mac Address
==============        ========              ==================
dpni.9                UNCONNECTED           00:00:00:00:05:09
dpni.10               UNCONNECTED           00:00:00:00:05:0a
dpni.11               UNCONNECTED           00:00:00:00:05:0b
dpni.12               UNCONNECTED           00:00:00:00:05:0c
dpni.13               UNCONNECTED           00:00:00:00:05:0d
dpni.14               UNCONNECTED           00:00:00:00:05:0e
dpni.15               UNCONNECTED           00:00:00:00:05:0f
dpni.16               UNCONNECTED           00:00:00:00:05:10
```

Create DPDMUX objects with downlinks and uplinks

```
restool dpdmux create --num-ifs=2 --method DPDMUX_METHOD_MAC --max-dmat-entries=8 --max-mc-groups=8 --
manip=DPDMUX_MANIP_NONE
restool dpdmux create --num-ifs=2 --method DPDMUX_METHOD_MAC --max-dmat-entries=8 --max-mc-groups=8 --
manip=DPDMUX_MANIP_NONE
restool dpdmux create --num-ifs=2 --method DPDMUX_METHOD_MAC --max-dmat-entries=8 --max-mc-groups=8 --
manip=DPDMUX_MANIP_NONE
restool dpdmux create --num-ifs=2 --method DPDMUX_METHOD_MAC --max-dmat-entries=8 --max-mc-groups=8 --
manip=DPDMUX_MANIP_NONE
```

Create uplink connections

```
restool dprc connect dprc.1 --endpoint1=dpdmux.0.0 --endpoint2=dpmac.1
restool dprc connect dprc.1 --endpoint1=dpdmux.1.0 --endpoint2=dpmac.2
```

```
restool dprc connect dprc.1 --endpoint1=dpdmux.2.0 --endpoint2=dpmac.3
restool dprc connect dprc.1 --endpoint1=dpdmux.3.0 --endpoint2=dpmac.4
```

Create downlink connections for docker0

```
restool dprc connect dprc.1 --endpoint1=dpni.1 --endpoint2=dpdmux.0.1
restool dprc connect dprc.1 --endpoint1=dpni.2 --endpoint2=dpdmux.1.1
restool dprc connect dprc.1 --endpoint1=dpni.3 --endpoint2=dpdmux.2.1
restool dprc connect dprc.1 --endpoint1=dpni.4 --endpoint2=dpdmux.3.1
```

Create downlink connections for docker1

```
restool dprc connect dprc.1 --endpoint1=dpni.5 --endpoint2=dpdmux.0.2
restool dprc connect dprc.1 --endpoint1=dpni.6 --endpoint2=dpdmux.1.2
restool dprc connect dprc.1 --endpoint1=dpni.7 --endpoint2=dpdmux.2.2
restool dprc connect dprc.1 --endpoint1=dpni.8 --endpoint2=dpdmux.3.2
```

NOTE

The above commands are for 1G test. In case 10G port is to be used append the above commands to create uplink and downlink with `--committed-rate=10000 --max-rate=10000`.

Running DPDK L2fwd on docker0

```
export DPRC="dprc.2"
export VFIO_NO=`readlink /sys/bus/fsl-mc/devices/$DPRC/iommu_group | xargs basename`
docker run --privileged --interactive --env DPRC=$DPRC --env LD_LIBRARY_PATH=/usr/local/lib --
device=/dev/vfio/vfio:/dev/vfio/vfio --device=/dev/vfio/$VFIO_NO:/dev/vfio/$VFIO_NO --name=docker0 --
hostname=docker0 --detach --volume=/usr:/usr --volume=/sys:/sys --volume=/dev:/dev ubuntu:latest
docker exec -it docker0 bash
l2fwd -c 0xF0 -n 1 --file-prefix=docker0 --socket-mem=2048 -- -p 0x0F -q 1
```

Running DPDK L2fwd on docker1

```
export DPRC="dprc.3"
export VFIO_NO=`readlink /sys/bus/fsl-mc/devices/$DPRC/iommu_group | xargs basename`
docker run --privileged --interactive --env DPRC=$DPRC --env LD_LIBRARY_PATH=/usr/local/lib --
device=/dev/vfio/vfio:/dev/vfio/vfio --device=/dev/vfio/$VFIO_NO:/dev/vfio/$VFIO_NO --name=docker1 --
hostname=docker1 --detach --volume=/usr:/usr --volume=/sys:/sys --volume=/dev:/dev ubuntu:latest
docker exec -it docker1 bash
l2fwd -c 0xF0 -n 1 --file-prefix=docker1 --socket-mem=2048 -- -p 0x0F -q 1
```

NOTE

The above set of commands are for reference on LS2088A. On LS1088 DPDMUX object supports upto 4 downlinks (dpni's). These can be assigned to a docker instance as per requirement. For example, one usecase would assign two dpni's in each of the two docker container instances however other usecase would be to assign one dpni to each of four docker instances.

9.2.7.3.6 Example Configuration for 2 Docker Instances: Using DPSW

Common Container settings:

```
export MAX_QOS=8
export DPNI_NORMAL_BUF=1
```

Create container for docker0:

```
./dynamic_dpl.sh dpni -b 00:00:00:00:05:00

#################### Container  dprc.2  is created ####################

Container dprc.2 have following resources :=>
 * 16 DPBP
 * 8 DPCON
 * 8 DPSECI
 * 1 DPNI
 * 10 DPIO
 * 2 DPCI


######################### Configured Interfaces #########################

Interface Name        Endpoint              Mac Address
==============        ========              ==================
dpni.1                UNCONNECTED           00:00:00:00:05:01
```

Create container for docker1:

```
./dynamic_dpl.sh dpni -b 00:00:00:00:05:01

#################### Container  dprc.3  is created ####################

Container dprc.3 have following resources :=>

 * 16 DPBP
 * 8 DPCON
 * 8 DPSECI
 * 1 DPNI
 * 10 DPIO
 * 2 DPCI


######################### Configured Interfaces #########################

Interface Name        Endpoint              Mac Address
==============        ========              ==================
dpni.2                UNCONNECTED           00:00:00:00:05:02
```

Create DPSW objects

```
restool dpsw create --num-ifs=3
restool dprc connect dprc.1 --endpoint1=dpsw.0.0 --endpoint2=dpmac.1
```

Create downlink connections for docker0

```
restool dprc connect dprc.1 --endpoint1=dpni.1 --endpoint2=dpsw.0.1
```

Create downlink connections for docker1

```
restool dprc connect dprc.1 --endpoint1=dpni.2 --endpoint2=dpsw.0.2
```

Running DPDK L2fwd on docker0

```
export DPRC="dprc.2"
export VFIO_NO=`readlink /sys/bus/fsl-mc/devices/$DPRC/iommu_group | xargs basename`

docker run --privileged --interactive --env DPRC=$DPRC --env LD_LIBRARY_PATH=/usr/local/lib --
device=/dev/vfio/vfio:/dev/vfio/vfio --device=/dev/vfio/$VFIO_NO:/dev/vfio/$VFIO_NO --name=docker0 --
hostname=docker0 --detach --volume=/usr:/usr --volume=/sys:/sys --volume=/dev:/dev ubuntu:18.04

docker exec -it docker0 bash

cd /usr/local/bin
./l2fwd -c 0x04 -n 1 --file-prefix=docker0 --socket-mem=2048 -- -p 0x01 -q 1
```

Running DPDK L2fwd on docker1

```
export DPRC="dprc.3"
export VFIO_NO=`readlink /sys/bus/fsl-mc/devices/$DPRC/iommu_group | xargs basename`


docker run --privileged --interactive --env DPRC=$DPRC --env LD_LIBRARY_PATH=/usr/local/lib --
device=/dev/vfio/vfio:/dev/vfio/vfio --device=/dev/vfio/$VFIO_NO:/dev/vfio/$VFIO_NO --name=docker1 --
hostname=docker1 --detach --volume=/usr:/usr --volume=/sys:/sys --volume=/dev:/dev ubuntu:18.04

docker exec -it docker1 bash

cd /usr/local/bin
./l2fwd -c 0x08 -n 1 --file-prefix=docker1 --socket-mem=2048 -- -p 0x01 -q 1
```

NOTE

The above commands are for LS2088A only as LS1088A doesn't support DPSW object.

9.2.8 Known Limitations and Future Work

Generic Limitations:

1. Currently only DPDK eal framework threads are supported for packet I/O. The threads created by other methods (e.g. pthread_create) may not work. The DPAAx hardware internally uses the hardware access portals for each thread doing packet I/O, this information is currently automatically assigned in thread local variable when using DPDK thread framework.

   Additionally, the number of maximum I/O thread using DPDK are limited to number of HW portals available. The number of available portals is platform dependent.

2. Not all functionalities supported by DPDK framework have been implemented by PPFE, ENETC, DPAA and DPAA2 drivers (PMDs). For list of supported features, refer PPFE: Supported DPDK Features, ENETC supported DPDK features, DPAA: Supported DPDK Features and DPAA2: Supported DPDK Features.

3. Using Core 0 for I/O related work is known to impact performance - whether on host or in VM. Disabling services or RT prioritization can result in optimal performance but the results are non-deterministic. Affining Core 0 to I/O should be avoided as much as possible.

4. It has been observed that PCI NIC card events can lead to performance drop on certain platforms. The behavior is non-deterministic across platforms. For peak performance numbers, PCI NIC cards should be disabled.

5. DPDK docker support is currently only available for DPAA2 and DPAA platforms.

6. DPDK multiprocess mode (i.e. using DPDK secondary processes) is not supported on DPAA1.

7. LS1088A platform have limited CTLU features. This limits the device hardware classification capabilities leading to reduced number of field combinations for flow matching/classification.

DPAA2 Specific Limitations:

1. IPSec Direct assignment performance doesn't scale beyond 4 cores.

DPAA Specific Limitations:

1. Ports assigned to user space cannot be assigned dynamically to kernel space or vice versa.
2. Default configuration for DPAA platform is to expect execution of FMC tools (see manual) before application can be run. This adds a constraint on number of queues which would be initialized by application to be exactly same as the queues which are configured by the FMC tool. In case, incorrect number of queues are used (lesser than configured by FMC tool), RSS distribution can cause loss of packets or no I/O.
3. On LS1043ARDB platform, performance may be lower in case of 6G setup as compared to 10G setup.

PPFE (LS1012) Specific Limitations:

1. While using PPFE in user space, if the kernel mode PFE module is loaded before using the user space mode, the HIF rings do not get cleaned sometimes and user need to restart the application again till the rings are cleaned.
2. Multiple buffer pools are not supported.
3. User defined Rx/Tx queue configuration is not supported. Driver configures queue with default attributes only.

ENETC(LS1028) Specific Limitations:

1. Link Negotiation and Link status update are not supported
2. Switch port should be connected and link should be up before booting linux.

9.2.9 Troubleshooting

Following are some common steps and suggestions outlined for best performance from DPDK Applications:

1. To obtain best performance, please ensure that the boot-up time command line arguments are similar to below:

   For DPAA2:

   ```
   console=ttyS1,115200 root=/dev/mmcblk0p3 earlycon=uart8250,mmio,0x21c0600
   default_hugepagesz=1024m hugepagesz=1024m hugepages=8 isolcpus=1-7
   iommu.passthrough=1 rcupdate.rcu_cpu_stall_suppress=1
   ```

   NOTE

   In the above, change the `isolcpus` as required based on the cores which would be used by DPDK applications.

   For DPAA:

   ```
   console=ttyS0,115200 root=/dev/mmcblk0p3 earlycon=uart8250,mmio,0x21c0500 default_hugepagesz=2m
   hugepagesz=2m hugepages=512 isolcpus=1-3 bportals=s0 qportals=s0
   iommu.passthrough=1 rcupdate.rcu_cpu_stall_suppress=1
   ```

   `isolcpus` in the above ensures that only Linux Kernel schedules its threads on Core 0 only. Core 1-x would be used for DPDK application threads.

   Hugepage count defined by `hugepages` should also be modified to maximum possible so as to allow DPDK applications to have larger buffers.

   NOTE

   The value of hugepages is dependent on the size of RAM available on the board. Value should be selected based on specific use-case as any memory allocated for hugepage is not usable for Linux Kernel OS operations.

2. If there is issue with reception of transmission of packets, verify the following points:

a. Ensure that no error has been reported by DPDK application at startup. Generally the output is descriptive enough for cause of problem.

b. Check the mapping of ports against the physical ports:

- In case of DPAA platform, ensure that the mapping of physical interfaces with DPDK ports is correct. Refer LS1043ARDB Port Layout or LS1046ARDB Port Layout.
- In case of DPAA2 platform, ensure that correct `dpni.X` has been used in the `dynamic_dpl.sh` script while creating the `dprc` containers. A common pitfall is to use an incorrect `dpni` as against the physical port being used for IO.

c. Ensure that traffic generator to board connectivity is proper. You may run `testpmd` in `tx_only` mode to validate if the packets are going out on specific interfaces. For information about `testpmd` application and its supported arguments, refer the web documentation.

d. Ensure that the traffic generator stream settings are correct and enough streams are being generated for proper distribution between DPDK application cores.

e. Ensure that the MAC address of stream generated by traffic generator matches that of the `dpni` port, or the interface is in promiscous mode.

3. If the performance is not as expected:

a. Ensure that the stream configuration of the traffic generator is approrpriate and that it can generate multiple streams. In case the streams have all same IP destination and/or source, the distribution of traffic across multiple cores wouldn't happen.

NOTE

For obtaining best performance, it is important to configure the number of streams from packet generator adequately. If the number of streams generated by packet generator are not adequate, it would lead to improper distribution across the queues defined (especially in case of multiple queue setup) and eventually lack of performance.

b. Using standard process tools in Linux, for example `ps`, `top`, verify that all the DPDK application threads have been started (as per application configuration on command line) and busy looping.

c. For DPAA2, in case any DPAA2 ports are assigned to Linux kernel, assure that the interrupt affinity is not on any core which is assiged to DPDK. See the DPDK Performance Reproducibility Guide for details about how to check and affine cores to such interrupts.

4. For DPAA2 Platform certain tuning parameters are available. User can enable them according to the requirements.

- To offload the RX error packet drop (parsing error) handling in hardware. Set,

```
#export DPAA2_PARSE_ERR_DROP=1
```

- To disable the TX congestion control - i.e. infinite size of TX queues, set:

```
#export DPAA2_TX_CGR_OFF=1
```

- To configure the TQ queue congestion control - taildrop size in byte (default is 64K bytes), set:

```
#export DPAA2_TX_TAILDROP_SIZE=<size>
```

5. System tuning parameters can be checked with "debug_dump.sh" script located in "/usr/local/dpdk" directory. You can share the output with support team for further analysis.

6. DPAA2 port status can be checked from restool commands. (e.g. `restool dpni info dpni.1`)

7. DPAA2 - When using large number of buffers (> 1 Million), the application may get hang. This is due to maximum limit of number of buffers configured by default for DPAA2 QBMAN. It is a configurable setting in DPC file. To configure number of buffers, following node needs to be added or modified with the correct number of buffers.

```
{
    qbman  {
        ....
        total_bman_buffers=<number of buffers in HEX>;
     };
};
```

9.2.10 DPDK Performance Reproducibility Guide

This chapter describes various cases and points which are important for obtaining best performance from DPDK software on the NXP platforms. This is a suggestive list of best practices and optimal configurations which can help extract maximum performance of the NXP DPAA hardware.

NOTE

The practices mentioned in this chapter are based on tests in controlled environment. These are not intended for production or deployment without adequate analysis of the impact on use-cases.

This document is divided into two broad sections: Steps required before booting up the Linux Kernel and steps required before DPDK application execution.

Before booting up Linux

1. Use GCC toolchain 7.4.1 as recommended toolchain for compiling DPDK.
2. On kernel 5.4 and above, CONFIG_QORIQ_THERMAL flag is enabled by default which tracks temperature of the SOC. In some cases like LS1043, the temperature may go up while running DPDK application which are CPU intensive and the maximum CPU frequency is clamped to a lower value. This may result in lower performance numbers. To disable this feature CONFIG_QORIQ_THERMAL flag should be disabled while compiling kernel Image.
3. **Choosing Optimal Board Support Packages (BSP)**
   - Choosing a compatible board support package is critical for functionality as well as performance of DPDK application.

     For DPAA and DPAA2 platforms, select the top frequency RCW/PBL binaries stably supported by boards. For example, for LS2088ARDB DPAA2, Rev 1.1 boards with frequency of **2100x800x2133** is known to perform best. Other frequency, though stable, would result in slower performance. Below table describes an indicative set of known BSP files for DPDK supported SoC.
4. **Disabling hardware prefetching through U-Boot**
   - For LS2088A DPAA2 platform, it is possible to disable hardware prefetching through U-Boot. This can enhance performance in multicore scenario.
   - For disabling hardware prefetching, following command should be used on U-Boot prompt:

     ```
     setenv hwconfig 'fsl_ddr:bank_intlv=auto;core_prefetch:disable=0xFE'
     ```

     NOTE

     Please change the `disable=` parameter based on the platform being used. For example, for LS1046/LS1043, having 4 cores, use `disable=0xE`, and for LX2 having 16 cores, use `disable=0xFFFE`.

     After executing the above command, board bank needs to be reset for the setting to take place. In the above command, field `disable=0xFE` defines the mask for disabling prefetching on specific cores. For example, for disabling prefetching on 3rd and 4th core, use `disable=0x0C`.

     Also, it should be noted that disabling prefetching on Core 0 is not supported.

NOTE

This setting doesn't have impact on single core case. Maximum performance gain is observed when all 8 cores of LS2088 board are being used (of which 7 cores have prefetching disabled as Core 0 doesn't support this feature).

5. **Linux Boot Argument**

   - For DPAA platform, if the onboard memory is limited (e.g. LS1043 RDB), following configuration should be appended to default boot arguments:

     ```
     default_hugepagesz=2m hugepagesz=2m hugepages=512 isolcpus=1-3 bportals=s0 qportals=s0
     iommu.passthrough=1 rcupdate.rcu_cpu_stall_suppress=1
     ```

     Through the above boot arguments, 1024 Mbit of hugepages have been assigned for all DPDK applications (512 pages of 2M size each).

     `isolcpus` isolates the CPUs 1, 2, 3 from Linux Kernel process schedulers' scheduling algorithm. All System Service would be scheduled on Core 0 and that should be avoided in application configuration for I/O threads.

     `rcupdate.rcu_cpu_stall_suppress=1` is specifically for cases where Core 0 is also used for running DPDK I/O with `enable_performance_mode.sh` script - where because of Real Time priority setting of the script, RCU stalls might be observed. That leads to screen dump which might impact performance.

   - For DPAA2 platform, following configuration should be appended to default boot arguments:

     ```
     default_hugepagesz=1024m hugepagesz=1024m hugepages=8 isolcpus=1-7
     iommu.passthrough=1 rcupdate.rcu_cpu_stall_suppress=1
     ```

     It is recommended to use 1G huge page size for DPAA2 platform.

     `rcupdate.rcu_cpu_stall_suppress=1` is specifically for cases where Core 0 is also used for running DPDK I/O with `enable_performance_mode.sh` script - where because of Real Time priority setting of the script, RCU stalls might be observed. That leads to screen dump which might impact performance.

     NOTE

     While running DPDK for all core cases, `isolcpus` parameter should not be set in bootargs. `enable_performance_mode.sh` script reserves 99.6% CPU for DPDK application and the rest is given to kernel on all cores, so `isolcpus` is not required. Make sure links are up for all interfaces before running DPDK as kernel tasks may get slowed down.

     NOTE

     Change the value of `isolcpus` parameter based on the platform being used. For example, for LX2 platform use `isolcpus=1-15`

   - In case UEFI based booting is used, the boot arguments are changed from grub.cfg. Please refer to UEFI section on how to update the arguments.

     NOTE

     It should be noted that CPU isolation configuration cannot be changed in a running Linux Kernel. Whereas, huge page configuration can be changed from Linux prompt by writing to `/proc/sys/vm/nr_hugepages` file. Thus, CPU isolation should be carefully decided before booting up Linux Kernel.

     NOTE

     `nousb` can be appended to boot arguments to disable USB in Linux Kernel. This prevents any interrupts from USB devices to be serviced by CPU cores. This is especially important when Core 0 is being used for DPDK I/O performance. But, this option should only be used if there is no dependency of USB devices for system execution, for example, a USB mass storage which contains either the root filesystem or extra filesystem containing data necessary for execution.

6. For Best performance, use the data cores as isolated cpus and operate them in tickless mode on kernel version 4.4 above. For this:
   a. Compile the Kernel with `CONFIG_NO_HZ_FULL=y`
   b. Add bootargs with `'isolcpus=1-7 rcu_nocbs=1-7 nohz_full=1-7'` for 8 core platform and `'isolcpus=1-3 rcu_nocbs=1-3 nohz_full=1-3'` for 4 core platform

   NOTE

   The CONFIG_NO_HZ_FULL linux kernel build option is used to configure a tickless kernel. The idea is to configure certain processor cores to operate in tickless mode and these cores do not receive any periodic interrupts. These cores will run dedicated tasks (and no other tasks will be schedules on such cores obviating the need to send a scheduling tick). A CONFIG_HZ based timer interrupt will invalidate L1 cache on the core and this can degrade dataplane performance by a few % points (to be quantified, but estimated to be 1-3%). Running tickless typically means getting 1 timer interrupt/sec instead of 1000/sec.

7. **Setup of the Performance Validation Environment**
   - It is important that the environment for performance verification uses a balanced core loading approach. Each core should be loaded with equal number of Rx/Tx queues, irrespective of their count. Images below describe some of the I/O scenario using an example setup containing a target board and a packet generator. In all the cases shown, it is assumed that each port has a single queue being serviced by a CPU core. Also, even though below images show 8 ports, it is a generic representation. DPAA boards may not have 8 equal ports (1G/10G) - this representation is assuming traffic is always distributed across equal capacity ports.

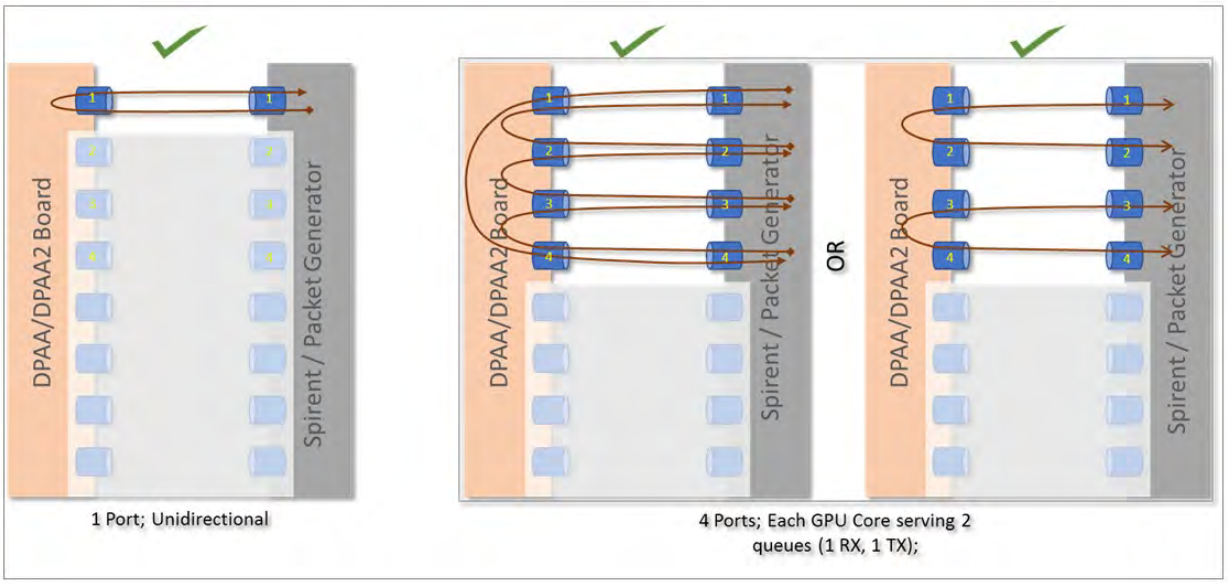

Image above describes 2 cases: One for single port and another for 4 ports. It can be noted that all the cores are equally loaded (equal number of cores, irrespective numbers of ports being serviced). Further, the 4 port case shows that there is more than one way to move stream of packets. (Note the direction of arrows in each case.)

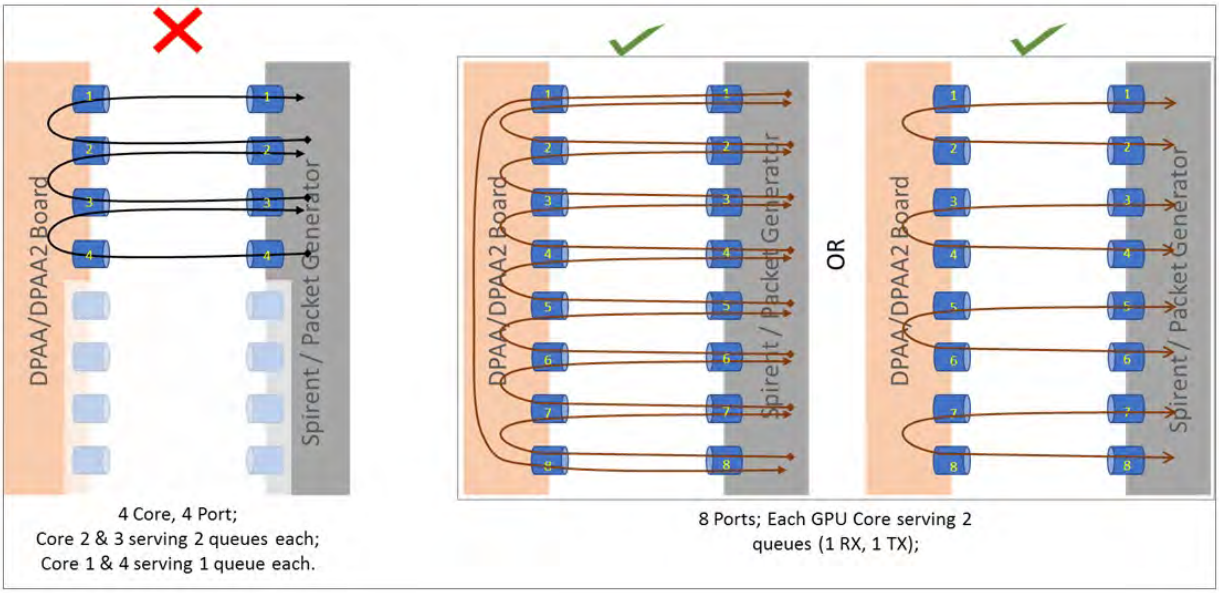

Image above describes a case with 4 ports where the CPU cores are not equally loaded. This is not a recommended combination as this would mean some streams being served (packet per second) slower than others. 8 port combination shown in the image above extends the mapping of 4 ports shown in image before. Once again, it should be noted that there are multiple ways to create a balanced set of streams. A performance setup should choose one baseline and all performance reports should be based on that baseline.

NOTE

For Performance measurement, performing I/O across non-equal capacity ports (`1G=>10G`, vice-verse) is not a valid case. This would lead to build up of queues on higher capacity links eventually stopping traffic when hardware is unable to obtain buffers for storing new incoming packets - eventually stopping traffic.

8. **Uninstalling PCI Ethernet (e1000) NIC Cards**

   - It has been observed that when PCI Ethernet card (for example, on DPAA/DPAA2 RDB boards Intel e1000) are installed, they have a tendency to poll frequently the CPU cores (Core 0, in case of isolation). This has adverse impact on the application performance if DPDK I/O threads are scheduled on same cores which services these interrupts.
   - For best performance, such PCI Ethernet cards should be uninstalled from the hardware. If un-installation is not possible, see the comments mentioned in section below to disable the interface by unlinking it from the Linux Kernel.

NOTE

`nopci` can be appended to boot arguments to completely disable PCI devices from being detected by Linux Kernel. This prevents PCI interrupts from being serviced by CPU. But, this option should not be used if there is dependency on any PCI device for system execution.

Before and during DPDK Application start

1. **Setting real-time priority for DPDK Application**

   - In full fledged distributions, like Ubuntu, the root filesystem contains various system services by default. These services are targeted towards a generic environment. Many of these services require periodic CPU cycles. DPDK I/O threads execute as a run-to-completion process, infinitely looping over CPUs they are affined to. Services which require periodic CPU cycles can interrupt the DPDK I/O threads causing loss of packets and/or latency. Ideally, such services should be disabled or a rootfs without such services should be used for optimal performance. But, in case this cannot be done, real-time priority of application can also achieve desired results.
   - Execute the script `/usr/local/dpdk/enable_performance_mode.sh`. Care should be taken to run the DPDK application from same shell as the one on which script was executed. This is because the script sets some environment variables which are used by DPDK application to define real-time priorities for its threads. This script is also designed

to set to "performance" mode the CPU scaling governor. This prevents the CPU from putting itself into lower power state when not busy. This causes loss of traffic in initial I/O streams when the CPU is expected to spin up to its maximum frequency.

NOTE

This script sets the real-time priorities for any DPDK application which is run after the script has been executed. This also applies to application configured to run on Core 0. Thus, it is important to consider the implication. If the application is run on Core 0 and it is busy in I/O, it can lead to CPU stall causing complete lock-up. DPDK sample applications like `l2fwd, l3fwd, ipsec-secgw` are designed to relinquish the CPU when no I/O is being done. That way, using sample application, all core performance can be calculated. Similar care should be taken while developing custom DPDK applications. **As this script was primarily designed for host applications, it may require modification for it to be used with Virtualization cases (Qemu, VM) and OVS.**

NOTE

Though this script doesn't necessarily require core isolation and tickless kernel, it is still recommended that I/O cores be isolated and tickless kernel be used to get the best performance environment. Also, this script assumes that it is a Ubuntu environment with power governor support and that no other process is running in priority higher than DPDK application.

NOTE

An opposite script, `/usr/local/dpdk/disable_performance_mode.sh`, is also available. This puts the processor back in the "on-demand" scaling governor configuration and also removed the environment variables. It is important to run this script once performance verification of a DPDK sample application has been completed. This would avoid issues with inadvertently executing DPDK application on Core 0 and causing a lock-up.

2. **Using High Performance (PEB) Buffer (Only for DPAA2)**

   - In DPAA2 platform, while creating the resource container using the `dynamic_dpl.sh` script, it is possible to toggle between high performance PEB buffers and normal buffers (DDR). By default, the high performance buffers are enabled for LS2088A; for LS1088A, default configuration is normal buffers.

NOTE

For LS2088A, it is recommended to use high performance buffers which is enabled by default. Though, there is caveat to this as described below.

PEB buffers are limited resources. Overusage of buffers, either through large number of queues or deep taildrop settings, can cause the PEB buffers to overflow causing a interruption of I/O. The hardware might also enter a state from which it will not recover until board is restarted.

Exact limitations of number of queues is based on various parameters and cannot be stated objectively without defining the use-case. As a thumb-rule, refrain from using PEB buffers if configuration requires more than 1 queue per CPU core to be used, assuming all ports and CPU cores are being employed.

For toggling between normal and high performance buffers, use the following environment variable **before** executing the `dynamic_dpl.sh` script:

```
export DPNI_NORMAL_BUF=1
# disables high performance buffers; enables normal buffers
```

3. **Disabling PCI Ethernet (e1000) NICs**

   - As mentioned in the above section, it is preferable if no PCI Ethernet hardware (like e1000 on DPAA/DPAA2 boards) is installed. But, if it is not possible to uninstall a hardware device, following command can be used to unlink the Ethernet card from PCI driver in the Linux Kernel thereby preventing the CPU cores from being interrupted with periodic interrupts. This is specially important when all core performance is to be recorded.

```
echo 1 > /sys/bus/pci/devices/<PCI device BDF address>/remove
```

In the above command, replace `<PCI device BDF address>` with appropriate BDF format bus address of the PCI device, for example `0000:01:00.0`, after properly bypassing the `:` character in the name to avoid failure reported by Linux Bash prompt. For example, `echo 1 > /sys/bus/pci/devices/0000\:01\:00.0/remove`.

This command would unlink the PCI device with BDF address `0000:01:00.0` from its PCI driver's control, thereby disabling it from Linux Kernel.

NOTE

Once the device is unlined from the PCI driver, it would not be usable through the Linux Kernel interface until bound to same or another PCI driver. It is out of scope for this document to record steps necessary for linking a PCI device to a PCI driver to bring it under Linux Kernel control.

4. **Interrupt Assignment for DPIO (Only for DPAA2)**

With the Linux `cat /proc/interrupts` command, interrupts being serviced by each CPU core can be observed.

```
root@Ubuntu:~# cat /proc/interrupts r
           CPU0       CPU1       CPU2       CPU3       CPU4       CPU5       CPU6       CPU7
...
113:          0          0          0          0          0          0          0          0
ITS-fMSI 230000 Edge      dpio.7
114:          0          0          0          0          0          0          0          0
ITS-fMSI 230001 Edge      dpio.6
115:          0          0          0          0          0          0          0          0
ITS-fMSI 230002 Edge      dpio.5
116:          0          0          0          0          0          0          0          0
ITS-fMSI 230003 Edge      dpio.4
117:          0          0          0          0          0          0          0          0
ITS-fMSI 230004 Edge      dpio.3
118:          0          0          0          0          0          0          0          0
ITS-fMSI 230005 Edge      dpio.2
119:          0          0          0          0          0          0          0          0
ITS-fMSI 230006 Edge      dpio.1
120:          0          0          0          0          0          0          0          0
ITS-fMSI 230007 Edge      dpio.0
...
```

This is especially important in case when any interrupts are being serviced by CPUs being used by DPDK. For example, in the above representation, `DPIO` blocks have been shown - these are used by the Linux kernel assigned DPAA ports. Thus, in case a port is assigned to Linux (and some are assigned to DPDK), if I/O is performed on the ports assigned to Linux - there is a possibiMblity that interrupts for that I/O spread across cores which are being used by DPDK. This should be avoided by setting the interrupt affinity. For example, if the DPIO.7 interrupt is considered in from the above output, following terminal snippet shows the affinity of that interrupt:

```
root@Ubuntu:~# cd /proc/irq/113/
root@Ubuntu:/proc/irq/113# ls -la
total 0
dr-xr-xr-x   3 root root 0 Mar  2 23:09 .
dr-xr-xr-x 111 root root 0 Mar  1 17:49 ..
-r--r--r--   1 root root 0 Mar  2 23:09 affinity_hint
dr-xr-xr-x   2 root root 0 Mar  2 23:09 dpio.7
-r--r--r--   1 root root 0 Mar  2 23:09 effective_affinity
-r--r--r--   1 root root 0 Mar  2 23:09 effective_affinity_list
-r--r--r--   1 root root 0 Mar  2 23:09 node
-rw-r--r--   1 root root 0 Mar  2 23:09 smp_affinity
-rw-r--r--   1 root root 0 Mar  2 23:09 smp_affinity_list
-r--r--r--   1 root root 0 Mar  2 23:09 spurious
root@Ubuntu:/proc/irq/113# cat smp_affinity
01
```

Output of `cat smp_affinity` is a mask for cores on which interrupt should be serviced. Affinity can be set by running following command:

```
cat 03 > smp_affinity # for enabling Core 0 and Core 1 for serving interrupts on DPIO.7
```

5. **DPDK Optimal Example Application Configuration**
   - Avoiding Core 0
     - As mentioned above, distributions like Ubuntu have large number of system services. Though some of these services can be disabled, there would always be cases of interrupts or un-interruptible services which would require Core 0 cycles. Isolating the cores through Linux Kernel can be done using Linux boot arguments. This would allow isolated cores to be used exclusively for DPDK I/O threads.
     - Once a configuration of isolated cores is set, similar configuration should be done in DPDK application using the `-c` or `--coremask` command line option.
     - If 4 core (in LS1043A or LS1046A) or 8 core (LS1088A or LS2088A) performance is required, system services should be disabled. Though, it should be noted that performance number using Core 0 show un-deterministic behavior of latency and packet losses. For example, LS2088A has been observed to perform fairly stable on 8 core configuration with services disabled, but same cannot be stated for LS1088A boards.
   - Avoiding Core 0 in case of Virtual Machine
     - Core 0 impact on the DPDK I/O performance is valid for host as well as for Virtual Machine (VM). While configuring DPDK application in VM, Core 0 should be avoided. The Qemu configuration should be such as to avoid using the Host's Core 0 for any VM logical core which is running DPDK I/O threads.
     - For a VM environment, OVS or similar switching stack maybe used on the host. Qemu configuration should be such as to avoid mapping the logical cores (VCPU) assigned to VM with any of the CPU cores which run the switching stack threads. `taskset` command is recommended for affining the Qemu threads (serving VM VCPUs) to a particular core. Refer Launch QEMU and virtual machine for more details.
   - Using Multi-queue configuration to spread load across multiple CPUs
     - DPDK applications can utilize RSS based spreading of incoming frames across multiple queues servicing a particular port. This is especially helpful in obtaining better performance by utilizing 1:N mapping of ports to CPU cores. That is, more than 1 CPU core serves a single port.

       This requires adequate configuration of Port-Queue-Core combination through DPDK application command line. For example, `l3fwd` application can be configured to use 8 ports on a LS2088A board for serving 2 ports using the following command:

       ```
       l3fwd -c 0xFF -n 1 -- -p 0x3 --config="(0,0,0),(0,1,1),(0,2,2),(0,3,3),(1,0,4),(1,1,5),
       (1,2,6),(1,3,7)"
       ```

       In the above command, the `--config` argument takes multiple tuples of *(port, queue, core)*. Note that Port number 0 is being served by Core 0, 1, 2 and 3 using separate queue numbers.

       Using similar configuration described for `l2fwd` application above, optimal utilization of Cores can be achieved. The command line options vary with DPDK application and DPDK online web manual should be referred for specific example applications.

       Though the above command snippet utilizes Core 0, necessary care should be taken as described in text above.
     - As mentioned above, DPDK uses RSS (Receive Side Scaling) to spread the incoming frames across multiple queues. Multi-queue setup needs to be supported by varying flows from the Packet Generator. The flows created should be such as to have varying Layer-2 or Layer-3 field values.
       - As flow distribution is based on hash over Layer-2 and Layer-3 fields, it is possible that lower number of flows would distribute unevenly across queues. Number of flows created should be large enough to spread equally across all the configured queues.

- Consideration for CPU clusters
  - SoC have multiple clusters housing one or more CPUs. Each cluster shares a L2 cache. In general, this allows threads sharing data over CPUs from same cluster to perform better than threads sharing data across CPUs from different clusters.
  - For best performance, it is recommended that DPDK application configuration for selecting CPU cores should be such to either use all CPUs from same cluster or spread queues equally across clusters. When this is combined with Core 0 issue, it implies that using Cluster having Core 0 might perform slightly worse than using cluster which doesn't use Core 0.
- Using limited number of I/O buffers
  - DPDK allows an application to change the number of maximum in-flight buffers. This is especially useful when there is memory constraint and DPDK application has limited resources.
  - Each buffer, for processing, has to be fetched into the system caches (L2/L1). Larger the number of buffers in-flight simultaneously, more would be the flushing of buffer addresses. To avoid excessive pressure on the L2 caches (eviction, hit, miss cycle), lower number of buffers should be used. Exact numbers would depend on the use-case and resources available.

    For example, in case of `l3fwd` application, `--socket-mem=1025` like EAL argument can be provided to the application as shown in command snippet below. Note that the argument has been provided before the `--` - these are passed to DPDK framework rather than the application itself.

    ```
    ./l3fwd -c 0xFF -n 1 --socket-mem=1025 -- -p 0x1 --config="(0,0,0),(0,1,1),(0,2,2),
    (0,3,3),(0,4,4),(0,5,5),(0,6,6),(0,7,7)"
    ```
- Degradation of OVS performance with increase in flows
  - It has been observed that OVS doesn't perform well when the number of flows are large. This is because of OVS's inherent design to use a flow matching table of size 8000. If larger than 8000 flows are used, the overall performance degrades because of hash collisions. If more than 8000 flows are required, use the following command **after** OVS bridge has been created:

    ```
    ovs-vsctl set bridge br0 other-config:flow-eviction-threshold=65535
    ```

    This command would set the size of OVS internal flow table to 65535.
- Use `-n 1` as argument passed to DPDK EAL
  - `-n` argument for DPDK application is for defining number of DDR channels for the system - which is typically valid for NUMA architectures. This parameter is used for mempool memory alignments. For NXP SoCs, this should be set to "`1`". NXP SoCs supported by DPDK are non-NUMA.

9.2.11 Use cases

9.2.11.1 Traffic bifurcation using DPDMUX on DPAA2

9.2.11.1.1 Environment setup

NOTE

This section uses LS2088A Board as an example platform for demonstrating the use-case. This use-case would be applicable for all DPAA2 platforms including LS1088A, LX2160A.

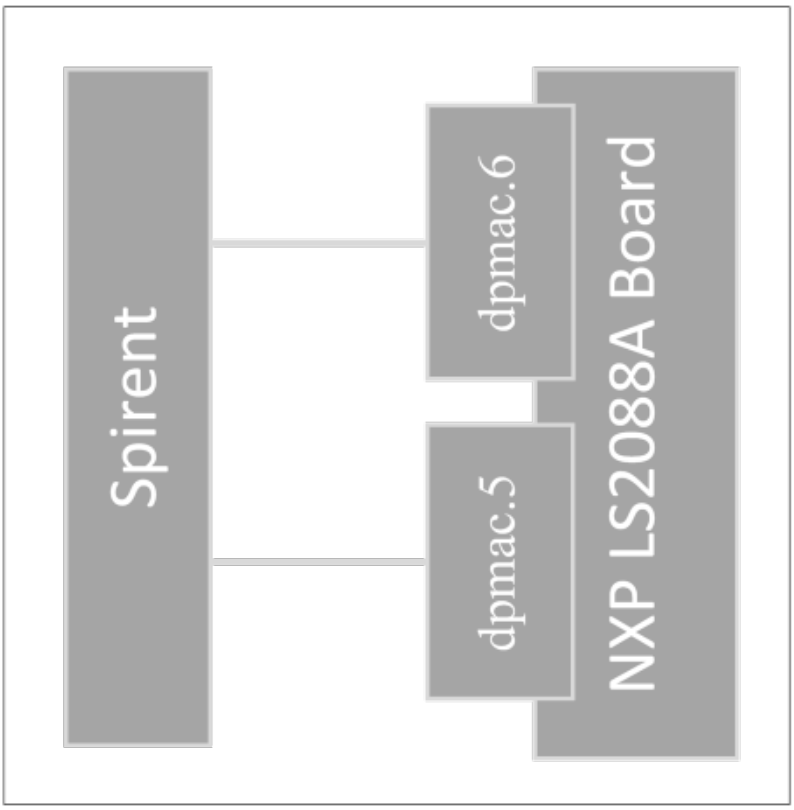

Figure 230. External view of the setup

In the above image, a NXP LS2088A board has been shown connected to a packet generator (Spirent).

NOTE

Though the example uses Spirent as packet generator, any other source of controlled packet transmission can also be used.

NOTE

The image uses `dpmac.5` and `dpmac.6` interfaces for demonstration. Any other other interface can also be used - in which case, the commands described below would have to be altered accordingly.

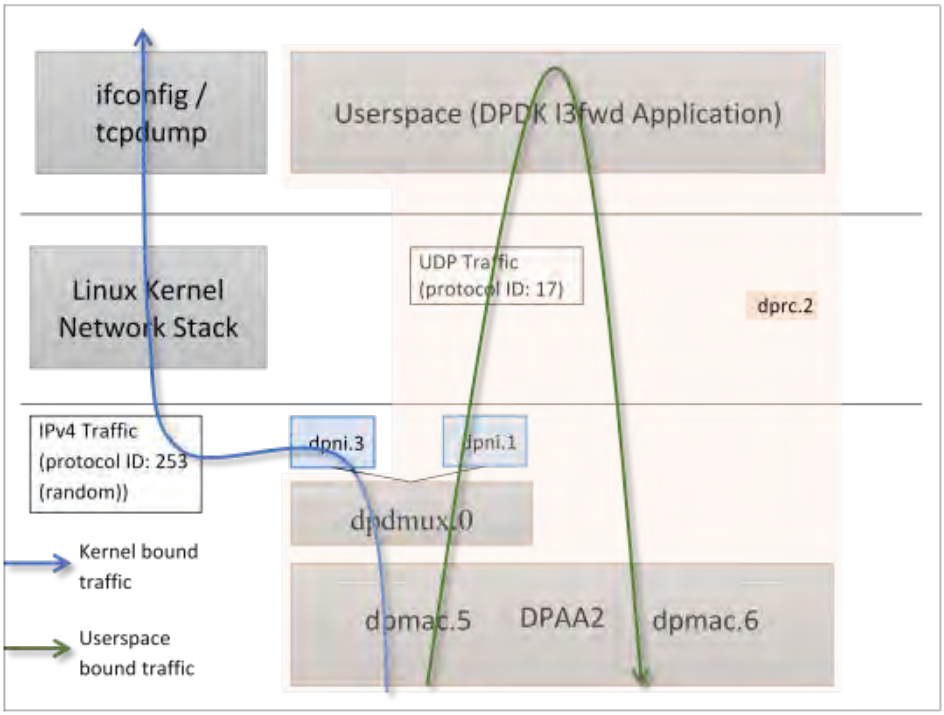

Figure 231. NXP LS2088A Internal Block for traffic bifurcation setup

In the above environment setup, a DPRC container (dprc.2) is created containing DPAA2 *dpmac.5* and *dpmac.6* interfaces. DPDMUX *dpdmux.0* is created with *dpni.1* and *dpni.3*, while *dpni.2* is connected with *dpmac.2*.

NXP LS2088A board has 8 10G links – 4 Fiber ports, and 4 Copper ports.

Figure 232. LS2088ARDB ports

On a standard LSDK configuration, these ports are represented using dpmac.X naming. Corresponding to the image above describing the ports, following is the naming convention:

- dpmac.1, dpmac.2, dpmac.3 and dpmac.4 are ETH4, ETH5, ETH6 and ETH7, respectively
- dpmac.5, dpmac.6, dpmac.7 and dpmac.8 are ETH0, ETH1, ETH2 and ETH3, respectively.

Following are the commands to create the above setup:

Though this section uses dpmac.5 and dpmac.6 as interfaces; similar setup can be created using any other ports of LS2088A (or any other DPAA2 DPDMUX supporting board). Replace dpmac.X in commands below with equivalent port name.

1. Create DPRC with dpmac.5 and dpmac.6 attached. This would create dpni.1 and dpni.2 internally.

   ```
   /usr/local/dpdk/dpaa2/dynamic_dpl.sh dpmac.5 dpmac.6
   ```

   Output log:

   ```
   ##################### Container  dprc.2  is created ####################
   ```

```
Container dprc.2 have following resources :=>

* 1 DPMCP
* 16 DPBP
* 8 DPCON
* 8 DPSECI
* 2 DPNI
* 18 DPIO
* 2 DPCI
* 2 DPDMAI

######################### Configured Interfaces ##########################
Interface Name        Endpoint              Mac Address
==============        ========              ==================
dpni.1                dpmac.5               -Dynamic-
dpni.2                dpmac.6               -Dynamic-
```

2. Create a DPNI for assigning to Linux Kernel. This would be used for forwarding the UDP traffic.

```
ls-addni --no-link
```

Output log:

```
Created interface: eth0 (object:dpni.3, endpoint: )
```

NOTE

It is important to note the dpni.X naming which is dynamically generated by the dynamic_dpl.sh script and ls-addni command. In case they are different from what is described in this section, corresponding changes should be done in the commands below.

3. Unplug the DPRC from VFIO, create a DPDMUX, assign DPNIs (`dpni.1` and `dpni.3`) to it, and then plug the DPRC back again to VFIO so that Userspace application can use it. This was already in plugged state because of the `dynamic_dpl.sh` script.

```
# Unbinding dprc.2 from VFIO
echo dprc.2 > /sys/bus/fsl-mc/drivers/vfio-fsl-mc/unbind

# Remove dpni.2 from dprc.2 so that it can be assigned to dpdmux
restool dprc disconnect dprc.2 --endpoint=dpni.1

# Create dpdmux with CUSTOM flow creation; Flows would be created
# from the Userspace (DPDK) application
restool dpdmux create --default-if=1 --num-ifs=2 --method DPDMUX_METHOD_CUSTOM --
manip=DPDMUX_MANIP_NONE --option=DPDMUX_OPT_CLS_MASK_SUPPORT --container=dprc.1

# Create DPDMUX with two DPNI connections and one DPMAC connection
restool dprc connect dprc.1 --endpoint1=dpdmux.0.0 --endpoint2=dpmac.5
restool dprc connect dprc.1 --endpoint1=dpdmux.0.1 --endpoint2=dpni.3
restool dprc connect dprc.1 --endpoint1=dpdmux.0.2 --endpoint2=dpni.1
restool dprc assign dprc.1 --object=dpdmux.0 --child=dprc.2 --plugged=1
```

NOTE

The default queue has been configured as `0.1` in DPDK DPMUX driver. In the above commands, `dpni.3` has been configured to `--endpoint1=dpdmux.0.1`. Thus, all traffic which is not filtered would be sent by `dpdmux.0` to `dpni.3`. Further, the l2fwd application has currently configured UDP traffic (IPv4 Protocol Header field value 17) to be sent to `--endpoint1=dpdmux.0.2`, which corresponds to `dpni.1`.

```
# Bind the DPRC back to VFIO
echo dprc.2 > /sys/bus/fsl-mc/drivers/vfio-fsl-mc/bind

# Export the DPRC
export DPRC=dprc.2
```

If required, IP Address can be assigned to `eth0`, which would appear in Linux OS to represent the dpni.3. Thereafter, external packet generator or a device can send ICMP traffic to confirm the bifurcation of traffic.

```
root@Ubuntu:~# ifconfig eth0 10.0.0.10/24 up
root@Ubuntu:~# ifconfig eth0
eth0: flags=4163<UP,BROADCAST,RUNNING,MULTICAST>  mtu 1500
        inet 10.0.0.10  netmask 255.255.255.0  broadcast 10.0.0.255
        inet6 fe80::dce6:feff:fe3a:e105  prefixlen 64  scopeid 0x20<link>
        ether de:e6:fe:3a:e1:05  txqueuelen 1000  (Ethernet)
        RX packets 0  bytes 0 (0.0 B)
        RX errors 0  dropped 0  overruns 0  frame 0
        TX packets 6  bytes 516 (516.0 B)
        TX errors 0  dropped 0 overruns 0  carrier 0  collisions 0

root@Ubuntu:~# restool dpni info dpni.3
dpni version: 7.8
dpni id: 3
plugged state: plugged
endpoint state: 1
endpoint: dpdmux.0.1, link is up
link status: 1 - up
mac address: de:e6:fe:3a:e1:05
dpni_attr.options value is: 0
```

4. Run the l3fwd application

```
l3fwd -c 0xF0 -n 1 -- -p 0x3 --config="(0,0,4),(1,0,5)" -P --traffic-split-proto 17:2
```

NOTE

- In the above command, `-c 0xF0` corresponds to the cores being used by the DPDK Application. In case they are different, the mask should be changed.
- Further, `--config="(0,0,4),(1,0,5)"` represents **(Port, Queue, Core)** – which should align with the core masks provided. The Port value is '0' and '1' assuming only `dpmac.5` and `dpmac.6` have been assigned to the DPRC `dprc.2`. Only single queue per device has been considered. Numbering for all elements of this tuple starts from 0.
- `--traffic-split-proto 17:2` conveys to the application that protocol number `17` (UDP) should be sent to DPDMUX port `2` - which would be `dpni.1` (accodring to order of creation of ports in DPDMUX).

Output log:

```
EAL: Detected 8 lcore(s)
EAL: Probing VFIO support...
EAL: VFIO support initialized
EAL: PCI device 0000:01:00.0 on NUMA socket -1
```

```
EAL:   Invalid NUMA socket, default to 0
EAL:   probe driver: 8086:10d3 net_e1000_em
PMD: dpni.1: netdev created
PMD: dpni.2: netdev created
PMD: dpsec-0 cryptodev created
PMD: dpsec-1 cryptodev created
PMD: dpsec-2 cryptodev created
PMD: dpsec-3 cryptodev created
PMD: dpsec-4 cryptodev created
PMD: dpsec-5 cryptodev created
PMD: dpsec-6 cryptodev created
PMD: dpsec-7 cryptodev created
^[[6~L3FWD: Promiscuous mode selected
L3FWD: LPM or EM none selected, default LPM on
Initializing port 0 ... Creating queues: nb_rxq=1 nb_txq=4...  Address:00:00:00:00:00:01,
Destination:02:00:00:00:00:00, Allocated mbuf pool on socket 0
LPM: Adding route 0x01010100 / 24 (0)
LPM: Adding route 0x02010100 / 24 (1)
LPM: Adding route IPV6 / 48 (0)
LPM: Adding route IPV6 / 48 (1)
txq=4,0,0 txq=5,1,0 txq=6,2,0 txq=7,3,0
Initializing port 1 ... Creating queues: nb_rxq=1 nb_txq=4...  Address:DA:CA:B2:78:68:19,
Destination:02:00:00:00:00:01, Allocated mbuf pool on socket 0
txq=4,0,0 txq=5,1,0 txq=6,2,0 txq=7,3,0
Initializing rx queues on lcore 4 ... rxq=0,0,0
Initializing rx queues on lcore 5 ... rxq=1,0,0
Initializing rx queues on lcore 6 ...
Initializing rx queues on lcore 7 ...

Checking link statusdone
Port0 Link Up. Speed 1000 Mbps -full-duplex
Port1 Link Up. Speed 10000 Mbps -full-duplex
L3FWD: entering main loop on lcore 5
L3FWD:  -- lcoreid=5 portid=1 rxqueueid=0
L3FWD: lcore 7 has nothing to do
L3FWD: lcore 6 has nothing to do
L3FWD: entering main loop on lcore 4
L3FWD:  -- lcoreid=4 portid=0 rxqueueid=0
```

5. Send following packet streams from the Packet generator (in this case, Spirent)
    a. Packets sent to `dpmac.5`
        i. UDP Traffic: IPv4 Packet with Protocol ID field (next protocol) = 0x11 (hex) or 17 (decimal); Size greater than 82 bytes.
        ii. IPv4 Only Traffic: IPv4 Traffic with any random Protocol ID (next protocol) = 253 (Experimental); Size greater than equal to 64 bytes. Src IP: 1.1.1.1; Dst IP: 2.1.1.1 (so that packets can be forwarded by l3fwd application from `dpmac.5 to dpmac.6`.
    b. Packets sent to dpmac.2
        i. IPv4 Only Traffic: IPv4 Traffic with any random Protocol ID (next protocol) = 253 (Experimental); Size greater than equal to 64 bytes. Src IP: 2.1.1.1; Dst IP: 1.1.1.1 (so that packets can be forwarded by l3fwd application from `dpmac.6 to dpmac.5`.

9.2.11.1.2 Expected results

Following is the expected output:

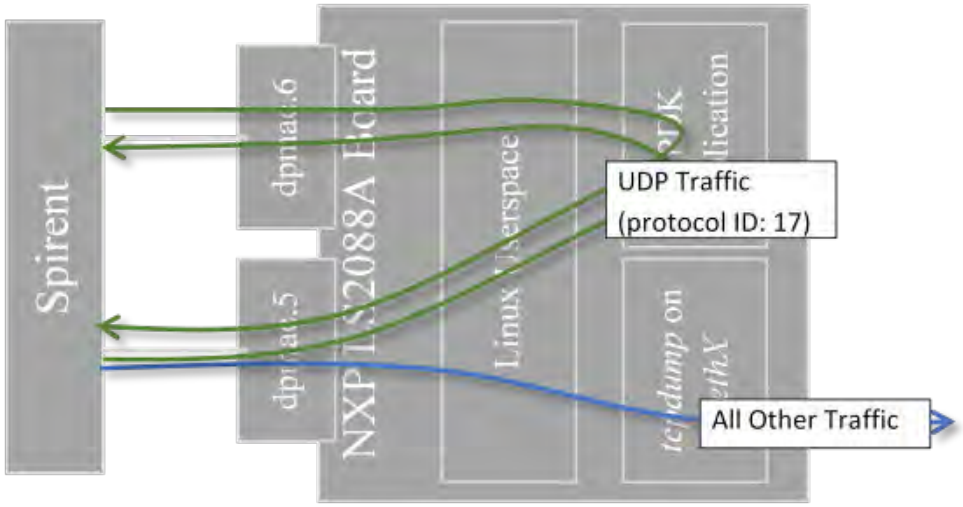

Figure 233. Expected output on Linux Userspace and Packet Generator

1. All traffic with UDP Protocol set in IPv4 header would be sent to Linux Kernel network stack and would be eventually available on the ethernet interface (backed by *dpni.3*). Application like tcpdump would be able to demonstrate the packets coming in:

```
root@localhost:~# ifconfig
…
eth0: flags=4163<UP,BROADCAST,RUNNING,MULTICAST>  mtu 1500
inet 10.0.0.10  netmask 255.255.255.0  broadcast 10.0.0.255
inet6 fe80::5885:a5ff:fe1c:76af  prefixlen 64  scopeid 0x20<link>
ether 5a:85:a5:1c:76:af  txqueuelen 1000  (Ethernet)
RX packets 0  bytes 0 (0.0 B)
RX errors 0  dropped 0  overruns 0  frame 0
TX packets 5  bytes 426 (426.0 B)
TX errors 0  dropped 0 overruns 0  carrier 0  collisions 0
…

tcpdump: verbose output suppressed, use -v or -vv for full protocol decode
listening on eth0, link-type EN10MB (Ethernet), capture size 262144 bytes
22:39:10.286502 IP 10.0.0.11 > Ubuntu.ls2088ardb:  ip-proto-200 90
22:39:11.286385 IP 10.0.0.11 > Ubuntu.ls2088ardb:  ip-proto-201 90
22:39:12.286286 IP 10.0.0.11 > Ubuntu.ls2088ardb:  ip-proto-202 90
22:39:13.286172 IP 10.0.0.11 > Ubuntu.ls2088ardb:  ip-proto-203 90
22:39:14.286075 IP 10.0.0.11 > Ubuntu.ls2088ardb:  ip-proto-204 90
22:39:15.285958 IP 10.0.0.11 > Ubuntu.ls2088ardb:  ip-proto-205 90
22:39:16.285845 IP 10.0.0.11 > Ubuntu.ls2088ardb:  ip-proto-206 90
22:39:17.285757 IP 10.0.0.11 > Ubuntu.ls2088ardb:  ip-proto-207 90
22:39:18.285636 IP 10.0.0.11 > Ubuntu.ls2088ardb:  ip-proto-208 90
22:39:19.285541 IP 10.0.0.11 > Ubuntu.ls2088ardb:  ip-proto-209 90
^C
10 packets captured
10 packets received by filter
0 packets dropped by kernel
root@Ubuntu:~#
```

In the above output, it can be observed that packets of different IPv4 Protocol fields are being received in Linux. (This setting can be configured in Spirent). `Ubuntu.ls2088ardb` refers to the local machine IP `10.0.0.10` which was configured using `ifconfig`.

2. All other traffic would be visible in the packet generator being reflected by 'l3fwd' application. Below is the screen-grab of Wireshark output of packet captured by Spirent which were reflected by the l3fwd application:

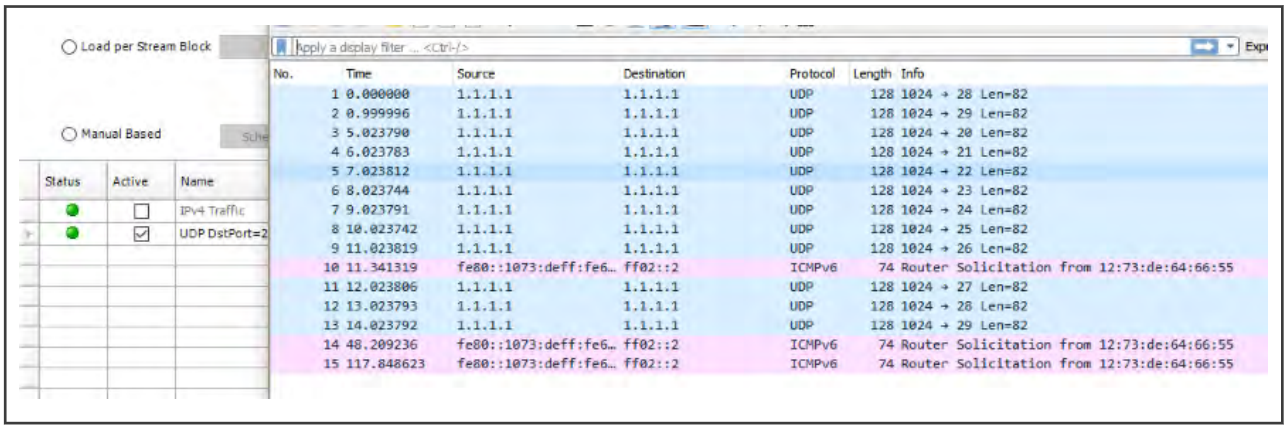

9.2.11.1.3 Application Limitation

Currently, the application has been designed to only bifurcate traffic on the basis of the protocol number matched in the IP header (provided through `--traffic-split-proto 17:2` argument). Also, only a single matching criteria can be provided for now. For enhanced cases, the application will have to be modified.

9.2.11.2 DPDK multi-process

9.2.11.2.1 DPDK Multiprocess Support

Supported Platforms (and their derivatives):

- DPAA2 : LS108x, LS208x, LX2160

NXP DPDK provides a set of data plane libraries and network interface controller driver for Layerscape platforms. This section provides information about multiprocess support in DPDK for NXP platforms.

- Multiprocess: In DPDK context, this is a deployment model where multiple independent processes are executed each of which can functionally behave as threads of a parent process.
- Parent/Primary Process: The first DPDK process which is run. In the DPDK multiprocess model, this process is responsible for configuration of the devices and any other common configuration to be used by the secondary processes. This process can also perform I/O on the devices. While executing the process, if `--proc-type=primary` is used as an EAL argument, the process is expected to be primary. In case this is not the first DPDK process, then this would result in error.
- Child/Secondary Process: Every next DPDK process which is started with `--proc-type=secondary` EAL argument. Another way is to add `--proc-type=auto` as EAL argument which automatically selects between primary or secondary based on order of execution.

NOTE

In case another instance of DPDK application is started but it is not expected to be part of a Multiprocess model (separate DPDK instance), then adequate configuration of hugepages need to be done. By default, DPDK maps all available hugepages which only be consumed by a single process, and its secondary processes.

9.2.11.2.2 Various Multiprocess Models

NOTE

This section is only applicable for DPAA2 as this involves I/O in the secondary process. Refer to following sections for DPAA support.

Based on the functionality of the processes, the multiprocess model can be categorized into two broad spectrum:

- Symmetric: A model where the Primary and Secondary process have similar functionality. For example, where Primary processes is performing I/O over one `eth` device, while one or more secondary processes are also performing I/O on separate `eth` devices. Or, if each device is equally shared across multiple processes for I/O.

```
+-----------+    +-------------+   +-------------+    +-------------+
| Primary   |    | Secondary1 |   | Secondary2 |... | SecondaryN |
+-----XV---+    +------XV----+   +------XV----+    +-----XV-----+
      ||              ||              ||              ||
+-----||---+    +------||----+   +------||----+    +-----||-----+
| Device 1 |    | Device 2   |   | Device 3   |... | Device N   |
+-----------+    +-------------+   +-------------+    +-------------+
```

Where, { X = Rx and V = Tx } signifying I/O (Rx/Tx, both). Another way to visualize is where I/O (Rx/Tx) is performed by each process on same device, maybe through separate queues:

```
+-----------+    +-------------+   +-------------+    +-------------+
| Primary   |    | Secondary1 |   | Secondary2 |... | SecondaryN |
+-----XV---+    +------XV----+  +------XV----+    +------XV-----+
      ||              ||             ||                ||
      ||  .-------------`             ||                ||
      ||  ||   .-------------------------`              ||
      ||  ||   ||    .-----------------------------------`
      ||  ||   ||    ||
+-----||--||---||----||--+
|         Device 1       |
+------------------------+
```

- Asymmetric: A model where the primary and secondary process have dis-similar functionality in terms of I/O. For example, primary process performing Rx on a device, transferring data to a secondary process through some internal process mechanism (IPC, for example, Ring), which in turn does Tx on the same device.

```
+-----------+    +-------------+
| Primary   >----X Secondary1 |
+-----X-V-V+    +------V-----+
      | | |            |         +-------------+
      | |  `-----------)---------X Secondary2 |
      | |              |         +------V-----+
      | |              |                |
      | |              |                |           +-------------+
      |  `-------------)----------------)-------...-X SecondaryN |
      |                |                |           +-----V------+
      |                |                |                 |
      |.---------------'                |                 |
      ||.------------------------------`                  |
      |||.-------------------------------------------------`
      ||||
+-----||||-+
| Device 1 |
+-----------+
```

Current implementation of NXP DPDK supports both mode on the supported platforms. The design of the application drives the mode being used.

9.2.11.2.3 Environment Setup

NOTE

This section is applicable for DPAA2 only.

NOTE

For all DPDK multiprocess use-cases, disable ASLR - Address Space Layout Randomization[15]This is the default setting on various Linux distribution for preventing stack and other malicious address manipulation attacks. This works by randomizing the address-space layout of the ELF binary. This impact secondary process because the second or further process would attempt to find the same address space as the primary process (hugepage). This should be disabled using:

```
echo 0 > /proc/sys/kernel/randomize_va_space
```

DPRC or DPAA2 Resource Container contains a number of resources which need to be segregated between the primary and secondary process. Initializing all the I/O devices (dpni, dpseci, dpdmai, etc) is done by primary - secondary process is not expected to initialize any I/O device. Only control devices like `dpio`, `dpmcp` need to be initialized by secondary for its own work.

While executing the primary or secondary processes, list of devices to blacklist (those which are not to be configured) need to be passed. Alternatively, a list of all devices which are to be configured can be passed. This list is important as overlap would result in incorrect configuration.

1. Create enough `dpmcp` devices: While creating the DPRC (through `dynamic_dpl.sh` script), create as many `dpmcp` as the number of processes (primary and secondary) expected to use the DPRC.

   ```
   $ export DPMCP_COUNT=3              # for 1 Primary, 2 Secondary
   $ ./dynamic_dpl.sh dpmac.1 dpmac.2
   ```

2. Create enough `dpio` devices to suffice the total number of cores being used across primary and secondary, plus one additional for each process. For example, in case primary is to be run with 2 cores, and secondary with 2 Cores, total `dpio` required are: (Total Process = 3) x (3 `dpio` per process) = 9

   NOTE

   A large number of `dpio` devices are already created in default container created by `dynamic_dpl.sh`.

   ```
   $ export DPIO_COUNT=10              # A larger number to accommodate conf changes
   $ ./dynamic_dpl.sh dpmac.1 dpmac.2
   ```

   Assuming that following DPRC is created:

   ```
   $ restool dprc show dprc.2
   ```

   ```
   dprc.2 contains 58 objects:
   object          label           plugged-state
   dpni.3                          plugged
   dpni.2                          plugged
   dpni.1                          plugged
   dpbp.16                         plugged
   dpbp.15                         plugged
   dpbp.14                         plugged
   dpbp.13                         plugged
   dpbp.12                         plugged
   dpbp.11                         plugged
   dpbp.10                         plugged
   dpbp.9                          plugged
   dpbp.8                          plugged
   dpbp.7                          plugged
   dpbp.6                          plugged
   dpbp.5                          plugged
   dpbp.4                          plugged
   ```

[15] https://en.wikipedia.org/wiki/Address_space_layout_randomization

```
    dpbp.3                          plugged
    dpbp.2                          plugged
    dpbp.1                          plugged
    dpci.1                          plugged
    dpci.0                          plugged
    dpseci.7                        plugged
    dpseci.6                        plugged
    dpseci.5                        plugged
    dpseci.4                        plugged
    dpseci.3                        plugged
    dpseci.2                        plugged
    dpseci.1                        plugged
    dpseci.0                        plugged
    dpdmai.1                        plugged
    dpdmai.2                        plugged
    dpmcp.23                        plugged
    dpmcp.22                        plugged
    dpmcp.21                        plugged
    dpio.17                         plugged
    dpio.16                         plugged
    dpio.15                         plugged
    dpio.14                         plugged
    dpio.13                         plugged
    dpio.12                         plugged
    dpio.11                         plugged
    dpio.10                         plugged
    dpio.9                          plugged
    dpio.8                          plugged
    dpcon.8                         plugged
    dpcon.7                         plugged
    dpcon.6                         plugged
    dpcon.5                         plugged
    dpcon.4                         plugged
    dpcon.3                         plugged
    dpcon.2                         plugged
    dpcon.1                         plugged
```

Ignore `dpni`, `dpbp`, `dpci`, `dpseci`, `dpcon` - as they are all configured by the primary process only. Secondary process is designed to skip them. But, `dpio` and `dpmcp` are important considerations.

3. Start primary application with EAL arguments for blacklisting

```
# Only allowing dpio.8, dpio.9, dpio.10, dpmcp.21 in primary; blacklisting all others

$ ./primary_process -c 0x3 -b fslmc:dpio.11 -b fslmc:dpio.12 -b fslmc:dpio.13 \
      -b fslmc:dpio.14 -b fslmc:dpio.15 -b fslmc:dpio.16 -b fslmc:dpio.17 \
      -b fslmc:dpmcp.22 -b fslmc:dpmcp.23 -- <application arguments>

# Only allowing fslmc:dpio.11, fslmc:dpio.12, fslmc:dpio.13, fslmc:dpmcp.22 in secondary
process 1

$ ./secondary_process1 -c 0x3 -b fslmc:dpio.8 -b fslmc:dpio.9 -b fslmc:dpio.10 \
      -b fslmc:dpio.14 -b fslmc:dpio.15 -b fslmc:dpio.16 -b fslmc:dpio.17 \
      -b fslmc:dpmcp.21 -b fslmc:dpmcp.23 -- <application arguments>

# Only allowing fslmc:dpio.14, fslmc:dpio.15, fslmc:dpio.16, fslmc:dpmcp.23 in secondary process
2; ignoring dpio.17

$ ./secondary_process1 -c 0x3 -b fslmc:dpio.8 -b fslmc:dpio.9 -b fslmc:dpio.10 \
```

```
      -b fslmc:dpio.11 -b fslmc:dpio.12 -b fslmc:dpio.13 -b fslmc:dpio.17 \
      -b fslmc:dpmcp.21 -b fslmc:dpmcp.22 -- <application arguments>
```

NOTE

- In the above format `<bus>:<device>` is the way to provide the device identifier for blacklisting/whitelisting.
- Another method would be to whitelist all devices - but, that would require listing even the `dpni, dpci, dpseci, and dpcon` devices. That would increase the length of the argument to unmanageable lengths.

9.2.11.2.4 Executing DPDK example application

NOTE

This section is applicable for DPAA2 only.

NOTE

Applications used in the snippets below are not available on the LSDK rootfs. For standalone compilation of these applications, refer Compiling DPDK Example Applications

NOTE

It important to note that before any secondary application execution, ASLR support should be disabled by using `echo 0 > /proc/sys/kernel/randomize_va_space`.

DPDK provides two sample applications which can be used for I/O using multiprocess model.

```
./examples/multi_process/symmetric_mp             # symmetric model example
./examples/multi_process/client_server_mp         # asymmetric model example
```

Some other examples are also provided from NXP which use the available hardware support in DPAA2:

```
./examples/multi_process/symmetric_mp_qdma        # symmetric model with QDMA example
```

Detailed explanation can be seen from DPDK documentation: https://doc.dpdk.org/guides/sample_app_ug/multi_process.html

Using the same DPRC shown as sample above.

1. Executing symmetric_mp with 1 Primary, 1 Secondary:

   ```
   # Running primary process with single Core, 2 ports; assigning 1 dpmcp and 5 dpio to it.

   ./symmetric_mp -c 0x1 -n 1 -b fslmc:dpio.13 -b fslmc:dpio.14 -b fslmc:dpio.15 \
           -b fslmc:dpio.16 -b fslmc:dpio.17 -b fslmc:dpmcp.22 -b fslmc:dpmcp.23 \
           -- -p 0x3 --num-procs=2 --proc-id=0
   ```

   In the above, `--num-procs=2` signifies 2 processes in total. `--proc-id=0` is the identifier for the primary process.

   ```
   # Running secondary process with single core (not overlappping with primary), 2 ports (same as
   primary); Assigning 1 dpmcp and 5 dpio to it. (We can ignore the extra dpmcp preserved for 3
   process, if any)

   ./symmetric_mp -c 0x2 -n 1 --proc-type=secondary -b fslmc:dpio.8 \
           -b fslmc:dpio.9 -b fslmc:dpio.10 -b fslmc:dpio.11 -b fslmc:dpio.12 \
           -b fslmc:dpmcp.21 -b fslmc:dpmcp.23 -- -p 0x3 --num-procs=2 --proc-id=1
   ```

   In case more than one instance of application is to be executed, similar blacklisting has to be done to distribute resources. Further, `--num-procs` and `--proc-id` too need to be changed.

   Send I/O to the ports assigned to the processes and observe traffic being reflected back.

2. Executing client_server_mp with 1 Primary, 1 Secondary:

   This sample application has two different applications which are executed as server and client. Server process is responsible for Rx from interfaces (all) and distributing to Client for Tx (one queue per device).

```
# Running server (primary) process with 1 Core, 2 ports; assigning 1 dpmcp and 5 dpio to it.

./mp_server -c 0x1 -n 1 -b fslmc:dpio.13 -b fslmc:dpio.14 -b fslmc:dpio.15 \
        -b fslmc:dpio.16 -b fslmc:dpio.17 -b fslmc:dpmcp.22 -b fslmc:dpmcp.23 \
        -- -p 0x3 -n 1
```

```
 # Running client (secondary) process with 1 Core, 2 ports; assigning 1 dpmcp and 5 dpio to it.

./mp_client -c 0x2 -n 1 --proc-type=secondary -b fslmc:dpio.8 \
        -b fslmc:dpio.9 -b fslmc:dpio.10 -b fslmc:dpio.11 -b fslmc:dpio.12 \
        -b fslmc:dpmcp.21 -b fslmc:dpmcp.23 -- -n 0
```

   Send I/O to the ports assigned to the processes and observe traffic being forwarded.

3. Executing QDMA example application:

   `symmetric_mp_qdma` application is similar to symmetric_mp except that the mbuf (buffer) transfers between Rx and Tx are done using the NXP DPAA2 QDMA (`dpdmai`) hardware block.

```
# Running primary process with single Core, 2 ports; assigning 1 dpmcp and 5 dpio, 1 dpdmai
to it:
# Assuming that there are two DPDMAI objects in the DPRC: dpdmai.1 and dpdmai.2, the command is
very similar to the symmetric_mp example:

./symmetric_mp_qdma -c 0x1 -n 1 -b fslmc:dpio.13 -b fslmc:dpio.14 -b fslmc:dpio.15 \
        -b fslmc:dpio.16 -b fslmc:dpio.17 -b fslmc:dpmcp.22 -b fslmc:dpmcp.23 \
        -b fslmc:dpdmai.1 -- -p 0x3 --num-procs=2 --proc-id=0
```

   Notice the extra parameter `-b fslmc:dpdmai.1` as compared the `symmetric_mp` command. This extra parameter conveys this process to ignore the `dpdmai.1` block and use `dpdmai.2` in Primary.

```
# Running secondary process with single core (not overlappping with primary), 2 ports (same as
primary); Assigning 1 dpmcp and 5 dpio, 1 dpdmai to it. (We can ignore the extra dpmcp preserved
for 3 process, if any)

./symmetric_mp_qdma -c 0x2 -n 1 --proc-type=secondary -b fslmc:dpio.8 \
        -b fslmc:dpio.9 -b fslmc:dpio.10 -b fslmc:dpio.11 -b fslmc:dpio.12 \
        -b fslmc:dpmcp.21 -b fslmc:dpmcp.23 -b fslmc:dpdmai.2 \
        -- -p 0x3 --num-procs=2 --proc-id=1
```

4. Executing `l2fwd-crypto` example application:

   l2fwd-crypto is a standard DPDK cryto demonstration application, which also supports multiprocess model.

   Primary difference with usual execution of l2fwd-crypto are the `mp-emask` and `mp-cmask` arguments passed - signifying ethernet ports and crypto ports, respectively, which would be used by l2fwd-crypto instance.

   Following can be a possible primary application command, using the same DPRC as used for examples described above:

```
./l2fwd-crypto -c 0x3 -n 1 -b fslmc:dpio.13 -b fslmc:dpio.14 -b fslmc:dpio.15 \
        -b fslmc:dpio.16 -b fslmc:dpio.17 -b fslmc:dpmcp.22 -b fslmc:dpmcp.23 \
        -- -p 0x3 -q 1 --mp-emask 0x1 --mp-cmask 0x1 --chain CIPHER_ONLY \
    --cipher_algo aes-cbc --cipher_op ENCRYPT \
    --cipher_key 01:02:03:04:05:06:07:08:09:0a:0b:0c:0d:0e:0f:10 \
    --cipher_iv 01:02:03:04:05:06:07:08:09:0a:0b:0c:0d:0e:0f:10
```

Secondary application can be executed like:

```
./l2fwd-crypto -c 0xc -n 1 --proc-type=secondary -b fslmc:dpio.8 \
        -b fslmc:dpio.9 -b fslmc:dpio.10 -b fslmc:dpio.11 -b fslmc:dpio.12 \
        -b fslmc:dpmcp.21 -b fslmc:dpmcp.23 -b fslmc:dpdmai.2 \
        -- -p 0x3 -q 1 --mp-emask 0x2 --mp-cmask 0x2 --chain CIPHER_ONLY \
    --cipher_algo aes-cbc --cipher_op ENCRYPT \
    --cipher_key 01:02:03:04:05:06:07:08:09:0a:0b:0c:0d:0e:0f:10 \
    --cipher_iv 01:02:03:04:05:06:07:08:09:0a:0b:0c:0d:0e:0f:10
```

5. Non-I/O performing applications: `dpdk-pdump` and `dpdk-procinfo`

   Both, `dpdk-pdump` and `dpdk-procinfo` are examples of secondary applications can query the primary application (the first one) for information, without performing any actual I/O over the network devices. Both these are compiled as default as part of the DPDK framework, just like `testpmd` and can be obtained from `app/` folder in the compiled output.

   a. `dpdk-pdump` for capturing packets

      The sample application `dpdk-pdump` allows capturing of packets arriving on other interfaces/devices available in DPDK. For compiling `dpdk-pdump`, enable `CONFIG_RTE_LIBRTE_PMD_PCAP=y` and `CONFIG_RTE_LIBRTE_PDUMP=y` configuration. Later configuration is to enable dumping packets to a PCAP format which can then be used to read using applications like Wireshark. PCAP support is optional.

      NOTE

      For PCAP support, 'libpcap' library has to be provided to DPDK during compilation. This needs to be compiled for ARM64 target.

      Execute the primary application (only `testpmd` currently suports interfacing with `dpdk-pdump`):

      ```
      testpmd -c 0xff -n 1 -- -i --portmask=0x3 --nb-ports=2
      ...
      # Start I/O on application
      testpmd> set fwd io
      testpmd> start
      ```

      Execute the secondary application, `dpdk-pdump`. Just like the `symmetric_mp` and other multiprocess application, isolation of DPRC resources like `dpio` and `dpmcp` needs to be done.

      ```
      dpdk-pdump -n 1 -b fslmc:dpio.8 -b fslmc:dpio.9 -b fslmc:dpio.10 -b fslmc:dpio.11 \
                 -b fslmc:dpio.12 -b fslmc:dpio.13 -b fslmc:dpio.14 -b fslmc:dpio.15 \
                 -b fslmc:dpio.16  -b fslmc:dpmcp.29 --mbuf-pool-ops-name="ring_mp_mc" \
                 -- --pdump "port=0,queue=*,rx-dev=./rx.pcap"
      ```

      In the above command, `port=0, ...` parameters convey `dpdk-pdump` app that capture should be done on port 0 (for example, `dpni.1`) and packets being received on all queues `queue=*`. Further, all the captured packets can be dumped to a PCAP file using `rx-dev=<path to pcap file>` if LIBPCAP was enabled.

      In the above example, only Rx'd packets are being written to PCAP. For Tx'd packets, use something similar to `port=0,queue=*,tx-dev=./...` where the output PCAP file is different from Rx'd packets. Both, Rx and Tx, options can be simultaneously provided.

      Stop `dpdk-pdump` using Ctrl+C and copy the pcap file for reading through external application like Wireshark

   b. `dpdk-procinfo` for dumping application information like memory or port statistics

      `dpdk-procinfo` is an inbuilt application which allows dumping information like memory and statistics of a running (primary) DPDK application.

Execute the primary application: (Unlike `dpdk-pdump`, `dpdk-procinfo` can be run along with any primary application):

```
testpmd -c 0xff -n 1 -- -i --portmask=0x3 --nb-ports=2
...
# Start I/O on application
testpmd> set fwd io
testpmd> start
```

Execute the secondary application, `dpdk-procinfo`:

NOTE

It is a good practice to isolate the resources of the application (`dpio`, `dpmcp` and `dpdmai`) for all cases of secondary application. Though `dpdk-procinfo` can work without that isolation because it doesn't necessary access device specific data, it is good practice to do the isolation in this case as well.

```
dpdk-procinfo -- -m
```

Above command would dump to screen the memory layout of the primary DPDK application. There are other switches also available like `-s` which can dump the statistics.

NOTE

- l2fwd/l3fwd in their current design are not suited for multiprocess execution and hence would not work with substantial modification of segregating the queues and Rx/Tx processing.
- For exiting the application, it is advisable to send SIGKILL to all the application. Similar to "killall <application name>". If not, all secondary should be killed first (Ctrl+C or SIGKILL) before the primary process.

9.2.11.3 Traffic Policing in DPAA

On the DPAA SoCs (like LS1043, LS1046), using the FMC tool, traffic policing can be done using simple configuration.

This is part of the Ingress Traffic Management in the FMAN block which sits between the QMan and the hardware in the overall vertical block layout of DPAA. Once the frames are ingressed from WRIOP into FMAN, post the Parser and Classify block, the Policer block can be configured to color (and drop) frames based on the policy. Policer blocks passes along any non-dropped frame towards the QMAN through the FMAN<=>QMAN interface. FMAN support upto 256 policy profiles.

NOTE

A sample XML has been added to DPDK source folder `/usr/local/dpdk/dpaa/usdpaa_policy_hash_ipv4_1queue_policer_ls1046.xml`. This section uses snippets from this file. This is ONLY applicable for LS1046A boards.

1. Define a Policer policy XML. In this example, a copy of `usdpaa_policy_hash_ipv4_1queue_policer_ls1046.xml` has been used.

```
<policer name="policer9">
    <algorithm>rfc2698</algorithm>
    <color_mode>color_aware</color_mode>
    <CIR>5000000</CIR>
    <EIR>5500000</EIR>
    <CBS>5000000</CBS>
    <EBS>5500000</EBS>
    <unit>packet</unit>
    <action condition="on-red" type="drop"/>
</policer>
```

In the above configuration, a **RFC2698** (Two Rate Three Color Marker) policer has been defined. This policy is based on 2 token buckets representing two rates - **PIR/EIR** or Peak/Exceed Information Rate and **CIR** or Committed Information Rate

- and 3 colors - Red, Yellow and Green. Based on the information configured above for **CBS** (Committed Burst Size) and **EBS** (Peak/Exceed Burst Size), streams are marked as being colored for one of the 3 colors.

NOTE

Based on the standard trTCM (Three Color Marker), CIR is rate of filling the committed bucket and CBS being its initial size, EIR is the rate of filling the exceed bucket and EBS being its initial size. Thus, in case a flow of packets is received which exceeds the EIR, it would be marked as Red; else if it exceeds CIR but below EIR, it would be marked Yellow; otherwise Green.

The configuration above has following elements:

- `policer name` is the name of the Policer which would be used for assigning to the distribution policy records
- `algorithm` which has to be defined to `rfc2968`, or `rfc4115` for trTCM for differentiated services or `pass-through` to disable policing (default)
- `color_mode` which can be set to either of `color_aware` or `color_blind`. `color_aware` uses the pre-colored information, if any, to make decisions, while `color_blind` ignores the existing color information.
- `CIR`, `EIR` - for Committed Information Rate and Exceed Information Rate, respectively. Metric for this is defined by `unit` per second (explained below).
- `CBS`, `EBS` - for Committed Burst Size and Exceed Burst Size, respectively. Metric for this is defined by `unit` per second (explained below).
- `unit` - defines the metric for all the four configuration parameters, namely `CIR, CBS, EIR, EBS`. For information rate, it would be `unit/second` whereas for burst size it would `unit`.

2. Apply the policy to one or more distribution policies:

```
    <distribution name="hash_ipv4_src_dst_dist9">
        <queue count="1" base="0xd00"/>
        <key>
            <fieldref name="ipv4.src"/>
            <fieldref name="ipv4.dst"/>
        </key>
        <action type="policer" name="policer9"/>
    </distribution>
```

3. Apply the policy file using the FMC tool

```
root@LS1046ARDB:~# fmc -x
root@LS1046ARDB:~# fmc -c /usr/local/dpdk/dpaa/usdpaa_config_ls1046.xml -p /usr/local/dpdk/dpaa/
usdpaa_policy_hash_ipv4_1queue_policer_ls1046.xml -a
```

Perform I/O hereafter to see the affect of policing being implemented.

9.2.11.4 Precision Time Protocol (IEEE1588)

The Precision Time Protocol (PTP) is a protocol used to synchronize clock throughout a computer network. PTP was originally defined in IEEE1588-2002 standard.

To test ptp functionality in DPDK, one can use DPDK example application “ptpclient” present in DPDK source code. ptpclient application uses DPDK IEEE1588 API to communicate with a PTP master clock to synchronize the time on NIC and, optionally, on the Linux system.

NOTE

ptpclient application is based on assumption that it is single-threaded and it always works in slave mode.

.

9.2.11.4.1 Supported platforms

PTP is supported for DPAA2 based LS1088A and LS2088A family of SoCs.

9.2.11.4.2 Build procedure

1. By default, IEEE1588 is kept disabled in DPDK config file. To enable, set 'CONFIG_RTE_LIBRTE_IEEE1588=y' in config/defconfig_arm64-dpaa-linuxapp-gcc.
2. Build DPDK using steps mentioned in Build DPDK section.
3. Build ptpclient application with
   - make -C examples/ptpclient/
4. 'ptpclient' executable will be generated in "examples/ptpclient/build/" directory

9.2.11.4.3 Test setup and prerequisite to test with ptpclient

ptpclient test application works in slave mode. It can be tested with ptp4l test application running in Linux on another machine in master mode.

Two machines are required to be connected back-to-back:

- **Tester Machine**: to run ptp4l test application. ptp4l test application can be directly installed on tester machine via apt-install type commands or can be built by downloading linuxptp package.
- **DUT (Board NXP platform)**: to run ptp4client test application.

DPAA2 port of DUT board on which ptpclient test application will be tested should be connected to one of ethernet port of Tester Machine (Tester_port).

9.2.11.4.4 Test procedure with ptpclient

1. **Tester machine**: Ensure the Tester_port is up and connected to DPAA2_port of DUT board. Confirm this by testing ping. If the tester machine is NXP DPAA2 based board and the Tester_port does not show up in ifconfig -a command, run command like below to create the interface:

   ```
   #ls-addni dpmac.1
   Created interface: eth1 (object:dpni.0, endpoint: dpmac.1)
   ```

   For more details on interface creation, see section Creating a DPAA2 network interface.

   Start ptp server on tester machine. This will act as PTP Master. Suppose eth1 is tester_port which is connect to DUT

   ```
   #./ptp4l -i eth1  -m -2
   ptp4l[581.659]: selected /dev/ptp1 as PTP clock
   ptp4l[581.718]: port 1: INITIALIZING to LISTENING on INIT_COMPLETE
   ptp4l[581.718]: port 0: INITIALIZING to LISTENING on INIT_COMPLETE
   ptp4l[587.813]: port 1: LISTENING to MASTER on ANNOUNCE_RECEIPT_TIMEOUT_EXPIRES
   ptp4l[587.813]: selected local clock b26433.fffe.beb68c as best master
   ptp4l[587.813]: assuming the grand master
   role
   ```

2. **DUT machine**: This machine will act as ptp slave. Create DPRTC instance and attach DPAA2 port to DPDK using dynamic_dpl script.

   ```
   #export
   DPRTC_COUNT=1

   #source ./dynamic_dpl.sh dpmac.1
   ```

Confirm from dynamic_dps.sh output that one DPRTC object is created.

Run ptpclient applicaton on DUT_port

a. To synchronize DUT PTP Hardware clock with Tester Machine PTP Hardware clock

```
#./ptpclient -l 1 -n 1 -- -p 0x1 -T 0
```

b. To synchronize DUT PTP Hardware clock with Tester Machine PTP Hardware clock and additionally update system kernel clock

```
#./ptpclient -l 1 -n 1 -- -p 0x1 -T 1
```

c. To verify if System kernel clock is updated, read time before and after execution of above ptpclient command using date command

```
#date
```

```
root@localhost:~# export DPRTC_COUNT=1
root@localhost:~# source ./dynamic_dpl.sh dpmac.5
parent - dprc.1
Creating Non nested DPRC
NEW DPRCs
dprc.1
dprc.2
Using board type as 2088
Using High Performance Buffers
##################### Container  dprc.2  is created ####################
Container dprc.2 have following resources :=>
 * 1 DPMCP
 * 16 DPBP
 * 8 DPCON
 * 8 DPSECI
 * 1 DPNI
 * 18 DPIO
 * 2 DPCI
 * 2 DPDMAI
 * 1 DPRTC
######################### Configured Interfaces #########################
Interface Name        Endpoint              Mac Address
==============        ========              ==================
dpni.1                dpmac.5               -Dynamic-
root@localhost:~# date
Mon Jul  1 21:41:26 UTC 2019
root@localhost:~# ./ptpclient -l 1 -n 1 -- -p 0x1 -T 0
EAL: Detected 8 lcore(s)
EAL: Detected 1 NUMA nodes
EAL: Multi-process socket /var/run/dpdk/rte/mp_socket
fslmc: Skipping invalid device (power)
EAL: Probing VFIO support...
EAL: VFIO support initialized
EAL: PCI device 0000:01:00.0 on NUMA socket -1
EAL:   Invalid NUMA socket, default to 0
EAL:   probe driver: 8086:10d3 net_e1000_em
PMD: dpni.1: netdev created
dpaa2_net: Rx offloads non configurable - requested 0x0 ignored 0x2000
dpaa2_net: Tx offloads non configurable - requested 0x18000 ignored 0x1c000
Core 1 Waiting for SYNC packets. [Ctrl+C to quit]
Master Clock id: 32:70:3e:ff:fe:ff:a6:59
```

```
T2 - Slave  Clock.  207s 560468378ns
T1 - Master Clock.  19324s 999662036ns
T3 - Slave  Clock.  0s 0ns
T4 - Master Clock.  19324s 999702684ns
Delta between master and slave clocks:19221219448171ns

Comparison between Linux kernel Time and PTP:
Current PTP Time: Thu Jan  1 05:23:48 1970 780202685 ns
Current SYS Time: Mon Jul  1 21:42:10 2019 317847 ns
Delta between PTP and Linux Kernel time:-1561997901537542450ns
[Ctrl+C to quit]

root@localhost:~# date
Mon Jul  1 21:42:18 UTC 2019
root@localhost:~# ./ptpclient -l 1 -n 1 -- -p 0x1 -T 1
EAL: Detected 8 lcore(s)
EAL: Detected 1 NUMA nodes
EAL: Multi-process socket /var/run/dpdk/rte/mp_socket
fslmc: Skipping invalid device (power)
EAL: Probing VFIO support...
EAL: VFIO support initialized
EAL: PCI device 0000:01:00.0 on NUMA socket -1
EAL:   Invalid NUMA socket, default to 0
EAL:   probe driver: 8086:10d3 net_e1000_em
PMD: dpni.1: netdev created
dpaa2_net: Rx offloads non configurable - requested 0x0 ignored 0x2000
dpaa2_net: Tx offloads non configurable - requested 0x18000
ignored 0x1c000

Core 1 Waiting for SYNC packets. [Ctrl+C to quit]
Master Clock id: 32:70:3e:ff:fe:ff:a6:59
T2 - Slave  Clock.  20845s 385135978ns
T1 - Master Clock.  19339s 999998152ns
T3 - Slave  Clock.  0s 0ns
T4 - Master Clock.  19340s 23532ns
Delta between master and slave clocks:8917307442853ns

Comparison between Linux kernel Time and PTP:
Current PTP Time: Thu Jan  1 08:16:02 1970 692874689 ns
Current SYS Time: Thu Jan  1 08:16:02 1970 692915 ns
Delta between PTP and Linux Kernel time:52105ns
[Ctrl+C to quit]
root@localhost:~# date
Thu Jan  1 05:16:17 UTC 1970
root@localhost:~#
```

Figure 234. LS2088ARDB DUT logs

9.3 Vector Packet Processing (VPP)

NOTE

VPP is not supported in LSDK 20.04 as LSDK 20.04 is based on DPDK v19.11 and VPP upstream has not migrated to DPDK v19.11. It will be supported in next LSDK release. VPP based on DPDK v18.11 is supported as per LSDK 19.09 release.

9.3.1 Introduction

The Vector Packet Processing (VPP) platform is an extensible framework that provides out-of-the-box production quality switch/router functionality. It is the open source version of VPP technology: a high performance, packet-processing stack that can run on commodity CPUs. The benefits of this implementation of VPP are its high performance, proven technology, its modularity and flexibility, and rich feature set. It is a modular design. The framework allows anyone to "plug in" new graph nodes without the need to change core/kernel code.

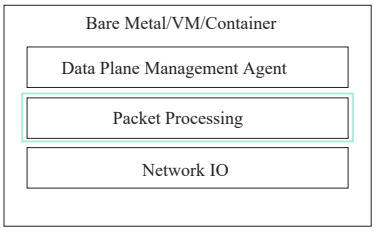

VPP reads the largest available vector of packets from the network IO layer.

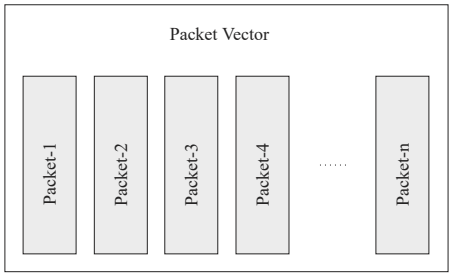

VPP then processes the vector of packets through a Packet Processing graph.

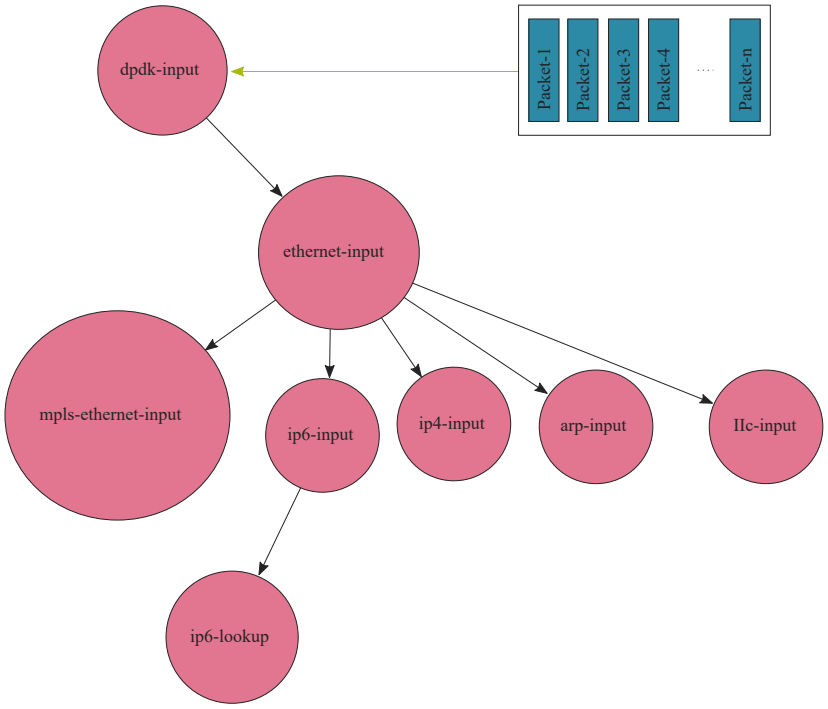

Rather than processing the first packet through the whole graph, and then the second packet through the whole graph, VPP instead processes the entire vector of packets through a graph node before moving on to the next graph node.

Because the first packet in the vector warms up the instruction cache, the remaining packets tend to be processed at extreme performance. The fixed costs of processing the vector of packets are amortized across the entire vector. This leads not only to very high performance, but also statistically reliable performance. If VPP falls a little behind, the next vector contains more packets, and thus the fixed costs are amortized over a larger number of packets, bringing down the average processing cost per packet, causing the system to catch up. As a result, throughput and latency are very stable. If multiple cores are available, the graph scheduler can schedule (vector, graph node) pairs to different cores.

The graph node architecture of VPP also makes for easy extensibility. You can build an independent binary plugin for VPP from a separate source code base (you need only the headers). Plugins are loaded from the plugin directory. A plugin for VPP can rearrange the packet graph and introduce new graph nodes. This allows new features to be introduced via the plugin, without needing to change the core infrastructure code.

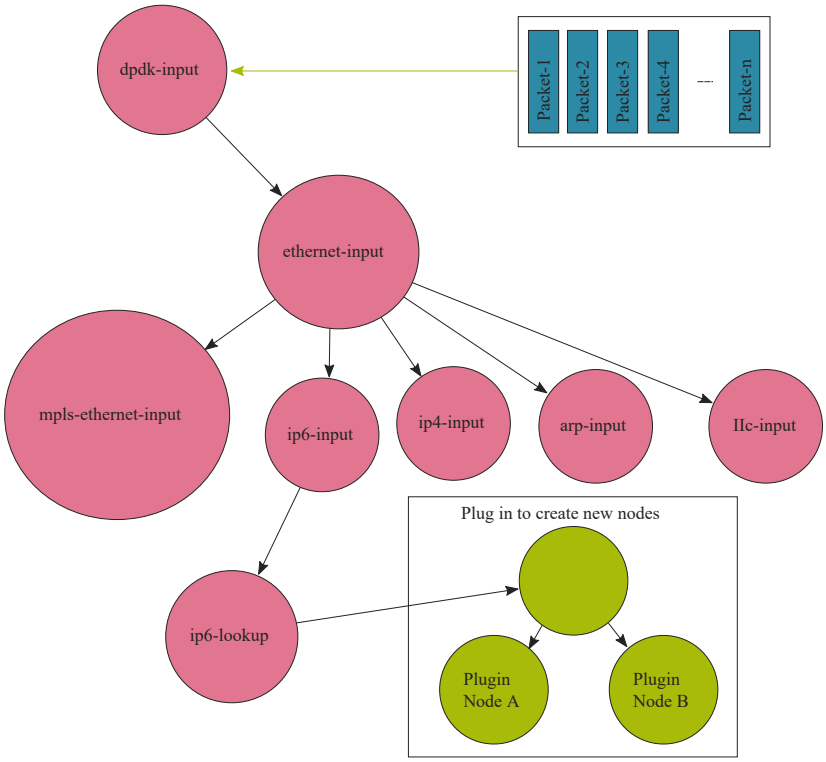

For more details see, https://wiki.fd.io/view/VPP.

9.3.2 Supported platform

VPP supports LS1043A, LS1046A, LS1088A, LS2088A and LX2160A family of SoCs. This section details the architectural and port layout of their Reference Design Boards.

VPP v19.01 Upstream + NXP Patches is supported by this LSDK release.

Refer to the following for board specific information:

- LS1043A Reference Design Board
- LS1046A Reference Design Board
- LS1088A Reference Design Board
- LS2088A Reference Design Board
- LX2160A Reference Design Board

9.3.3 Supported usecases

- vRouter: VPP as virtual router
- vSwitch: VPP as virtual switch
- VPP Cross-connect
- IPsec: VPP can perform the IPsec in *protocol offload* and *non-protocol offload* modes. DPDK supports following modes that VPP can use for IPsec:
  - DPDK OpenSSL Crypto driver
  - DPDK Crypto driver

— DPDK Crypto look-aside protocol offload driver

9.3.4 Build VPP

Standalone build steps

This section details steps required to build VPP in a standalone environment.

Prerequisites before compiling VPP

Before compiling VPP as a standalone build, following dependencies need to be resolved independently:

1. DPDK libraries required for packets processing. See section Standalone build of DPDK libraries and applications for DPDK compilation. It is required to add `EXTRA_CFLAGS='-g -Ofast -fPIC -ftls-model=local-dynamic'` in DPDK compilation command to make DPDK libraries compatible with VPP.
2. OpenSSL libraries.

VPP compilation

```
git clone https://source.codeaurora.org/external/qoriq/qoriq-components/vpp
git checkout -b <local_branch_name> <release_tag> # Replace "<local_branch_name/release_tag>" with
LSDK release tag specific information
export DPDK_PATH=<DPDK installed path>
export CROSS_TOOLCHAIN= <Path to Toolchain>
export CROSS_SYSROOT= <Path to sysroot directory> (Optional)
export CROSS_PREFIX=aarch64-linux-gnu
export PLATFORM=dpaa
export PATH=<toolchain path>/bin:<toolchain path>/aarch64-linux-gnu/bin:$PATH
export OPENSSL_PATH=<openssl path>
cd vpp
make install-dep
cd build-root
make distclean
make V=0 PLATFORM=dpaa TAG=dpaa install-deb -j 4
```

After compilation, there will be some `deb` packages generated in `vpp/build-root` directory. Copy all `.deb` packages to the `/usr/local/vpp` directory in rootfs.

For Yocto images, if RPM are required, use `install-rpm` in place of `install-deb`.

Flexbuild build steps

Following are steps for compiling VPP using the standard Flexbuild environment. For detailed steps, see section How to build LSDK with Flexbuild. A summary of steps has been listed below for easy access:

1. Setup flexbuild environment

   ```
   <Fetch Flexbuild as per steps in LSDK Documentation>
   cd flexbuild_<version>
   source setup.env
   ```

2. Enable VPP in Flexbuild

   By default VPP is not enabled for compilation/packaging in Flexbuild. This can be enabled by setting the following in the build configuration file (`build_lsdk.cfg`):

   ```
   CONFIG_APP_VPP=y
   ```

3. Compile VPP

```
flex-builder -c vpp
```

After this step, the debian package files `deb` would be available in the `build/apps/components_LS_arm64/usr/local/vpp/`. Then, using the `merge-components` this would be available in rootfs in `/usr/local/vpp`.

4. Installing VPP

Follow the steps below for installing VPP on the rootfs. These are assuming that user is currently working on the target board with the rootfs built through steps above deployed.

```
cd /usr/local/vpp
dpkg --unpack *.deb
export LD_LIBRARY_PATH=/usr/lib64/: /usr/lib/x86_64-linux-gnu/:$LD_LIBRARY_PATH
```

9.3.5 Executing VPP

Setup VPP environment

Following are the steps for running VPP:

- **LS2088, LS1088A, and LX2160A board setup**

```
cd /usr/local/dpdk/dpaa2
. ./dynamic_dpl.sh dpmac.1 dpmac.2
mkdir /mnt/hugepages
mount -t hugetlbfs none /mnt/hugepages
echo 256 > /proc/sys/vm/nr_hugepages
```

- **LS1046 and LS1043 board setup:**

```
mkdir /mnt/hugepages
mount -t hugetlbfs none /mnt/hugepages
echo 256 > /proc/sys/vm/nr_hugepages
fmc -x
export DPAA_NUM_RX_QUEUES=1
cd /usr/local/dpdk/dpaa
```

Run the FMC script for board specific configuration. For example, for LS1046, run the following command:

```
fmc -c usdpaa_config_ls1046.xml -p usdpaa_poolicy_hash_ipv4_1queue.xml -a
```

Return to original working folder

```
cd -
```

NOTE

`<int0>` and `<int1>` in the following commands are the interface names and must be replaced with the actual interface names. Run the command `vppctl show int` after running `vpp -c /etc/vpp/startup.conf.dpkg-new &` to check the interface names. To check the associated MAC address of an interface, run the command `vppctl show hard`.

WARNING

For achieving performance, `enable_performance_mode.sh` script can be executed before VPP execution. This script helps in setting VPP threads with RT priority, setting CPU governor to performance mode, and disabling any watchdog interrupts. This script is **not** recommended for production or formal environments. It might also lead to CPU hogging as I/O threads are given RT priority stalling other OS threads/services. Use with caution.

The script is available at `/usr/local/dpdk/` folder in rootfs.

Execute VPP

VPP Cross-connect:

```
vpp -c /etc/vpp/startup.conf.dpkg-new  &
vppctl set interface state <int0> up
vppctl set interface state <int1> up
vppctl set interface l2 xconnect <int0> <int1>
vppctl set interface l2 xconnect <int1> <int0>
```

VPP vRouter:

```
vpp -c /etc/vpp/startup.conf.dpkg-new
vppctl
set int ip address <int0> 1.1.1.2/16
set int ip address <int1> 2.1.1.2/16
set int state <int0> up
set int state <int1> up
set ip arp static <int0> 1.1.1.3 <interface mac of next hop>
set ip arp static <int1> 2.1.1.3 <interface mac of next hop>
ip route add 10.1.0.0/16 via 1.1.1.3 <int0>
ip route add 20.1.0.0/16 via 2.1.1.3 <int1>
set int mtu 1500 <int0>
set int mtu 1500 <int1>
```

VPP IPSec

Commands to run on board 1:

```
vpp -c /etc/vpp/startup.conf.dpkg-new &
vppctl
ipsec select backend esp 1
set interface ip address <int0> 1.1.1.2/24
set interface ip address <int1> 192.168.100.2/24
set interface state <int0> up
set interface state <int1> up
set ip arp static <int1> 192.168.100.3 <interface mac of next hop>
ipsec sa add 10 spi 1001 esp crypto-alg aes-cbc-128 crypto-key 4a506a794f574265564551694d653768
integ-alg sha1-96 integ-key 4339314b55523947594d6d3547666b45764e6a58 tunnel-src 192.168.100.2 tunnel-
dst 192.168.100.3
ipsec sa add 11 spi 1002 esp crypto-alg aes-cbc-128 crypto-key 4a506a794f574265564551694d653768
integ-alg sha1-96 integ-key 4339314b55523947594d6d3547666b45764e6a58 tunnel-src 192.168.100.3 tunnel-
dst 192.168.100.2
ipsec spd add 1
set interface ipsec spd <int1> 1
set interface promiscuous on <int1>
ipsec policy add spd 1 priority 10 outbound action protect sa 10 local-ip-range 1.1.1.3 - 1.1.1.3
remote-ip-range 2.1.1.3 - 2.1.1.3
ipsec policy add spd 1 priority 10 inbound action protect sa 11 local-ip-range 1.1.1.3 - 1.1.1.3
remote-ip-range 2.1.1.3 - 2.1.1.3
ip route add count 1 2.1.1.3/32 via 192.168.100.3 <int1>
```

```
set ip arp static <int0> 1.1.1.3 <interface mac of next hop>
ipsec policy add spd 1 priority 100 inbound action bypass protocol 50
ipsec policy add spd 1 priority 100 outbound action bypass protocol 50
```

Commands to run on board 2:

```
vpp -c /etc/vpp/startup.conf.dpkg-new &
vppctl
ipsec select backend esp 1
set interface ip address <int0> 2.1.1.2/24
set interface ip address <int1> 192.168.100.3/24
set interface state <int0> up
set interface state <int1> up
set ip arp static <int1> 192.168.100.2 <interface mac of next hop>
ipsec sa add 20 spi 1001 esp crypto-alg aes-cbc-128 crypto-key 4a506a794f574265564551694d653768
integ-alg sha1-96 integ-key 4339314b55523947594d6d3547666b45764e6a58 tunnel-src 192.168.100.2 tunnel-
dst 192.168.100.3
ipsec sa add 21 spi 1002 esp crypto-alg aes-cbc-128 crypto-key 4a506a794f574265564551694d653768
integ-alg sha1-96 integ-key 4339314b55523947594d6d3547666b45764e6a58 tunnel-src 192.168.100.3 tunnel-
dst 192.168.100.2
ipsec spd add 1
set interface ipsec spd <int1> 1
set interface promiscuous on <int1>
ipsec policy add spd 1 priority 10 inbound action protect sa 20 local-ip-range 2.1.1.3 - 2.1.1.3
remote-ip-range 1.1.1.3 - 1.1.1.3
ipsec policy add spd 1 priority 10 outbound action protect sa 21 local-ip-range 2.1.1.3 - 2.1.1.3
remote-ip-range 1.1.1.3 - 1.1.1.3
ip route add count 1 1.1.1.3/32 via 192.168.100.2 <int1>
set ip arp static <int0> 2.1.1.3 <interface mac of next hop>
ipsec policy add spd 1 priority 100 inbound action bypass protocol 50
ipsec policy add spd 1 priority 100 outbound action bypass protocol 50
```

9.3.6 Known Limitations

- In DPAA1 platform, only available FMC configuration files are for 1, 2, 4 queues per port.
- DPDK Crypto Lookaside (protocol offload) mode is only available for IPv4.

9.3.7 VPP performance reproducibility guide - LS1043A/LS1046A

IPsec performance reproducibility on LS1046A/LS1043A boards: This setup will use two 1g ports and one 10g port of both boards. 1g ports should be connected to the Spirent whereas 10g ports of both boards should be connected back to back.

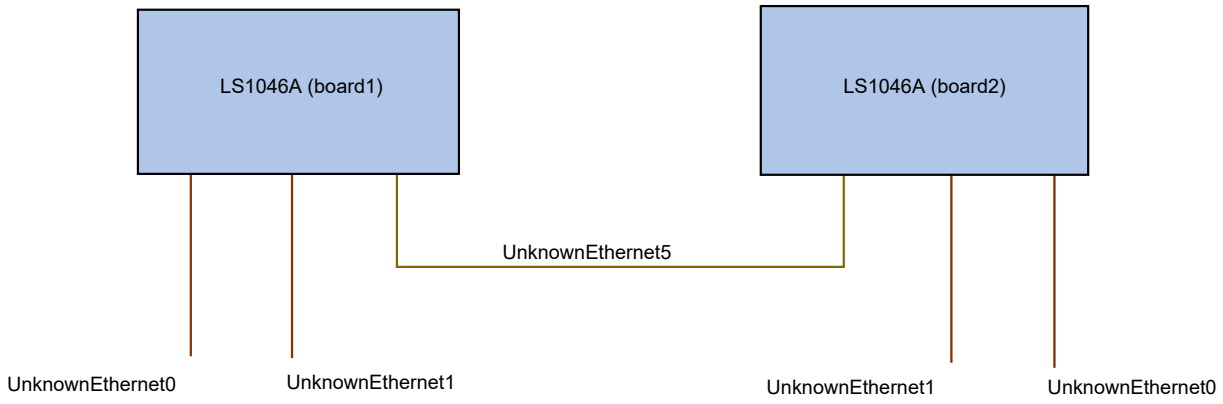

Follow the below instructions and execute commands to reproduce the IPsec numbers:

1. Edit the `/etc/vpp/startup.conf.dpkg-new` file and update the below arguments:
    a. Under cpu section: `workers 3`
    b. Under dpdk section:
        - `num-rx-queues 2`
        - uncomment the `rss { ipv4 }`
2. Execute these commands:

```
vpp -c /etc/vpp/startup.conf.dpkg-new &
vppctl
```

3. Run the below set of commands on board1:

```
ipsec select backend esp 1
set interface ip address UnknownEthernet0 1.1.1.2/24
set interface ip address UnknownEthernet1 10.1.1.2/24
set interface ip address UnknownEthernet5 192.168.100.2/24
set interface state UnknownEthernet0 up
set interface state UnknownEthernet1 up
set interface state UnknownEthernet5 up
ipsec sa add 10 spi 1001 esp crypto-alg aes-cbc-128 crypto-key 4a506a794f574265564551694d653768
integ-alg sha1-96 integ-key 4339314b55523947594d6d3547666b45764e6a58 tunnel-src 192.168.100.2
tunnel-dst 192.168.100.3
ipsec sa add 11 spi 1002 esp crypto-alg aes-cbc-128 crypto-key 4a506a794f574265564551694d653768
integ-alg sha1-96 integ-key 4339314b55523947594d6d3547666b45764e6a58 tunnel-src 192.168.100.3
tunnel-dst 192.168.100.2
ipsec spd add 1
set interface ipsec spd UnknownEthernet5 1
set interface promiscuous on UnknownEthernet5
ipsec policy add spd 1 priority 10 outbound action protect sa 10 local-ip-range 1.1.1.3 -
1.1.1.3 remote-ip-range 2.1.1.3 - 2.1.1.3
ipsec policy add spd 1 priority 10 inbound action protect sa 11 local-ip-range 1.1.1.3 - 1.1.1.3
remote-ip-range 2.1.1.3 - 2.1.1.3
ip route add count 1 2.1.1.3/32 via 192.168.100.3 UnknownEthernet5
set ip arp static UnknownEthernet5 192.168.100.3 00:22:22:22:22:23
set ip arp static UnknownEthernet0 1.1.1.3 00:22:22:22:22:28
ipsec policy add spd 1 priority 100 inbound action bypass protocol 50
ipsec policy add spd 1 priority 100 outbound action bypass protocol 50
```

```
ipsec sa add 40 spi 2001 esp crypto-alg aes-cbc-128 crypto-key 4a506a794f574265564551694d653768
integ-alg sha1-96 integ-key 4339314b55523947594d6d3547666b45764e6a58 tunnel-src 192.168.100.4
tunnel-dst 192.168.100.5
ipsec sa add 41 spi 2002 esp crypto-alg aes-cbc-128 crypto-key 4a506a794f574265564551694d653768
integ-alg sha1-96 integ-key 4339314b55523947594d6d3547666b45764e6a58 tunnel-src 192.168.100.5
tunnel-dst 192.168.100.4
ipsec policy add spd 1 priority 10 outbound action protect sa 40 local-ip-range 1.1.1.3 -
1.1.1.3 remote-ip-range 2.1.1.4 - 2.1.1.4
ipsec policy add spd 1 priority 10 inbound action protect sa 41 local-ip-range 1.1.1.3 - 1.1.1.3
remote-ip-range 2.1.1.4 - 2.1.1.4
ip route add count 1 2.1.1.4/32 via 192.168.100.3 UnknownEthernet5
set ip arp static UnknownEthernet5 192.168.100.5 00:22:22:22:22:33
set ip arp static UnknownEthernet0 1.1.1.4 00:22:22:22:22:38
ipsec sa add 50 spi 3001 esp crypto-alg aes-cbc-128 crypto-key 4a506a794f574265564551694d653768
integ-alg sha1-96 integ-key 4339314b55523947594d6d3547666b45764e6a58 tunnel-src 192.168.100.2
tunnel-dst 192.168.100.3
ipsec sa add 51 spi 3002 esp crypto-alg aes-cbc-128 crypto-key 4a506a794f574265564551694d653768
integ-alg sha1-96 integ-key 4339314b55523947594d6d3547666b45764e6a58 tunnel-src 192.168.100.3
tunnel-dst 192.168.100.2
ipsec policy add spd 1 priority 10 outbound action protect sa 50 local-ip-range 10.1.1.3 -
10.1.1.3 remote-ip-range 20.1.1.3 - 20.1.1.3
ipsec policy add spd 1 priority 10 inbound action protect sa 51 local-ip-range 10.1.1.3 -
10.1.1.3 remote-ip-range 20.1.1.3 - 20.1.1.3
ip route add count 1 20.1.1.3/32 via 192.168.100.3 UnknownEthernet5
set ip arp static UnknownEthernet1 10.1.1.3 00:22:22:22:22:38
ipsec sa add 70 spi 4001 esp crypto-alg aes-cbc-128 crypto-key 4a506a794f574265564551694d653768
integ-alg sha1-96 integ-key 4339314b55523947594d6d3547666b45764e6a58 tunnel-src 192.168.100.4
tunnel-dst 192.168.100.5
ipsec sa add 71 spi 4002 esp crypto-alg aes-cbc-128 crypto-key 4a506a794f574265564551694d653768
integ-alg sha1-96 integ-key 4339314b55523947594d6d3547666b45764e6a58 tunnel-src 192.168.100.5
tunnel-dst 192.168.100.4
ipsec policy add spd 1 priority 10 outbound action protect sa 70 local-ip-range 10.1.1.3 -
10.1.1.3 remote-ip-range 20.1.1.4 - 20.1.1.4
ipsec policy add spd 1 priority 10 inbound action protect sa 71 local-ip-range 10.1.1.3 -
10.1.1.3 remote-ip-range 20.1.1.4 - 20.1.1.4
ip route add count 1 20.1.1.4/32 via 192.168.100.3 UnknownEthernet5
set ip arp static UnknownEthernet1 10.1.1.4 00:22:22:22:22:38
```

4. Run the below set of commands on board2:

```
ipsec select backend esp 1
set interface ip address UnknownEthernet0 2.1.1.2/24
set interface ip address UnknownEthernet1 20.1.1.2/24
set interface ip address UnknownEthernet5 192.168.100.3/24
set interface state UnknownEthernet0 up
set interface state UnknownEthernet1 up
set interface state UnknownEthernet5 up
ipsec sa add 20 spi 1001 esp crypto-alg aes-cbc-128 crypto-key 4a506a794f574265564551694d653768
integ-alg sha1-96 integ-key 4339314b55523947594d6d3547666b45764e6a58 tunnel-src 192.168.100.2
tunnel-dst 192.168.100.3
ipsec sa add 21 spi 1002 esp crypto-alg aes-cbc-128 crypto-key 4a506a794f574265564551694d653768
integ-alg sha1-96 integ-key 4339314b55523947594d6d3547666b45764e6a58 tunnel-src 192.168.100.3
tunnel-dst 192.168.100.2
ipsec spd add 1
set interface ipsec spd UnknownEthernet5 1
set interface promiscuous on UnknownEthernet5
ipsec policy add spd 1 priority 10 inbound action protect sa 20 local-ip-range 2.1.1.3 - 2.1.1.3
remote-ip-range 1.1.1.3 - 1.1.1.3
ipsec policy add spd 1 priority 10 outbound action protect sa 21 local-ip-range 2.1.1.3 -
2.1.1.3 remote-ip-range 1.1.1.3 - 1.1.1.3
```

```
ip route add count 1 1.1.1.3/32 via 192.168.100.2 UnknownEthernet5
set ip arp static UnknownEthernet5 192.168.100.2 00:22:22:22:22:24
set ip arp static UnknownEthernet0 2.1.1.3 00:22:22:22:22:25
ipsec policy add spd 1 priority 100 inbound action bypass protocol 50
ipsec policy add spd 1 priority 100 outbound action bypass protocol 50
ipsec sa add 30 spi 2001 esp crypto-alg aes-cbc-128 crypto-key 4a506a794f5742655645516 94d653768
integ-alg sha1-96 integ-key 4339314b55523947594d6d3547666b45764e6a58 tunnel-src 192.168.100.4
tunnel-dst 192.168.100.5
ipsec sa add 31 spi 2002 esp crypto-alg aes-cbc-128 crypto-key 4a506a794f5742655645516 94d653768
integ-alg sha1-96 integ-key 4339314b55523947594d6d3547666b45764e6a58 tunnel-src 192.168.100.5
tunnel-dst 192.168.100.4
ipsec policy add spd 1 priority 10 inbound action protect sa 30 local-ip-range 2.1.1.3 - 2.1.1.3
remote-ip-range 1.1.1.4 - 1.1.1.4
ipsec policy add spd 1 priority 10 outbound action protect sa 31 local-ip-range 2.1.1.3 -
2.1.1.3 remote-ip-range 1.1.1.4 - 1.1.1.4
ip route add count 1 1.1.1.4/32 via 192.168.100.2 UnknownEthernet5
set ip arp static UnknownEthernet5 192.168.100.4 00:22:22:22:22:44
set ip arp static UnknownEthernet0 2.1.1.4 00:22:22:22:22:55
ipsec sa add 60 spi 3001 esp crypto-alg aes-cbc-128 crypto-key 4a506a794f5742655645516 94d653768
integ-alg sha1-96 integ-key 4339314b55523947594d6d3547666b45764e6a58 tunnel-src 192.168.100.2
tunnel-dst 192.168.100.3
ipsec sa add 61 spi 3002 esp crypto-alg aes-cbc-128 crypto-key 4a506a794f5742655645516 94d653768
integ-alg sha1-96 integ-key 4339314b55523947594d6d3547666b45764e6a58 tunnel-src 192.168.100.3
tunnel-dst 192.168.100.2
ipsec policy add spd 1 priority 10 inbound action protect sa 60 local-ip-range 20.1.1.3 -
20.1.1.3 remote-ip-range 10.1.1.3 - 10.1.1.3
ipsec policy add spd 1 priority 10 outbound action protect sa 61 local-ip-range 20.1.1.3 -
20.1.1.3 remote-ip-range 10.1.1.3 - 10.1.1.3
ip route add count 1 10.1.1.3/32 via 192.168.100.2 UnknownEthernet5
set ip arp static UnknownEthernet1 20.1.1.3 00:22:22:22:22:55
ipsec sa add 80 spi 4001 esp crypto-alg aes-cbc-128 crypto-key 4a506a794f5742655645516 94d653768
integ-alg sha1-96 integ-key 4339314b55523947594d6d3547666b45764e6a58 tunnel-src 192.168.100.4
tunnel-dst 192.168.100.5
ipsec sa add 81 spi 4002 esp crypto-alg aes-cbc-128 crypto-key 4a506a794f5742655645516 94d653768
integ-alg sha1-96 integ-key 4339314b55523947594d6d3547666b45764e6a58 tunnel-src 192.168.100.5
tunnel-dst 192.168.100.4
ipsec policy add spd 1 priority 10 inbound action protect sa 80 local-ip-range 20.1.1.3 -
20.1.1.3 remote-ip-range 10.1.1.4 - 10.1.1.4
ipsec policy add spd 1 priority 10 outbound action protect sa 81 local-ip-range 20.1.1.3 -
20.1.1.3 remote-ip-range 10.1.1.4 - 10.1.1.4
ip route add count 1 10.1.1.4/32 via 192.168.100.2 UnknownEthernet5
set ip arp static UnknownEthernet1 20.1.1.4 00:22:22:22:22:55
```

5. Configure traffic from the Spirent ports as specified below:

Board1				Board2			
Port	Flow	SRC-IP	DEST-IP	Port	Flow	SRC-IP	DEST-IP
Unknown Eth0	1	1.1.1.3	2.1.1.3	Unknown Eth0	1	2.1.1.3	1.1.1.3
	2	1.1.1.3	2.1.1.4		2	2.1.1.3	1.1.1.4
Unknown Eth1	1	10.1.1.3	20.1.1.3	Unknown Eth1	1	20.1.1.3	10.1.1.3
	2	10.1.1.3	20.1.1.4		2	20.1.1.3	10.1.1.4

9.3.8 VPP performance reproducibility guide - LS1088A/LS2088A

IPsec performance reproducibility on LS2088 boards: This setup will use two 10G ports of both boards. One of the 10G ports should be connected to the Spirent whereas another 10g ports of both boards should be connected back-to-back.

Follow the below instructions and execute commands to reproduce the IPsec numbers:

1. Edit the `/etc/vpp/startup.conf.dpkg-new` file and update the below arguments:
   a. Under cpu section: `workers 7`
   b. Under dpdk section:
      - `num-rx-queues 7`
      - uncomment the `rss { ipv4 }`
2. Execute the commands below on both boards:

```
vpp -c /etc/vpp/startup.conf.dpkg-new &
vppctl
```

3. Run the below set of commands on board1:

```
ipsec select backend esp 1
set int ip address TenGigabitEthernet0 1.1.1.2/24
set int ip address TenGigabitEthernet1 192.168.100.2/24
set int state TenGigabitEthernet0 up
set int state TenGigabitEthernet1 up
ipsec sa add 10 spi 1001 esp crypto-alg aes-cbc-128 crypto-key 4a506a794f574265564551694d653768
integ-alg sha1-96 integ-key 4339314b55523947594d6d3547666b45764e6a58 tunnel-src 192.168.100.2
tunnel-dst 192.168.100.3
ipsec sa add 11 spi 1002 esp crypto-alg aes-cbc-128 crypto-key 4a506a794f574265564551694d653768
integ-alg sha1-96 integ-key 4339314b55523947594d6d3547666b45764e6a58 tunnel-src 192.168.100.3
tunnel-dst 192.168.100.2
ipsec spd add 1
set interface ipsec spd TenGigabitEthernet1 1
set interface promiscuous on TenGigabitEthernet1
ipsec policy add spd 1 priority 10 outbound action protect sa 10 local-ip-range 1.1.1.3 -
1.1.1.3 remote-ip-range 2.1.1.3 - 2.1.1.3
ipsec policy add spd 1 priority 10 inbound action protect sa 11 local-ip-range 1.1.1.3 - 1.1.1.3
remote-ip-range 2.1.1.3 - 2.1.1.3
ip route add count 1 2.1.1.3/32 via 192.168.100.3 TenGigabitEthernet1
set ip arp static TenGigabitEthernet1 192.168.100.3 00:22:22:22:22:23
set ip arp static TenGigabitEthernet0 1.1.1.3 00:22:22:22:22:28
ipsec policy add spd 1 priority 100 inbound action bypass protocol 50
```

```
ipsec policy add spd 1 priority 100 outbound action bypass protocol 50

ipsec sa add 40 spi 2001 esp crypto-alg aes-cbc-128 crypto-key 4a506a794f574265564551694d653768
integ-alg sha1-96 integ-key 4339314b55523947594d6d3547666b45764e6a58 tunnel-src 192.168.100.4
tunnel-dst 192.168.100.5
ipsec sa add 41 spi 2002 esp crypto-alg aes-cbc-128 crypto-key 4a506a794f574265564551694d653768
integ-alg sha1-96 integ-key 4339314b55523947594d6d3547666b45764e6a58 tunnel-src 192.168.100.5
tunnel-dst 192.168.100.4
ipsec policy add spd 1 priority 10 outbound action protect sa 40 local-ip-range 1.1.1.4 -
1.1.1.4 remote-ip-range 2.1.1.4 - 2.1.1.4
ipsec policy add spd 1 priority 10 inbound action protect sa 41 local-ip-range 1.1.1.4 - 1.1.1.4
remote-ip-range 2.1.1.4 - 2.1.1.4
ip route add count 1 2.1.1.4/32 via 192.168.100.3 TenGigabitEthernet1
set ip arp static TenGigabitEthernet1 192.168.100.5 00:22:22:22:22:33
set ip arp static TenGigabitEthernet0 1.1.1.4 00:22:22:22:22:38

ipsec sa add 50 spi 3001 esp crypto-alg aes-cbc-128 crypto-key 4a506a794f574265564551694d653768
integ-alg sha1-96 integ-key 4339314b55523947594d6d3547666b45764e6a58 tunnel-src 192.168.100.6
tunnel-dst 192.168.100.7
ipsec sa add 51 spi 3002 esp crypto-alg aes-cbc-128 crypto-key 4a506a794f574265564551694d653768
integ-alg sha1-96 integ-key 4339314b55523947594d6d3547666b45764e6a58 tunnel-src 192.168.100.39
tunnel-dst 192.168.100.38
ipsec policy add spd 1 priority 10 outbound action protect sa 50 local-ip-range 1.1.1.5 -
1.1.1.5 remote-ip-range 2.1.1.5 - 2.1.1.5
ipsec policy add spd 1 priority 10 inbound action protect sa 51 local-ip-range 1.1.1.5 - 1.1.1.5
remote-ip-range 2.1.1.5 - 2.1.1.5
ip route add count 1 2.1.1.5/32 via 192.168.100.3 TenGigabitEthernet1
set ip arp static TenGigabitEthernet1 192.168.100.7 00:22:22:22:22:33
set ip arp static TenGigabitEthernet0 1.1.1.5 00:22:22:22:22:38

ipsec sa add 70 spi 4001 esp crypto-alg aes-cbc-128 crypto-key 4a506a794f574265564551694d653768
integ-alg sha1-96 integ-key 4339314b55523947594d6d3547666b45764e6a58 tunnel-src 192.168.100.8
tunnel-dst 192.168.100.9
ipsec sa add 71 spi 4002 esp crypto-alg aes-cbc-128 crypto-key 4a506a794f574265564551694d653768
integ-alg sha1-96 integ-key 4339314b55523947594d6d3547666b45764e6a58 tunnel-src 192.168.100.9
tunnel-dst 192.168.100.8
ipsec policy add spd 1 priority 10 outbound action protect sa 70 local-ip-range 1.1.1.9 -
1.1.1.9 remote-ip-range 2.1.1.9 - 2.1.1.9
ipsec policy add spd 1 priority 10 inbound action protect sa 71 local-ip-range 1.1.1.8 - 1.1.1.8
remote-ip-range 2.1.1.8 - 2.1.1.8
ip route add count 1 2.1.1.9/32 via 192.168.100.3 TenGigabitEthernet1
set ip arp static TenGigabitEthernet1 192.168.100.9 00:22:22:22:22:33
set ip arp static TenGigabitEthernet0 1.1.1.8 00:22:22:22:22:38

ipsec sa add 90 spi 5001 esp crypto-alg aes-cbc-128 crypto-key 4a506a794f574265564551694d653768
integ-alg sha1-96 integ-key 4339314b55523947594d6d3547666b45764e6a58 tunnel-src 192.168.100.14
tunnel-dst 192.168.100.15
ipsec sa add 91 spi 5002 esp crypto-alg aes-cbc-128 crypto-key 4a506a794f574265564551694d653768
integ-alg sha1-96 integ-key 4339314b55523947594d6d3547666b45764e6a58 tunnel-src 192.168.100.11
tunnel-dst 192.168.100.10
ipsec policy add spd 1 priority 10 outbound action protect sa 90 local-ip-range 1.1.1.11 -
1.1.1.11 remote-ip-range 2.1.1.11 - 2.1.1.11
ipsec policy add spd 1 priority 10 inbound action protect sa 91 local-ip-range 1.1.1.11 -
1.1.1.11 remote-ip-range 2.1.1.11 - 2.1.1.11
ip route add count 1 2.1.1.11/32 via 192.168.100.3 TenGigabitEthernet1
set ip arp static TenGigabitEthernet1 192.168.100.15 00:22:22:22:22:33
set ip arp static TenGigabitEthernet0 1.1.1.11 00:22:22:22:22:38

ipsec sa add 110 spi 6001 esp crypto-alg aes-cbc-128 crypto-key 4a506a794f574265564551694d653768
integ-alg sha1-96 integ-key 4339314b55523947594d6d3547666b45764e6a58 tunnel-src 192.168.100.18
```

```
tunnel-dst 192.168.100.19
ipsec sa add 111 spi 6002 esp crypto-alg aes-cbc-128 crypto-key 4a506a794f5742655645516 94d653768
integ-alg sha1-96 integ-key 4339314b55523947594d6d3547666b45764e6a58 tunnel-src 192.168.100.13
tunnel-dst 192.168.100.12
ipsec policy add spd 1 priority 10 outbound action protect sa 110 local-ip-range 1.1.1.13 -
1.1.1.13 remote-ip-range 2.1.1.13 - 2.1.1.13
ipsec policy add spd 1 priority 10 inbound action protect sa 111 local-ip-range 1.1.1.18 -
1.1.1.18 remote-ip-range 2.1.1.18 - 2.1.1.18
ip route add count 1 2.1.1.13/32 via 192.168.100.3 TenGigabitEthernet1
set ip arp static TenGigabitEthernet1 192.168.100.19 00:22:22:22:22:33
set ip arp static TenGigabitEthernet0 1.1.1.18 00:22:22:22:22:38

ipsec sa add 130 spi 7001 esp crypto-alg aes-cbc-128 crypto-key 4a506a794f5742655645516 94d653768
integ-alg sha1-96 integ-key 4339314b55523947594d6d3547666b45764e6a58 tunnel-src 192.168.100.22
tunnel-dst 192.168.100.23
ipsec sa add 131 spi 7002 esp crypto-alg aes-cbc-128 crypto-key 4a506a794f5742655645516 94d653768
integ-alg sha1-96 integ-key 4339314b55523947594d6d3547666b45764e6a58 tunnel-src 192.168.100.31
tunnel-dst 192.168.100.30
ipsec policy add spd 1 priority 10 outbound action protect sa 130 local-ip-range 1.1.1.22 -
1.1.1.22 remote-ip-range 2.1.1.22 - 2.1.1.22
ipsec policy add spd 1 priority 10 inbound action protect sa 131 local-ip-range 1.1.1.22 -
1.1.1.22 remote-ip-range 2.1.1.22 - 2.1.1.22
ip route add count 1 2.1.1.22/32 via 192.168.100.3 TenGigabitEthernet1
set ip arp static TenGigabitEthernet1 192.168.100.23 00:22:22:22:22:33
set ip arp static TenGigabitEthernet0 1.1.1.22 00:22:22:22:22:38
```

4. Run the below set of commands on board2:

```
ipsec select backend esp 1
set int ip address TenGigabitEthernet0 2.1.1.2/24
set int ip address TenGigabitEthernet1 192.168.100.3/24
set int state TenGigabitEthernet0 up
set int state TenGigabitEthernet1 up
ipsec sa add 20 spi 1001 esp crypto-alg aes-cbc-128 crypto-key 4a506a794f5742655645516 94d653768
integ-alg sha1-96 integ-key 4339314b55523947594d6d3547666b45764e6a58 tunnel-src 192.168.100.2
tunnel-dst 192.168.100.3
ipsec sa add 21 spi 1002 esp crypto-alg aes-cbc-128 crypto-key 4a506a794f5742655645516 94d653768
integ-alg sha1-96 integ-key 4339314b55523947594d6d3547666b45764e6a58 tunnel-src 192.168.100.3
tunnel-dst 192.168.100.2
ipsec spd add 1
set interface ipsec spd TenGigabitEthernet1 1
set interface promiscuous on TenGigabitEthernet1
ipsec policy add spd 1 priority 10 inbound action protect sa 20 local-ip-range 2.1.1.3 - 2.1.1.3
remote-ip-range 1.1.1.3 - 1.1.1.3
ipsec policy add spd 1 priority 10 outbound action protect sa 21 local-ip-range 2.1.1.3 -
2.1.1.3 remote-ip-range 1.1.1.3 - 1.1.1.3
ip route add count 1 1.1.1.3/32 via 192.168.100.2 TenGigabitEthernet1
set ip arp static TenGigabitEthernet1 192.168.100.2 00:22:22:22:22:24
set ip arp static TenGigabitEthernet0 2.1.1.3 00:22:22:22:22:25
ipsec policy add spd 1 priority 100 inbound action bypass protocol 50
ipsec policy add spd 1 priority 100 outbound action bypass protocol 50

ipsec sa add 30 spi 2001 esp crypto-alg aes-cbc-128 crypto-key 4a506a794f5742655645516 94d653768
integ-alg sha1-96 integ-key 4339314b55523947594d6d3547666b45764e6a58 tunnel-src 192.168.100.4
tunnel-dst 192.168.100.5
ipsec sa add 31 spi 2002 esp crypto-alg aes-cbc-128 crypto-key 4a506a794f5742655645516 94d653768
integ-alg sha1-96 integ-key 4339314b55523947594d6d3547666b45764e6a58 tunnel-src 192.168.100.5
tunnel-dst 192.168.100.4
ipsec policy add spd 1 priority 10 inbound action protect sa 30 local-ip-range 2.1.1.4 - 2.1.1.4
remote-ip-range 1.1.1.4 - 1.1.1.4
```

```
ipsec policy add spd 1 priority 10 outbound action protect sa 31 local-ip-range 2.1.1.4 -
2.1.1.4 remote-ip-range 1.1.1.4 - 1.1.1.4
ip route add count 1 1.1.1.4/32 via 192.168.100.2 TenGigabitEthernet1
set ip arp static TenGigabitEthernet1 192.168.100.4 00:22:22:22:22:44
set ip arp static TenGigabitEthernet0 2.1.1.4 00:22:22:22:22:55

ipsec sa add 60 spi 3001 esp crypto-alg aes-cbc-128 crypto-key 4a506a794f574265564551694d653768
integ-alg sha1-96 integ-key 4339314b55523947594d6d3547666b45764e6a58 tunnel-src 192.168.100.6
tunnel-dst 192.168.100.7
ipsec sa add 61 spi 3002 esp crypto-alg aes-cbc-128 crypto-key 4a506a794f574265564551694d653768
integ-alg sha1-96 integ-key 4339314b55523947594d6d3547666b45764e6a58 tunnel-src 192.168.100.39
tunnel-dst 192.168.100.38
ipsec policy add spd 1 priority 10 inbound action protect sa 60 local-ip-range 2.1.1.5 - 2.1.1.5
remote-ip-range 1.1.1.5 - 1.1.1.5
ipsec policy add spd 1 priority 10 outbound action protect sa 61 local-ip-range 2.1.1.5 -
2.1.1.5 remote-ip-range 1.1.1.5 - 1.1.1.5
ip route add count 1 1.1.1.5/32 via 192.168.100.2 TenGigabitEthernet1
set ip arp static TenGigabitEthernet1 192.168.100.38 00:22:22:22:22:44
set ip arp static TenGigabitEthernet0 2.1.1.5 00:22:22:22:22:55

ipsec sa add 80 spi 4001 esp crypto-alg aes-cbc-128 crypto-key 4a506a794f574265564551694d653768
integ-alg sha1-96 integ-key 4339314b55523947594d6d3547666b45764e6a58 tunnel-src 192.168.100.8
tunnel-dst 192.168.100.9
ipsec sa add 81 spi 4002 esp crypto-alg aes-cbc-128 crypto-key 4a506a794f574265564551694d653768
integ-alg sha1-96 integ-key 4339314b55523947594d6d3547666b45764e6a58 tunnel-src 192.168.100.9
tunnel-dst 192.168.100.8
ipsec policy add spd 1 priority 10 inbound action protect sa 80 local-ip-range 2.1.1.9 - 2.1.1.9
remote-ip-range 1.1.1.9 - 1.1.1.9
ipsec policy add spd 1 priority 10 outbound action protect sa 81 local-ip-range 2.1.1.8 -
2.1.1.8 remote-ip-range 1.1.1.8 - 1.1.1.8
ip route add count 1 1.1.1.8/32 via 192.168.100.2 TenGigabitEthernet1
set ip arp static TenGigabitEthernet1 192.168.100.8 00:22:22:22:22:44
set ip arp static TenGigabitEthernet0 2.1.1.9 00:22:22:22:22:55

ipsec sa add 100 spi 5001 esp crypto-alg aes-cbc-128 crypto-key 4a506a794f574265564551694d653768
integ-alg sha1-96 integ-key 4339314b55523947594d6d3547666b45764e6a58 tunnel-src 192.168.100.14
tunnel-dst 192.168.100.15
ipsec sa add 101 spi 5002 esp crypto-alg aes-cbc-128 crypto-key 4a506a794f574265564551694d653768
integ-alg sha1-96 integ-key 4339314b55523947594d6d3547666b45764e6a58 tunnel-src 192.168.100.11
tunnel-dst 192.168.100.10
ipsec policy add spd 1 priority 10 inbound action protect sa 100 local-ip-range 2.1.1.11 -
2.1.1.11 remote-ip-range 1.1.1.11 - 1.1.1.11
ipsec policy add spd 1 priority 10 outbound action protect sa 101 local-ip-range 2.1.1.11 -
2.1.1.11 remote-ip-range 1.1.1.11 - 1.1.1.11
ip route add count 1 1.1.1.11/32 via 192.168.100.2 TenGigabitEthernet1
set ip arp static TenGigabitEthernet1 192.168.100.10 00:22:22:22:22:44
set ip arp static TenGigabitEthernet0 2.1.1.11 00:22:22:22:22:55

ipsec sa add 120 spi 6001 esp crypto-alg aes-cbc-128 crypto-key 4a506a794f574265564551694d653768
integ-alg sha1-96 integ-key 4339314b55523947594d6d3547666b45764e6a58 tunnel-src 192.168.100.18
tunnel-dst 192.168.100.19
ipsec sa add 121 spi 6002 esp crypto-alg aes-cbc-128 crypto-key 4a506a794f574265564551694d653768
integ-alg sha1-96 integ-key 4339314b55523947594d6d3547666b45764e6a58 tunnel-src 192.168.100.13
tunnel-dst 192.168.100.12
ipsec policy add spd 1 priority 10 inbound action protect sa 120 local-ip-range 2.1.1.13 -
2.1.1.13 remote-ip-range 1.1.1.13 - 1.1.1.13
ipsec policy add spd 1 priority 10 outbound action protect sa 121 local-ip-range 2.1.1.18 -
2.1.1.18 remote-ip-range 1.1.1.18 - 1.1.1.18
ip route add count 1 1.1.1.18/32 via 192.168.100.2 TenGigabitEthernet1
set ip arp static TenGigabitEthernet1 192.168.100.12 00:22:22:22:22:44
```

```
set ip arp static TenGigabitEthernet0 2.1.1.13 00:22:22:22:22:55

ipsec sa add 140 spi 7001 esp crypto-alg aes-cbc-128 crypto-key 4a506a794f57426556455169 4d653768
integ-alg sha1-96 integ-key 4339314b55523947594d6d3547666b45764e6a58 tunnel-src 192.168.100.22
tunnel-dst 192.168.100.23
ipsec sa add 141 spi 7002 esp crypto-alg aes-cbc-128 crypto-key 4a506a794f57426556455169 4d653768
integ-alg sha1-96 integ-key 4339314b55523947594d6d3547666b45764e6a58 tunnel-src 192.168.100.31
tunnel-dst 192.168.100.30
ipsec policy add spd 1 priority 10 inbound action protect sa 140 local-ip-range 2.1.1.22 -
2.1.1.22 remote-ip-range 1.1.1.22 - 1.1.1.22
ipsec policy add spd 1 priority 10 outbound action protect sa 141 local-ip-range 2.1.1.22 -
2.1.1.22 remote-ip-range 1.1.1.22 - 1.1.1.22
ip route add count 1 1.1.1.22/32 via 192.168.100.2 TenGigabitEthernet1
set ip arp static TenGigabitEthernet1 192.168.100.30 00:22:22:22:22:44
set ip arp static TenGigabitEthernet0 2.1.1.22 00:22:22:22:22:55
```

5. Configure traffic from the Spirent ports as specified below:

Board1				Board2			
Port	Flow	SRC-IP	DEST-IP	Port	Flow	SRC-IP	DEST-IP
TenGigabitEthernet0/ <Spirent Port1>	1	1.1.1.3	2.1.1.3	TenGigabitEthernet0/ <Spirent port2>	1	2.1.1.3	1.1.1.3
	2	1.1.1.4	2.1.1.4		2	2.1.1.4	1.1.1.4
	3	1.1.1.5	2.1.1.5		3	2.1.1.5	1.1.1.5
	4	1.1.1.9	2.1.1.9		4	2.1.1.8	1.1.1.8
	5	1.1.1.11	2.1.1.11		5	2.1.1.11	1.1.1.11
	6	1.1.1.13	2.1.1.13		6	2.1.1.18	1.1.1.18
	7	1.1.1.22	2.1.1.22		7	2.1.1.22	1.1.1.22

9.4 USDPAA

USDPAA is no longer supported as an API for direct customer use. All non-NXP software should use one of the standard APIs, DPDK instead of USDPAA. Some of the USDPAA software components may still exist as a layer below other software components such as DPDK, but do not assume that this will continue in future software releases.

Chapter 10
Virtualization

10.1 KVM/QEMU

10.1.1 KVM/QEMU Overview

This document is a guide and tutorial to building and using KVM (Kernel-based Virtual Machine) on NXP QorIQ SoCs.

Virtualization provides an environment that enables running multiple operating systems on a single computer system. Virtualization uses hardware and software technologies together to enable this by providing an abstraction layer between system hardware and the OS. The isolated environment in which OSes run is known as a *virtual machine* (or VM). The abstraction layer that manages all this is referred to as a *hypervisor or virtual machine manager*. The hypervisor layer operates at a privilege level higher than that of the operating systems, thus enabling it to enforce system security, ensure that virtual machines cannot interfere with each other, and transparently provide other services such as I/O sharing to the VM.

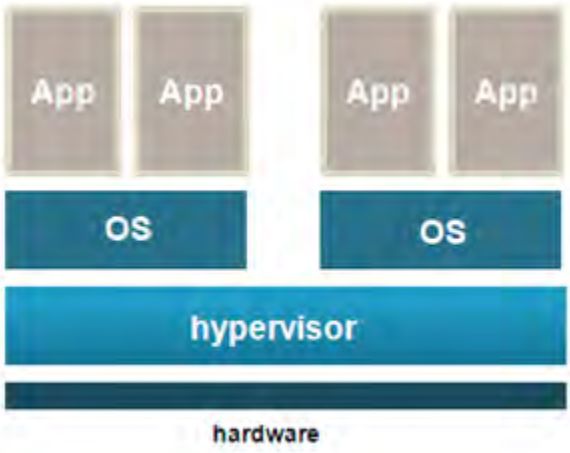

Figure 235.

KVM is a Linux kernel driver that together with QEMU, an open source machine emulator, provides an open source virtualization platfiorm based on Linux. KVM and QEMU together act as a virtual machine manager that can boot and run operating systems in virtual machines. See Figure below.

In this document the term *host* kernel refers to the underlying instance of Linux with the KVM driver that acts as the hypervisor. The term *guest* refers to the operating system, such as Linux, that runs in a virtual machine. A virtual machine will be referred to as a "VM".

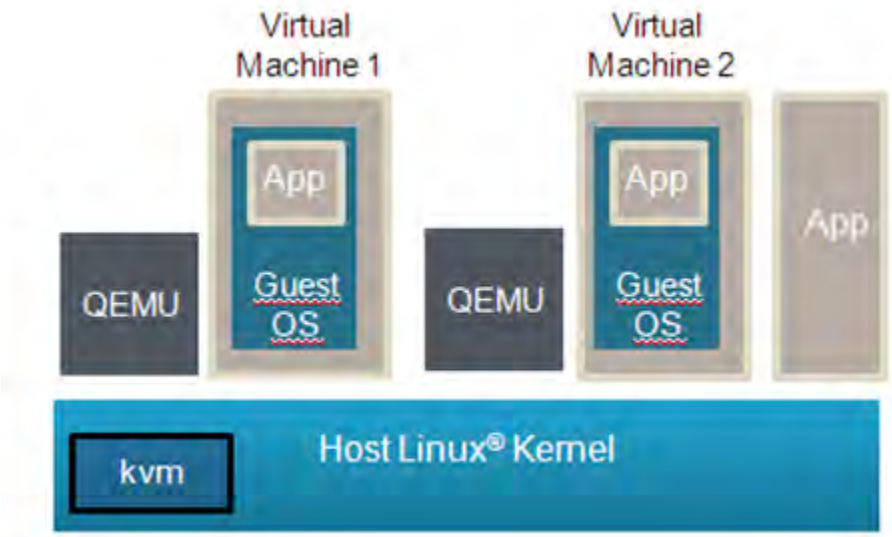

Figure 236.

NXP QorIQ SoCs based on Arm v7 and Arm v8 CPUs are supported.

10.1.1.1 Using QEMU and KVM

10.1.1.1.1 Overview of Using QEMU

QEMU is used to start virtual machines. The QEMU application is named **qemu-system-arm** (for 32 bit platforms) or **qemu-system-aarch64** (for 64 bit platforms).

In addition to the QEMU executable itself, the following is a list of the minimum components that must be available on the target system to launch a virtual machine using QEMU:

- The host Linux kernel on the target must be built with virtualization support for KVM enabled .
- A guest OS kernel image (e.g. zImage or Image for Linux)
- A guest root filesystem (If needed by the guest OS. For example, a Linux guest requires a rootfs.)
- Recommended: A working network interface (to interface to the guest's console and the QEMU monitor)

The QEMU Emulator User Documentation [1] (see References) contains complete documentation for all QEMU command line arguments. The Table below summarizes some of the flags and arguments for basic operation.

Table 185.

Argument	Descriptions
-enable-kvm	Specifies that the Linux KVM should be used for the virtual machine's CPUs
-nographic	Disables graphical output-console will be on emulated serial port.
-M *machine*	Specifies the type of virtual machine. One value is supported: • virt
-smp *cpu_count*	Specifies the number of CPUs for the virtual machine.

Table continues on the next page...

Table 185. (continued)

Argument	Descriptions
	The number of virtual CPUs allowed is the same as the value of the CONFIG_NR_CPUS config option in the host Linux kernel. To see this value issue the following command from Linux on the target board: `zcat /proc/config.gz | grep NR_CPUS`
-kernel *file*	Specifies the guest OS image. The supported image types are in *Image* format (the generic Linux kernel binary image file) and *zImage* (a compressed version of the Linux kernel image)
-initrd *file*	Specifies a root filesystem image
-append *cmdline*	Use *cmdline* as the guest OS kernel command line (passed in the bootargs property of the /chosen node in the guest device tree)
-serial *dev*	Redirects the virtual serial port to the host device *dev*. QEMU supports many possible host devices. Please refer to the QEMU User Documentation [1] (see References) for complete details. Note: if using a tcp device with the **server** option QEMU will wait for a connection to the device before continuing unless the **nowait** option is used.
-m *megs*	Specifies the size of the VM's RAM in megabytes. This option is ignored if using direct mapped memory. See Virtual Machine Memory for further details on options for allocating memory.
-mem-path *path*	Specifies the path to a file from which to allocate memory for the virtual machine. This option should be used to allocate memory from hugetlbfs. See Virtual Machine Memory for further details on options for allocating memory.
-monitor *dev*	Redirects the QEMU monitor to the host device *dev*. QEMU supports many possible host devices. Please refer to the QEMU User Documentation [1] (see References) for complete details. Note: if using a tcp device with the **server** option QEMU will wait for a connection to the device before continuing unless the **nowait** option is used.
-S	Do not start CPU at startup (you must type 'c' in the monitor). This can be useful if debugging.
-gdb *dev*	Wait for gdb connection on device dev
-drive *[args]*	Used to create a virtual disk in a virtual machine. See Virtual block devices for additional information.
-netdev *[args]* -device virtio-net-device *[args]*	The -netdev and -device virtio-net-device arguments specify the network backend and front end for createing virtual network devices in virtual machines. See Virtual network interfaces for additional information.

Table continues on the next page...

Table 185. (continued)

Argument	Descriptions
-cpu *model*	Select CPU model. Only one model is supported: • host

Below is an example command line a user would run from the host Linux to start virt virtual machine booting a Linux guest:

```
qemu-system-aarch64 -smp 8 -m 1024 -cpu host -machine type=virt,gic-version=3
-kernel /boot/Image -enable-kvm -display none -serial tcp::4446,server,telnet -
drive if=none,file=ubuntu_bionic_arm64_rootfs.ext4.img,id=foo,format=raw -device virtio-blk-
device,drive=foo -append 'root=/dev/vda rw console=ttyAMA0 rootwait earlyprintk' -monitor stdio
```

10.1.1.1.2 Virtual Machine Memory

QEMU allocates and loads images into a VM's memory prior to starting the VM. The amount of memory needed for a virtual machine will be dependent on the workload to be run in the VM. There are two ways to allocate memory:

1. Allocation via hugetlbfs

   Hugetlbfs is a Linux mechanism that allows applications to allocate memory backed large physically contiguous regions of memory. QEMU can take advantage of hugetlbfs for allocation of memory for virtual machines, which can provide a significant performance improvement over malloc allocated memory. Hugetlbfs allocated memory provides the flexibility of memory that can be allocated and freed with performance comparable to direct mapped memory.

   The **-mem-path** argument to QEMU specifies the path to the hugetlbfs mount point where the huge pages should be allocated from.

   The **-m** argument to QEMU specifies the amount of memory to allocate to the virtual machine. There are no constraints on the size passed to this argument other than that the amount of memory must fit within the constraints of the system and be enough for the workload in the VM.

   See the how-to article Quick-start Steps to Run KVM Using Hugetlbfs for an example of how to use hugetlbfs.

2. Allocation via malloc

   The default for QEMU is to allocate guest memory by the standard malloc facility available to user space applications in Linux. The amount of memory is specified with the -m command line argument. Malloc'ed memory has the flexibility of being allocated and freed by QEMU as needed. However, malloc'ed memory is backed by 4KB physical pages that are not contiguous and emulation is required by KVM to present a contiguous guest physical memory region to the VM. This approach is discouraged since the emulation can result in a substantial performance penalty for certain workloads.

The guest device tree generated by QEMU will contain a memory node that specifies the total amount of memory.

NOTE

A virtual machine's memory is part of the address space of the QEMU process. This means that the amount of memory allocated to a VM is limited by the standard limits that exist for Linux processes. A 32-bit host kernel has a 2GiB virtual address space used for stack, text, and other data, and this limits the amount of memory that can be allocated to a VM.

10.1.1.1.3 Virtual network interfaces

QEMU provides a number of options for creating virtual network interfaces in virtual machines. Virtual network interfaces are specified using the QEMU command line and guest software sees them as memory mapped devices.

There are two aspects of virtual network interfaces with QEMU:

1. The network “front-end”, which is the network card as seen by the guest. This is specified with the **-device** QEMU argument. The argument to specify a virtio network front end would look like: **-device virtio-net-pci**
2. The network "backend", which connects the network card to some network. Network backend options include user mode networking, a host TAP interface, sockets, or virtual distributed Ethernet. The network backend is specified using the **-netdev** command line argument of QEMU. Note: It is possible to connect two virtual machines using virtual network interfaces. Normally QEMU userspace process emulates I/O accesses from the guest. However, there is an in-kernel implementation: *vhost-net* which puts the data plane emulation code into the kernel.

For example, to use a virtio NIC card with a TAP interface back-end the QEMU command line argument would look like:

```
-netdev tap,id=tap0,script=/root/qemu-ifup -device virtio-net-pci,netdev=tap0
```

The script “/root/qemu-ifup” is a script that QEMU invokes and passes the TAP interface name as an argument. For example, the script could add the TAP interface to an Ethernet bridge.

See the QEMU Users Manual [1] (see References) for detailed information about command line options and the types of network interfaces and backends. For best performance, the virtio front-end is recommended.

For additional information about QEMU networking see the references in For More Information.

For a detailed example, see the how-to article How to Use Virtual Network Interfaces Using Virtio .

10.1.1.1.4 Virtual block devices

There are a number of approaches to provide a virtual disk to a KVM/QEMU virtual machine. A guest disk image can be a single raw file on the host filesystem, a file in a virtual disk format such as qcow2 and vdi, or a block device on the host Linux system. The virtual disk is assigned on the QEMU command line. In the example below, the file **my_guest_disk** is a disk image and is assigned to the VM when QEMU is launched: `-drive file=my_guest_disk,cache=none,if=virtio`

Refer to the QEMU Users manual [1] (see References) for details on the types of virtual disk images that may be created and the related arguments to QEMU.

QEMU allows for various storing caching attributes to be set for the guest. The cache option is specified with `cache=` property. The following options are supported:

- `writethrough`: The host page cache is used, but the data is written to the physical device. This mode ensures data integrety.
- `writeback`: This is the default mode (when the cache property is missing). The host page cache is used, the normal page cache management will handle the write to the storage device.
- `none`: The host page cache is bypassed, the guests writes go directly to the storage device. The storage device may have a write cache.
- `directsync`: The host page cache is bypassed and the data is written to the physical device.
- `unsafe`: The flush commands to ensure the data integrity are ignored.

For a detailed example, see How to use **Virtual Disks Using Virtio**.

10.1.1.1.5 Direct assigned devices

VFIO - Virtual Function I/O

The VFIO is a Linux userspace driver infrastructure, an IOMMU/device agnostic framework for exposing direct device access from userspace. For the highest possible I/O performance, virtual machines make use of direct device access, called also *device assignment*. From a host and device perspenctive, the VFIO framework turns the virtual machines - QEMU - into a userspace driver, with the benefits of significantly reduced latency and direct use of device drivers.

The VFIO framework provides:

- device access
- IOMMU programming interface

- high performance interrupt support

Furthermore, the VFIO framework supports several bus infrastructures, such as PCI, platform devices and also the LS2 MC bus. In the following paragraphs both PCI and LS2 MC bus infrastructure support will be presented.

VFIO PCI

The VFIO driver abstracts PCI devices as regions and IRQs. The *regions* component includes the PCI configuration space, MMIO and I/O port BAR spaces and MMIO PCI ROM access, while the *IRQs* include INTx, legacy interrupts, but also Message Signaled Interrupts.

One can follow the Control path, Data path and IRQ path through a VFIO PCI infrastructure in the below image. Also, more information on how to use the PCI Direct Assignment feature can be found in the How to use PCIE direct assignment chapter.

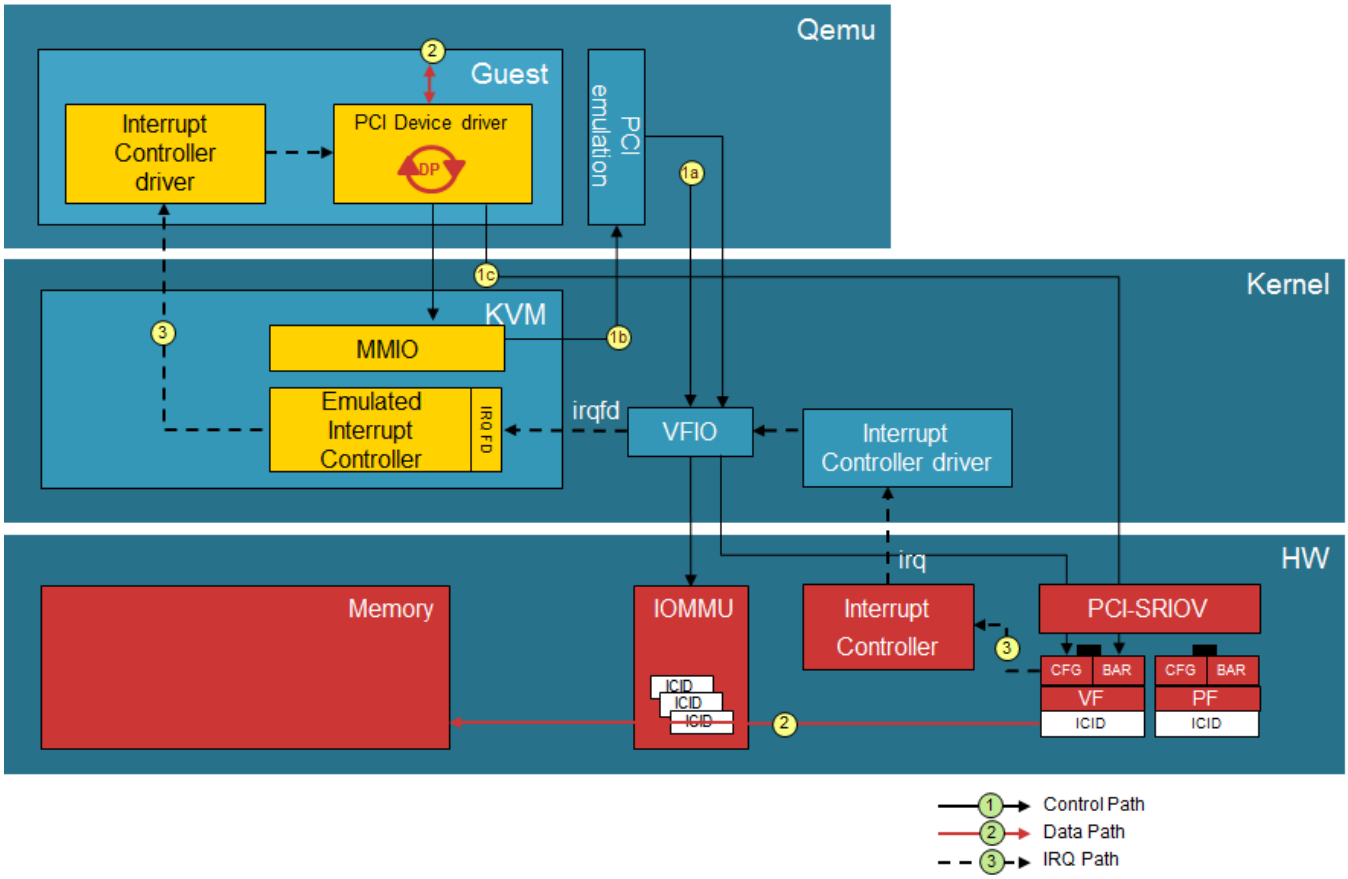

VFIO for LS2 MC Bus

The DPAA2 architecture works with the concept of MC containers - DPRCs. From the point of view of the OS, a DPRC behaves similar to a plug and play bus, like PCI. DPRC commands can be used to enumerate the contents of the DPRC and discover the hardware objects present (includin mappable regions and interrupts). The VFIO infrastructure for the FSL MC Bus can be found below.

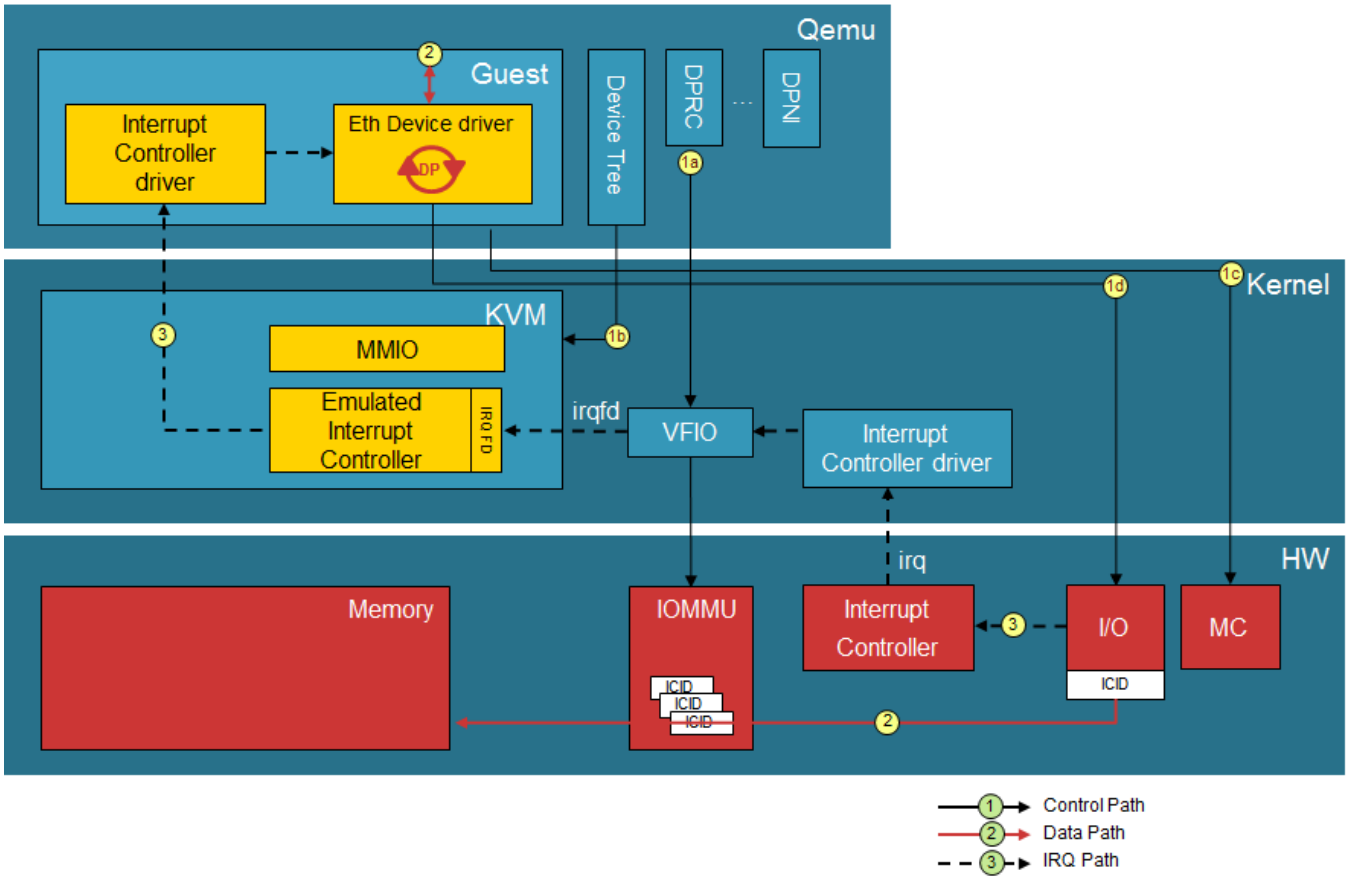

The root container always belongs to the Linux host, while any child container can be assigned to user-space applications such as DPDK or virtual machines - QEMU. In the context of *direct device assignment*, this means that any DPAA2 object that needs to be made available to a guest VM should be places in a child container and, furthermore, the child container should be bound to the VFIO FSL MC driver. One can find more on how to use this feature in the How to use DPAA2 direct assignment without scripts chapter.

10.1.1.1.6 VMs and the Linux Scheduler

Each virtual machine appears to the host Linux as a process with each virtual CPU in the VM implemented as a thread. A VM appears as an instance of QEMU when looking at Linux processes as can be seen in the example below:

```
$ ps -ef
                o
                o
root      1333     1  0 Oct01 ttyS0 00:00:00       -sh
root      1336     2  0 08:24 ?        00:00:00    [kworker/u4:2]
root      1372  1333 18 08:27 ttyS0    00:00:17    qemu-system-arm   -enable-kvm -m
root      1361  1304  0 08:28 ?        00:00:00    sshd: root@pts/0
root      1363  1361  0 08:28 pts/0    00:00:00    -sh
                o
                o
```

CPUs appear as threads. To see thread IDs use the `info cpus` command in the QEMU monitor. Example of a VM with 8 virtual CPUs:

```
(qemu) info cpus
* CPU #0: thread_id=1984
  CPU #1: (halted) thread_id=1985
  CPU #2: (halted) thread_id=1986
  CPU #3: (halted) thread_id=1987
  CPU #4: (halted) thread_id=1988
  CPU #5: (halted) thread_id=1989
  CPU #6: (halted) thread_id=1990
  CPU #7: (halted) thread_id=1991
```

To see the QEMU threads using the ps command:

```
root@ls_machine:~# ps -eL | grep qemu
 1981  1981 ttyS1    00:00:00 qemu-system-aar
 1981  1982 ttyS1    00:00:00 qemu-system-aar
 1981  1983 ttyS1    00:00:00 qemu-system-aar
 1981  1984 ttyS1    00:00:00 qemu-system-aar
 1981  1985 ttyS1    00:00:00 qemu-system-aar
 1981  1986 ttyS1    00:00:00 qemu-system-aar
 1981  1987 ttyS1    00:00:00 qemu-system-aar
 1981  1988 ttyS1    00:00:00 qemu-system-aar
 1981  1989 ttyS1    00:00:00 qemu-system-aar
 1981  1990 ttyS1    00:00:00 qemu-system-aar
 1981  1991 ttyS1    00:00:00 qemu-system-aar
```

Being a Linux thread means that standard Linux mechanisms can be used to control aspects of how the threads are scheduled relative to other threads/processes. These mechanisms include:

- process priority
- CPU affinity
- isolcpus
- cgroups

10.1.1.2 Virtual Machine Overview

A guest OS running in a KVM/QEMU virtual machine "sees" a hardware environment similar to running on a physical board. The guest sees CPUs, memory, and a number of I/O devices. Some aspects of this environment are virtualized (emulated in software by KVM/QEMU) but this virtualization is mostly transparent to the guest, and changes to the guest are typically not required to run in a virtual machine.

The number of virtual machines that can be run simultaneously is only limited by the amount of available resources (like any other application on Linux).

KVM/QEMU implements a generic virt machine which is described completely by the device tree. The virtual machine contains the following resources:

- one or more Arm-v7/Arm-v8 virtual CPUs
- memory
- virtual console based on an emulated PL011
- virtio over PCI (used for virtual devices such as block and network devices)
- Arm Virtual Generic Interrupt Controller

- Arm virtual timer and counter

10.1.1.3 Introduction to KVM and QEMU

QEMU (pronounced KYOO-em-yoo) is a software-based machine emulator that emulates a variety of CPUs and hardware systems. KVM is a Linux kernel device driver that provides virtual CPU services to QEMU. The two software components work together as a virtual machine manager.

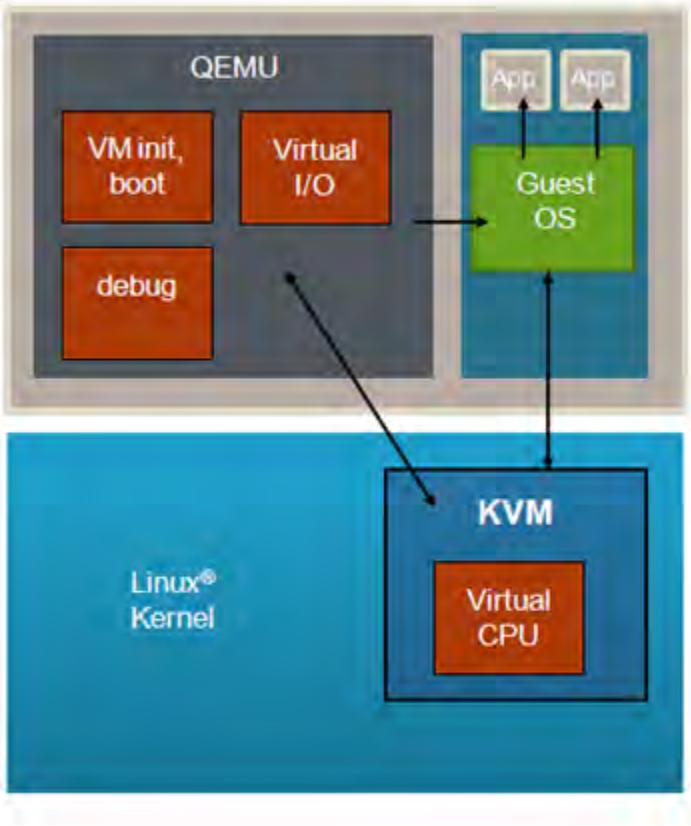

Figure 237.

QEMU is a Linux user-space application that runs on the host Linux instance and is used to start and manage a virtual machine. QEMU provides the following:

- A command line interface that provides extensive customization and configuration of a virtual machine when it is started-- e.g. type of VM, which images to load, and how virtual devices are configured
- Loading of all images needed by the guest-- e.g kernel images, root filesystem, guest device tree
- Setting the initial state of the VM and booting the guest
- Virtual I/O services, such as virtual network interfaces and virtual disks
- Debug services-which provide the capability to debug a guest OS using GDB (similar to a virtual JTAG)

KVM is a device driver in the Linux kernel whose key role in the VM architecture is to provide virtual CPU services. These services involve two aspects:

1. First, KVM provides an API set that QEMU uses to set and get the state of virtual CPUs and run them. For example, QEMU sets the initial values of the CPU's registers before starting the VM.
2. Second, after KVM starts a guest OS, certain operations (such as privileged instructions) performed by the OS cause an exception (or exit) into the host Linux kernel that must be handled and processed by KVM. This handling of traps is referred to as "emulation". These traps are transparent to the guest.

The KVM API is documented in the Linux kernel-- Documentation/virtual/kvm/api.txt.

KVM/QEMU supports virtual I/O which allows sharing of physical I/O devices by multiple VMs. Virtual network and block I/O are supported. See For More Information for references that provide additional information on virtio.

10.1.1.4 Device Tree Overview

A device tree is a data structure that describes hardware resources such as CPUs, memory, and I/O devices. An device tree aware OS is passed a device tree which it reads to determine what hardware resources are available.

The host Linux kernel is booted first by a bootloader, for example u-boot (an open source bootloader). U-boot passes the kernel a **hardware** device tree that lists and describes all system hardware resources available to the host kernel (CPUs/cores, memory, interrupt controller and I/O).

Similarly, when a guest OS is booted in a KVM/QEMU virtual machine, QEMU passes it a **guest** device tree that describes all the hardware resources in the VM. See Figure below.

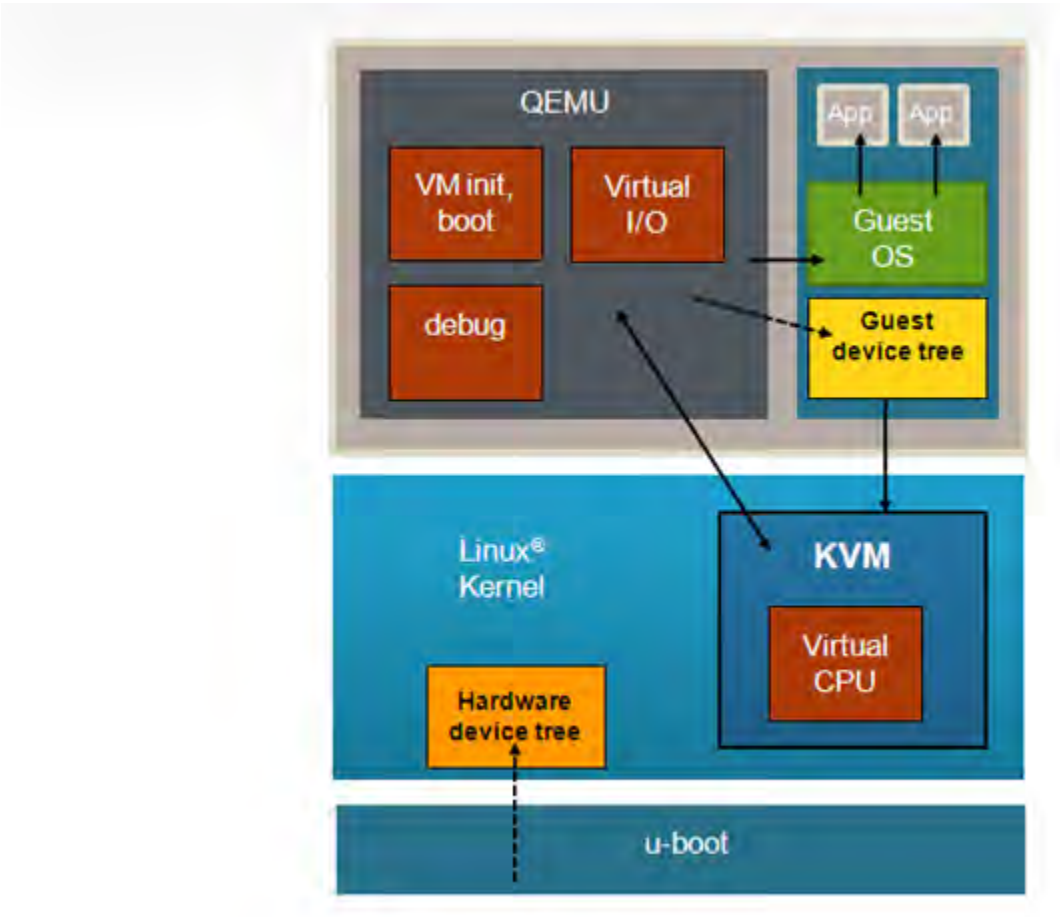

Figure 238.

The guest device tree is generated by QEMU and is used to define the resources a virtual machine will see. The guest device tree defines CPUs, memory, and I/O devices. QEMU places the guest device tree in the virtual machine's memory prior to starting the virtual machine.

10.1.1.5 References

[1] QEMU Emulator User Documentation: http://qemu.weilnetz.de/qemu-doc.html

[2] The Linux usage model for device tree data: https://www.kernel.org/doc/Documentation/devicetree/usage-model.txt

[3] Specification for virtio devices: http://docs.oasis-open.org/virtio/virtio/v1.0/csprd01/virtio-v1.0-csprd01.pdf

10.1.1.6 For More Information

KVM

- KVM website: http://www.linux-kvm.org
- Arm VM specification: http://lwn.net/Articles/589122/
- Supporting KVM on Arm architecture: http://lwn.net/Articles/557132/

QEMU

- QEMU website: http://www.qemu.org/

Device Trees

- devicetree.org website: http://devicetree.org
- DTC, the device tree compiler is available at: https://git.kernel.org/pub/scm/utils/dtc/dtc.git . DTC also includes a library called libfdt which can be used by software to parse device trees.

Virtio-- a framework for doing virtual I/O using KVM/QEMU

- http://www.ibm.com/developerworks/linux/library/l-virtio/
- http://ozlabs.org/~rusty/virtio-spec/virtio-paper.pdf
- http://docs.oasis-open.org/virtio/virtio/v1.0/csprd01/virtio-v1.0-csprd01.pdf

Virtual Networking with QEMU

- http://wiki.qemu.org/Documentation/Networking
- http://www.linux-kvm.org/page/Networking

10.1.1.7 Virtual machine reference

10.1.1.7.1 VM Overview

In general the architecture of KVM/QEMU is such that few changes should be needed to guest software to run in a VM-- i.e. a full virtualization approach is used, which means that virtual CPUs and virtual I/O devices behave like the physical hardware they are emulating.

However, there are some differences between virtual machines and native hardware that should be considered when targeting an OS to a KVM virtual machine. These differences can be divided into 2 general categories that will be discussed in further detail in this section:

1. Initial state and boot
2. CPUs

10.1.1.7.2 Memory Map of Virtual I/O Devices

The virt virtual machine contains a small subset of the devices found on a SoC. The available devices will be represented in the device tree passed to the guest at boot (e.g. virtual interrupt controller, virtual PCIE controller).

10.1.1.7.3 Virtual machine state at initialization

10.1.1.7.3.1 Initial State and Boot

When booting the Host, kernel is entered into the HYP mode for ARMv7 respectively EL2 privillege level for ARMv8. After the boot the kernel uses a stub to install KVM and switches back to SVC, respectively EL1. The virtual machine has no virtualization extensions available, so the guest kernel will be entered in SVC mode (ARMv7) respectively EL1 (ARMv8).

In case of a real hardware the boot program will provide some services before giving control to the OS. The necessary steps needed to be done by the bootloader are described in the kernel documentation: *Documentation/arm/Booting*l (ARMv7), *Documentation/arm64/booting.txt* (ARMv8). In case of virtualization, KVM/QEMU makes the necessary actions to put hardware into the initial state (as seen by the guest) and also will take the role of the bootloader and makes the necessary settings.

It is recommended that a guest OS be minimally device tree aware. The libfdt library (available with the DTC tool) provides a full range of APIs to parse and manipulate device trees and will make the process of adding device tree awareness to an OS straightforward.

10.1.1.7.3.2 Initial State of Virtual CPUs

In a VM with multiple virtual CPUs, CPU #0 is the boot CPU and all other vcpus in the partition are considered secondary. The boot method for the secondary CPUs is PSCI.

The virtual CPU entry conditions comply with the entry conditions specified by *linux/Documentation/arm/Booting* (ARMv7) or *Documentation/ arm64/booting.txt* (ARMv8)

10.1.1.7.4 Virtual CPUs

10.1.1.7.4.1 Virtual CPU Specification

Software running in a virtual machine sees a virtual CPU that emulates an ARMv7/ARMv8 core without virtualization extensions.

The virtual CPU type will match that of the host hardware platform.

10.1.1.7.4.2 Time in the Virtual CPU

Arm architecture has an optional extension, the generic timers, which provides:

- a counter (*physical counter*) that measures passing of time in real time
- a timer (*physical timer*) for each CPU. The timer is programmed to raise an interrupt to the CPU after a certain amount of time has passed.

The generic timers include virtualization support by introducing:

- a new counter, the *virtual counter*
- a new timer, the *virtual timer*.

This allows the virtual machine to have direct access to reading (virtual) counters and programming (virtual) timers without trapping.

KVM uses the physical timers in the host, the virtual machine access to the physical timers being disabled.

The virtual machine accesses the virtual timer and can, in this way, directly access the timer hardware without trapping to the hypervisor. However, the virtual timers do not raise virtual interrupts, but hardware interrupts which trap to the hypervisor. KVM injects a corresponding virtual interrupt into the VM when it detects that the virtual timer expired.

10.1.1.7.5 VGIC

The Arm Generic Interrupt Controller (GIC) provides hardware support for virtualization. The guest is able to mask, acknowledge and EOI interrupts without trapping to the hypervisor. However, there is a central part of the GIC called distributor which is

responsible for interrupt prioritization and distribution to each CPU which does not provide virtualization extensions and for this part KVM provides an in-kernel emulation. Also, all the physical interrupts cannot be directly received by the guest. Instead, the KVM will program a virtual interrupt which will be raised in the guest. But, with the virtualization support in the GIC controller, when the guest is ACK-ing and EOI-ing the virtual interrupt, there is no need to trap into KVM.

QEMU/KVM provides 2 flavours of an emulated GIC:

- a GICv2 emulation which is the default option. Example command line:`-machine type=virt`
- a GICv3 emulation selected by the `gic-version` property. Example command line: `-machine type=virt,gic-version=3`. The GICv3 emulated interrupt controller is available only for platforms that have a physical GICv3 interrupt controller.

10.1.2 Configuring and Building

10.1.2.1 Overview

Linux with KVM enabled and QEMU can be built as part of the standard build process used to build the NXP LSDK.

The build instructions in the sections that follow assume a succesfull build/installation of the host. Please refer to the LSDK documentation for the host installation steps.

By default, the QEMU package installed on the target board will be the one retrieved from the Ubuntu userland sources. In order to use features such as DPAA2 Direct Assignment or PCIE Direct Assignment, please refer to the Building QEMU chapter in order to compile and build the necessary QEMU 4.1.0 version.

10.1.2.2 Quick Start - Recommended Configuration Options

The steps below show all the recommended configuration options to enable in order to build a kernel with virtual I/O enabled with the same kernel image serving as both host and guest. The sections that follow explain these options in further detail.

NOTE

The configuration options to run virtual machines are enabled by default in the LSDK. However they are listed here for reference.

1. From the main menuconfig window enable virtualization:

```
[*] Virtualization
```

2. In the virtualization menu enable the following options:

```
[*] Kernel-based Virtual Machine (KVM) support
```

3. Enable network bridging

```
Networking support  --->
    Networking options  --->
        <*> 802.1d Ethernet Bridging
```

4. Enable virtio PCI

```
Device Drivers  --->
    Virtio drivers  --->
      <*> PCI driver for virtio devices
```

5. Enable virtio for block devices

```
Device Drivers  --->
    [*] Block devices  --->
        <*>   Virtio block driver
```

6. Enable virtio for network devices

```
Device Drivers --->
  [*] Network device support
    [*] Network core driver support
          <*>   Universal TUN/TAP device driver support
          <*>   Virtio network driver
```

7. Enable vhost for virtio network devices

```
[*] Virtualization
    <*>   Host kernel accelerator for virtio net
```

8. Enable Huge TLB file support

```
File Systems --->
    Pseudo filesystems --->
        [*] Huge TLB file system support
```

9. Enable guest serial support

```
Device Drivers --->
    Character devices --->
        Serial drivers --->
             <*> Arm AMBA PL011 serial port support
             [*]   Support for console on AMBA serial port
```

10. Enable VFIO support

```
Device Drivers --->
    <*> VFIO Non-Privileged userspace driver framework
```

11. Enable VFIO support for QorIQ DPAA2 fsl-mc (Management Complex) devices

```
Device Drivers --->
    <*> VFIO Non-Privileged userspace driver framework (VFIO [=y]) --->
        [*]   VFIO No-IOMMU support  ----
        <*>   VFIO support for QorIQ DPAA2 fsl-mc bus devices
```

12. Enable support for PCI VFIO

```
Device Drivers --->
    <*> VFIO Non-Privileged userspace driver framework (VFIO [=y]) --->
        [*]   VFIO No-IOMMU support  ----
        <*>   VFIO support for PCI devices
```

10.1.2.3 Host Kernel: Enabling KVM

This section describes the core, basic options needed to enable KVM in the host kernel. KVM is enabled in the host kernel under the virtualization menu of the main kernel menuconfig window.

```
[*] Virtualization
```

Core KVM support is enabled as follows:

```
[*] Kernel-based Virtual Machine (KVM) support
```

10.1.2.4 Host Kernel: Enabling Virtual Networking

Virtual network interfaces describes how virtual networking can be used to give each VMs a virtual network interface which share physical network interfaces in Linux.

One common approach to configuring virtual networking is for QEMU to use a tun/tap interface bridged to a physical network interface. To do this Ethernet bridging and the kernel's tun/tap features must be enabled in the host kernel:

```
Networking support  --->
          Networking options  --->
                    <*> 802.1d Ethernet Bridging
Device Drivers --->
          [*] Network device support
            [*] Network core driver support
                    <*>   Universal TUN/TAP device driver support
```

In order to enable vhost-net, the following config option should ne enabled:

```
[*] Virtualization
    <*>   Host kernel accelerator for virtio net
```

10.1.2.5 Host kernel: Enabling DPAA2 direct assignment

Direct assigned devices chapter describes the mechanism used to passthrough fsl-mc bus devices to guest VMs using the VFIO framework. This section lists the Kconfig options that should be enabled in the Linux host kernel in order to support *DPAA2 Direct Assignment*.

Enable VFIO framework support

```
Device Drivers --->
    <*> VFIO Non-Privileged userspace driver framework
```

Enable VFIO support for QorIQ DPAA2 fsl-mc (Management Complex) devices

```
Device Drivers --->
    <*> VFIO Non-Privileged userspace driver framework (VFIO [=y]) --->
        [*]   VFIO No-IOMMU support  ----
        <*>   VFIO support for QorIQ DPAA2 fsl-mc bus devices
```

NOTE

"VFIO No-IOMMU support" option is needed (only) for VFIO support in guest (e.g. DPDK in guest userspace)

10.1.2.6 Host kernel: Enabling PCIE direct assignment

Direct assigned devices chapter describes the mechanism used to passthough PCI devices using the VFIO framework.

This section lists the required Kconfig options in the host Linux kernel in order to use the aforementioned feature.

Enable VFIO framework support

```
Device Drivers --->
    <*> VFIO Non-Privileged userspace driver framework
```

Enable support for PCI VFIO

```
Device Drivers --->
    <*> VFIO Non-Privileged userspace driver framework (VFIO [=y]) --->
        <*>   VFIO support for PCI devices
```

10.1.2.7 Guest kernel: Enabling console

QEMU emulates an AMBA/PL011 console.

Below the kernel configuration options are shown to enable console:

```
Device Drivers --->
    Character devices --->
        Serial drivers --->
             <*> Arm AMBA PL011 serial port support
             [*]   Support for console on AMBA serial port
```

10.1.2.8 Guest Kernel: Enabling Network and Block Virtual I/O

Virtio is a framework for doing paravirtualized I/O using QEMU/KVM. In order to support communication between guest and hypervisor virtio uses a PCI transport protocol.

Below the kernel configuration options are shown to enable virtio-pci:

```
Device Drivers  --->
    Virtio drivers  --->
      <*> PCI driver for virtio devices
```

Below the kernel configuration options are shown to enable virtio drivers in the Linux kernel to support networking I/O and block (disk) I/O.

```
Device Drivers --->
          [*] Network device support
                  [*] Network core driver support
                        <*>   Virtio network driver
Device Drivers  --->
          [*] Block devices  --->
                    <*>   Virtio block driver
```

10.1.2.9 Building kernel with KVM support using flexbuild

NOTE

The steps presented here assume an understanding of using the `flex-builder` script to build LSDK. For details refer to LSDK building instructions.

The kernel can be built using the `flex-builder` utility (For more information please refer to the LSDK building instructions):

```
flex-builder -c linux -a arm64   // build linux kernel for arm64 platforms
flex-builder -c linux -a arm32   // build linux kernel for arm32 v8 platforms
flex-builder -c linux -a arm32 -m ls1021atwr  // build for LS1021a arm32 v7 platform
```

If the kernel configuration needs to be changed, the custom option should be invoked and the necessary changes performed:

```
flex-builder -c linux:custom -a arm64  // generate custom kernel .config for arm64 in interactive memu
flex-builder -c linux -a arm64            // build kernel based on the customized .config above
```

The same kernel image will be used by both guest and host.

10.1.2.10 Building QEMU

`flex-builder` script is used to generate the host root file system (For more details please see the LSDK building instructions). The generated host root filesystem already contains the QEMU installed. In the case the user wants to use a different QEMU version, this new version should be manually compiled and installed on the target (*Note:* The provided steps are targetting 64 bit platforms).

In order to use the DPAA2 Direct Assignment feature, a user should use the following commands in order to compile and install the proper QEMU version on the target.

1. Clone QEMU:

```
$ git clone https://source.codeaurora.org/external/qoriq/qoriq-components/qemu
```

2. Get the right branch:

```
$ git checkout qemu-4.1
```

3. Install the fdt library. The fdt library is a dependency, QEMU uses a newer library than the one from the Ubuntu userland, so compile it locally.

```
$ git submodule update --init dtc
```

4. Install the dependencies. These are the minimum dependencies required:

```
$ apt-get install pkg-config
$ apt-get install libglib2.0-dev
$ apt-get install libpixman-1-dev
$ apt-get install libaio-dev
$ apt-get install libusb-1.0-0-dev
```

   If the last two dependencies are not present, the config step will not complain but will not build the required support.

5. Configure and compile QEMU

```
$ ./configure --prefix=<folder_where_the_qemu_will_be_installed> --target-list=aarch64-softmmu --
enable-fdt --enable-kvm
$ make
```

6. Install QEMU

```
$ make install
```

7. Include the folder containing the qemu executable in the system path.

```
$ export PATH=<folder_where_the_qemu_will_be_installed>/bin:$PATH
```

8. Make sure that the minimum required libraries are linked:

```
$ ldd qemu-system-aarch64
    linux-vdso.so.1 =>  (0x0000ffffbad94000)
    libz.so.1 => /lib/aarch64-linux-gnu/libz.so.1 (0x0000ffffbad35000)
    libaio.so.1 => /lib/aarch64-linux-gnu/libaio.so.1 (0x0000ffffbad23000)
    libpixman-1.so.0 => /usr/lib/aarch64-linux-gnu/libpixman-1.so.0 (0x0000ffffbacbe000)
    libutil.so.1 => /lib/aarch64-linux-gnu/libutil.so.1 (0x0000ffffbacab000)
    libnuma.so.1 => /usr/lib/aarch64-linux-gnu/libnuma.so.1 (0x0000ffffbac8d000)
    libusb-1.0.so.0 => /lib/aarch64-linux-gnu/libusb-1.0.so.0 (0x0000ffffbac67000)
    libglib-2.0.so.0 => /lib/aarch64-linux-gnu/libglib-2.0.so.0 (0x0000ffffbab60000)
    libstdc++.so.6 => /usr/lib/aarch64-linux-gnu/libstdc++.so.6 (0x0000ffffba9d1000)
```

```
    libm.so.6 => /lib/aarch64-linux-gnu/libm.so.6 (0x0000ffffba924000)
    libgcc_s.so.1 => /lib/aarch64-linux-gnu/libgcc_s.so.1 (0x0000ffffba903000)
    libpthread.so.0 => /lib/aarch64-linux-gnu/libpthread.so.0 (0x0000ffffba8d7000)
    libc.so.6 => /lib/aarch64-linux-gnu/libc.so.6 (0x0000ffffba790000)
    /lib/ld-linux-aarch64.so.1 (0x0000ffffbad69000)
    libudev.so.1 => /lib/aarch64-linux-gnu/libudev.so.1 (0x0000ffffba75f000)
    libpcre.so.3 => /lib/aarch64-linux-gnu/libpcre.so.3 (0x0000ffffba6ee000)
```

9. Make sure that the qemu version is the expected one.

```
$ qemu-system-aarch64 --version
QEMU emulator version 4.1.0 ...
```

10.1.2.11 Creating a host Linux root filesystem

Creating a Linux root filesystem is out of the scope of this document. Please reference the NXP LSDK documentation on how to create root filesystems with `flex-builder` installer script. This section describes the software components needed on the host root filesystem to use KVM/QEMU.

The host root filesystem is the filesystem booted by the host kernel. The host rootfs is distinct from a guest root filesystem which may be needed by certain guest such as Linux.

A host root filesystem capable of running Linux as a guest needs the following components:

- Guest Linux kernel image (e.g. Image, zImage)
- QEMU executable (qemu-system-aarch64 or qemu-system-arm)
- Guest root fileystem

Example host root filesystem layout with the required components to boot a Linux guest:

```
/root/zImage                                # guest Linux kernel
/root/ubuntu_bionic_arm64_rootfs.ext4.img   # guest virtual disk image
/usr/bin/qemu-system-arm                    # QEMU for ARMv7 platforms
/usr/bin/qemu-system-aarch64                # QEMU for ARMv8 platforms
```

10.1.2.12 Creating a guest Linux root filesystem

In order to run a virtual machine, a guest Linux root filesystem is needed. There are various possibilities to host a guest root filesystem: a ramdisk, a virtual disk image, a block device on the host Linux system.

Also there are multiple virtual disk formats. `qemu-img` command can be used to generate, alter and convert between various virtual disk image formats.

A raw virtual disk can be created with the `flex-builder` script (the command is actually a wrapper over `qemu-img`):

```
flex-builder -i rfsraw2ext -a <arch> -B 2G
```

The command will generate a 2 GB raw disk image:

```
build/images/ubuntu_bionic_arm64_rootfs.ext4.img
```

10.1.3 KVM/QEMU How-to's

10.1.3.1 Quick-start Steps to Build and Deploy KVM

The following steps show how to build and deploy the necessay components in order to run virtual machines:

1. Build and install the LSDK on the board. (for details see Layerscape SDK user guide)

2. Build the guest virtual disk (for details see Creating a guest Linux root filesystem)
3. Transfer the guest virtual image and the guest image on the host. The guest image (Image or zImage) is already in the /boot partition on the host system.

10.1.3.2 Quick-start Steps to Run KVM Using Hugetlbfs

This example assumes that the host Linux kernel is booted, has a working network interface, and the following images are present in the host root filesystem:

- Guest kernel image (*/boot/zImage* or */boot/Image*)
- Guest virtual disk image (*/root/ubuntu_bionic_arm64_rootfs.ext4.img*)
- QEMU (*/usr/bin/qemu-system-arm* or */usr/bin/qemu-system-aarch64*)

Mount the HugeTLB filesystem on the host:

```
echo 512 >  /proc/sys/vm/nr_hugepages
mkdir /mnt/hugetlbfs     #any mount point can be used
mount -t hugetlbfs none /mnt/hugetlbfs/
```

This example will use 512 2M pages (2M is the defaul huge page size)

Start QEMU specifying the 2MB huge page pool as the file from which to allocate memory. In this example 512MB of memory is allocated to the VM:

64 bit ARMv8:

```
qemu-system-aarch64 -smp 8 -m 1024 -mem-path /mnt/hugetlbfs -cpu host -machine type=virt,gic-
version=3 -kernel /boot/Image -enable-kvm -display none -serial tcp::4446,server,telnet
-drive if=none,file=ubuntu_bionic_arm64_rootfs.ext4.img,id=foo,format=raw -device virtio-blk-
device,drive=foo -append 'root=/dev/vda rw console=ttyAMA0 rootwait earlyprintk' -monitor stdio
```

NOTE

On the GICv3 capable platforms the following emulated GIC controllers can be used:

- an emulated GICv3 interrupt controller can be used: `-machine type=virt,gic-version=3`
- an emulated GICv2 interrupt controller can be used: `-machine type=virt`

The ITS emulation is supported only with a GICv3 emulated interrupt controller.

On the GICv2 capable platforms only an emulated GICv2 interrupt comtroller can be used: `-machine type=virt`

32bit ARMv7:

```
qemu-system-arm -smp 2 -m 512 -mem-path /mnt/hugetlbfs -cpu host -machine
type=virt -kernel /boot/zImage -enable-kvm -display none -serial tcp::4446,server,telnet
-drive if=none,file=ubuntu_bionic_arm32_rootfs.ext4.img,id=foo,format=raw -device virtio-blk-
device,drive=foo -append 'root=/dev/vda rw console=ttyAMA0 rootwait earlyprintk' -monitor stdio
```

NOTE

Make sure that the /mnt/hugetlbfs folder exists and is mounted when starting QEMU.

Explanation of the command line options:

- `-smp 2`: specifies the number of virtual CPUs.
- `-m 512`: the amount of memory for the VM
- `-mem-path /mnt/hugetlbfs`: allocates from hugetlbfs based memory

- `-cpu host`: the type of the CPU. In this case it is the same as the host CPU
- `-machine type=virt,gic-version=3`: the type of the virtual machine: virt machine + an GICv3 emulated interrupt controller
- `-machine type=virt`: the type of the virtual machine: virt machine + an GICv2 emulated interrupt controller
- `-kernel /boot/Image` : name of guest Linux kernel
- `-enable-kvm`: specifies that KVM should be used
- `-serial tcp::4446,server,telnet` : provide an emulated serial port (telnet server) on port 4446 on the host Linux system. Default behavior will be for QEMU to wait until the user connects to this port before booting the VM.
- `-drive if=none,file=ubuntu_bionic_arm64_rootfs.ext4.img,id=foo,format=raw -device virtio-blk-device,drive=foo`: creates a virtio based virtual disk (for details see Virtual block devices)
- `-append 'root=/dev/vda rw console=ttyAMA0 rootwait earlyprintk'`: guest Linux boot args
- `-display none`: do not display video output
- `-monitor stdio`: start QEMU monitor

At this point QEMU is waiting for a telnet connection to the virtual machine's console (port 4446 of the target board) prior to starting the virtual machine.

Connect to QEMU via telnet to start the virtual machine booting. In this example the target board has IP address 192.168.4.100.

```
-bash-3.2$ telnet 192.168.4.100 4446
Trying 192.168.4.100...
Connected to 192.168.4.100 (192.168.4.100).
Escape character is '^]'.
[    0.000000] Booting Linux on physical CPU 0x0
[    0.000000] Initializing cgroup subsys cpuset
[    0.000000] Initializing cgroup subsys cpu
[    0.000000] Initializing cgroup subsys cpuacct
.........................
[  OK  ] Reached target Multi-User System.
[  OK  ] Reached target Graphical Interface.
         Starting Update UTMP about System Runlevel Changes...
[  OK  ] Started Update UTMP about System Runlevel Changes.

Ubuntu 16.04.2 LTS localhost ttyAMA0

localhost login: root
Password:
Last login: Mon Jun  5 22:07:09 UTC 2017 on ttyAMA0
Welcome to Ubuntu 16.04.2 LTS (GNU/Linux 4.4.65-00001-g6fed54f aarch64)

 * Documentation:  https://help.ubuntu.com
 * Management:     https://landscape.canonical.com
 * Support:        https://ubuntu.com/advantage
root@localhost:~#
```

10.1.3.3 How to Use Virtual Network Interfaces Using Virtio

As discussed in Virtual network interfaces, there are two aspects of virtual network interfaces-- 1) the "front end" (the device as seen by the guest OS) and 2) the "backend" (the means by the virtual device is connected to the network).

This example uses a "virtio" model NIC card and a tap network backend. The virtual network interface is bridged via a TAP interface to the physical network. The guest OS is Linux.

When starting QEMU we will add the following arguments to create the virtual network interface:

```
-netdev tap,id=tap0,script=/home/root/qemu-ifup,downscript=no,ifname="tap0" -device virtio-net-
pci,netdev=tap0
```

Perform the following steps:

1. Enable virtio networking in the host and guest Linux kernels.
2. On the host Linux create a bridge to the physical network interface to be used by the virtual network interface in the virtual machine using the **brctl** command. In this example the physical interface being used is eth2:

```
brctl addbr br0
ifconfig br0 192.168.3.30 netmask 255.255.248.0
ifconfig eth2 0.0.0.0
brctl addif br0 eth2
```

3. Create a qemu-ifup script on the host Linux system. For the TAP backend type, when QEMU creates the virtual network interface it invokes a user-created script that allows customization of how the TAP interface is to be handled. The name of the TAP interface created by QEMU is passed as an argument. In this example we will bridge the the TAP inteface to the bridge created in step #2. See the example qemu-ifup script below:

```
#!/bin/sh
# TAP interface will be passed in $1
bridge=br0
guest_device=$1
ifconfig $guest_device 0.0.0.0 up
brctl addif $bridge $guest_device
```

4. When starting QEMU specify that the network device type is "virtio" and specify the path to the script created in step #3:

```
qemu-system-aarch64 -smp 8 -m 1024 -cpu host -machine type=virt,gic-version=3
-kernel /boot/Image -enable-kvm -display none -serial tcp::4446,server,telnet -
drive if=none,file=ubuntu_bionic_arm64_rootfs.ext4.img,id=foo,format=raw -device virtio-blk-
device,drive=foo  -netdev tap,id=tap0,script=qemu-ifup,downscript=no,ifname="tap0" -device
virtio-net-pci,netdev=tap0 -append 'root=/dev/vda rw console=ttyAMA0 rootwait earlyprintk' -
monitor stdio
```

5. In the guest OS the virtual network interface will appear and can be brought up and assigned an IP address in the normal way. In the example below (the commands are run from the guest command shell) the virtio interface is eth0.

```


root@localhost:~# ip addr
1: lo: <LOOPBACK,UP,LOWER_UP> mtu 65536 qdisc noqueue state UNKNOWN group default qlen 1
    link/loopback 00:00:00:00:00:00 brd 00:00:00:00:00:00
    inet 127.0.0.1/8 scope host lo
       valid_lft forever preferred_lft forever
    inet6 ::1/128 scope host
       valid_lft forever preferred_lft forever
2: enp0s1: <BROADCAST,MULTICAST> mtu 1500 qdisc noop state DOWN group default qlen 1000
    link/ether 52:54:00:12:34:56 brd ff:ff:ff:ff:ff:ff
3: sit0@NONE: <NOARP> mtu 1480 qdisc noop state DOWN group default qlen 1
    link/sit 0.0.0.0 brd 0.0.0.0
6: docker0: <BROADCAST,MULTICAST> mtu 1500 qdisc noop state DOWN group default
    link/ether 02:42:a5:57:0b:85 brd ff:ff:ff:ff:ff:ff
    inet 172.17.0.1/16 scope global docker0
       valid_lft forever preferred_lft forever

root@localhost:~# ethtool -i enp0s1
```

```
driver: virtio_net
version: 1.0.0
firmware-version:
expansion-rom-version:
bus-info: 0000:00:01.0
supports-statistics: no
supports-test: no
supports-eeprom-access: no
supports-register-dump: no
supports-priv-flags: no

$ ifconfig enp0s1 192.168.3.31 netmask 255.255.248.0
```

10.1.3.4 How to use vhost-net with virtio

vhost-net is a character device that can be used to reduce the number of system calls involved in virtio networking. vhost-net moves network packets between the guest and the host system using the Linux kernel, bypassing QEMU.

In order to use vhost-net perform the following steps:

1. Enable virtio networking and vhost-net in the host and guest Linux kernels.
2. On the host Linux create a bridge to the physical network interface to be used by the virtual network interface in the virtual machine using the **brctl** command. In this example the physical interface being used is eth2:

```
brctl addbr br0
ifconfig br0 192.168.3.30 netmask 255.255.248.0
ifconfig eth2 0.0.0.0
brctl addif br0 eth2
```

3. Create a qemu-ifup script on the host Linux system. For the TAP backend type, when QEMU creates the virtual network interface it invokes a user-created script that allows customization of how the TAP interface is to be handled. The name of the TAP interface created by QEMU is passed as an argument. In this example we will bridge the the TAP inteface to the bridge created in step #2. See the example qemu-ifup script below:

```
#!/bin/sh
# TAP interface will be passed in $1
bridge=br0
guest_device=$1
ifconfig $guest_device 0.0.0.0 up
brctl addif $bridge $guest_device
```

4. When starting QEMU specify that the network device type is "virtio" and that vhost-net (**vhost=on** parameter) is used:

```
qemu-system-aarch64 -smp 8 -m 1024 -cpu host -machine type=virt,gic-version=3
-kernel /boot/Image -enable-kvm -display none -serial tcp::4446,server,telnet -
drive if=none,file=ubuntu_bionic_arm64_rootfs.ext4.img,id=foo,format=raw -device virtio-blk-
device,drive=foo  -netdev tap,id=tap0,script=qemu-ifup,downscript=no,ifname="tap0",vhost=on -
device virtio-net-pci,netdev=tap0 -append 'root=/dev/vda rw console=ttyAMA0 rootwait
earlyprintk' -monitor stdio
```

5. In the guest the virtual interface will come up as described in How to Use Virtual Network Interfaces Using Virtio. In the Host kernel the vhost thread can be seen consuming CPU:

```
 2928 root      20   0 3258364 458340  19956 S 109.3  3.1   1:59.36 qemu-system-
aar
 2944 root      20   0       0      0      0 R  99.7  0.0   1:43.52
```

```
vhost-2928
 3020 root      20   0  225660   1224   1068 S  88.7  0.0   0:05.75 iperf
```

10.1.3.5 How to Use Virtual Disks Using Virtio

As discussed in Virtual block devices, there are a number of formats available for virtual disk images.

The example below uses a raw file. The steps below go through the process of creating a virtual disk image, assigning it to a VM, partitioning the disk, creating a filesystem on it, and mounting it.

1. On the host Linux, create a binary image to represent the guest disk. For example to create a 16MB disk:

```
$ dd if=/dev/zero of=my_guest_disk bs=4K count=4K
```

2. Start QEMU, specifying the name of the virtual disk file for the -drive argument:

```
qemu-system-aarch64 -smp 8 -m 1024 -cpu host -machine type=virt,gic-version=3
-kernel /boot/Image -enable-kvm -display none -serial tcp::4446,server,telnet -
drive if=none,file=ubuntu_bionic_arm64_rootfs.ext4.img,id=foo,format=raw -device virtio-blk-
device,drive=foo -drive if=none,file=my_guest_disk,cache=none,id=user,format=raw -device virtio-
blk-pci,drive=user -append 'root=/dev/vda rw console=ttyAMA0 rootwait earlyprintk' -monitor stdio
```

3. After the guest has booted the virtual disk is visible as a block device in /dev with the name vda, vdb, etc. In this example we have actually two virtual disks: one for the guest rootfs (`vda`) and one for `my_guest_disk`.

```
$ ls -l /dev/vdb
brw-rw---- 1 root disk 254, 0 Jan  1  1970 /dev/vdb
```

   A virtual block device can be treated like any other hard disk. It can be partitioned, formatted, and mounted.

4. Configure a partition on the disk with fdisk:

```
root@localhost:~# fdisk /dev/vdb

Welcome to fdisk (util-linux 2.27.1).
Changes will remain in memory only, until you decide to write them.
Be careful before using the write command.

Device does not contain a recognized partition table.
Created a new DOS disklabel with disk identifier 0xc9820d64.

Command (m for help):
```

   Display the partition table:

```

Command (m for help): p
Disk /dev/vdb: 16 MiB, 16777216 bytes, 32768 sectors
Units: sectors of 1 * 512 = 512 bytes
Sector size (logical/physical): 512 bytes / 512 bytes
I/O size (minimum/optimal): 512 bytes / 512 bytes
Disklabel type: dos
Disk identifier: 0xc9820d64

Command (m for help):
```

Create a new partition:

```
Command (m for help): n
Partition type
   p   primary (0 primary, 0 extended, 4 free)
   e   extended (container for logical partitions)
Select (default p): p
Partition number (1-4, default 1):
First sector (2048-32767, default 2048):
Last sector, +sectors or +size{K,M,G,T,P} (2048-32767, default 32767):

Created a new partition 1 of type 'Linux' and of size 15 MiB.

Command (m for help):
```

Display the new partition:

```
Command (m for help): p
Disk /dev/vdb: 16 MiB, 16777216 bytes, 32768 sectors
Units: sectors of 1 * 512 = 512 bytes
Sector size (logical/physical): 512 bytes / 512 bytes
I/O size (minimum/optimal): 512 bytes / 512 bytes
Disklabel type: dos
Disk identifier: 0xc9820d64

Device     Boot Start   End Sectors Size Id Type
/dev/vdb1        2048 32767   30720  15M 83 Linux
```

Write the partition table to disk and exit:

```
Command (m for help): w
The partition table has been altered.
Calling ioctl() to re-read partition table.
Syncing disks.
```

5. Create a filesystem on the new partition:

```
root@localhost:~# mkfs.ext4 /dev/vdb1
mke2fs 1.42.13 (17-May-2015)
Creating filesystem with 15360 1k blocks and 3840 inodes
Filesystem UUID: 8f0c49e4-2737-498e-a984-c5f05ba59b99
Superblock backups stored on blocks:
    8193

Allocating group tables: done
Writing inode tables: done
Creating journal (1024 blocks): done
Writing superblocks and filesystem accounting information: done
```

6. Mount the filesystem:

```
root@localhost:~# mount /dev/vdb1 /boot/
root@localhost:~# echo "A virtual disk" > /boot/test.txt
root@localhost:~# cat /boot/test.txt
A virtual disk
```

10.1.3.6 How to use virtual disks using virtio-blk-dataplane

Virtio-blk-dataplane was developed for high performance disk I/O, especially for high IOPS devices. The QEMU performs the disk I/O in a dedicated thread that is optimized for I/O performance.

In this example an sdcard is used, a block device on the Linux host.

1. Start QEMU:

```
qemu-system-aarch64 -smp 8 -m 1024 -cpu host -machine type=virt,gic-version=3
-kernel /boot/Image -enable-kvm -display none -serial tcp::4446,server,telnet
-drive if=none,file=ubuntu_bionic_arm64_rootfs.ext4.img,id=foo,format=raw -device
virtio-blk-device,drive=foo -object iothread,id=iothread0 -drive
if=none,file=/dev/mmcblk0,cache=none,id=drive0,format=raw,aio=native -device virtio-blk-
pci,drive=drive0,scsi=off,iothread=iothread0 -append 'root=/dev/vda rw console=ttyAMA0 rootwait
earlyprintk' -monitor stdio
```

2. After the guest boots, the virtual disk is visible as a block device with the name vda, vdb, etc.

```
root@localhost:~# fdisk /dev/vdb

Welcome to fdisk (util-linux 2.27.1).
Changes will remain in memory only, until you decide to write them.
Be careful before using the write command.


Command (m for help): p
Disk /dev/vdb: 16 MiB, 16777216 bytes, 32768 sectors
Units: sectors of 1 * 512 = 512 bytes
Sector size (logical/physical): 512 bytes / 512 bytes
I/O size (minimum/optimal): 512 bytes / 512 bytes
Disklabel type: dos
Disk identifier: 0xc9820d64

Device     Boot Start   End Sectors Size Id Type
/dev/vdb1        2048 32767   30720  15M 83 Linux
```

In this case the disk has 1 partition. The partition can be mounted and used.

10.1.3.7 How to use DPAA2 direct assignment without scripts

As presented in the introductory chapter Direct assigned devices , the DPAA2 architecture has the concept of MC containers which are arranged in a *tree structure*. While the root container always belongs to the host Linux, the child containers can be *directly assigned* to a user-space application such as DPDK or, as in our case, to a QEMU guest VM.

In the pursuit of creating a guest VM with one DPAA2 network interface directly assigned, we first need to create the child container and all the necessary MC objects.

In order to determine the number of DPAA2 objects needed to create a network interfaceDPAA2 objects dependencies. For our example the following rule applies:

- the DPIO number should be equal to the number of cores for the guest VM to be deployed (for better performance)
- the DPCON number is equal to the number of cores multiplied by the number of interfaces
- one DPBP object for each network interface
- one DPMCP object for each network interface and for each DPIO object

The following section describes the steps to be followed in order to create a *single core VM with one DPAA2 network interface assigned*. The objects are created using the restool userspace program. For more details about the restool usage see DPRCs and restoolchapter.

1. Create and populate the child container
   - Create the necessary MC objects
     — create the child container (this container will be assigned to the guest)

```
$ restool dprc create dprc.1
dprc.2 is created under dprc.1
```

     — create the necessary objects in the child container

```
$ restool dpio create --container=dprc.2
dpio.11 is created under dprc.2
$ restool dpcon create --num-priorities=2 --container=dprc.2
dpcon.3 is created under dprc.2
$ restool dpmcp create --container=dprc.2
dpmcp.25 is created under dprc.2
$ restool dpmcp create --container=dprc.2
dpmcp.26 is created under dprc.2
$ restool dpbp create --container=dprc.2
dpbp.4 is created under dprc.2
$ restool dpni create --container=dprc.2
dpni.3 is created under dprc.2
```

   - Change the plugged state of the newly created objects to *plugged.*

```
$ restool dprc assign dprc.2 --object=dpio.11 --plugged=1
$ restool dprc assign dprc.2 --object=dpcon.3 --plugged=1
$ restool dprc assign dprc.2 --object=dpmcp.25 --plugged=1
$ restool dprc assign dprc.2 --object=dpmcp.26 --plugged=1
$ restool dprc assign dprc.2 --object=dpbp.4 --plugged=1
$ restool dprc assign dprc.2 --object=dpni.3 --plugged=1
```

   - Check if objects were created properly by listing the contents of the child container:

```
$ restool dprc show dprc.2
dprc.2 contains 6 objects:
object          label           plugged-state
dpni.3                          plugged
dpbp.4                          plugged
dpmcp.25                        plugged
dpmcp.26                        plugged
dpio.11                         plugged
dpcon.3                         plugged
```

   - Connect the dpni object to the required dpmac in your scenario:

```
$ restool dprc connect dprc.1 --endpoint1=dpni.3 --endpoint2=dpmac.3
```

2. Bind the newly created DPRC device to the vfio-fsl-mc driver

```
$ echo vfio-fsl-mc > /sys/bus/fsl-mc/devices/dprc.2/driver_override
$ echo dprc.2 > /sys/bus/fsl-mc/drivers/vfio-fsl-mc/bind
```

3. Add the device command below (for the DPRC to be assigned) to the QEMU command line:

```
 -device vfio-fsl-mc,host=dprc.2
```

Also, make sure to specify the appropiate number of cores for the guest VM. It should match the number of dpio objects created in the child container. In our case, 1 core.

```
-smp 1
```

4. Make sure to assign each vcpu thread to one physical CPU only
   - Start QEMU with -S option (the vcpu threads are not yet started). We need this in order for the Ethernet drivers in the guest to correctly bind the objects to the cores.

     ```
     qemu-system-aarch64 -smp 1 -m 1024 -cpu host -machine type=virt,gic-version=3
     -kernel /boot/Image -enable-kvm -display none -serial tcp::4446,server,telnet -
     drive if=none,file=ubuntu_bionic_arm64_rootfs.ext4.img,id=foo,format=raw -device virtio-blk-
     device,drive=foo   -append 'root=/dev/vda rw console=ttyAMA0 rootwait earlyprintk' -monitor
     stdio -device vfio-fsl-mc,host=dprc.2 -S
     ```

     Get the VM thread IDs entering QEMU shell

     ```
     (qemu) info cpus
     * CPU #0: thread_id=4952
     ```

   - Assign one vcpu thread to one core only.

     ```
     $ taskset -p 0x1 4952
     pid 4952's current affinity mask: ff
     pid 4952's new affinity mask: 1
     ```

   - Start the vcpu threads.

     ```
     (qemu) c
     ```

NOTE

In case you do not want to modify the child container configuration after starting QEMU, please use the restool dprc set-locked command: restool dprc set-locked dprc.2 --locked=1. The child container will be locked by its parent and will not be able to mount a denial of service attack by creating multiple objects.

10.1.3.8 How to use DPAA2 direct assignment with scripts

While in the previous chapter, How to use DPAA2 direct assignment without scripts , we saw how to use the DPAA2 Direct Assignment feature manually, by creating each individual DPAA2 object needed in the child DPRC, in this chapter we will present a second method to create the desired configuration for a child container that will be *assigned* to the guest VM.

In order to describe the DPAA2 object configuration for a guest VM, thus a child DPRC, we employ the *DPL - Data Path Layout* syntax. The *restool* package has a new helper script, *ls-append-dpl*, that can parse DPL files which describe a child DPRC configuration and create that scenario using the *restool* tool.

One can check if the aforementioned script is available:

```
$ which ls-append-dpl

$ ls-append-dpl --help
Usage: /usr/local/bin/ls-append-dpl [options] <dpl-file>

Options:
  -h, --help
          Print this help and exit
          root@localhost:~#
```

The next section will describe how to use the *ls-append-dpl* script in order to create the child container that will be assigned to the guest VM. The next section will cover only the DPRC creation process, step #1 from the previous chapter, while the remaining steps are still the same.

Single core guest with one network interface

Applying the rule presented before, we already know that in order to assign a network interface to a *single core guest* the child container should contain: 1 DPNI, 1 DPBP, 2 DPMCP, 1 DPIO and 1 DPCON.

- Create the DPL file

  The file *vm_1_core.dts* is a text file that uses the DPL syntax and describes the required configuration for a child container that will be used for a *single core, one network interface* guest.

  It has the exact same syntax as a DPL file used to describe the static host configuration. In the *vm_1_core.dts* file we can see that a *dprc* object is described:

```
        dprc@2 {
                compatible = "fsl,dprc";
                parent = "dprc.1";
```

  The *parent* property is mandatory and it should describe the parent container for the new one.

  In this simple configuration, the single *dpni* created is connected to the *dpmac@1* in the *connections* section as follows:

```
        connection@1{
                endpoint1 = "dpni@1";
                endpoint2 = "dpmac@1";
        };
```

  If you want to connect the *dpni@1* with any other object just change the value of *endpoint2*. For example, for a connection to be established with dpmac@2 change the fragment to:

```
        endpoint2 = "dpmac@2";
```

- Deploy the DPL configuration

```
$ ls-append-dpl vm_1_core.dts
Created the following objects:
        dpmcp.50
        dpmcp.51
        dpni.1
        dpio.8
        dpcon.1
        dprc.2
        dpbp.1
```

Multi core guest with one network interface

In order to tranzition from *1 core* guest to a *multi core* one, only the number of *dpio* and *dpcon* objects described in the DPL file need to be changed. Thus, in the case of a guest VM with 8 cores and one DPAA2 network interface, the DPL files should list and describe: *8 dpio, 8 dpcon, 9 dpmcp, 1 dpbp, 1 dpni.*

The vm_8_core.dts describes the configuration required for a 8 core guest VM with one DPAA2 interface. You can use it in a similar fashion:

```
$ ls-append-dpl vm_8_core.dts
```

ANNEX 1 - vm_1_core.dts

```
/dts-v1/;
/ {
    dpl-version = <10>;
    /*****************************************************************
     * Containers
     *****************************************************************/
    containers {

        dprc@2 {
            compatible = "fsl,dprc";
            parent = "dprc.1";
            options = "DPRC_CFG_OPT_SPAWN_ALLOWED", "DPRC_CFG_OPT_ALLOC_ALLOWED",
"DPRC_CFG_OPT_OBJ_CREATE_ALLOWED", "DPRC_CFG_OPT_IRQ_CFG_ALLOWED";

            objects {

                /* -------------- DPBPs --------------*/
                obj_set@dpbp {
                    type = "dpbp";
                    ids = <1>;
                };

                /* -------------- DPCONs --------------*/
                obj_set@dpcon {
                    type = "dpcon";
                    ids = <1>;
                };

                /* -------------- DPIOs --------------*/
                obj_set@dpio {
                    type = "dpio";
                    ids = <1>;
                };

                /* -------------- DPMCPs --------------*/
                obj_set@dpmcp {
                    type = "dpmcp";
                    ids = <1 2>;
                };

                /* -------------- DPNIs --------------*/
                obj_set@dpni {
                    type = "dpni";
                    ids = <1>;
                };
            };
        };
    };

    /*****************************************************************
     * Objects
     *****************************************************************/
    objects {

        dpbp@1 {
            compatible = "fsl,dpbp";
        };
```

```
        dpcon@1 {
            compatible = "fsl,dpcon";
            num_priorities = <0x2>;
        };

        dpio@1 {
            compatible = "fsl,dpio";
            channel_mode = "DPIO_LOCAL_CHANNEL";
            num_priorities = <0x8>;
        };

        dpmcp@1 {
            compatible = "fsl,dpmcp";
        };

        dpmcp@2 {
            compatible = "fsl,dpmcp";
        };

        dpni@1 {
            compatible = "fsl,dpni";
            type = "DPNI_TYPE_NIC";
            options = "DPNI_OPT_NO_FS";
            num_queues = <8>;
            num_tcs = <1>;
            mac_filter_entries = <16>;
            vlan_filter_entries = <0>;
            fs_entries = <0>;
            qos_entries = <0>;
        };
    };

    /*************************************************************
     * Connections
     *************************************************************/
    connections {

        connection@1{
            endpoint1 = "dpni@1";
            endpoint2 = "dpmac@1";
        };
    };
};
```

ANNEX 2 - vm_8_core.dts

```
/dts-v1/;
/ {
    dpl-version = <10>;
    /*************************************************************
     * Containers
     *************************************************************/
    containers {

        dprc@2 {
            compatible = "fsl,dprc";
            parent = "dprc.1";
            options = "DPRC_CFG_OPT_SPAWN_ALLOWED", "DPRC_CFG_OPT_ALLOC_ALLOWED",
"DPRC_CFG_OPT_OBJ_CREATE_ALLOWED", "DPRC_CFG_OPT_IRQ_CFG_ALLOWED";
```

```
            objects {

                /* -------------- DPBPs --------------*/
                obj_set@dpbp {
                    type = "dpbp";
                    ids = <1>;
                };

                /* -------------- DPCONs --------------*/
                obj_set@dpcon {
                    type = "dpcon";
                    ids = <1 2 3 4 5 6 7 8>;
                };

                /* -------------- DPIOs --------------*/
                obj_set@dpio {
                    type = "dpio";
                    ids = <1 2 3 4 5 6 7 8>;
                };

                /* -------------- DPMCPs --------------*/
                obj_set@dpmcp {
                    type = "dpmcp";
                    ids = <1 2 3 4 5 6 7 8 9>;
                };

                /* -------------- DPNIs --------------*/
                obj_set@dpni {
                    type = "dpni";
                    ids = <1>;
                };
            };
        };
    };

    /*****************************************************************
     * Objects
     *****************************************************************/
    objects {

        dpbp@1 {
            compatible = "fsl,dpbp";
        };

        dpcon@1 {
            compatible = "fsl,dpcon";
            num_priorities = <0x2>;
        };

        dpcon@2 {
            compatible = "fsl,dpcon";
            num_priorities = <0x2>;
        };

        dpcon@3 {
            compatible = "fsl,dpcon";
            num_priorities = <0x2>;
        };
```

```
        dpcon@4 {
            compatible = "fsl,dpcon";
            num_priorities = <0x2>;
        };

        dpcon@5 {
            compatible = "fsl,dpcon";
            num_priorities = <0x2>;
        };

        dpcon@6 {
            compatible = "fsl,dpcon";
            num_priorities = <0x2>;
        };

        dpcon@7 {
            compatible = "fsl,dpcon";
            num_priorities = <0x2>;
        };

        dpcon@8 {
            compatible = "fsl,dpcon";
            num_priorities = <0x2>;
        };

        dpio@1 {
            compatible = "fsl,dpio";
            channel_mode = "DPIO_LOCAL_CHANNEL";
            num_priorities = <0x8>;
        };

        dpio@2 {
            compatible = "fsl,dpio";
            channel_mode = "DPIO_LOCAL_CHANNEL";
            num_priorities = <0x8>;
        };

        dpio@3 {
            compatible = "fsl,dpio";
            channel_mode = "DPIO_LOCAL_CHANNEL";
            num_priorities = <0x8>;
        };

        dpio@4 {
            compatible = "fsl,dpio";
            channel_mode = "DPIO_LOCAL_CHANNEL";
            num_priorities = <0x8>;
        };

        dpio@5 {
            compatible = "fsl,dpio";
            channel_mode = "DPIO_LOCAL_CHANNEL";
            num_priorities = <0x8>;
        };

        dpio@6 {
            compatible = "fsl,dpio";
            channel_mode = "DPIO_LOCAL_CHANNEL";
            num_priorities = <0x8>;
        };
```

```
        dpio@7 {
            compatible = "fsl,dpio";
            channel_mode = "DPIO_LOCAL_CHANNEL";
            num_priorities = <0x8>;
        };

        dpio@8 {
            compatible = "fsl,dpio";
            channel_mode = "DPIO_LOCAL_CHANNEL";
            num_priorities = <0x8>;
        };

        dpmcp@1 {
            compatible = "fsl,dpmcp";
        };

        dpmcp@2 {
            compatible = "fsl,dpmcp";
        };

        dpmcp@3 {
            compatible = "fsl,dpmcp";
        };

        dpmcp@4 {
            compatible = "fsl,dpmcp";
        };

        dpmcp@5 {
            compatible = "fsl,dpmcp";
        };

        dpmcp@6 {
            compatible = "fsl,dpmcp";
        };

        dpmcp@7 {
            compatible = "fsl,dpmcp";
        };

        dpmcp@8 {
            compatible = "fsl,dpmcp";
        };

        dpmcp@9 {
            compatible = "fsl,dpmcp";
        };

        dpni@1 {
            compatible = "fsl,dpni";
            type = "DPNI_TYPE_NIC";
            options = "DPNI_OPT_NO_FS";
            num_queues = <8>;
            num_tcs = <1>;
            mac_filter_entries = <16>;
            vlan_filter_entries = <0>;
            fs_entries = <0>;
            qos_entries = <0>;
        };
```

```
    };

    /*******************************************************************
     * Connections
     *******************************************************************/
    connections {

        connection@1{
            endpoint1 = "dpni@1";
            endpoint2 = "dpmac@1";
        };
    };
};
```

10.1.3.9 How to use PCIE direct assignment

Select the PCIe device that will be assigned to Virtual Machine. For example, it is e1000e PCI network device (0000.01.00.0).

1. Bind the PCI device to the VFIO driver:
   - Assume e1000e device with identity 0000.01.00.0

     ```
     echo vfio-pci > /sys/bus/pci/devices/0000\:01\:00.0/driver_override
     echo 0000:01:00.0 > /sys/bus/pci/drivers/e1000e/unbind
     echo 0000:01:00.0 > /sys/bus/pci/drivers/vfio-pci/bind
     ```

2. All device in the `iommu-group` must be assigned to same virtual machine.
   - The command below will list all devices in the same `iommu-group`:

     ```
     ls -l /sys/bus/pci/devices/0000:06:0d.0/iommu_group/devices
     ```

   - All devices must be bound to VFIO using step (1) above.
3. Add the device command below to the QEMU command line for all devices in the `iommu-group`:

   ```
   -device vfio-pci,host=0000:01:00.0
   ```

4. Device will be available in Virtual Machine.

This feature is enabled for LS1088 and LS2088 devices only.

10.1.3.10 Passthrough of USB Devices

USB devices can be assigned to virtual machines. When the device is assigned to the virtual machine it becomes the private resource of the VM and it cannot be used by the host Linux. The virtual machine sees a XHCI USB controller on its PCI bus. The XHCI controller supports USB 3.0 devices.

There are 2 approaches for passing through a USB device:

1. by specifying the USB vendor ID and product ID of the device
2. by specifying the USB bus and port number

   In the examples below, the **-device nec-usb-xhci** argument specifies that a PCI-based XHCI USB controller should be added to the PCI bus. The **-device usb-host** identifies the specific USB device being passed through.

   To assign the device by vendor and product ID, first identify the device using the lsusb command. For example:

   ```
   root@localhost:~# lsusb
   Bus 004 Device 001: ID 1d6b:0003 Linux Foundation 3.0 root hub
   Bus 003 Device 001: ID 1d6b:0002 Linux Foundation 2.0 root hub
   ```

```
Bus 002 Device 001: ID 1d6b:0003 Linux Foundation 3.0 root hub
Bus 001 Device 002: ID 13fe:3600 Kingston Technology Company Inc. flash drive (4GB, EMTEC)
Bus 001 Device 001: ID 1d6b:0002 Linux Foundation 2.0 root hub
```

To assign the Kingston USB disk, specify the following -device arguments to QEMU:

```
-device nec-usb-xhci,id=xhci
-device usb-host,bus=xhci.0,vendorid=0x13fe,productid=0x3600
```

To assign the device by USB bus and host number, use the lsusb command:

```
root@localhost:~# lsusb -t
/:  Bus 04.Port 1: Dev 1, Class=root_hub, Driver=xhci-hcd/1p, 5000M
/:  Bus 03.Port 1: Dev 1, Class=root_hub, Driver=xhci-hcd/1p, 480M
/:  Bus 02.Port 1: Dev 1, Class=root_hub, Driver=xhci-hcd/1p, 5000M
/:  Bus 01.Port 1: Dev 1, Class=root_hub, Driver=xhci-hcd/1p, 480M
    |__ Port 1: Dev 2, If 0, Class=Mass Storage, Driver=usb-storage, 480M
```

In this example, the storage device can be seen on bus 1, port 1. The info usbhost in the QEMU monitor can also be used to display the host USB bus and port numbers for all USB devices.

To assign the Kingston USB disk by bus and port number, specify the following -device arguments to QEMU:

```
-device nec-usb-xhci,id=xhci
-device usb-host,bus=xhci.0,hostbus=1,hostport=1
```

10.1.3.11 Debugging: How to Examine Initial Virtual Machine State with QEMU

It can be helpful when debugging to examine the state of the virtual machine prior to executing the first instruction of the guest OS.

To do this, start QEMU with the -S option.

Example:

```
qemu-system-aarch64 -smp 8 -m 1024 -cpu host -machine type=virt,gic-version=3
-kernel /boot/Image -enable-kvm -display none -serial tcp::4446,server,telnet -
drive if=none,file=ubuntu_bionic_arm64_rootfs.ext4.img,id=foo,format=raw -device virtio-blk-
device,drive=foo -append 'root=/dev/vda rw console=ttyAMA0 rootwait earlyprintk' -monitor stdio -S
```

The console was started with the "-serial tcp::4446,server,telnet" option so QEMU waits for a connection prior to starting initialization. Use telnet to connect to port 4446 of the target.

At this point QEMU initializes the VM, but does not execute the entry point to the guest OS. The monitor prompt can now be used to examine initial state:

```
QEMU 2.5.0 monitor - type 'help' for more information
(qemu) QEMU waiting for connection on: disconnected:telnet::4446,server

(qemu)
```

To see where boot images are loaded and placed by QEMU use the **info roms** command:

```
(qemu) info roms
addr=0000000000000000 size=0x000038 mem=ram name="smpboot"
addr=0000000040000000 size=0x000028 mem=ram name="bootloader"
addr=0000000040080000 size=0xf0aa00 mem=ram name="/boot/Image"
addr=0000000048000000 size=0x010000 mem=ram name="dtb"
/rom@etc/acpi/tables size=0x200000 name="etc/acpi/tables"
/rom@etc/table-loader size=0x000880 name="etc/table-loader"
```

```
/rom@etc/acpi/rsdp size=0x000024 name="etc/acpi/rsdp"
(qemu)
```

A trivial bootloader is loaded at the start of guest memory at 0x40000000

The kernel image (zImage) is loaded at 0x40080000.

To examine the initial state of registers use the info registers command:

```
(qemu) info registers
PC=0000000040000000  SP=0000000000000000
X00=0000000000000000 X01=0000000000000000 X02=0000000000000000 X03=0000000000000000
X04=0000000000000000 X05=0000000000000000 X06=0000000000000000 X07=0000000000000000
X08=0000000000000000 X09=0000000000000000 X10=0000000000000000 X11=0000000000000000
X12=0000000000000000 X13=0000000000000000 X14=0000000000000000 X15=0000000000000000
X16=0000000000000000 X17=0000000000000000 X18=0000000000000000 X19=0000000000000000
X20=0000000000000000 X21=0000000000000000 X22=0000000000000000 X23=0000000000000000
X24=0000000000000000 X25=0000000000000000 X26=0000000000000000 X27=0000000000000000
X28=0000000000000000 X29=0000000000000000 X30=0000000000000000
PSTATE=400003c5 -Z-- EL1h
q00=0000000000000000:0000000000000000 q01=0000000000000000:0000000000000000
q02=0000000000000000:0000000000000000 q03=0000000000000000:0000000000000000
q04=0000000000000000:0000000000000000 q05=0000000000000000:0000000000000000
q06=0000000000000000:0000000000000000 q07=0000000000000000:0000000000000000
q08=0000000000000000:0000000000000000 q09=0000000000000000:0000000000000000
q10=0000000000000000:0000000000000000 q11=0000000000000000:0000000000000000
q12=0000000000000000:0000000000000000 q13=0000000000000000:0000000000000000
q14=0000000000000000:0000000000000000 q15=0000000000000000:0000000000000000
q16=0000000000000000:0000000000000000 q17=0000000000000000:0000000000000000
q18=0000000000000000:0000000000000000 q19=0000000000000000:0000000000000000
q20=0000000000000000:0000000000000000 q21=0000000000000000:0000000000000000
q22=0000000000000000:0000000000000000 q23=0000000000000000:0000000000000000
q24=0000000000000000:0000000000000000 q25=0000000000000000:0000000000000000
q26=0000000000000000:0000000000000000 q27=0000000000000000:0000000000000000
q28=0000000000000000:0000000000000000 q29=0000000000000000:0000000000000000
q30=0000000000000000:0000000000000000 q31=0000000000000000:0000000000000000
FPCR: 00000000  FPSR: 00000000
(qemu)
```

The program counter is set to 0x40000000 which is the effective address of the entry point of the kernel.

10.1.3.12 Debugging: How to Profile Virtualization Overhead with KVM

Running software in a virtual machine can cause additional overhead that affects performance. The virtualization overhead is directly related to the number of times the hypervisor (KVM) is invoked to handle exception conditions that may occur in the virtual machine. These exception handling events are referred to as 'exits', because guest context is exited.

Examples of exits include things such the guest executing a privileged instruction, access a privileged CPU register, accessing a virtual I/O device, or a hardware interrupt such as a decrementer interrupt.

The type and number of exits that occur is workload dependent.

KVM implements a mechanism in which different events are logged. These events are actually tracepoint events, and perf nicely integrates with them. You have to compile the host kernel with the following options:

```
Kernel hacking  --->
     [*] Tracers  --->
```

```
         [*]   Trace process context switches and events
```

Counting Events

A count of a subset of KVM events that occur can be seen under debugfs. To see this first mount debugfs:

```
mount -t debugfs none /sys/kernel/debug
```

The statistics can be seen using perf tool:

```
# perf stat -e "kvm:*" -p 1395
^C
 Performance counter stats for process id '1395':

              5678 kvm:kvm_entry
              5678 kvm:kvm_exit
              3121 kvm:kvm_guest_fault
              2278 kvm:kvm_irq_line
                 0 kvm:kvm_mmio_emulate
                 0 kvm:kvm_emulate_cp15_imp
              2438 kvm:kvm_wfi
                 0 kvm:kvm_unmap_hva
                 2 kvm:kvm_unmap_hva_range
                 0 kvm:kvm_set_spte_hva
                 0 kvm:kvm_hvc
              3119 kvm:kvm_userspace_exit
                 0 kvm:kvm_set_irq
                 0 kvm:kvm_ack_irq
              4068 kvm:kvm_mmio
                 0 kvm:kvm_fpu
                 0 kvm:kvm_age_page

      59.316709040 seconds time elapsed
```

Tracing events

Detailed traced can be generated using ftrace:

```
[enable ftrace in kernel: events and system calls]
$echo 1 > /sys/kernel/debug/tracing/events/kvm/enable
$cat /sys/kernel/debug/tracing/trace_pipe

qemu-system-arm-1366  [000] ....   716.115891: kvm_guest_fault: ipa 0x9000000, hsr 0x93430046, hxfar
0xa084c030, pc 0x80266a9c
qemu-system-arm-1366  [000] ....   716.115892: kvm_mmio: mmio write len 2 gpa 0x9000030 val 0xf01
qemu-system-arm-1366  [000] ....   716.115895: kvm_userspace_exit: reason KVM_EXIT_MMIO (6)
qemu-system-arm-1366  [000] d...   716.115907: kvm_entry: PC: 0x80266aa0
qemu-system-arm-1366  [000] d...   716.116234: kvm_exit: PC: 0x800cf508
qemu-system-arm-1366  [000] d...   716.118274: kvm_entry: PC: 0x800cf508
qemu-system-arm-1366  [000] d...   716.118704: kvm_exit: PC: 0x0000981c
qemu-system-arm-1366  [000] d...   716.120737: kvm_entry: PC: 0x0000981c
qemu-system-arm-1366  [000] d...   716.121159: kvm_exit: PC: 0x800bb104
qemu-system-arm-1366  [000] d...   716.123197: kvm_entry: PC: 0x800bb104
qemu-system-arm-1366  [000] d...   716.123620: kvm_exit: PC: 0x8009cae0
qemu-system-arm-1366  [000] d...   716.125696: kvm_entry: PC: 0x8009cae0
qemu-system-arm-1366  [000] d...   716.126091: kvm_exit: PC: 0x800c90f4
qemu-system-arm-1366  [000] d...   716.128130: kvm_entry: PC: 0x800c90f4
qemu-system-arm-1366  [000] d...   716.128561: kvm_exit: PC: 0x801f37f4
```

```
qemu-system-arm-1366  [000] d...   716.130594: kvm_entry: PC: 0x801f37f4
qemu-system-arm-1366  [000] d...   716.130623: kvm_exit: PC: 0x8020576c
qemu-system-arm-1366  [000] d...   716.130635: kvm_entry: PC: 0x8020576c
qemu-system-arm-1366  [000] d...   716.131018: kvm_exit: PC: 0x43014750
qemu-system-arm-1366  [000] d...   716.133053: kvm_entry: PC: 0x43014750
qemu-system-arm-1366  [000] d...   716.133478: kvm_exit: PC: 0x80205778
qemu-system-arm-1366  [000] d...   716.135555: kvm_entry: PC: 0x80205778
```

10.1.3.13 Debugging virtual machines

10.1.3.13.1 QEMU Monitor

When starting QEMU, a monitor shell is available that can be used to control and see the state of VM. By default this monitor is started in the Linux shell where QEMU is invoked.

See example below of the output when starting QEMU. The user can interact with the monitor at the (qemu) prompt.

```
QEMU 2.5.0 monitor - type 'help' for more information
(qemu) QEMU waiting for connection on: disconnected:telnet::4446,server
```

The monitor can also be exposed over a network port by using the `-monitor dev` command line option. See Overview of Using QEMU and the QEMU user's manual [1] (see References).

Refer to the QEMU user's manual [1] for a complete listing of the monitor commands available. Below is a list of some useful commands supported in the NXP SDK implementation of QEMU:

- **help** - lists all the available commands with usage information
- **info cpus** - displays the state and thread ID of all virtual CPUs
- **info** *registers* - displays the contents of the default vcpu's registers
- **cpu cpu_number** - sets the default vcpu number
- **system_reset** - resets the VM
- **x**/*fmt addr* -- virtual memory dump starting at 'addr'
- **xp**/*fmt addr* -- physical memory dump starting at 'addr'

10.1.3.13.2 QEMU GDB Stub

QEMU supports debugging of a VM using gdb. QEMU contains a gdb stub that can be attached to from a host system and allows standard source level debugging capabilities to examine the state of the VM and do run control.

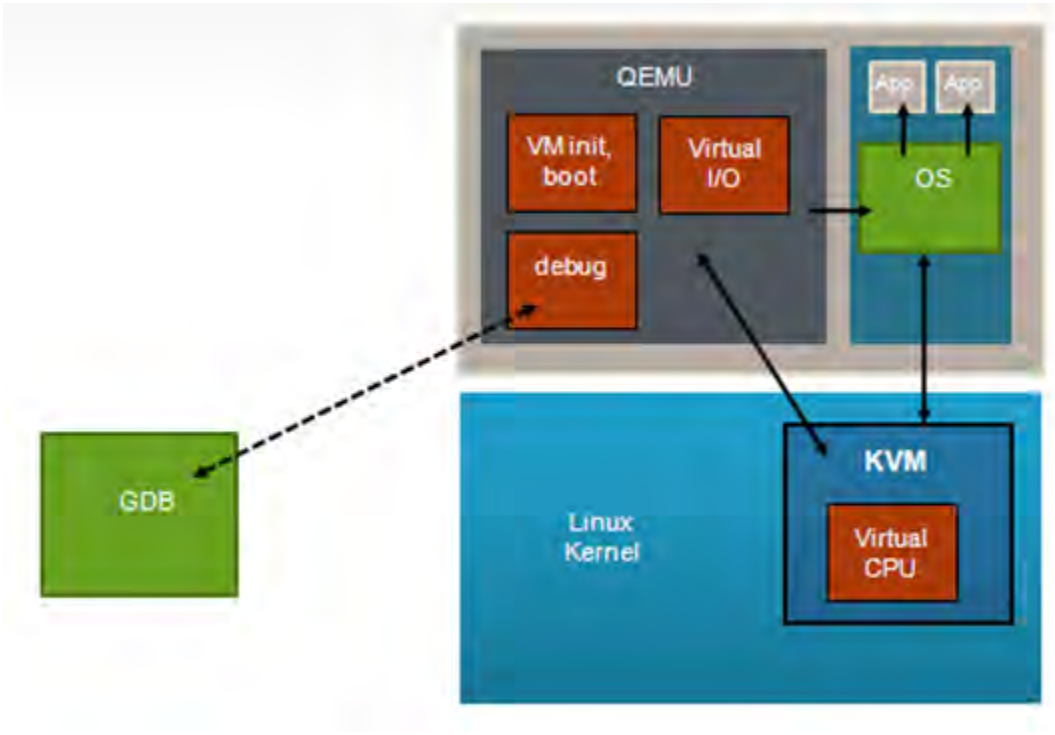

Figure 239.

To use the gdb stub, start QEMU with the -gdb *dev* option where dev specifies the type of connection to be used. See the QEMU user's manual [1] (see References) for details.

One useful option when debugging is the -S argument to QEMU which causes QEMU to wait to start the first instruction of the guest until told to start using the monitor (**continue** command).

In the example below the tcp device type is used. A gdb stub will be active on port 4445 of the host Linux kernel when starting QEMU:

```
qemu-system-aarch64 -smp 8 -m 1024 -cpu host -machine type=virt,gic-version=3
-kernel /boot/Image -enable-kvm -display none -serial tcp::4446,server,telnet -
drive if=none,file=ubuntu_bionic_arm64_rootfs.ext4.img,id=foo,format=raw -device virtio-blk-
device,drive=foo -append 'root=/dev/vda rw console=ttyAMA0 rootwait earlyprintk' -monitor stdio -gdb
tcp::4444
```

After the guest has been started normally, gdb can be used to connect to the VM (in this example the host kernel has an ip address of 192.168.3.30):

```
(gdb) target remote 192.168.4.100:4444
Remote debugging using 192.168.4.100:4444
0xffff000008096258 in ?? ()
```

Debugging with gdb can then proceed normally:

```
(gdb) p/x $pc
$4 = 0xffff000008096258
```

10.2 Linux Containers (LXC) for NXP QorIQ User's Guide

10.2.1 Introduction to Linux Containers

10.2.1.1 NXP LXC Release Notes

This document describes current limitations in the release of LXC for NXP SoCs.

```
Copyright (C) 2017 NXP Semiconductors, Inc.

NXP LXC Release Notes
04/27/2016

Overview
--------
This document describes new features, current limitations, and
working demos in Linux Containers (LXC) for QorIQ Layerscape SDK.


Fixes
-----
  o Seccomp support on ARMv8 platforms.

  o Unprivileged containers support on ARMv8 platforms.


SDK Demo List
-----
  o Basic container usage flow and management commands
  o Container networking setups
       o Shared networking
       o Private NICs
       o Ethernet bridge
       o MACVLAN
       o VLAN
  o Adjusting container capabilities
  o Tuning container resource usage
  o Running application containers
  o Isolating USDPAA applications in LXC containers. This has been
    tested using the USDPAA reflector app in a Multiple Instance Scenario
    on a DPAA board. After parititioning the board resources in order to
    support multiple reflector instances, these have been further isolated
    in container environments.
  o Running an unprivileged container linked to a host bridge.
  o Running containers with Seccomp protection.
```

10.2.1.2 Overview

This document is a guide and tutorial to using Linux Containers on NXP ARMv7 and ARMv8-based SoCs.

Linux Containers is a lightweight virtualization technology that allows the creation of environments in Linux called "**containers**" in which Linux applications can be run in isolation from the rest of the system and with fine grained control over resources allocated to the container (e.g. CPU, memory, network).

There are 2 implementations of containers in the LSDK:

- LXC. LXC is a user space package that provides a set of commands to create and manage containers and uses existing Linux kernel features to accomplish the desired isolation and control.
- Libvirt. The libvirt package is a virtualization toolkit that provides a set of management tools for managing virtual machines and Linux containers. The libvirt driver for containers is called "lxc", but the libvirt "lxc" driver is distinct from the user space LXC package.

Applications in a container run in a "sandbox" and can be restricted in what they can do and what visibility they have. In a container:

- An application "sees" only other processes that are in the container.
- An application has access only to network resources granted to the container.
- If configured as such, an application "sees" only a container-specific root filesystem. In addition to limiting access to data in the system's host rootfs, by limiting the */dev* entries that exist in the containers rootfs this limits the devices that the container can access.
- The file POSIX capabilities available to programs are controlled and configured by the system administrator.
- The container's processes run in what is known as a "control group" which the system administrator can use to monitor and control the container's resources.

Why are containers useful? Below are a few examples of container use cases:

- **Application partitioning** -- control CPU utilization between high priority and low priority applications, control what resources applications can access.
- **Virtual private server** -- boot multiple instances of user space, each which effectively looks like a private instance of a server. This approach is commonly used in website infrastructure.
- **Software upgrade** -- run Linux user space in a container, when it becomes necessary to upgrade applications in the system, create and test upgraded software in a new container. The old container can be stopped and the new container can be started as desired.
- **Terminal servers** -- user accesses the system with a thin client, with containers on the server providing applications. Each user gets a private, sandboxed workspace.

There are two general usage models for containers:

- **application containers**: Running a single application in a container. In this scenario, a single executable program is started in the container.
- **system containers**: Booting an instance of user space in a container. Booting multiple system containers allows multiple isolated instances of user space to run at the same time.

Containers are conceptually different than virtual machine technologies such as QEMU/KVM. Virtual machines emulate a hardware platform and are capable of booting an operating system kernel. A container is a mechanism to isolate Linux applications. In a system using containers there is only one Linux kernel running -- the host Linux kernel.

10.2.1.3 Comparing LXC and Libvirt

LXC and the lxc driver in libvirt provide similar capabilities and use the same kernel mechanisms to create containers. This section highlights some of the differences between the two tools.

LXC

- Container management is done with local LXC package commands. No remote support.
- Container creation done with **lxc-create**. LXC config file and template govern the creation of the template and the container's rootfs.

libvirt

- libvirt abstracts the container and thus a variety of tools can be used to manage containers.
- Remote management is supported.
- Container configuration defined in libvirt XML file.
- No tools to facilitate container creation.
- Same tools can be used to manage containers and KVM/QEMU virtual machines.

10.2.1.4 For Further Information

Linux containers is an approach to virtualization similar to OS virtualization solutions such as Linux VServer and OpenVZ that are widely used for virtual private servers. Documentation for these projects has helpful and relevant information:

- http://linux-vserver.org/Overview
- http://wiki.openvz.org/Main_Page

The LXC package is an open source project and much information is available online.

General Information

- libvirt LXC driver: http://libvirt.org/drvlxc.html
- Getting started with LXC using libvirt : https://www.berrange.com/posts/2011/09/27/getting-started-with-lxc-using-libvirt/
- LXC: Official web page for the LXC project: https://linuxcontainers.org/
- LXC: Overview article on LXC on IBM developerWorks (2009): http://www.ibm.com/developerworks/linux/library/l-lxc-containers/
- LXC manpages: https://linuxcontainers.org/lxc/manpages/
- Article on POSIX file capabilities: http://www.friedhoff.org/posixfilecaps.html
- SUSE LXC tutorial: https://www.suse.com/documentation/sles11/singlehtml/lxc_quickstart/lxc_quickstart.html
- LXC Linux Containers, presentation: http://www.slideshare.net/samof76/lxc-17456998
- Stephane Graber's LXC 1.0 blog posts: https://www.stgraber.org/2013/12/20/lxc-1-0-blog-post-series/
- Linux Plumbers 2013 videos: https://www.youtube.com/channel/UCIxsmRWj3-795FMlrsikd3A/videos
- Control Groups: https://www.kernel.org/doc/Documentation/cgroup-v1/cgroups.txt

Containers and Security

If using containers to sandbox untrusted applications, a thorough understanding is needed of the capabilities granted to a container and the security vulnerabilities they may imply. The following references are helpful for understanding container security:

- Ubuntu's security issues and mitigations with LXC, https://wiki.ubuntu.com/LxcSecurity
- Emeric Nasi, Exploiting capabilities, http://packetstorm.foofus.com/papers/attack/exploiting_capabilities_the_dark_side.pdf
- Secure containers with SELinux and Smack, http://www.ibm.com/developerworks/linux/library/l-lxc-security/index.html
- Seccomp and sandboxing, http://lwn.net/Articles/332974/

Mailing Lists

For LXC, there are two mailing lists available which can be subscribed to. Archives of the lists are also available.

```
https://lists.linuxcontainers.org/listinfo/lxc-devel
```

```
https://lists.linuxcontainers.org/listinfo/lxc-users
```

10.2.2 More Details

10.2.2.1 LXC: Command Reference

This section contains links to available open source documentation for the commands in the LXC user space package.

Table 186.

LXC man page	Description	Man Page Link
lxc	lxc overview	click here
lxc-attach	start a process inside a running container	click here
lxc-autostart	start/stop/kill auto-started containers	click here
lxc-cgroup	manage the control group associated with a container	click here
lxc-checkconfig	check the current kernel for lxc support	click here
lxc-clone	clone a new container from an existing one	click here
lxc-config	query LXC system configuration	click here
lxc.conf	a description of all configuration options available	click here
lxc-console	launch a console for the specified container	click here
lxc-create	creates a container	click here
lxc-destroy	destroy a container previously created with lxc-create	click here
lxc-execute	run the specified command inside a container	click here
lxc-freeze	freeze (suspend) all the container's processes	click here
lxc-info	query information about a container	click here
lxc-ls	list the containers existing on the system	click here
lxc-monitor	monitor the container state	click here
lxc-snapshot	snapshot an existing container	click here
lxc-start	starts a container previously created with lxc-create	click here
lxc-stop	stop a container	click here
lxc-unfreeze	resumes a containers processes suspended previously with lxc-freeze	click here
lxc-unshare	run a task in a new set of namespaces	click here
lxc-usernsexec	run task as root in a new user namespace	click here
lxc-wait	wait for a specific container state	click here

The following LXC commands are not supported:

- lxc-usernsexec

10.2.2.2 LXC: Configuration Files

NOTE

This section is applicable to LXC only, not to libvirt.

For LXC, configuration files are used to configure aspects of a container at the time it is created. The configuration file defines what resources are private to the container and what is shared. By default the following resources are private to a container:

- process IDs
- sysv ipc mechanisms
- mount points

This means for example, that by default the container will share network resources and the filesystem with the host system, but will have it's own private process IDs.

The container configuration file allows additional isolation to be specified through configuration in the following areas:

- network
- console
- mount points and the backing store for the root filesystem
- control groups (cgroups)
- POSIX capabilities

See the http://man7.org/linux/man-pages/man5/lxc.conf.5.html for details on each configuration option.

When a container is created a new directory with the container's name is created in /var/lib/lxc. The configuration file for the container is stored in:

```
    /var/lib/lxc/[container-name]/config
```

Below is an example of the contents of a minimal configuration file for a container named "foo", which has no networking:

```
$ cat /var/lib/lxc/foo/config
# Container with non-virtualized network
lxc.utsname = foo
lxc.tty = 1
lxc.pts = 1
lxc.rootfs = /var/lib/lxc/foo/rootfs
lxc.mount.entry=/lib /var/lib/lxc/foo/rootfs/lib none ro,bind 0 0
lxc.mount.entry=/usr/lib /var/lib/lxc/foo/rootfs/usr/lib none ro,bind 0 0
```

See the LXC: Getting Started (with a Busybox System Container) how-to article for an introduction to the container lifecycle and how configuration files are used when creating containers.

Several example configuration files are provided with LXC:

```
/usr/share/doc/lxc-common/examples/lxc-complex.conf
/usr/share/doc/lxc-common/examples/lxc-empty-netns.conf
/usr/share/doc/lxc-common/examples/lxc-macvlan.conf
/usr/share/doc/lxc-common/examples/lxc-no-netns.conf
/usr/share/doc/lxc-common/examples/lxc-phys.conf
/usr/share/doc/lxc-common/examples/lxc-veth.conf
/usr/share/doc/lxc-common/examples/lxc-vlan.conf
/usr/share/doc/lxc-common/examples/seccomp-v1.conf
/usr/share/doc/lxc-common/examples/seccomp-v2-blacklist.conf
/usr/share/doc/lxc-common/examples/seccomp-v2.conf
```

10.2.2.3 LXC: Templates

NOTE

This section is applicable to LXC only, not to libvirt.

For LXC, When a container is "created" a directory for the container (which has the same name as the container) is created under /var/lib/lxc. This is where the container's configuration file is stored and can be edited.

For system containers (containers created with **lxc-create**), the default is for the root filesystem structure of the container to be stored here as well.

Creating containers is simplified by the use of example "templates" provided with the LXC. Template examples are provided for a number of different Linux distributions. A template is a script invoked by **lxc-create** that creates the root filesystem structure and sets up the container's config file.

The following example templates are provided with LXC and can be referred to for the expected template structure:

```
/usr/share/lxc/templates/lxc-alpine
/usr/share/lxc/templates/lxc-altlinux
/usr/share/lxc/templates/lxc-archlinux
/usr/share/lxc/templates/lxc-busybox
/usr/share/lxc/templates/lxc-centos
/usr/share/lxc/templates/lxc-cirros
/usr/share/lxc/templates/lxc-debian
/usr/share/lxc/templates/lxc-download
/usr/share/lxc/templates/lxc-fedora
/usr/share/lxc/templates/lxc-gentoo
/usr/share/lxc/templates/lxc-openmandriva
/usr/share/lxc/templates/lxc-opensuse
/usr/share/lxc/templates/lxc-oracle
/usr/share/lxc/templates/lxc-plamo
/usr/share/lxc/templates/lxc-sshd
/usr/share/lxc/templates/lxc-ubuntu
/usr/share/lxc/templates/lxc-ubuntu-cloud
```

For the NXP LSDK the busybox template is recommended and has been tested with flex-builder created root filesystems.

The how-to examples provided in this user guide that create system containers use the busybox template.

10.2.2.4 Containers with Libvirt

This section provides an overview to using libvirt-based containers.

For an general introduction to libvirt, please see the container information available on the libvirt website: http://libvirt.org/drvlxc.html.

With libvirt, a container "domain" is specified in an XML file. The XML is used to "define" the container, which then allows the container to be managed with the standard libvirt domain lifecycle.

Libvirt XML

The XML for the simplest functional container would look like the example below:

```
<domain type='lxc'>
  <name>container1</name>
  <memory>500000</memory>
  <os>
    <type>exe</type>
    <init>/bin/sh</init>
  </os>
  <devices>
    <console type='pty'/>
  </devices>
</domain>
```

Refer to the XML reference information available on the libvirt website for detailed reference information: http://libvirt.org/formatdomain.html

The <domain> element must specify a type attribute of "lxc" for a container/lxc domain. There are 4 additional sub-nodes required:

- <name> - specifies the name of the container

- <memory> - specifies the maximum memory the container may use
- <os> - identifies the initial program to run. In the example this is /bin/sh. For an application based container this is the name of the application. If booting an instance of Linux user space this would typically by /sbin/init.
- <devices> - specifies any devices, in the above example there is just a console

Filesystem mounts (from http://libvirt.org/drvlxc.html)

In the absence of any explicit configuration, the container will inherit the host OS filesystem mounts. A number of mount points will be made read only, or re-mounted with new instances to provide container specific data. The following special mounts are setup by libvirt:

- /dev a new "tmpfs" pre-populated with authorized device nodes
- /dev/pts a new private "devpts" instance for console devices
- /sys the host "sysfs" instance remounted read-only
- /proc a new instance of the "proc" filesystem
- /proc/sys the host "/proc/sys" bind-mounted read-only
- /sys/fs/selinux the host "selinux" instance remounted read-only
- /sys/fs/cgroup/NNNN the host cgroups controllers bind-mounted to only expose the sub-tree associated with the container
- /proc/meminfo a FUSE backed file reflecting memory limits of the container

Additional filesystem mounts can be created using the <filesystem> node under the <devices> node. See the libvirt.org documentation referenced above for further details.

Device nodes from http://libvirt.org/drvlxc.html

The container init process will be started with CAP_MKNOD capability removed and blocked from re-acquiring it. As such it will not be able to create any device nodes in /dev or anywhere else in its filesystems. Libvirt itself will take care of pre-populating the /dev filesystem with any devices that the container is authorized to use. The current devices that will be made available to all containers are:

- /dev/zero
- /dev/null
- /dev/full
- /dev/random
- /dev/urandom
- /dev/stdin symlinked to /proc/self/fd/0
- /dev/stdout symlinked to /proc/self/fd/1
- /dev/stderr symlinked to /proc/self/fd/2
- /dev/fd symlinked to /proc/self/fd
- /dev/ptmx symlinked to /dev/pts/ptmx
- /dev/console symlinked to /dev/pts/0

10.2.2.5 Linux Control Groups (cgroups)

Linux control groups (or cgroups) is a feature of the Linux kernel that allows the allocation, prioritization,control, and monitoring of resources such as CPU time, memory, network bandwidth among groups of Linux processes.

Cgroups is one of the underlying Linux kernel features that LXC is built upon. LXC automatically creates a cgroup for each container when it is started. A pre-requisite for using LXC is mounting the cgroup virtual filesystem.

Cgroups encompass a number of different subsystems or "controllers" that are used for managing and controlling different resources. The following subsystems/controllers are supported:

- cpu - controls CPU allocation for tasks in a cgroup;
- cpuset - assigns individual CPUs and memory nodes to tasks in a cgroup;
- cpuacct - generates automatic reports on CPU resources used by the tasks in a cgroup;
- memory - isolates the memory behavior of a group of tasks from the rest of the system;
- devices - allows or denies access to devices by tasks in a crgroup;
- freezer - suspends or resumes tasks in a cgroup;
- net_cls - tags packets with a class identifier that allows the Linux traffic controller to identify packets originating from a particular cgroup;
- net_prio - provides a way to dynamically set the priority of network traffic per each network interface for applications within various cgroups;
- blkio - controls and monitors access to I/O on block devices by tasks in cgroups.

Check out the Red Hat documentation on cgroups here: https://access.redhat.com/site/documentation/en-US/Red_Hat_Enterprise_Linux/6/html/Resource_Management_Guide/ch-Subsystems_and_Tunable_Parameters.html.

Cgroup subsystems can be configured within the configuration file used when creating a container. The configuration file accepts cgroup configuration in the following form:

```
lxc.cgroup.[subsystem name] = <value>
```

See the http://man7.org/linux/man-pages/man5/lxc.conf.5.html for further details.

Cgroup subsystems can also be displayed or updated while a container is running using the **lxc-cgroup** command:

```
lxc-cgroup -n [container-name] [cgroup-subsystem] [value]
```

For some examples of how to use cgroups to control container configuration, see the article: LXC: How to use cgroups to manage and control a containers resources.

10.2.2.6 Linux Namespaces

Linux namespaces is a feature in the Linux kernel that allows one to unshare and isolate a processes' resources like UTS, PID, IPC, file system mount and network from their parent. To achieve this the kernel places the resources in different namespaces.

When LXC spawns the container's main process it unshares all these resources except the network. The network is controlled from the configuration file and is shared by default.

A network namespace provides an isolated view of the networking stack (network device interfaces, IPv4 and IPv6 protocol stacks, IP routing tables, firewall rules, the /proc/net and /sys/class/net directory trees, sockets, etc.). A physical network device can live in exactly one network namespace. A virtual network device ("veth") pair provides a pipe-like abstraction that can be used to create tunnels between network namespaces, and can be used to create a bridge to a physical network device in another namespace. When a network namespace is freed (i.e., when the last process in the namespace terminates), its physical network devices are moved back to the initial network namespace (not to the parent of the process).

Each namespace is documented in the Linux **clone** man page. See: clone (2)

10.2.2.7 POSIX Capabilities

Linux supports the concept of file "capabilities" which provides fine grained control over what executable programs are permitted to do. Instead of the "all or nothing" paradigm where a super-user or "root" has the power to perform all operations, capabilities provide a mechanism to grant a specific program specific capabilities.

LXC uses this feature of the kernel to implement containers. By default processes running in a container will have **all** capabilities, but this can be configured. Capabilities can be dropped in the container's configuration file. See LXC: Configuration Files.

For example, to drop the CAP_SYS_MODULE, CAP_MKNOD, CAP_SETUID, and CAP_NET_RAW capabilities, the following configuration file options would be specified:

```
lxc.cap.drop = sys_module mknod setuid net_raw
```

Each capability is documented in the Linux **capabilities** man page. See: capabilities (7)

In order to fully isolate a container, the capabilities to be dropped must be carefully considered. The Linux Vserver project considers only the following capabilities as **safe** for virtual private servers:

```
CAP_CHOWN
CAP_DAC_OVERRIDE
CAP_DAC_READ_SEARCH
CAP_FOWNER
CAP_FSETID
CAP_KILL
CAP_SETGID
CAP_SETUID
CAP_NET_BIND_SERVICE
CAP_SYS_CHROOT
CAP_SYS_PTRACE
CAP_SYS_BOOT
CAP_SYS_TTY_CONFIG
CAP_LEASE
```

(see: http://linux-vserver.org/Paper#Secure_Capabilities)

10.2.3 LXC: How To's

10.2.3.1 LXC: Getting Started (with a Busybox System Container)

The following article describes steps to run a simple container example. All the command below are issued from a host Linux command prompt.

1. Confirm that your kernel environment is configured correctly using **lxc-checkconfig**. All options should show as 'enabled.

```
# lxc-checkconfig
--- Namespaces ---
Namespaces: enabled
Utsname namespace: enabled
Ipc namespace: enabled
Pid namespace: enabled
User namespace: enabled
Network namespace: enabled

--- Control groups ---
Cgroup: enabled
Cgroup clone_children flag: enabled
Cgroup device: enabled
Cgroup sched: enabled
Cgroup cpu account: enabled
Cgroup memory controller: enabled
Cgroup cpuset: enabled

--- Misc ---
Veth pair device: enabled
Macvlan: enabled
```

```
Vlan: enabled
Bridges: enabled
Advanced netfilter: enabled
CONFIG_NF_NAT_IPV4: enabled
CONFIG_NF_NAT_IPV6: enabled
CONFIG_IP_NF_TARGET_MASQUERADE: enabled
CONFIG_IP6_NF_TARGET_MASQUERADE: enabled
CONFIG_NETFILTER_XT_TARGET_CHECKSUM: enabled
FUSE (for use with lxcfs): enabled

--- Checkpoint/Restore ---
checkpoint restore: missing
CONFIG_FHANDLE: enabled
CONFIG_EVENTFD: enabled
CONFIG_EPOLL: enabled
CONFIG_UNIX_DIAG: enabled
CONFIG_INET_DIAG: enabled
CONFIG_PACKET_DIAG: enabled
CONFIG_NETLINK_DIAG: enabled
File capabilities: enabled
```

Note: Before booting a new kernel, you can check its configuration

Usage : `CONFIG=/path/to/config /usr/bin/lxc-checkconfig`

If the cgroup namespace option shows as required:

```
Cgroup namespace: required
```

The `/cgroup` directory most likely needs to be created and or mounted.

2. Create a container

   Create a system container using lxc-create and specify the busybox template and lxc-empty-netns.conf config file. lxc-empty-netns.conf is a simple config file with no networking:

```
lxc-create -n foo -t busybox -f /usr/share/doc/lxc-common/examples/lxc-empty-netns.conf
setting root password to "root"
Password for 'root' changed
#
```

   By default, LXC will try to install the dropbear ssh utility, if it's available on the host system. The Busybox template also has support for installing OpenSSH (assuming it's installed on the host Linux) in the container. This needs to be passed explicitly using a command line parameter:

```
# lxc-create -n foo -t busybox -f /usr/share/doc/lxc-common/examples/lxc-empty-netns.conf -- -
s openssh
setting root password to "root"
Password for 'root' changed
'OpenSSH' ssh utility installed
#
```

3. List containers that exist

```
# lxc-ls -f
NAME STATE   AUTOSTART GROUPS IPV4 IPV6
foo  STOPPED 0         -      -    -
```

4. From a shell on the host Linux, start the container. When prompted, press 'Enter'.

```
# lxc-start -n foo -F

Please press Enter to activate this console.

/ #

/ #
```

Note that the shell is now running within the container. Normal Linux commands can be executed.

Important notice: while this mode starts the container and directly connects to one of its terminals, there is a minor caveat: the terminal will be stuck in this container console until the container is halted (either from here, by running **halt**, or from another terminal by running **lxc-stop**). In order to avoid this, there is also the possibility to start the container as a daemon and connect to it using **lxc-console** (this is the default mode). This provides better terminal capabilities and the user is not forced to stop the container from another terminal. On the other hand, there is no indication that after running **lxc-start** the container has actually started - no errors are reported. You must check if the container is running yourself, using **lxc-info** - see below.

```
# lxc-start -n foo
# lxc-console -n foo

Type <Ctrl+a q> to exit the console, <Ctrl+a Ctrl+a> to enter Ctrl+a itself

foo login: root
Password: (root)
~ #
~ #
~ #
~ # (Ctrl+a q)
#
```

This will be the preferred mode of starting and connecting to containers.

5. List processes in the container.

From in the container shell use the ps command to list processes:

```
~ # ps
  PID USER       VSZ STAT COMMAND
    1 root      2384 S    init
    4 root      2384 S    /bin/syslogd
    6 root      2388 S    -sh
    7 root      2384 S    init
    8 root      2388 R    ps
```

Note process IDs have a number-space unique to the container.

6. Show the status of the foo container (from a host shell):

```
# lxc-info -n foo
Name:           foo
State:          RUNNING
PID:            4544
CPU use:        0.01 seconds
Memory use:     472.00 KiB
KMem use:       0 bytes
```

7. Look at the files/directories in /var/lib/lxc related to the container

```
# ls -l /var/lib/lxc/foo
total 2
-rw-r--r--  1 root root  675 May 30 15:37 config
drwxr-xr-x 16 root root 1024 May 30 15:44 rootfs
```

This shows the containers config file and rootfs backing store.

Look at the contents of the config file:

```
# cat /var/lib/lxc/foo/config
# Template used to create this container: /usr/share/lxc/templates/lxc-busybox
# Parameters passed to the template:
# For additional config options, please look at lxc.conf(5)
lxc.utsname = omega
lxc.network.type = empty
lxc.network.flags = up
lxc.rootfs = /var/lib/lxc/foo/rootfs
lxc.haltsignal = SIGUSR1
lxc.utsname = foo
lxc.tty = 1
lxc.pts = 1
lxc.cap.drop = sys_module mac_admin mac_override sys_time

# When using LXC with apparmor, uncomment the next line to run unconfined:
#lxc.aa_profile = unconfined
lxc.mount.entry = /lib lib none ro,bind 0 0
lxc.mount.entry = /usr/lib usr/lib none ro,bind 0 0
lxc.mount.entry = /sys/kernel/security sys/kernel/security none ro,bind,optional 0 0
lxc.mount.auto = proc:mixed sys
```

8. Start a process inside the container using lxc-attach. This command will run the process inside the system container's isolated environment. The container has to be running already.

```
# lxc-attach -n foo -- /bin/sh
root@foo:/# ps
PID   USER     TIME   COMMAND
    1 root       0:00 init
    6 root       0:00 /bin/syslogd
    8 root       0:00 /bin/getty -L tty1 115200 vt100
    9 root       0:00 init
   10 root       0:00 /bin/sh
   11 root       0:00 ps
root@foo:/# ls -l /dev
total 0
crw-rw-rw-    1 root     5         136,   1 May 26 13:13 console
lrwxrwxrwx    1 root     root            13 May 26 13:12 fd -> /proc/self/fd
lrwxrwxrwx    1 root     root             7 May 26 13:13 kmsg -> console
srw-rw-rw-    1 root     root             0 May 26 13:13 log
crw-rw-rw-    1 root     root        1,   3 May 26 13:10 null
lrwxrwxrwx    1 root     root            13 May 26 13:12 ptmx -> /dev/pts/ptmx
drwxr-xr-x    2 root     root             0 May 26 13:13 pts
brw-------    1 root     root        1,   0 May 26 13:10 ram0
drwxrwxrwt    2 root     root            40 May 26 13:13 shm
lrwxrwxrwx    1 root     root            15 May 26 13:12 stderr -> /proc/self/fd/2
lrwxrwxrwx    1 root     root            15 May 26 13:12 stdin -> /proc/self/fd/0
lrwxrwxrwx    1 root     root            15 May 26 13:12 stdout -> /proc/self/fd/1
crw-rw-rw-    1 root     root        5,   0 May 26 13:10 tty
crw-rw-rw-    1 root     root        4,   0 May 26 13:10 tty0
```

```
crw--w----    1 root     root      136,   0 May 26 13:13 tty1
crw-rw-rw-    1 root     root        4,   0 May 26 13:10 tty5
crw-rw-rw-    1 root     root        1,   9 May 26 13:10 urandom
crw-rw-rw-    1 root     root        1,   5 May 26 13:10 zero
root@foo:/#
```

9. Stop the container (from a host shell)

```
# lxc-stop -n foo
#
# lxc-info -n foo
Name:           foo
State:          STOPPED
```

10. Destroy the container. This removes the containers config file and backing store.

```
# lxc-destroy -n foo
#
```

10.2.3.2 LXC: How to configure non-virtualized networking (lxc-no-netns.conf)

One approach to providing networking capability to a container is to simply allow the container to use existing host network interfaces. To accomplish this, a configuration file is created with no networking setup (i.e. the **lxc.network.type** property is not set) and the default will be to allow the container to access the host's networking interfaces.

With this approach no network namespace is created for the container.

An example config is provided:

```
/usr/share/doc/lxc-common/examples/lxc-no-netns.conf
```

The contents of lxc-no-netns.conf look like this:

```
# Container with non-virtualized network
lxc.network.type = none
lxc.utsname = delta
```

The example below shows starting an application container (running bash) with this config file and shows that the host network interface `enp1s0` is inherited and accessible by the container:

```
# lxc-execute -n mytest -f /usr/share/doc/lxc-common/examples/lxc-no-netns.conf -- /bin/bash
root@delta:/root# ifconfig
docker0   Link encap:Ethernet  HWaddr 02:42:b0:95:11:e0
          inet addr:172.17.0.1  Bcast:0.0.0.0  Mask:255.255.0.0
          inet6 addr: fe80::42:b0ff:fe95:11e0/64 Scope:Link
          UP BROADCAST MULTICAST  MTU:1500  Metric:1
          RX packets:18 errors:0 dropped:0 overruns:0 frame:0
          TX packets:15 errors:0 dropped:0 overruns:0 carrier:0
          collisions:0 txqueuelen:0
          RX bytes:4568 (4.5 KB)  TX bytes:1236 (1.2 KB)

enp1s0    Link encap:Ethernet  HWaddr 68:05:ca:36:9d:75
          inet addr:192.168.1.20  Bcast:0.0.0.0  Mask:255.255.248.0
          inet6 addr: fe80::6a05:caff:fe36:9d75/64 Scope:Link
          UP BROADCAST RUNNING MULTICAST  MTU:1500  Metric:1
          RX packets:94306 errors:0 dropped:0 overruns:0 frame:0
          TX packets:40146 errors:0 dropped:0 overruns:0 carrier:0
          collisions:0 txqueuelen:1000
```

```
          RX bytes:138650604 (138.6 MB)  TX bytes:2922616 (2.9 MB)
          Interrupt:100 Memory:30460c0000-30460e0000

lo        Link encap:Local Loopback
          inet addr:127.0.0.1  Mask:255.0.0.0
          inet6 addr: ::1/128 Scope:Host
          UP LOOPBACK RUNNING  MTU:65536  Metric:1
          RX packets:1018 errors:0 dropped:0 overruns:0 frame:0
          TX packets:1018 errors:0 dropped:0 overruns:0 carrier:0
          collisions:0 txqueuelen:1000
          RX bytes:78782 (78.7 KB)  TX bytes:78782 (78.7 KB)

lxcbr0    Link encap:Ethernet  HWaddr 00:16:3e:00:00:00
          inet addr:10.0.3.1  Bcast:0.0.0.0  Mask:255.255.255.0
          UP BROADCAST MULTICAST  MTU:1500  Metric:1
          RX packets:0 errors:0 dropped:0 overruns:0 frame:0
          TX packets:0 errors:0 dropped:0 overruns:0 carrier:0
          collisions:0 txqueuelen:1000
          RX bytes:0 (0.0 B)  TX bytes:0 (0.0 B)
```

10.2.3.3 LXC: How to assign a physical network interface to a container (lxc-phys.conf)

One approach to providing networking capability to a container is to directly assign an available, unused network interface to the container. The interface is not shared, it becomes the private resource of the container.

An example LXC configuration file is provided to configure this type of networking:

```
/usr/share/doc/lxc-common/examples/lxc-phys.conf
```

The contents of the default lxc-phys.conf example are show below:

```
# Container with network virtualized using a physical network device with name
# 'eth0'
lxc.utsname = gamma
lxc.network.type = phys
lxc.network.flags = up
lxc.network.link = eth0
lxc.network.hwaddr = 4a:49:43:49:79:ff
lxc.network.ipv4 = 10.2.3.6/24
lxc.network.ipv6 = 2003:db8:1:0:214:1234:fe0b:3297
```

Note: The network type is set to: **phys**. Make a copy of the example config file and update it with the name of the Ethernet interface to be assigned, an appropriate IP address, and any other appropriate changes (e.g. mac address). For example, the change (in universal diff format) to set the interface `enp1s0` and IP address 192.168.10.3 would look like:

```
/usr/share/doc/lxc-common/examples/lxc-phys.conf
+++ lxc-phys.conf
@@ -3,7 +3,6 @@
 lxc.utsname = gamma
 lxc.network.type = phys
 lxc.network.flags = up
-lxc.network.link = eth0
-lxc.network.hwaddr = 4a:49:43:49:79:ff
-lxc.network.ipv4 = 10.2.3.6/24
-lxc.network.ipv6 = 2003:db8:1:0:214:1234:fe0b:3297
+lxc.network.link = enp1s0
```

```
+lxc.network.hwaddr = 00:e0:0c:00:93:05
+lxc.network.ipv4 = 192.168.10.3/24
```

A simple way to test the new config file and the network interface is to run /bin/bash as a command with lxc-execute, which will provide a shell running in the container:

```
# lxc-execute -n mytest -f lxc-phys.conf -- /bin/bash
bash-4.2#
```

In the container, use the fm1-gb4 interface normally:

```
bash-4.3# ifconfig
enp1s0    Link encap:Ethernet  HWaddr 00:e0:0c:00:93:05
          inet addr:192.168.10.3  Bcast:192.168.10.255  Mask:255.255.255.0
          UP BROADCAST MULTICAST  MTU:1500  Metric:1
          RX packets:0 errors:0 dropped:0 overruns:0 frame:0
          TX packets:6 errors:0 dropped:0 overruns:0 carrier:0
          collisions:0 txqueuelen:1000
          RX bytes:0 (0.0 B)  TX bytes:508 (508.0 B)
          Memory:fe5e8000-fe5e8fff

lo        Link encap:Local Loopback
          inet addr:127.0.0.1  Mask:255.0.0.0
          inet6 addr: ::1/128 Scope:Host
          UP LOOPBACK RUNNING  MTU:65536  Metric:1
          RX packets:0 errors:0 dropped:0 overruns:0 frame:0
          TX packets:0 errors:0 dropped:0 overruns:0 carrier:0
          collisions:0 txqueuelen:0
          RX bytes:0 (0.0 B)  TX bytes:0 (0.0 B)

bash-4.2# ping -c 3 192.168.10.1
PING 192.168.10.1 (192.168.10.1) 56(84) bytes of data.
64 bytes from 192.168.10.1: icmp_req=1 ttl=64 time=0.385 ms
64 bytes from 192.168.10.1: icmp_req=2 ttl=64 time=0.207 ms
64 bytes from 192.168.10.1: icmp_req=3 ttl=64 time=0.187 ms

--- 192.168.10.1 ping statistics ---
3 packets transmitted, 3 received, 0% packet loss, time 1998ms
rtt min/avg/max/mdev = 0.187/0.259/0.385/0.090 ms
```

10.2.3.4 LXC: How to configure networking with virtual Ethernet pairs (lxc-veth.conf)

One approach to providing a virtual network interface to a container is using the "Virtual ethernet pair device" feature of the Linux kernel in conjunction with a network bridge.

See the veth description in http://man7.org/linux/man-pages/man5/lxc.conf.5.html for additional details on this approach to networking.

With this approach LXC creates a new network namespace for the container.

The example configuration file lxc-veth.conf demonstrates this approach:

```
/usr/share/doc/lxc-common/examples/lxc-veth.conf
```

The contents of the default lxc-veth.conf example are show below:

```
# Container with network virtualized using a pre-configured bridge named br0 and
# veth pair virtual network devices
lxc.utsname = beta
```

```
lxc.network.type = veth
lxc.network.flags = up
lxc.network.link = br0
lxc.network.hwaddr = 4a:49:43:49:79:bf
lxc.network.ipv4 = 10.2.3.5/24
lxc.network.ipv6 = 2003:db8:1:0:214:1234:fe0b:3597
```

Note, the network type value is: **veth** and the link property value is **br0**.

First, create a network bridge which is attached to a physical network interface and assign the bridge an IP address. The bridge becomes one endpoint In the example below the bridge br0 is created, interface `enp1s0` is added to it, and the bridge is assigned an IP address of 192.168.20.2.

```
# brctl addbr br0
# ifconfig br0 192.168.20.2 up
# ifconfig enp1s0 up
# brctl addif br0 enp1s0
```

Make a copy of the example config file and update it with an appropriate IP address and any other appropriate changes (e.g. mac address). For example, the change (in universal diff format) to update the IP address to 192.168.20.3 would look like:

```
--- /usr/share/doc/lxc-common/examples/lxc-veth.conf
+++ lxc-veth.conf
@@ -5,5 +5,5 @@
 lxc.network.flags = up
 lxc.network.link = br0
 lxc.network.hwaddr = 4a:49:43:49:79:bf
-lxc.network.ipv4 = 10.2.3.5/24
+lxc.network.ipv4 = 192.168.20.3/24
 lxc.network.ipv6 = 2003:db8:1:0:214:1234:fe0b:3597
```

A simple way to test the new config file and the network interface is to run /bin/bash as a command with lxc-execute, which will provide a shell running in the container:

```
# lxc-execute -n mytest -f lxc-veth.conf -- /bin/bash
bash-4.2#
```

In the container, use the virtual network interface (eth0 in this example) normally:

```
bash-4.2# ifconfig
eth0      Link encap:Ethernet  HWaddr 4a:49:43:49:79:bf
          inet addr:192.168.20.3  Bcast:192.168.20.255  Mask:255.255.255.0
          inet6 addr: fe80::4849:43ff:fe49:79bf/64 Scope:Link
          inet6 addr: 2003:db8:1:0:214:1234:fe0b:3597/64 Scope:Global
          UP BROADCAST RUNNING MULTICAST  MTU:1500  Metric:1
          RX packets:6 errors:0 dropped:0 overruns:0 frame:0
          TX packets:7 errors:0 dropped:0 overruns:0 carrier:0
          collisions:0 txqueuelen:1000
          RX bytes:468 (468.0 B)  TX bytes:586 (586.0 B)

lo        Link encap:Local Loopback
          inet addr:127.0.0.1  Mask:255.0.0.0
          inet6 addr: ::1/128 Scope:Host
          UP LOOPBACK RUNNING  MTU:65536  Metric:1
          RX packets:0 errors:0 dropped:0 overruns:0 frame:0
          TX packets:0 errors:0 dropped:0 overruns:0 carrier:0
          collisions:0 txqueuelen:0
          RX bytes:0 (0.0 B)  TX bytes:0 (0.0 B)
```

```
bash-4.2# ping -c 3 192.168.20.1
PING 192.168.20.1 (192.168.20.1) 56(84) bytes of data.
64 bytes from 192.168.20.1: icmp_req=1 ttl=64 time=0.433 ms
64 bytes from 192.168.20.1: icmp_req=2 ttl=64 time=0.221 ms
64 bytes from 192.168.20.1: icmp_req=3 ttl=64 time=0.228 ms

--- 192.168.20.1 ping statistics ---
3 packets transmitted, 3 received, 0% packet loss, time 1998ms
rtt min/avg/max/mdev = 0.221/0.294/0.433/0.098 ms
```

10.2.3.5 LXC: How to configure networking with macvlan (lxc-macvlan.conf)

An LXC container can be provided with a virtual network interface using the "MAC-VLAN" feature of the Linux kernel (see kernel config option CONFIG_MACVLAN). MAC-VLAN allows virtual interfaces to be created that route packets to or from a MAC address to a physical network interface.

See the macvlan description in http://man7.org/linux/man-pages/man5/lxc.conf.5.html for some additional details on this approach to networking.

The example configuration file lxc-veth.conf demonstrates this approach:

```
/usr/share/doc/lxc-common/examples/lxc-macvlan.conf
```

The contents of the provided lxc-phys.conf example configuration file are show below:

```
# Container with network virtualized using the macvlan device driver
lxc.utsname = alpha
lxc.network.type = macvlan
lxc.network.flags = up
lxc.network.link = eth0
lxc.network.hwaddr = 4a:49:43:49:79:bd
lxc.network.ipv4 = 10.2.3.4/24
lxc.network.ipv6 = 2003:db8:1:0:214:1234:fe0b:3596
```

Make a copy of the example config file and update it with the physical network interface to be used, an appropriate IP address, and any other appropriate changes (e.g. mac address). For example, the change (in universal diff format) to specify the enp1s0 interface and update the IP address to 192.168.1.24 would look like:

```
--- /usr/share/doc/lxc-common/examples/lxc-macvlan.conf
+++ lxc-macvlan.conf
@@ -2,7 +2,7 @@
 lxc.utsname = alpha
 lxc.network.type = macvlan
 lxc.network.flags = up
-lxc.network.link = eth0
+lxc.network.link = enp1s0
 lxc.network.hwaddr = 4a:49:43:49:79:bd
-lxc.network.ipv4 = 10.2.3.4/24
+lxc.network.ipv4 = 192.168.10.3/24
 lxc.network.ipv6 = 2003:db8:1:0:214:1234:fe0b:3596
```

Put the network interface in promiscuous mode:

```
# ifconfig enp1s0 promisc
# ifconfig enp1s0
enp1s0    Link encap:Ethernet  HWaddr 00:e0:0c:00:93:05
          inet addr:192.168.10.2  Bcast:192.168.10.255  Mask:255.255.255.0
          inet6 addr: fe80::2e0:cff:fe00:9305/64 Scope:Link
```

```
          UP BROADCAST RUNNING PROMISC MULTICAST  MTU:1500  Metric:1
          RX packets:5 errors:0 dropped:0 overruns:0 frame:0
          TX packets:17 errors:0 dropped:0 overruns:0 carrier:0
          collisions:0 txqueuelen:1000
          RX bytes:344 (344.0 B)  TX bytes:1314 (1.2 KiB)
          Memory:fe5e0000-fe5e0fff
```

Test the MAC-VLAN interface by starting an application container running /bin/bash:

```
# lxc-execute -n mytest -f lxc-macvlan.conf -- /bin/bash
bash-4.2#
```

Note: the shell prompt above ("bash-4.2") is in the container.

Test the interface in the now running container:

```
bash-4.2# ifconfig
eth0      Link encap:Ethernet  HWaddr 4a:49:43:49:79:bd
          inet addr:192.168.10.3  Bcast:192.168.10.255  Mask:255.255.255.0
          inet6 addr: fe80::4849:43ff:fe49:79bd/64 Scope:Link
          inet6 addr: 2003:db8:1:0:214:1234:fe0b:3596/64 Scope:Global
          UP BROADCAST RUNNING MULTICAST  MTU:1500  Metric:1
          RX packets:0 errors:0 dropped:0 overruns:0 frame:0
          TX packets:7 errors:0 dropped:0 overruns:0 carrier:0
          collisions:0 txqueuelen:0
          RX bytes:0 (0.0 B)  TX bytes:586 (586.0 B)

lo        Link encap:Local Loopback
          inet addr:127.0.0.1  Mask:255.0.0.0
          inet6 addr: ::1/128 Scope:Host
          UP LOOPBACK RUNNING  MTU:65536  Metric:1
          RX packets:0 errors:0 dropped:0 overruns:0 frame:0
          TX packets:0 errors:0 dropped:0 overruns:0 carrier:0
          collisions:0 txqueuelen:0
          RX bytes:0 (0.0 B)  TX bytes:0 (0.0 B)

bash-4.2# ping -c 3 192.168.10.1
PING 192.168.10.1 (192.168.10.1) 56(84) bytes of data.
64 bytes from 192.168.10.1: icmp_req=1 ttl=64 time=0.380 ms
64 bytes from 192.168.10.1: icmp_req=2 ttl=64 time=0.204 ms
64 bytes from 192.168.10.1: icmp_req=3 ttl=64 time=0.201 ms

--- 192.168.10.1 ping statistics ---
3 packets transmitted, 3 received, 0% packet loss, time 1998ms
rtt min/avg/max/mdev = 0.201/0.261/0.380/0.085 ms
```

10.2.3.6 LXC: How to configure networking using a VLAN (lxc-vlan.conf)

A container can be provided with a virtual network interface using VLANs.

See the vlan description in http://man7.org/linux/man-pages/man5/lxc.conf.5.html for some additional details on this approach to networking.

The example configuration file lxc-veth.conf demonstrates this approach:

```
/usr/share/doc/lxc-common/examples/lxc-vlan.conf
```

The contents of the provided lxc-vlan.conf example configuration file are show below:

```
 # Container with network virtualized using the vlan device driver
lxc.utsname = alpha
lxc.network.type = vlan
lxc.network.vlan.id = 1234
lxc.network.flags = up
lxc.network.link = eth0
lxc.network.hwaddr = 4a:49:43:49:79:bd
lxc.network.ipv4 = 10.2.3.4/24
lxc.network.ipv6 = 2003:db8:1:0:214:1234:fe0b:3596
```

Make a copy of the example config file and update it with the physical network interface to be used and the vlan ID, an appropriate IP address, and any other appropriate changes. For example, the change (in universal diff format) to specify the enp1s0 interface, a VLAN id of 2, and an IP address of 192.168.30.2 would look like:

```
--- /usr/share/doc/lxc/examples/lxc-vlan.conf   2013-05-30 14:22:14.980406375 +0300
+++ lxc-vlan.conf       2013-06-03 13:26:38.477580000 +0300
@@ -1,9 +1,9 @@
 # Container with network virtualized using the vlan device driver
 lxc.utsname = alpha
 lxc.network.type = vlan
-lxc.network.vlan.id = 1234
+lxc.network.vlan.id = 2
 lxc.network.flags = up
-lxc.network.link = eth0
+lxc.network.link = enp1s0
 lxc.network.hwaddr = 4a:49:43:49:79:bd
-lxc.network.ipv4 = 10.2.3.4/24
+lxc.network.ipv4 = 192.168.30.2/24
 lxc.network.ipv6 = 2003:db8:1:0:214:1234:fe0b:3596
```

In this setup, the host is connected to a test machine through physical interface enp1s0. On the test machine, the following commands have been issued (interface p7p1 on this machine has physical link to enp1s0):

```
[root@everest][~]# modprobe 8021q
[root@everest][~]# lsmod | grep 8021q
8021q                  23476  0
garp                   13763  1 8021q
[root@everest][~]# vconfig add p7p1 2
Added VLAN with VID == 2 to IF -:p7p1:-
[root@everest][~]# ifconfig p7p1.2 192.168.30.1 up
```

Test the VLAN interface by starting an application container running /bin/bash:

```
# lxc-execute -n mytest -f lxc-vlan.conf -- /bin/bash
bash-4.2#
```

Test the interface in the now running container:

```
bash-4.2# ifconfig
eth0: flags=4163<UP,BROADCAST,RUNNING,MULTICAST>  mtu 1500
        inet 192.168.30.2  netmask 255.255.255.0  broadcast 192.168.30.255
        inet6 fe80::21e:c9ff:fe49:bb93  prefixlen 64  scopeid 0x20<link>
        ether 00:1e:c9:49:bb:93  txqueuelen 0  (Ethernet)
        RX packets 0  bytes 0 (0.0 B)
        RX errors 0  dropped 0  overruns 0  frame 0
        TX packets 6  bytes 468 (468.0 B)
```

```
        TX errors 0  dropped 0 overruns 0  carrier 0  collisions 0

lo: flags=73<UP,LOOPBACK,RUNNING>  mtu 16436
        inet 127.0.0.1  netmask 255.0.0.0
        inet6 ::1  prefixlen 128  scopeid 0x10<host>
        loop  txqueuelen 0  (Local Loopback)
        RX packets 4  bytes 200 (200.0 B)
        RX errors 0  dropped 0  overruns 0  frame 0
        TX packets 4  bytes 200 (200.0 B)
        TX errors 0  dropped 0 overruns 0  carrier 0  collisions 0

bash-4.2# ping -c 3 192.168.30.1
PING 192.168.30.1 (192.168.30.1) 56(84) bytes of data.
64 bytes from 192.168.30.1: icmp_req=1 ttl=64 time=0.338 ms
64 bytes from 192.168.30.1: icmp_req=2 ttl=64 time=0.372 ms
64 bytes from 192.168.30.1: icmp_req=3 ttl=64 time=0.355 ms

--- 192.168.30.1 ping statistics ---
3 packets transmitted, 3 received, 0% packet loss, time 2000ms
rtt min/avg/max/mdev = 0.338/0.355/0.372/0.013 ms
```

10.2.3.7 LXC: How to monitor containers

Containers transition through a set of well defined states. After a container is created it is in the "stopped" state.

A number of commands are available in LXC to monitor the state of a container. The following examples provide an introduction and demonstrate the capabilities of these commands.

1. lxc-info

   The lxc-info command shows the current state of the container.

In the example below, a container called "foo" has already been created but not started and the container is stopped:

```
# lxc-info -n foo
Name:           foo
State:          STOPPED
After the container is started lxc-info shows the container in the running state:
```

```
# lxc-start -n foo
# lxc-info -n foo
Name:           foo
State:          RUNNING
PID:            5075
CPU use:        0.01 seconds
Memory use:     508.00 KiB
KMem use:       0 bytes
```

2. lxc-monitor

   The **lxc-monitor** command can monitor the state of one or more containers, the command continues to run until it is killed.

   In this example **lxc-monitor** monitors the state of a container named "foo":

```
# lxc-monitor -n foo
```

   In a separate shell, start and then stop the container foo:

```
# lxc-start -n foo
# lxc-stop -n foo
```

   The running **lxc-monitor** command displays the state changes as they occur:

```
'foo' changed state to [STARTING]
'foo' changed state to [RUNNING]
'foo' changed state to [STOPPING]
'foo' changed state to [STOPPED]
```

3. lxc-wait

   The lxc-wait command will wait for a container state change and then exit. This can be useful for scripting and synchonizing the start or exit of a container.

   For example, to wait until the container named "foo" stops:

```
# lxc-wait -n foo -s STOPPED
```

10.2.3.8 LXC: How to modify the capabilities of a container to provide additional isolation

As described in POSIX Capabilities ,by default processes running in a container will have all capabilities. And the configuration for a container can further restrict these capabilities.

This example shows how to remove the ability for a container to issue the mknod command.

By default a container can issue the mknod command:

```
~ # mknod zero c 1 5
~ # ls -l zero
crw-r--r--    1 root     root        1,   5 Jun  3 17:08 zero
```

In this example we modify the config file of a container named "foo" (/var/lib/lxc/foo/config) and specify in the **lxc.cap.drop** property that the mknod capability (CAP_MKNOD) should be removed:

```
@@ -5,6 +5,7 @@
 lxc.utsname = foo
 lxc.tty = 1
 lxc.pts = 1
+lxc.cap.drop = mknod
 lxc.rootfs = /var/lib/lxc/foo/rootfs
 lxc.mount.entry=/lib /var/lib/lxc/foo/rootfs/lib none ro,bind 0 0
 lxc.mount.entry=/usr/lib /var/lib/lxc/foo/rootfs/usr/lib none ro,bind 0 0
```

Now restart the container and the mknod operation is no longer permitted:

```
~ # mknod zero c 1 5
mknod: zero: Operation not permitted
```

10.2.3.9 LXC: How to use cgroups to manage and control a containers resources

This example demonstrates how to use control croups to control which CPU's a container is scheduled on and the percentage of CPU time allocated to a container.

In this example we'll examine and change:

- the **cpuset** subsystem's **cpus** parameter which controls which physical CPUs the container's processes will run on
- the **cpu** subsystem's **shares** parameter which controls the percentage of the CPU to be allocated to the container

1. Start two application containers each running /bin/bash:

   First container:

   ```
   # lxc-execute -n foo1 -f lxc-no-netns.conf -- /bin/bash
   bash-4.2#
   ```

   Second container:

   ```
   # lxc-execute -n foo2 -f lxc-no-netns.conf -- /bin/bash
   bash-4.2#
   ```

2. In both containers start a process that will put a 100% load on the CPUs:

   ```
   (while true; do true; done) &
   ```

3. The **cpuset.cpus** subsystem/value specifies which physical CPUs the container's processes run on. From a host shell, examine this with the **lxc-cgroup** command:

   ```
   # lxc-cgroup -n foo1 cpuset.cpus
   0-7
   ```

   In this example the host system has 4 CPUs.

   This can also be seen directly through the /cgroup filesystem:

   ```
   # cat /sys/fs/cgroup/cpuset/lxc/foo1/cpuset.cpus
   0-7
   ```

4. Change both containers to run only on CPU 2:

```
# lxc-cgroup -n foo1 cpuset.cpus 2
# lxc-cgroup -n foo2 cpuset.cpus 2
#
```

   The top command now shows CPU 2 with 100% utilization. The bash commands running in each container, each have about 50% of the CPU:

```
top - 17:14:41 up 10 min,  4 users,  load average: 1.64, 0.61, 0.23
Tasks: 100 total,   3 running,  97 sleeping,   0 stopped,   0 zombie
Cpu0  :  0.0%us,  0.3%sy,  0.0%ni, 99.7%id,  0.0%wa,  0.0%hi,  0.0%si,  0.0%st
Cpu1  :  0.0%us,  0.0%sy,  0.0%ni,100.0%id,  0.0%wa,  0.0%hi,  0.0%si,  0.0%st
Cpu2 :100.0%us, 0.0%sy, 0.0%ni, 0.0%id, 0.0%wa, 0.0%hi, 0.0%si, 0.0%st
Cpu3  :  0.0%us,  0.0%sy,  0.0%ni,100.0%id,  0.0%wa,  0.0%hi,  0.0%si,  0.0%st
Cpu4  :  0.0%us,  0.0%sy,  0.0%ni,100.0%id,  0.0%wa,  0.0%hi,  0.0%si,  0.0%st
Cpu5  :  0.0%us,  0.0%sy,  0.0%ni,100.0%id,  0.0%wa,  0.0%hi,  0.0%si,  0.0%st
Cpu6  :  0.0%us,  0.0%sy,  0.0%ni,100.0%id,  0.0%wa,  0.0%hi,  0.0%si,  0.0%st
Cpu7  :  0.0%us,  0.0%sy,  0.0%ni,100.0%id,  0.0%wa,  0.0%hi,  0.0%si,  0.0%st
Mem:   3996400k total,   189836k used,  3806564k free,     1652k buffers
Swap:        0k total,        0k used,        0k free,    26180k cached

  PID USER      PR  NI  VIRT  RES  SHR S %CPU %MEM    TIME+  COMMAND
 2875 root      20   0  3624  416  164 R   50  0.0   1:28.12 bash
 2874 root      20   0  3624  424  168 R   50  0.0   1:31.06 bash
```

5. The cpu.shares subsystem/value specifies the percentage of the CPU allocated to the cgroup/container. By default each container has a shares value of 1024:

```
# lxc-cgroup -n foo1 cpu.shares
1024
# lxc-cgroup -n foo2 cpu.shares
1024
```

6. Change container "foo2" to have about 10% of the CPU:

```
# lxc-cgroup -n foo2 cpu.shares 100
# lxc-cgroup -n foo1 cpu.shares 900
```

   Now the top command output reflects the new CPU allocation:

```
  PID USER      PR  NI  VIRT  RES  SHR S %CPU %MEM    TIME+  COMMAND
 2874 root      20   0  3624  424  168 R   90  0.0   2:53.63 bash
 2875 root      20   0  3624  416  164 R   10  0.0   2:11.36 bash
```

7. Stop the containers

```
# lxc-stop -n foo1 -k
# lxc-stop -n foo2 -k
#
```

10.2.3.10 LXC: How to run an application in a container with lxc-execute

The **lxc-execute** command allows a single application to be run in a container (as contrasted with a system container which boots an instance of Linux user space starting with System V style init).

In the example below an instance of a QEMU/KVM virtual machine is started in a container called foo.

Note, it is not required to explicitly create (and destroy) a container when running application containers with lxc-execute. The containers will automatically created and destroyed.

1. Start QEMU in the container with lxc-execute:

```
# lxc-execute -n foo -f lxc-no-netns.conf -- qemu-system-ppc -enable-kvm -smp 2 -m 256M -nographic
-M ppce500 -kernel uImage -initrd rootfs.ext2.gz -append "root=/dev/ram rw console=ttyS0,115200" -
serial tcp::4445,server,telnet
```

NOTE: For 64bit platforms, please replace qemu-system-ppc with qemu-system-ppc64.

Some notes:

- The QEMU command line follows the double dash ("--") specfied on the lxc-execute command line and distinguishes argument to lxc-execute from arguments to qemu-system-ppc.
- Using the specified configuration file, QEMU will run in the network namespace of the host system, meaning the TCP ports for serial and the monitor (ports 4445 and 4446) can be accessed from the host. However, lxc-execute will accept a configuration file as an argument allowing customization of the degree of isolation of the container.
- In this example there are 2 virtual cpus specified, which results in a total of 3 QEMU processes/threads. So we expect to see 3 QEMU processes in the container.

2. Examine the state of the container with lxc-ls and lxc-info:

```
# lxc-ls --active
foo

# lxc-info -n foo
Name:           foo
State:          RUNNING
PID:            3205
IP:             192.168.2.80
CPU use:        3.96 seconds
Memory use:     140.46 MiB
KMem use:       0 bytes
```

3. In the QEMU console look at the CPU status which shows the process IDs for the two virtual CPUs in in the virtual machine:

```
# (qemu) info cpus
* CPU #0: nip=0x00000000c001450c thread_id=4
  CPU #1: nip=0x00000000c001450c thread_id=5
(qemu)
```

Note that the process/thread IDs as viewed from within the container (thread IDs 4 and 5) are different than from the host, since they are in a different namespace.

5. Using the container's cgroup restrict the physical CPUs on which the virtual machine is allowed to run.

By default all 4 CPUs can be used by the container :

```
# by default all 4 CPUs can be used by the container
# cat /cgroup/lxc/foo/cpuset.cpus
0-3
```

Restrict the containers processes to CPUs 2 and 3:

```
# echo 2-3 > /cgroup/lxc/foo/cpuset.cpus
# cat /cgroup/lxc/foo/cpuset.cpus
2-3
```

10.2.3.11 LXC: How to run an unprivileged container

With the addition of the user namespace in the Linux kernel, a normal user on a Linux host can create and run container instances. This feature has been integrated in the LXC package, starting from version 1.0.

The steps below detail the necessary steps required in order to configure and manage an unprivileged container.

NOTE: Before running these steps, make sure that the host is properly configured for container use, by running **lxc-checkconfig** (cgroups, namespaces, etc.).

1. Create the **/etc/subuid** and **/etc/subgid** file on the Linux host. These will be used to store the unprivileged user's subordinate UIDs and GIDs. The unprivileged user has the ability to manage users on his own in his user namespace, and their IDs will be mapped to corresponding ranges on IDs on the host system. The subordinate IDs will correspond to the ranges defined in these files.

   ```
   for file in '/etc/subuid' '/etc/subgid'; do
       touch $file
       chown root:root $file
       chmod 644 $file
   done
   ```

2. Add a user in the system - **lxc-user**.

   ```
   useradd lxc-user -p $(echo test | openssl passwd -1 -stdin)
   ```

3. Check the contents of **/etc/subuid** and **/etc/subgid**. If they contain the following entries, the user has been automatically assigned a default set of subordinate IDs.

   ```
   root@t4240qds:~# cat /etc/sub*
   lxc-user:100000:65536
   lxc-user:100000:65536
   root@t4240qds:~#
   ```

   If the files are empty, you need to manually assign a set of subordinate IDs to the user.

   ```
   usermod --add-subuids 100000-165536 lxc-user
   usermod --add-subgids 100000-165536 lxc-user
   ```

4. The container will have a virtual interface linked to a bridge on the host. Use the following command to create the bridge.

   ```
   brctl addbr br0 && ifconfig br0 10.0.0.1
   ```

5. You must create and edit the **/etc/lxc/lxc-usernet** file. This file specifies how many interfaces the lxc-user will be allowed to have linked in this bridge.

   ```
   echo "lxc-user veth br0 10" > /etc/lxc/lxc-usernet
   ```

6. Create the **/home/lxc-user/.config/lxc** directory on the host. This will hold the default configuration for unprivileged containers belonging to the lxc-user.

   ```
   mkdir -p /home/lxc-user/.config/lxc
   ```

7. **Create** the default container configuration file, **/home/lxc-user/.config/lxc/default.conf**, and paste the following lines.

   ```
   lxc.network.type = veth
   lxc.network.link = br0
   lxc.network.flags = up
   lxc.id_map = u 0 100000 65536
   lxc.id_map = g 0 100000 65536
   ```

8. Change the ownership of the newly created files and folders to lxc-user.

```
chown -R lxc-user:lxc-user /home/lxc-user/.config
```

9. For each of the mounted cgroup controllers, created a directory in the top called **lxc-user**, and change its ownership to lxc-user. Be sure to enable the cgroup.clone_children and memory.use_hierarchy flags.

```
echo 1 > /sys/fs/cgroup/memory/memory.use_hierarchy

for c in `ls /sys/fs/cgroup/`; do
    echo 1 > /sys/fs/cgroup/$c/cgroup.clone_children
    mkdir /sys/fs/cgroup/$c/lxc-user
    chown -R lxc-user:lxc-user /sys/fs/cgroup/$c/lxc-user
done
```

10. **Login as the new user in a new console.**

```
t4240qds login: lxc-user
Password:
t4240qds:~$
```

11. Copy the shell PID in the lxc-user cgroups.

```
for c in `ls /sys/fs/cgroup/`; do
    echo $$ > /sys/fs/cgroup/$c/lxc-user/tasks
done
```

12. From the same shell as before, create a Busybox container. You can pass it a custom config file using the **-f** cmdline parameter. Otherwise, it will pick the default config from **/home/lxc-user/.config/default.conf**.

```
t4240qds:~$ lxc-create -n foo -t busybox
setting root password to "root"
Password for 'root' changed
t4240qds:~$
```

13. Start the container.

```
t4240qds:~$ lxc-start -n foo -F

Please press Enter to activate this console.
/ #
/ #
/ # whoami
root
/ #
```

Now you can interact with the container as you would with one created by root. **Make sure that all container commands are run as lxc-user.**

10.2.3.12 LXC: How to run containers with Seccomp protection

A large number of system calls are exposed to every userland process with many of them going unused for the entire lifetime of the process. As system calls change and mature, bugs are found and eradicated. A certain subset of userland applications benefit by having a reduced set of available system calls. The resulting set reduces the total kernel surface exposed to the application. System call filtering is meant for use with those applications.

Seccomp (short for *secure compute*) is a system call filtering mechanism present in the kernel. Initially it has been thought to be a sandboxing mechanism that would allow userspace processes to issue a very limited set of system calls - read(), write(), exit()

and sigreturn(). This has been further known to be **seccomp mode 1**, and while it is strong on the security side, it doesn't leave much room for flexibility.

The next addition to seccomp was to allow filtering (or **seccomp mode 2**) based on the kernel BPF (Berkeley Packet Filter) infrastructure. This allows the system administrator to define complex and granular policies, per system call and its arguments. This is an extension to the BPF mechanism, that allows filtering to apply to system call numbers and their arguments, besides its original purpose (socket packets). The defined filter results in a seccomp policy which is attached to the userspace process in the form of a BPF program. Each time the process issues a system call, it is checked against this policy in order to determine how it will be handled:

- **SECCOMP_RET_KILL** - the task exits immediately without executing the system call.
- **SECCOMP_RET_TRAP** - the kernel sends a SIGSYS to the triggering task without executing the system call.
- **SECCOMP_RET_ERRNO** - a custom errno is returned to userspace without executing the system call.
- **SECCOMP_RET_TRACE** - causes the kernel to attempt to notify a ptrace-based tracer prior to executing the system call. The tracer can skip the system call or change it to a valid syscall number.
- **SECCOMP_RET_ALLOW** - results in the system call being executed.

In order to make the secure computing facility more userspace-friendly, the libseccomp library has been developed, which is meant to make it easier for applications to take advantage of the packet-filter-based seccomp mode. Prior to this, userspace applications had to define the BPF filter themselves. libseccomp restructures this approach into a simple and straightforward API which userspace applications can use. The latest version of libseccomp adds support for Python bindings as well, and is designed to work on multiple architectures (Arm, MIPS). PowerPC support has also been merged on a separate branch, and is expected to be included in future releases.

Using seccomp with LXC containers

Refer toLinux Containers (LXC) for NXP QorIQ User's Guide for information on how to build LXC with seccomp support in the SDK.

Note: Currently LXC seccomp support is not available for Arm64 architectures.

Seccomp filtering integrates well with processes sandboxed as containers, as they can be assigned to untrusted users and exposed with a limited set of allowed system calls. This is a portable and granular low-level security mechanism which can be used to increase container security. The seccomp policy file needs to be applied only to the init process in the container, and will be inherited by all its children.

The seccomp policy for the container is specified using the container configuration file, in the form of a single line containing:

```
lxc.seccomp = /var/lib/lxc/lxc_seccomp.conf
```

An example lxc_seccomp policy file can look as follows:

```
2
blacklist
[ppc64]
mknod errno 120
sched_setscheduler trap
fchmodat kill
[ppc]
mknod
```

The elements in the policy file represent the following:

1. Version number (1/2) - a single integer containing a single number, 1 or 2. Version 1 only allows to define a set of system calls which are allowed (whitelisted) in the container, specified by syscall number. This version is limited in configurability and portability, since it's only used to specify allowed syscall numbers, which may differ from arch to arch. Version 2 allows

the policies to be either a whitelist (default deny, except mentioned syscalls) or a blacklist (default allow, except mentioned syscalls), and the syscalls can be expressed by name.

2. Policy type (whitelist/blacklist) - with an option of a default policy action (errno #, trap, kill, allow). The policy type is per seccomp context, and can be either whitelist or blacklist, not both.
3. Architecture tag [optional] - mentions that the following set of system calls will only be applied to a specific architecture. There can be multiple architecture tags and associated syscalls. These tags allow the same seccomp policy file to be used on multiple platforms, treating each one differently with respect to the set of system calls.
4. System calls - which can be expressed by number (in version 1) or name (in version 2). Optionally, an action can be expressed after the system call (errno #, trap, kill, allow), specifying the desired seccomp behavior. If this is omitted, the dafault rule action of the policy will be applied (allow for whitelist policies, kill for blacklist policies).

When running a container with the previous policy file on a PowerPC 64-bit platform, the mknod, sched_setscheduler (chrt) and fchmodat (chmod) system calls will be denied, with mentioned behaviors: mknod will return errno 120 without executing, chrt will trap and chmod will result in the process executing it being killed. On PowerPC platforms, only mknod will be denied, resulting in the process being killed. All other system calls will be allowed.

Notes:

- Containers can still be started without loading a seccomp policy file, simply by omitting the lxc.seccomp line in the config file. No seccomp policy is loaded by default.
- If a container process has a seccomp policy loaded, this can be seen in /proc/PID/status, on the seccomp line. This line will contain "Seccomp: 2" when using seccomp filter (mode 2). "Seccomp: 0" means there is no seccomp policy in effect.
- Seccomp policies of a process are automatically inherited by its children.
- Currently LXC supports only system call based filtering, with no support for system call arguments.
- The performance degradation of the processes running with a seccomp policy applied is directly proportional with the policy file size: normally, the system calls are listed as rules in the BPF filter program, and they all need to be parsed and matched at each system call. The longer the list, the more time this will take.
- The LXC package comes shipped with a set of example policy files which can be found at /share/doc/lxc/examples/seccomp-*. There's also a policy file, common.seccomp, which denies common security syscall threats in the container, such as kernel module manipulation, kexec and open_by_handle_at (the vector for the Shocker exploit).

10.2.4 Libvirt

This document is a guide and tutorial to using libvirt on NXP SoCs. Libvirt is an open source toolkit that enables the management of Linux-based virtualization technologies such as KVM/QEMU virtual machines and Linux containers. The goal of the libvirt project (see https://libvirt.org) is to provide a stable, standard, hypervisor-agnostic interface for managing *virtualization domains* such as virtual machines and containers. Domains can be remote and libvirt provides full security for managing remote domains over a network. Libvirt is a layer intended to be used as a building block for higher level management tools and applications.

Libvirt provides:

- An interface to remotely manage the lifecycle of virtualization domains – provisioning, start/stop, monitoring
- Support for a variety of hypervisors – KVM/QEMU and Linux Containers are supported in the NXP SDK
- libvirtd – a Linux daemon that runs on a target node/system and allows a libvirt management tool to manage virtualization domains on the node
- virsh – a basic command shell for managing libvirt domains
- A standard XML format for defining domains

Libvirt Domain Lifecycle

Two types of libvirt domains are supported – KVM/QEMU virtual machines and Linux containers. The following state diagram illustrates the lifecycle of a domain, the states that domains can be in and the virsh commands that move the domain between states.

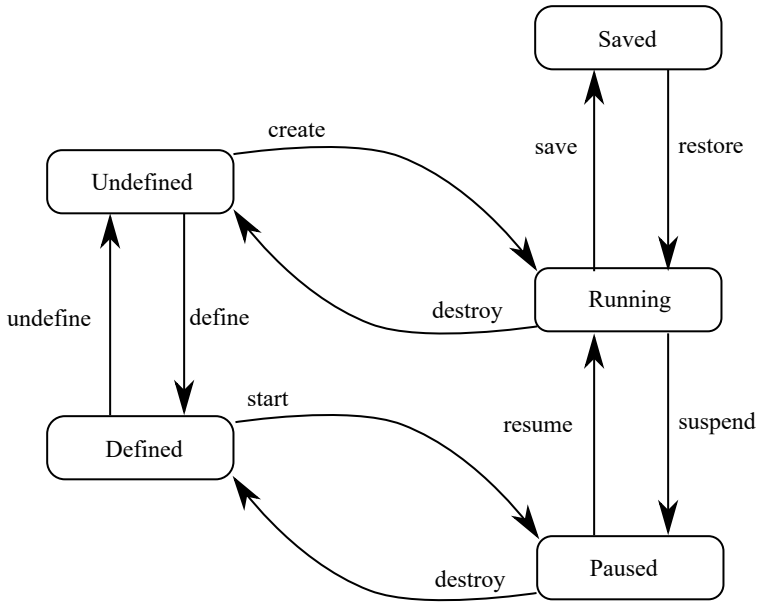

Domain States

- **Undefined**. There are two types of domains – persistent and transient domains. All domains begin in the *undefined* state where they are defined in XML definition file, and libvirt is unaware of them.
- **Defined**. Persistent domains begin with being *defined*. This adds the domain to libvirt, but it is not running. This state can also be conceptually thought of as *stopped*. The output of virsh list –all shows the domain as being *shut off*.
- **Running**. The *running* state is the normal state of an active domain after it has been started. The start command is used to move persistent domains into this state. Transient domains go from being undefined to *running* through the create command.
- **Paused**. The domain execution has been suspended. The domain is unaware of being in this state.
- **Saved**. The domain state has been saved and could be restored again.

Libvirt URIs

Because libvirt supports managing multiple types of virtualization domains (possibly remote) it uses uniform resource identifiers (URIs) to describes the target *node* to manage and the type of domain being managed.

An URI is specified when tools such as *virsh* makes a connection to a target node running libvirtd. Two types of URIs are supported – QEMU/KVM and LXC.

QEMU/KVM URIs are in the form:

- for a local node: *qemu:///system*
- for a remote node: *qemu[+transport]://[hostname]/system*

Linux containers URIs:

- for a local node: *lxc:///*

- for a remote node: *lxc[+transport]://[hostname]/*

A default URI can be specified using the environment variable *LIBVIRT_DEFAULT_URI* or in the */etc/libvirt/libvirtd.conf* config file.

For further information on URIs:

- https://libvirt.org/uri.html
- https://libvirt.org/remote.html#Remote_URI_reference

Virsh

The virsh command is a command line tool provided with the libvirt package for managing libvirt domains. It can be used to create, start, pause, shutdown domains. The general command format is:

```
virsh [OPTION]... <command> <domain> [ARG]...
```

Libvirt XML

The libvirt XML format is defined at http://libvirt.org/format.html.

Running libvirtd

The libvirtd daemon is installed as part of a libvirt packages installation. By default the target system init scripts should start libvirtd. Running libvirtd on the target system is a pre-requisite to running any management tools such as virsh. The libvirtd daemon can be manually started like this:

```
$ systemctl start libvirtd
```

In some circumstances the daemon may need to be restarted, such as after mounting cgroups or hugetlbfs. Daemon restart can be done like this:

```
$ systemctl restart libvirtd
```

The libvirtd daemon can be configured in */etc/libvirt/libvirtd.conf*. The file is self-documented and has detailed comments on the configuration options available.

The libvirt daemon logs data to */var/log/libvirt/*:

- General libvirtd log messages are in: */var/log/libvirt/libvirtd.log*
- QEMU/KVM domain logs are in: */var/log/libvirt/qemu/[domain-name].log*
- LXC domains logs are in: */var/log/libvirt/lxc/[domain-name].log*

The verbosity of logging can be controlled in */etc/libvirt/libvirtd.conf*.

In order to be able to start virtual machines the user used to manage virtual machines need to be added to the `libvirt` group:

```
sudo adduser <USER> libvirt
```

Examples

Libvirt KVM/QEMU Examples

Virtio Block scenario

1. We begin with a simple QEMU command line in a text file named kvm_virtio_blk.args:

```
$ echo "/usr/bin/qemu-system-aarch64 -name kvm_virtio_blk -smp 2 -enable-kvm -m 1024 -nographic
-cpu host -machine type=virt -kernel /boot/Image -serial pty -drive if=virtio,index=0,file=/root/
```

```
ubuntu_bionic_arm64_rootfs.ext4.img,id=foo,format=raw -append 'root=/dev/vda rw console=ttyAMA0
rootwait earlyprintk'" > kvm_virtio_blk.args
```

Note: The serial console is a tty, not a telnet server. The *-name* option is required and specifies the name of the virtual machine.

2. Before defining the domain, the QEMU command line must be converted to libvirt XML format:

```
$ virsh domxml-from-native qemu-argv kvm_virtio_blk.args > kvm_virtio_blk.xml
```

3. Now the domain can be defined:

```
$ virsh define kvm_virtio_blk.xml
Domain kvm_virtio_blk defined from kvm_virtio_blk.xml

$ virsh list --all
 Id    Name                           State
 ----------------------------------------------------
  - kvm_virtio_blk                shut off
```

4. Start the domain. This starts the VM and boots the Linux Guest from the *ubuntu_bionic_arm64_rootfs.ext4.img* image.

```
$ virsh start kvm_virtio_blk
Domain kvm_virtio_blk started

$ virsh list
 Id    Name                           State
 ----------------------------------------------------
  16    kvm_virtio_blk                 running
```

5. The *virsh console* command can be used to connect to the console of the running Linux domain.

```
$ virsh console kvm_virtio_blk
Connected to domain kvm_virtio_blk
Escape character is ^]

Ubuntu 16.04.3 LTS localhost ttyAMA0

localhost login: root
Password:
Welcome to Ubuntu 16.04.3 LTS (GNU/Linux 4.9.62 aarch64)

 *Documentation:  https://help.ubuntu.com
 *Management:     https://landscape.canonical.com
 *Support:        https://ubuntu.com/advantage
```

6. To stop the domain use the *destroy* command:

```
$ virsh destroy kvm_virtio_blk
Domain kvm_virtio_blk destroyed

$ virsh list --all
  Id    Name                           State
  ----------------------------------------------------
   - kvm_virtio_blk                shut off
```

7. To remove the domain from libvirt, use the *undefine* command:

```
$ virsh undefine kvm_virtio_blk
Domain kvm_virtio_blk has been undefined

$ virsh list --all
 Id    Name                           State
 ----------------------------------------------------
```

Note: One can find the full XML for this configuration in *Annex 1*.

Virtio Net scenario

This example uses a *virtio* model NIC card and a tap network backend. The virtual network interface is bridged via a TAP interface to the physical network.

Perform the following steps:

1. Enable virtio networking in the host and guest Linux kernels.
2. On the host, create a bridge to the physical network interface to be used by the virtual network interface in the virtual machine using the *brctl* command. In this example the physical interface being used is enp1s0:

```
$ brctl addbr br0
$ ifconfig br0 192.168.1.10 netmask 255.255.248.0
$ ifconfig enp1s0 0.0.0.0
$ brctl addif br0 enp1s0
```

3. Create a *qemu-ifup* script on the host Linux system:

```
#!/bin/sh

#TAP interface will be passed in $1
bridge=br0
guest_device=$1
ifconfig $guest_device 0.0.0.0 up
brctl addif $bridge $guest_device
```

4. Create a *args* file and convert it to the libvirt xml:

```
$ echo "/usr/bin/qemu-system-aarch64 -name kvm_virtio_net -smp 2 -enable-kvm -m 1024 -nographic
-cpu host -machine type=virt -kernel /boot/Image -serial pty -drive if=virtio,index=0,file=/
root/ubuntu_bionic_arm64_rootfs.ext4.img,id=foo,format=raw -netdev tap,id=tap0,script=/root/qemu-
ifup,downscript=no,ifname=tap0 -device virtio-net-pci,netdev=tap0 -append 'root=/dev/vda rw
console=ttyAMA0 rootwait earlyprintk'" > kvm_virtio_net.args

$ virsh domxml-from-native qemu-argv kvm_virtio_net.args > kvm_virtio_net.xml
```

5. Define and start the domain. Check if the virtual network interface is created.

```
$ virsh define kvm_virtio_net.xml
Domain kvm_virtio_net defined from kvm_virtio_net.xml

$ virsh start kvm_virtio_net
Domain kvm_virtio_net started

$ virsh console kvm_virtio_net
Connected to domain kvm_virtio_net
Escape character is ^]
```

```
Ubuntu 16.04.3 LTS localhost ttyAMA0

localhost login: root
Password:

$  dmesg | grep virtio_net
[    4.121280] virtio_net virtio1 enp0s2: renamed from eth0

$  ip a
1: lo: <LOOPBACK,UP,LOWER_UP> mtu 65536 qdisc noqueue state UNKNOWN group default qlen 1
    link/loopback 00:00:00:00:00:00 brd 00:00:00:00:00:00
    inet 127.0.0.1/8 scope host lo
       valid_lft forever preferred_lft forever
    inet6 ::1/128 scope host
       valid_lft forever preferred_lft forever
2: enp0s2: <BROADCAST,MULTICAST> mtu 1500 qdisc noop state DOWN group default qlen 1000
    link/ether 52:54:00:12:34:56 brd ff:ff:ff:ff:ff:ff
3: sit0@NONE: <NOARP> mtu 1480 qdisc noop state DOWN group default qlen 1
    link/sit 0.0.0.0 brd 0.0.0.0
4: docker0: <BROADCAST,MULTICAST> mtu 1500 qdisc noop state DOWN group default
    link/ether 02:42:81:50:d5:f5 brd ff:ff:ff:ff:ff:ff
    inet 172.17.0.1/16 scope global docker0
       valid_lft forever preferred_lft forever
```

The libvirt XML generated and used in this scenario differs from the previous one by the following lines:

```
<qemu:commandline>
  <qemu:arg value='-netdev'/>
  <qemu:arg value='tap,id=tap0,script=/root/qemu-ifup,downscript=no,ifname=tap0'/>
  <qemu:arg value='-device'/>
  <qemu:arg value='virtio-net-pci,netdev=tap0'/>
</qemu:commandline>
```

Note: Currently libvirt has no support for PCI transport, but it can be used using passthrough QEMU command line arguments (as seen in the previous xml).

Note: If you get the following error when starting the domain please use the steps from this thread to fix it.

```
could not open /dev/net/tun: Operation not permitted
```

Note: One can find the full XML for this configuration in *Annex 2*.

Virtio Block Dataplane

Virtio-blk-dataplane was developed for high performance disk I/O, especially for high IOPS devices. QEMU performs the disk I/O in a dedicated thread that is optimized for I/O performance.

Even though the scenario can use also a block device on the Linux host, the next steps will show how to implement this using a raw disk file.

Note: A direct translation between the qemu args are not possible using virsh that is why in this example we will start from the XML used in the previous scenario and build on it.

1. Create the raw disk file:

   ```
   $ dd if=/dev/zero of=/root/fake-dev0-backstore.img bs=1M count=300
   ```

2. Copy the libvirt XML file from the previous example:

   ```
   $ cp kvm_virtio_net.xml kvm_virtio_blk_dataplane.xml
   ```

3. Change the *name* and *uuid* of the new domain. Define the number of *IOThreads* to be assigned to the domain and used by the new storage device. Add the storage disk and assign it to the *iothread='1'*.

```
$ diff kvm_virtio_blk_dataplane.xml kvm_virtio_net.xml
```

```
2,3c2,3
<   <name>kvm_virtio_blk_dataplane</name>
<   <uuid>5c30747a-a2c9-485e-b814-2a503fef8657</uuid>
---
>   <name>kvm_virtio_net</name>
>   <uuid>5c30747a-a2c9-485e-b814-2a503fef8653</uuid>
22d21
<   <iothreads>1</iothreads>
29,34d27
<     </disk>
<     <disk type='file' device='disk'>
<       <driver name='qemu' type='raw' cache='none' io='native' iothread='1'/>
<       <source file='/root/fake-dev0-backstore.img'/>
<       <address type='pci' domain='0x0000' bus='0x00' slot='0x06' function='0x0'/>
<       <target dev='vdb' bus='virtio'/>
```

4. Start the new domain and check if virtio-blk-dataplane works properly.

```
$ virsh define kvm_virtio_blk_dataplane.xml
Domain kvm_virtio_blk_dataplane defined from kvm_virtio_blk_dataplane.xml

$ virsh start kvm_virtio_blk_dataplane
Domain kvm_virtio_blk_dataplane started

# After the guest boots, the virtual disk is visible as a block device with the name vdb.
$ virsh console kvm_virtio_blk_dataplane

   root@localhost:~# ls -la /dev/vd*
   brw-rw---- 1 root disk 254,  0 Aug 23 12:00 /dev/vda
   brw-rw---- 1 root disk 254, 16 Aug 23 12:00 /dev/vdb

# We can also check if the IOThread is correctly assigned to the domain.
$ virsh iothreadinfo kvm_virtio_blk_dataplane
 IOThread ID     CPU Affinity
 ------------------------------------------------
  1               0-7
```

Note: One can find the full XML for this configuration in *Annex 3*.

Libvirt KVM/QEMU FAQ

1. What if I get "error: XML error: No PCI buses available" error when trying to convert QEMU arguments tu XML?

   If you are using a 32 bit QEMU and you are trying a command like:

```
echo -e '/usr/bin/qemu-system-arm -enable-kvm -name demo1 -enable-kvm -m 512 -
nographic  -cpu host -machine type=virt -mem-path /dev/hugepages/libvirt/qemu -kernel /
media/ram/zImage  -initrd /media/ram/fsl-image-core-ls1021atwr.ext2.gz -append "root=/dev/ram rw
console=ttyAMA0,115200" -serial pty' >> demo.args
root@localhost:~# virsh domxml-from-native qemu-argv demo.args > demo1.xml
error: XML error: No PCI buses available
```

NOTE

The above QEMU command is just an example, your command can be completely different.

The reason the above mentioned command does not work is that `domxml-from-native` expects that the suffix of the `qemu-system-` to be a canonical architecture name and `arm` is not. For ARM32 bit, little endian, the canonical name is `armv7l`. The solution could be either to manually create the xml file or to create a symbolic link `qemu-system-armv7l` to point to `qemu-system-arm` and then use the symbolic link in demo.args:

```
echo -e '/usr/bin/qemu-system-armv7l -enable-kvm -name demo1 -enable-kvm -m 512 -nographic  -cpu
host -machine type=virt -mem-path /dev/hugepages/libvirt/qemu -kernel /media/ram/zImage  -initrd /
media/ram/fsl-image-core-ls1021atwr.ext2.gz -append "root=/dev/ram rw console=ttyAMA0,115200" -serial
pty' >> demo.args
```

Libvirt LXC Examples

Basic Example

The following example shows the lifecycle of a simple LXC libvirt domain called *lxc_basic*.

1. Confirm the host Linux configuration. Begin by confirming that the host kernel is configured correctly and that rootfs setup such as mounting cgroups has been done. This can be done with the *lxc-checkconfig* command.
2. Create a libvirt XML file defining the container. The example below shows a very simple container defined in */lxc_basic.xml/* that runs the command /bin/sh and has a console:

```
$ cat lxc_basic.xml
<domain type='lxc'>
  <name>lxc_basic</name>
  <memory>500000</memory>
  <os>
    <type>exe</type>
    <init>/bin/sh</init>
  </os>
  <devices>
    <console type='pty'/>
  </devices>
</domain>
```

```
$ virsh -c lxc:/// define lxc_basic.xml
Domain lxc_basic defined from lxc_basic.xml

$ virsh -c lxc:/// list --all
 Id    Name                           State
 ----------------------------------------------------
  - lxc_basic                     shut off

$ virsh -c lxc:/// start lxc_basic
Domain lxc_basic started

$ virsh -c lxc:/// console  lxc_basic
Connected to domain lxc_basic
Escape character is ^]
#ps -ef
UID        PID  PPID  C STIME TTY          TIME CMD
root         1     0  0 13:14 ?        00:00:00 /bin/sh
root         3     1  0 13:14 ?        00:00:00 ps -ef
```

Note: The processes inside the container are running in a separate namespace, hence the different process hierarchysince no network configuration for the domain is explicitly specified, all networking interfaces are shared with the host (all the other interfaces are present too - br0 is mentioned as an example)since no filesystem configuration is specified for the domain, the filesystem is shared with the host– all host mounts are present in the container as well.

Further Information

Libvirt is an open source project and a great deal of technical and usage information is available on the libvirt.org website:

Additional references:

- Architecture: http://libvirt.org/intro.html
- Deployment: http://libvirt.org/deployment.htmlXML
- Format: http://libvirt.org/format.html
- Virsh command reference: http://linux.die.net/man/1/virsh
- User generated content: http://wiki.libvirt.org/page/Main_Page

Mailing Lists. There are three libvirt mailing lists available which can be subscribed to. Archives of the lists are also available:

- https://www.redhat.com/archives/libvir-list
- https://www.redhat.com/archives/libvirt-users
- https://www.redhat.com/archives/libvirt-announce

Annex 1: kvm_virtio_blk.xml

```
<domain type='kvm'>
  <name>kvm_virtio_blk</name>
  <uuid>b8ec80c1-4fd6-4e08-aec7-02150fab316d</uuid>
  <memory unit='KiB'>1048576</memory>
  <currentMemory unit='KiB'>1048576</currentMemory>
  <vcpu placement='static'>2</vcpu>
  <os>
    <type arch='aarch64' machine='virt'>hvm</type>
    <kernel>/boot/Image</kernel>
    <cmdline>root=/dev/vda rw console=ttyAMA0 rootwait earlyprintk</cmdline>
  </os>
  <features>
    <gic version='3'/>
  </features>
  <cpu mode='custom' match='exact'>
    <model fallback='allow'>host</model>
  </cpu>
  <clock offset='utc'/>
  <on_poweroff>destroy</on_poweroff>
  <on_reboot>restart</on_reboot>
  <on_crash>destroy</on_crash>
  <devices>
    <emulator>/usr/bin/qemu-system-aarch64</emulator>
    <disk type='file' device='disk'>
      <driver name='qemu' type='raw'/>
      <source file='/root/ubuntu_bionic_arm64_rootfs.ext4.img'/>
      <target dev='vda' bus='virtio'/>
    </disk>
    <controller type='pci' index='0' model='pcie-root'/>
    <controller type='pci' index='1' model='dmi-to-pci-bridge'/>
    <controller type='pci' index='2' model='pci-bridge'/>
    <serial type='pty'>
```

```
      <target port='0'/>
    </serial>
    <console type='pty'>
      <target type='serial' port='0'/>
    </console>
    <memballoon model='none'/>
  </devices>
</domain>
```

Annex 2: kvm_virtio_net.xml

```
<domain type='kvm' xmlns:qemu='http://libvirt.org/schemas/domain/qemu/1.0'>
  <name>kvm_virtio_net</name>
  <uuid>5c30747a-a2c9-485e-b814-2a503fef8653</uuid>
  <memory unit='KiB'>1048576</memory>
  <currentMemory unit='KiB'>1048576</currentMemory>
  <vcpu placement='static'>2</vcpu>
  <os>
    <type arch='aarch64' machine='virt'>hvm</type>
    <kernel>/boot/Image</kernel>
    <cmdline>root=/dev/vda rw console=ttyAMA0 rootwait earlyprintk</cmdline>
  </os>
  <features>
    <gic version='3'/>
  </features>
  <cpu mode='custom' match='exact'>
    <model fallback='allow'>host</model>
  </cpu>
  <clock offset='utc'/>
  <on_poweroff>destroy</on_poweroff>
  <on_reboot>restart</on_reboot>
  <on_crash>destroy</on_crash>
  <devices>
    <emulator>/usr/bin/qemu-system-aarch64</emulator>
    <disk type='file' device='disk'>
      <driver name='qemu' type='raw'/>
      <source file='/root/ubuntu_bionic_arm64_rootfs.ext4.img'/>
      <target dev='vda' bus='virtio'/>
    </disk>
    <controller type='pci' index='0' model='pcie-root'/>
    <controller type='pci' index='1' model='dmi-to-pci-bridge'/>
    <controller type='pci' index='2' model='pci-bridge'/>
    <serial type='pty'>
      <target port='0'/>
    </serial>
    <console type='pty'>
      <target type='serial' port='0'/>
    </console>
    <memballoon model='none'/>
  </devices>
  <qemu:commandline>
    <qemu:arg value='-netdev'/>
    <qemu:arg value='tap,id=tap0,script=/root/qemu-ifup,downscript=no,ifname=tap0'/>
    <qemu:arg value='-device'/>
    <qemu:arg value='virtio-net-pci,netdev=tap0'/>
  </qemu:commandline>
</domain>
```

Annex 3: kvm_virtio_blk_dataplane.xml

```
<domain type='kvm' xmlns:qemu='http://libvirt.org/schemas/domain/qemu/1.0'>
  <name>kvm_virtio_blk_dataplane</name>
  <uuid>5c30747a-a2c9-485e-b814-2a503fef8657</uuid>
  <memory unit='KiB'>1048576</memory>
  <currentMemory unit='KiB'>1048576</currentMemory>
  <vcpu placement='static'>2</vcpu>
  <os>
    <type arch='aarch64' machine='virt'>hvm</type>
    <kernel>/boot/Image</kernel>
    <cmdline>root=/dev/vda rw console=ttyAMA0 rootwait earlyprintk</cmdline>
  </os>
  <features>
    <gic version='3'/>
  </features>
  <cpu mode='custom' match='exact'>
    <model fallback='allow'>host</model>
  </cpu>
  <clock offset='utc'/>
  <on_poweroff>destroy</on_poweroff>
  <on_reboot>restart</on_reboot>
  <on_crash>destroy</on_crash>
  <iothreads>1</iothreads>
  <devices>
    <emulator>/usr/bin/qemu-system-aarch64</emulator>
    <disk type='file' device='disk'>
      <driver name='qemu' type='raw'/>
      <source file='/root/ubuntu_bionic_arm64_rootfs.ext4.img'/>
      <target dev='vda' bus='virtio'/>
    </disk>
    <disk type='file' device='disk'>
      <driver name='qemu' type='raw' cache='none' io='native' iothread='1'/>
      <source file='/root/fake-dev0-backstore.img'/>
      <address type='pci' domain='0x0000' bus='0x00' slot='0x06' function='0x0'/>
      <target dev='vdb' bus='virtio'/>
    </disk>
    <controller type='pci' index='0' model='pcie-root'/>
    <controller type='pci' index='1' model='dmi-to-pci-bridge'/>
    <controller type='pci' index='2' model='pci-bridge'/>
    <serial type='pty'>
      <target port='0'/>
    </serial>
    <console type='pty'>
      <target type='serial' port='0'/>
    </console>
    <memballoon model='none'/>
  </devices>
  <qemu:commandline>
    <qemu:arg value='-netdev'/>
    <qemu:arg value='tap,id=tap0,script=/root/qemu-ifup,downscript=no,ifname=tap0'/>
    <qemu:arg value='-device'/>
    <qemu:arg value='virtio-net-pci,netdev=tap0'/>
  </qemu:commandline>
</domain>
```

10.3 Docker Containers

10.3.1 Introduction to Docker Containers

10.3.1.1 Overview

This section is a guide and tutorial to building and using Docker Containers. Docker Containers are only available on ARM64 platforms, with the exception of LS1043 Big Endian.

Docker is a different set of userspace tools implementing Linux containers and focusing on a different set of use cases. The highlights of this open source project are ease of use, shared contributions and fast deployment. In the Docker ecosystem, containers are application environment packages, which can be easily distributed and developed collaboratively, and are guaranteed to be reproducible on any supporting platform, from the development stage to production. Currently, Docker containers are mainly targeting cloud environments.

Docker can be viewed as a set of separate components:

- **Images** - the "build" component of Docker. These are read-only copies of container root filesystems, consisting of the designed application and it's userspace dependencies. For example, an image can contain an Ubuntu application, an Apache server and a user web app. This image can be used to get a webserver running.
- **Registries** - the "distribution" component of Docker. These are public or private stores where users can upload / download images. The images are versioned, and are built from layers. When sharing images, the layers are first downloaded separately, and the image is assembled at runtime. Each layer corresponds to a specific user commit. Images can also be built using buildfiles. The most representative registry example is the Docker Hub. The current Docker installation does not support registry configuration.
- **Containers** - the "run" component of Docker. These are very similar to the containers provided by the LXC package. The main difference is that Docker containers use an overlay filesystem as container support. The layers are taken as is from the image and marked read-only, with a topmost read-write layer on top. This means that no container makes any persistent changes to the image by default - these need to be explicitly committed by the user when the environment is in the desired state. Docker containers are designed to work as application containers by default.

Docker uses a client-server architecture. The client takes the user commands and talks to a daemon, which does the entire container management work. A Linux host running the daemon is called a Docker Host. The client and daemon can run on the same machine, or on different ones, communicating through sockets or a RESTful API.

The Docker official page advertises a set of use cases, mostly relevant in cloud environments: continuous integration, continuous delivery, devops, big data and infrastructure optimization. These can be easily adapted to embedded distributions as well. As for the containers themselves, the Linux Containers chapter use cases apply, with a focus on ease of use, fast deployment and distributed usage.

10.3.2 Docker How To's

10.3.2.1 Running a webserver container

The following article describes the necessary steps to deploy a web server service using a Docker container. This is based on downloading a prepared image from the Docker hub and using it to start a container.

1. Verify if the docker daemon is running. Make sure that the board has Internet access - this will be required to download the image from the Docker Hub. The daemon will configure a Linux bridge for the containers with a private network and NAT. One can verify if the docker daemon is running by using one of the following commands:

```
$ docker info
$ docker version
```

In this case, the docker daemon is configured to start at boot time, but if for any reason the daemon is not running just issue the following command:

```
root@localhost:~# dockerd
```

2. You can search the registry for available **arm64** images, or using any other keyword.

```
root@localhost:~# docker search arm64
NAME                        DESCRIPTION                      STARS      OFFICIAL   AUTOMATED

ericvh/arm64-ubuntu                Base image for arm64 (armv8 aka aarch64) U...  6
owlab/alpine-arm64               This is Alpine Linux for arm64 (or aarch64)    3
necrose99/gentoo-arm64              Arm64 with qemu-arm64 static AMD64 host h...   1
[OK]
mickaelguene/arm64-debian           Arm64 debian base with umeq install so you...  1
[OK]
markusk/arm64-crosscompile          A debian image with the necessary tools in...  1
[OK]
snapcraft/zesty-arm64               Docker image for building Ubuntu snaps         0
[OK]
mickaelguene/arm64-debian-jenkins-slave   arm64 with java and sshd with umeq so you ...
0            [OK]
containerstack/alpine-arm64            Alpine Linux (arm64/aarch64) Docker image
0            [OK]
arm64el/helloworld-arm64el          hello world for arm64 el platform           0            [OK]
arm64el/busybox-arm64el             busybox image for arm64               0            [OK]
eqw3rty/minecraft-server-arm64         Dockerized Minecraft server for arm64       0
[OK]
arm64el/unshare-arm64el             unshare image for arm64el platform          0            [OK]
mickaelguene/arm64-debian-dev arm64       debian images with development tool ...
0            [OK]
necrose99/gentoo-arm64-chroot          base Gentoo AMD64 + ARM64 CHROOT volume. ...
0            [OK]
marcust/jessie-arm64-rust           Debian Jessie (arm64) image containing a R...  0
ip4368/node-arm64                Node.js is a JavaScript-based platform for...  0
marcust/bionic-arm64-rust           Ubuntu bionic (arm64) image containing a R...  0
snapcraft/bionic-arm64              Docker image for building Ubuntu snaps         0
[OK]
jefby/arm64                   arm64 develop                       0
dil001/nginx-arm64               These are the arm64 version of the officia...  0
knjcode/arm64-node               arm64-compatible Docker base image with No...  0
parity/rust-arm64                RUST for GitLab CI runner (ARM64 architect...  0            [OK]
thenatureofsoftware/mc-arm64           Minio client for arm64                0
thenatureofsoftware/ubuntu-arm64       Ubuntu slim images for arm64             0
dil001/fluentd-arm64             arm64 fork of the offical docker images     0
```

3. In this example, `qoriq/arm64-ubuntu` is used. It is a standard Ubuntu compiled for ARM64, with a `lighttpd` webserver installed and with a home page configured to display some information on the board, processes and networking in the container. First download the image.

```
root@localhost:~# docker pull qoriq/arm64-ubuntu
Using default tag: latest
latest: Pulling from qoriq/arm64-ubuntu
a3ed95caeb02: Pull complete
9025035f8d16: Pull complete
d54663dfcaf9: Pull complete
b940f6a4f33c: Pull complete
688957367bc4: Pull complete
```

```
88ca67eab938: Pull complete
f5f1c1a40562: Pull complete
688957367bc4: Pull complete
88ca67eab938: Pull complete
f5f1c1a40562: Pull complete
357cdf8f1a01: Pull complete
de8e5d34ebd8: Pull complete
811aa6d4eba3: Pull complete
0dc75b6c54d0: Pull complete
654cadd8a53b: Pull complete
40d300e17719: Pull complete
ce42abd87d1e: Pull complete
Digest: sha256:eaef3a08336f59155e6cfb61bf55688711214561ddf00817b5c848211ac66b00
Status: Downloaded newer image for qoriq/arm64-ubuntu:latest
```

You can check the image is available using `docker images`:

```
root@localhost:~# docker images
REPOSITORY        TAG     IMAGE ID     CREATED     SIZE
qoriq/arm64-ubuntu      latest     903eaef3b724    12 months ago  326.4 MB
root@localhost:~#
```

4. Start a container using the following command:

```
root@localhost:~# docker run -d -p 30081:80 --name=sandbox1 \
-h sandbox1 qoriq/arm64-ubuntu \
bash -c "lighttpd -f /etc/lighttpd/lighttpd.conf -D"
```

   - `run` - create and start the container. Optionally, download the image if not available on the host.
   - `-d` - start the container as a daemon.
   - `-p 30081:80` - forward port 80 in the container to port 30081 on the board.
   - `--name=sandbox1` - the name of the container (as visible to Docker).
   - `-h sandbox1` - the hostname inside the container.
   - `qoriq/arm64-ubuntu` - the base image for the container.
   - `bash -c "lighttpd -f /etc/lighttpd/lighttpd.conf -D"` - the command to execute as PID 1 in the container.

   The command will return a unique SHA for the container. You can check that the webserver is up and running by accessing `http://BOARD_IP:30081/` from a browser. You can also check the container is running using docker:

```
root@localhost:~# docker ps -a

CONTAINERID     IMAGE         COMMAND             CREATED     STATUS             PORTS
NAMES
b5b8a45db81c    qoriq/arm64-ubuntu  "bash -c 'lighttpd -f"    16 hours ago   Exited (0)16 hours
ago               sandbox1
```

5. Stopping and deleting the container are easy operations:

```
root@localhost:~# docker stop sandbox1
sandbox1
root@localhost:~# docker rm sandbox1
sandbox1
```

6. A similar command can be used to delete the image from the board.

```
root@localhost:~# docker rmi qoriq/arm64-ubuntu
Untagged: qoriq/arm64-ubuntu:latest
Untagged: qoriq/arm64-
ubuntu@sha256:eaef3a08336f59155e6cfb61bf55688711214561ddf00817b5c848211ac66b00
Deleted: sha256:903eaef3b7240612111df4308f4d598ae1dee14b696a4b01654175b6771520f1
Deleted: sha256:48e73c491543279a59d202470394f0f91acd9b3a8a6f5f9befa933bc4cf4776a
Deleted: sha256:e21b9d6aa0007e242abb10948b13c93e4471694695a91a47d639f45927f25eb6
Deleted: sha256:7ec2184e81ef396a206e965e6dae42a122c4348dd7cfee1b731aa59931a5ec82
Deleted: sha256:0b081c8c711c2d14522ea1b5763e5ead19ab2975e4c28864a0ee2c0942ebae43
Deleted: sha256:b256d9ce72b40a1dc9dfdb13003a44976ba81e4fb31e774e913ed57241424231
Deleted: sha256:e07c8e0adb08295db7e3f2e13f41be622d5b8590575f87813922dd4ef0914e8f
Deleted: sha256:09ec9672e9e6d30855f1274415edf6a023b86764261b6cd88fc2b692f997977d
Deleted: sha256:d29d57006e3df9a03fb3d430183166c9337378404c1ad66db391251ea24592fd
Deleted: sha256:84be8839209cbbecd3b3f064b9593e16d30468d71c788fc3ab8f3125990002bf
Deleted: sha256:09be261c306e6c01756d16c31e2a9d4b638e8d205a068b767cb0a078480633a9
Deleted: sha256:47d9e04c91309d23f8135f579a302c2309b206cb392c42c55ec13b2c26fb317f
Deleted: sha256:8495eed3352e7d2a237f179e3a3a6e449a56821a77e2efd943bc9ccf8d6d964c
Deleted: sha256:423a2c50f96dad2f267bbbe11a8a9efc21e776419fbd618ec1a9a21e918c918b
Deleted: sha256:67629909bfc67e60ba87451caf1f98b375e8b81f21a87bab5f5e2740a78c025b
Deleted: sha256:f821f1edfff4c38033e84024e844e503d5e0e470155c4bd69ec3f0af04f01b6b
Deleted: sha256:837a3e2cff861610e7672192dac0342041c30b2548a3a63a47b92d964a862c8a
Deleted: sha256:129149fe5b4dc97f940c38cd37cfa3fc06bbdc12a8d9d22e4aa3b3e4ff709346
```

10.4 NFV OpenStack

10.4.1 OpenStack Nova Overview

The OpenStack project is an open source cloud computing platform that supports all types of cloud environments. OpenStack provides an Infrastructure-as-a-Service (IaaS) solution through a variety of complementary services. Each service offers an Application Programming Interface (API) that facilitates this integration.

10.4.2 Building OpenStack using Flexbuild

This section contains instructions to build the root file system with all the packages required to install the OpenStack Nova compute. OpenStack Nova Pike release component installation will be done after booting the device with this root file system.

To build OpenStack with Flexbuild, follow these steps:

```
$ cd flexbuild
$ source setup.env
set CONFIG_BUILD_OPENSTACK_NOVA to y from default n in configs/build_lsdk.cfg
$ flex-builder  -i mkrfs
$ flex-builder -c apps (build all apps components)
               or
$ flex-builder -c openstack-nova (build OpenStack only)
$ flex-builder -i mkbootpartition
$ flex-builder -i merge-component
$ flex-builder -i packrfs
$ cd build/images
$ flex-installer -b bootpartition_arm64_lts_4.19.tgz -r rootfs_lsdk_20.04_LS_arm64_cloud.tgz  -
d /dev/sdX
```

Chapter 11
Power Management

11.1 Power management user manual

Linux SDK for QorIQ Processors

QorIQ Processors have features to minimize power consumption at several different levels. All processors support a sleep mode (LPM20). Some processors, such as T1040, LS1021, also support a deep sleep mode (LPM35).

The following power management features are supported on various QorIQ processors:

- Dynamic power management
- Shutting down unused IP blocks
- Cores support low power modes (such as PW15)
- Processors enter low power state (LPM20, LPM35)
  - LPM20 mode: most part of processor clocks are shut down
  - LPM35 mode: power is removed to cores, cache and IP blocks of the processor such as DIU, eLBC, PEX, eTSEC, USB, SATA, eSDHC etc.
- CPU hotplug: If cores are down at runtime, they will enter low power state.

The wake-up event sources caused quitting from low power mode are listed as below:

- Wake on LAN (WoL) using magic packet
- Wake by MPIC timer or FlexTimer
- Wake by Internal and external interrupts

For more information on a specific processor, see the processor's Reference Manual.

Kernel configure tree view options

For Arm platforms

Kernel configure tree view options	Description
`Power management options  -->` `  [*] Suspend to RAM and standby`	Enable sleep feature

`-> Device Drivers`
`  -> Real Time Clock`
`  -> <*> Freescale FlexTimer alarm timer`
	Auto enable RCPM driver, once enabled FTM alarm driver

`CPU Power Management  --->`
`CPU Idle  --->`
`[*] CPU idle PM support`
`[*]  Ladder governor (for periodic timer tick)`
`-*-  Menu governor (for tickless system)`
	Enable the CPU Idle driver

Table continues on the next page...

Table continued from the previous page...

Kernel configure tree view options	Description
Arm CPU Idle Drivers ---> [*] Generic Arm/Arm64 CPU idle Driver	

Table continues on the next page...

Compile-time configuration options

Linux framework	Hardware feature	Platform	Kernel config
Suspend	LPM20/SWLPM20	LS1012A, LS1021A, LS1046A, LS1043A, LS1088A, LS2088A, LX2160A, LS1028A	CONFIG_SUSPEND
RTC	Wake by Flextimer	LS1012A, LS1021A, LS1046A, LS1043A, LS1088A, LS2088A, LX2160A, LS1028A	CONFIG_RTC_DRV_FSL_FTM_ALARM
CPU idle	PH20/PW20/PW15	LS1012A, LS1021A, LS1046A, LS1043A, LS1088A, LS2088A, LX2160A, LS1028A	CONFIG_ARM_CPUIDLE

Device tree binding

Property	Type	Description
fsl, #rcpm-wakeup-cells	unsigned int	The number of cells in "rcpm-wakeup" except the pointer to "rcpm"
little-endian	bool	Present if RCPM register is little-endian (such as LS1088A, LS2088A, LX2160A)
fsl, rcpm-wakeup	unsigned int	Required if the IP block can work as a wakeup source

For processors with integrated RCPM

```
aliases {
    rtc1 = &ftm_alarm0;
};
rcpm: rcpm@1ee208c {
    compatible = "fsl,ls1046a-rcpm", "fsl,qoriq-rcpm-2.1+";
    reg = <0x0 0x1ee208c 0x0 0x4>;
    #fsl,rcpm-wakeup-cells = <1>;
};

ftm_alarm0: timer@29d0000 {
    compatible = "fsl,ls1046a-ftm-alarm";
    reg = <0x0 0x29d0000 0x0 0x10000>;
```

```
    fsl,rcpm-wakeup = <&rcpm 0x20000>;
    interrupts = <GIC_SPI 86 IRQ_TYPE_LEVEL_HIGH>;
    big-endian;
};
```

See the Linux document: Documentation/devicetree/bindings/soc/fsl/rcpm.txt

Source files

The source files are maintained in the Linux kernel source tree.

Source file	Description
drivers/soc/fsl/rcpm.c	The RCPM driver needed by the sleep feature
drivers/rtc/rtc-fsl-ftm-alarm.c	The FTM timer driver worked as a wakeup source
drivers/cpuidle/cpuidle-arm.c	The cpuidle driver for Arm core

Verification in Linux

- Cpuidle Driver

  The cpuidle driver can switch CPU state according to the idle policy (governor). For more information, see "Documentation/cpuidle/sysfs.txt" in kernel source code.

  ```
  /* Check the cpuidle driver which is currently used. */
  # cat /sys/devices/system/cpu/cpuidle/current_driver

  /* Check the following directory to see the detailed statistic information of each state on each
  CPU. */
  /sys/devices/system/cpu/cpu0/cpuidle/state0/
  /sys/devices/system/cpu/cpu0/cpuidle/state1/
  ```

- CPU hot plug

  CPU can enter sleep which reduces the power consumption dramatically.

  ```
  # echo 0 > /sys/devices/system/cpu/cpu2/online
  # echo 1 > /sys/devices/system/cpu/cpu2/online
  # echo 0 > /sys/devices/system/cpu/cpu0/online
  # echo 1 > /sys/devices/system/cpu/cpu0/online
  ```

- Sleep and Wake up by FTM timer

  Starts a FTM timer. It triggers an interrupt to wake up the system in 10 seconds.

  ```
  echo 0 > /sys/class/rtc/rtc1/wakealarm && echo +10 >/sys/class/rtc/rtc1/wakealarm && echo mem > /
  proc/power/state
  ```

Supporting documentation

- QorIQ processor reference manuals

11.2 CPU Frequency Switching User Manual

Linux SDK for QorIQ Processors

Abbreviations and Acronyms

DFS: Dynamic Frequency Scaling

Description

QorIQ Processors support DFS (Dynamic Frequency Switching) feature, also known as CPU Frequency Switch, which can change the frequency of cores dynamically.

For more information on a specific processor, refer to processor Reference Manual.

Kernel Configure Tree View Options	Description
CPU Power Management --> CPU Frequency scaling --> [*] CPU Frequency scaling <*> CPU frequency translation statistics Default CPUFreq governor (userspace) --> -*- 'userspace' governor for userspace frequency scaling Arm CPU frequency scaling drivers --> <*> CPU frequency scaling driver for Freescale QorIQ SoCs	Enable the CPU frequency driver

Compile-time Configuration Options

Linux Framework	Hardware Feature	Platform	Kernel Config
cpufreq	DFS	ALL	CONFIG_CPU_FREQ, CONFIG_CPU_FREQ_DEFAULT_GOV_USERSPACE
cpufreq	DFS	Layerscape	CONFIG_QORIQ_CPUFREQ

User Space Application

Simply using command "cat" and "echo" can verify this feature.

Device Tree Binding

Property	Type	Status	Description
#clock-cells	unsigned int	Required	The number of cells in a clock-specifier
clocks	handle	Required	Clock source handle
compatible	String	Required	Compatible strings
reg	unsigned int	Required	register address range

Table continues on the next page...

Property	Type	Status	Description

Table continues on the next page...

```
clockgen: clocking@1ee1000 {
    compatible = "fsl,ls1012a-clockgen";
    reg = <0x0 0x1ee1000 0x0 0x1000>;
    #clock-cells = <2>;
    clocks = <&sysclk>;
};
```

Source Files

The driver source is maintained in the Linux kernel source tree.

Table continued from the previous page...

Source File	Description
drivers/cpufreq/qoriq_cpufreq.c	CPU frequency scaling driver for qoriq chips

Verification in Linux

- CPU frequency mode

```
In order to test the CPU frequency scaling feature, we need to enable the CPU frequency feature
on the
menuconfig and choose the USERSPACE governor.
You can learn more about CPU frequency scaling feature by referring to the kernel documents.
They all are put under Documentation/cpu-freq/ directory.
For example: all the information about governors is put in Documentation/cpu-freq/governors.txt.

Test step:
1. list all the frequencies a core can support (take cpu 0 for example) :
 # cat /sys/devices/system/cpu/cpu0/cpufreq/scaling_available_frequencies
1199999 599999 299999 799999 399999 199999 1066666 533333 266666

2.  check the CPU's current frequency
# cat /sys/devices/system/cpu/cpu0/cpufreq/scaling_cur_freq
1199999

3. change the CPU's frequency we expect:
# echo 799999 > /sys/devices/system/cpu/cpu0/cpufreq/scaling_setspeed

You can check the CPU's current frequency again to confirm if the frequency transition is
successful.

Please note that if the frequency you want to change to doesn't support by current CPU, kernel
will
round up or down to one CPU supports.
```

11.3 Thermal management user manual

Description

The thermal management function is based on TMU (Thermal Monitoring Unit).

The driver sets two thresholds for management function. If the CPU temperature crosses the first one (75 C for LS2080. 85 C for other platforms), the driver will trigger CPU frequency limitation auto-scaling according to the temperature trend; If the CPU temperature crosses the second one (85 C for LS2080, 95 C for other platforms, critical for core) the driver will shut down the system.

User could also get current temperature through sysfs interface.

Specifications

Target boards:	T1040RDB, T1042RDB, T1023RDB, T1024RDB, LS1012ARDB, LS1021ATWR, LS1028ARDB, LS1043ARDB, LS1046ARDB, LS1088ARDB, LS2088ARDB, LX2160ARDB
Operating system:	Linux 3.12+

Kernel Configure Tree View Options (For PowerPC platform)

Kernel Configure Tree View Options	Description

`Platform support  --->`
`    CPU Frequency scaling  --->`
`        PowerPC CPU frequency scaling drivers --->`
`            <*> CPU frequency scaling driver for NXP QorIQ SoCs`
	Enable CPUfreq driver.

`Device Drivers  --->`
`    [*] Generic Thermal sysfs driver  --->`
`        [*] generic cpu cooling support`
`        [*] Freescale QorIQ Thermal Monitoring Unit`
	Enable thermal management framework, cpu cooling device support and QorIQ thermal driver.

Kernel Configure Tree View Options (For Arm platform)

Kernel Configure Tree View Options	Description

`CPU Power Management  --->`
`    CPU Frequency scaling  --->`
`        Arm CPU frequency scaling drivers  --->`
`            <*> CPU frequency scaling driver for NXP QorIQ SoCs`
	Enable CPUfreq driver.

`Device Drivers  --->`
`    [*] Generic Thermal sysfs driver  --->`
`        [*] generic cpu cooling support`
	Enable thermal management framework, cpu cooling device support and QorIQ thermal driver.

Table continued from the previous page...

Kernel Configure Tree View Options	Description
`[*] Freescale QorIQ Thermal Monitoring Unit`	

Compile-time Configuration Options

Option	Values	Default Value	Description
CONFIG_QORIQ_CPUFREQ	y/n	n	Enable QorIQ CPUfreq driver
CONFIG_THERMAL	y/m/n	n	Enable thermal management support
CONFIG_CPU_THERMAL	y/m/n	n	Enable cpu cooling device support
CONFIG_QORIQ_THERMAL	y/m/n	n	Enable QorIQ thermal driver

Device Tree Binding

```
tmu: tmu@f0000 {
        compatible = "fsl,qoriq-tmu";
        reg = <0xf0000 0x1000>;
        interrupts = <18 2 0 0>;
        fsl,tmu-range = <0x000a0000 0x00090026 0x0008004a 0x0001006a>;
        fsl,tmu-calibration = <0x00000000 0x00000025
                0x00000001 0x00000028
                0x00000002 0x0000002d
                0x00000003 0x00000031
                0x00000004 0x00000036
                0x00000005 0x0000003a
                0x00000006 0x00000040
                0x00000007 0x00000044
                0x00000008 0x0000004a
                0x00000009 0x0000004f
                0x0000000a 0x00000054

                0x00010000 0x0000000d
                0x00010001 0x00000013
                0x00010002 0x00000019
                0x00010003 0x0000001f
                0x00010004 0x00000025
                0x00010005 0x0000002d
                0x00010006 0x00000033
                0x00010007 0x00000043
                0x00010008 0x0000004b
                0x00010009 0x00000053

                0x00020000 0x00000010
                0x00020001 0x00000017
                0x00020002 0x0000001f
                0x00020003 0x00000029
                0x00020004 0x00000031
                0x00020005 0x0000003c
                0x00020006 0x00000042
```

```
                0x00020007 0x0000004d
                0x00020008 0x00000056

                0x00030000 0x00000012
                0x00030001 0x0000001d>;
};
```

Source Files

The driver source is maintained in the Linux kernel source tree.

Source File	Description
drivers/thermal/qoriq_thermal.c	QorIQ thermal driver.

Verification in Linux

There are two parts for verification: management and monitor.

[Management:]

1. When CPU temperature cross the first threshold, CPU frequency may be reduced by changing frequency limitation, use the following command to check the current frequency:

```
~$ cat /sys/devices/system/cpu/cpu*/cpufreq/scaling_cur_freq
```

2. When CPU temperature crosses the second threshold, the system shuts down.

[Monitor:]

```
~$ cat /sys/class/thermal/thermal_zone*/temp
35000
36000
35000
...
# There can be multiple outputs according to the thermal zone number of the system. The temperature
are 35 C, 36 C, 35 C etc.
```

11.4 System Monitor

11.4.1 Power Monitor User Manual

Description

There are two methods currently we can use to measure the power consumption which are called online and offline power monitoring respectively. The difference between them is that offline power monitoring support measuring power consumption during sleep or deep sleep.

The Power Monitor can be supported on P4080DS/P5020DS/P5040DS/T4240QDS/LS1043QDS/LS1046QDS/LS1088QDS/LS2088QDS board.

This User guide uses the LS240QDS board as an example.

Online Power Monitoring

The Lm-sensors tool (download from http://dl.lm-sensors.org/lm-sensors/releases) will be used to read the power/temperature from on-boards sensors. The drivers vary from sensor to sensor. Basically they would be INA220, ZL6100 and ADT7461 etc.

The device driver support either a built-in kernel or module loading.

Kernel Configure Tree View Options

Option	Description

`Device Drivers --->`
` <*> Hardware Monitoring support  --->`
`    <*>   Texas Instruments INA219 and compatibles`
	Enables INA220

`Device Drivers --->`
`    [*]   Enable compatibility bits for old user-space`
`    <*>   I2C device interface`
`    [*]   Autoselect pertinent helper modules`
`          I2C Hardware Bus support  --->`
`              <*> MPC107/824x/85xx/512x/52xx/ 83xx/86xx`
	Enables I2C block device driver support

`Device Drivers --->`
`      <*>   I2C bus multiplexing support`
`          Multiplexer I2C Chip support  --->`
`              <*> Philips PCA954x I2C Mux/ switches`
	Enables I2C bus multiplexing PCA9547

Compile-time Configuration Options

Option	Values	Default Value	Description
CONFIG_I2C_MPC	y/n	y	Enable I2C bus protocol
SENSORS_INA2XX	y/n	y	Enables INA220
CONFIG_I2C_MUX_PCA954x	y/n	y	Enables I2C multiplexing PCA9547

Device Tree Binding

Property	Type	Status	Description
compatible	String	Required	"Philips,pca9547" for pca9547
reg	integer	Required	reg = <0x77>
compatible	String	Required	"ti,ina220" for ina220
reg	integer	Required	reg = <the i2c address of ina220>

```
Default node:
       i2c@118000 {
            pca9547@77 {
                compatible = "philips,pca9547";
```

```
                reg = <0x77>;
                #address-cells = <1>;
                #size-cells = <0>;

                channel@2 {
                    #address-cells = <1>;
                    #size-cells = <0>;
                    reg = <0x2>;

                    ina220@40 {
                        compatible = "ti,ina220";
                        reg = <0x40>;
                        shunt-resistor = <1000>;
                    };

                    ina220@41 {
                        compatible = "ti,ina220";
                        reg = <0x41>;
                        shunt-resistor = <1000>;
                    };

                    ina220@44 {
                        compatible = "ti,ina220";
                        reg = <0x44>;
                        shunt-resistor = <1000>;
                    };

                    ina220@45 {
                        compatible = "ti,ina220";
                        reg = <0x45>;
                        shunt-resistor = <1000>;
                    };

                    ina220@46 {
                        compatible = "ti,ina220";
                        reg = <0x46>;
                        shunt-resistor = <1000>;
                    };

                    ina220@47 {
                        compatible = "ti,ina220";
                        reg = <0x47>;
                        shunt-resistor = <1000>;
                    };
                };
            };
```

Source Files

The driver source is maintained in the Linux kernel source tree.

Source File	Description
drivers/i2c/muxes/i2c-mux-pca954x.c	PCA9547 driver
drivers/hwmon/ina2xx.c	ina220 driver

Test Procedure

Do the following to validate under the kernel

1. The bootup information is displayed:

```
......
i2c /dev entries driver
mpc-i2c ffe118000.i2c: timeout 1000000 us
mpc-i2c ffe118100.i2c: timeout 1000000 us
mpc-i2c ffe119000.i2c: timeout 1000000 us
mpc-i2c ffe119100.i2c: timeout 1000000 us
i2c i2c-0: Added multiplexed i2c bus 6
i2c i2c-0: Added multiplexed i2c bus 7
i2c i2c-0: Added multiplexed i2c bus 8
i2c i2c-0: Added multiplexed i2c bus 9
i2c i2c-0: Added multiplexed i2c bus 10
i2c i2c-0: Added multiplexed i2c bus 11
i2c i2c-0: Added multiplexed i2c bus 12
i2c i2c-0: Added multiplexed i2c bus 13
pca954x 0-0077: registered 8 multiplexed busses for I2C mux pca9547
ina2xx 8-0040: power monitor ina220 (Rshunt = 1000 uOhm)
ina2xx 8-0041: power monitor ina220 (Rshunt = 1000 uOhm)
ina2xx 8-0045: power monitor ina220 (Rshunt = 1000 uOhm)
ina2xx 8-0046: power monitor ina220 (Rshunt = 1000 uOhm)
ina2xx 8-0047: power monitor ina220 (Rshunt = 1000 uOhm)
ina2xx 8-0044: power monitor ina220 (Rshunt = 1000 uOhm)
......
```

```
root@LS1046ARDB:~# sensors
ina220-i2c-0-40
Adapter: 2180000.i2c
in0:          +0.01 V
in1:          +1.04 V
power1:        6.82 W
curr1:        +6.48 A

adt7461-i2c-0-4c
Adapter: 2180000.i2c
temp1:        +29.0°C  (low  =  +0.0°C, high = +85.0°C)
                       (crit = +85.0°C, hyst = +75.0°C)
temp2:        +47.8°C  (low  =  +0.0°C, high = +85.0°C)
                       (crit = +85.0°C, hyst = +75.0°C)
```

NOTE

Please make sure to include the "sensors" command in your rootfs

11.4.2 Thermal Monitor User Manual

Description

The Temperature Monitoring function is provided by the chip ADT7461.

For LX2160ARDB, the chip is SA56004ED and SA56004FD.

This driver exports the values of Temperature to SYSFS. The user space lm-sensors tools can get and display these values.

Kernel Configure Tree View Options

Kernel Configure Tree View Options	Description

`Device Drivers  --->`
`  [*] Hardware Monitoring support  --->`
`  [*] National Semiconductor LM90 and compatibles`
	Enable thermal monitor chip driver like ADT7461.

`Device Drivers  --->`
`  <*> I2C bus multiplexing support  --->`
`  Multiplexer I2C Chip support  --->`
`  <*> Philips PCA954x I2C Mux/switches`
	Enable I2C PCA954x multiplexer support

Compile-time Configuration Options

Option	Values	Default Value	Description
CONFIG_HWMON	y/m/n	n	Enable Hardware Monitor
CONFIG_SENSORS_LM90	y/m/n	n	Enable ATD7461 and SA56004 driver
CONFIG_I2C_MUX	y/m/n	n	Enable I2C bus multiplexing support
CONFIG_I2C_MUX_PCA954x	y/m/n	n	Enable PCA954x driver

Device Tree Binding

```
    adt7461@4c {
        compatible = "adi,adt7461";
        reg = <0x4c>;
    };

    pca9547@77 {
        compatible = "philips,pca9547";
        reg = <0x77>;
    };
```

Source Files

The driver source is maintained in the Linux kernel source tree.

Source File	Description
drivers/hwmon/hwmon.c	Linux hwmon subsystem support
drivers/hwmon/lm90.c	ADT7461 chip driver
drivers/i2c/i2c-mux.c	I2C bus multiplexing support
drivers/i2c/muxes/pca954x.c	PCA954x chip driver

Verification in Linux

There are two ways to get temperature results.

```
1. You can manually read the thermal interfaces in sysfs:
~$ ls /sys/class/hwmon/hwmon1/devices
alarms            temp1_crit        temp1_min_alarm   temp2_max_alarm
driver            temp1_crit_alarm  temp2_crit        temp2_min
hwmon             temp1_crit_hyst   temp2_crit_alarm  temp2_min_alarm
modalias          temp1_input       temp2_crit_hyst   temp2_offset
name              temp1_max         temp2_fault       uevent
power             temp1_max_alarm   temp2_input       update_interval
subsystem         temp1_min         temp2_max

~$ cat /sys/class/hwmon/hwmon1/devices/temp1_input
29000

2. You can use lm_sensors tools as follows.
~ # sensors

adt7461-i2c-1-4c
Adapter: MPC adapter
temp1:       +34.0 C  (low  =  +0.0 C, high = +85.0 C)
                      (crit = +85.0 C, hyst = +75.0 C)
temp2:       +48.5 C  (low  =  +0.0 C, high = +85.0 C)
                      (crit = +85.0 C, hyst = +75.0 C)
```

"lm_sensors is integrated into rootfs file system by default. If there is no "sensors" command in your rootfs just add lmsensors-sensors package and build your own rootfs."

Chapter 12
PREEMPT_RT Real Time Linux

12.1 PREEMPT_RT Real-Time Linux

Real-time applications have operational deadlines between some triggering event and the response of the application to that event. To meet these operational deadlines, programmers use real-time operating systems (RTOS) on which the maximum response time can be calculated or measured reliably for the given application and environment.

There are various approaches available for providing Real Time (RT) NXP LSDK uses Linux PREEMPT_RT patch (also known as RT patch) to meet these requirements. PREEMPT_RT patch can be pulled from kernel.org git repository.

See kernel.org wiki page for more information.

PREEMPT_RT patch in LSDK

In LSDK 20.04, a separate branch “linux-4.19-rt” of Linux kernel is used for PREEMP RT, and PREEMP_RT patches have been applied in this kernel branch.

Supporting status

Platform	Currently support the following platforms: • LS1046A (little endian, ARM64) • LS1088A (little endian, ARM64) • LS2088A (little endian, ARM64) • LS1043A (little endian, ARM64) • LX2160A (little endian, ARM64)
Software	Linux (with PREEMPT_RT patch), (SMP-Linux: non KVM)

Enable Preempt RT in Linux Kernel

Enable “ CONFIG_PREEMPT_RT_FULL=y” in the kernel:

```
Kernel options --->
Preemption Model (Fully Preemptible Kernel (RT)) --->
(X) Fully Preemptible Kernel (RT)
```

By default, RT feature is enabled in the defconfigs of the LSDK kernel RT branch.

Note that, once preempt RT feature is enabled, throughput-performance of the system might decrease (and this decrease is expected as per design of RT).

Device tree binding

No RT specific changes are required.

Build RT Kernel by using flexbuild

Default kernel branch used by flexbuid is Non-RT kernel, hence use RT kernel release tag to build RT kernel and the other components.

- **Separately Build Preempt RT Kernel Image**

```
flex-builder -c linux:linux:LSDK-20.04-V4.19-RT
```

  In the above specified command “LSDK-20.04-V4.19-RT” refers to release tag for preempt RT kernel in LSDK 20.04.

- **Build all firmware, linux, apps components, and LSDK rootfs with Preemp RT Kernel**

  To use Preempt RT kernel as default kernel for all components building, modify kernel tag name in the flexbuild configuration file:

  1. Open `configs/build_lsdk.cfg in flexbuild` and replace “`linux_repo_tag=LSDK-20.04-V4.19`” with “`linux_repo_tag=LSDK-20.04-V4.19-RT`”
  2. Then flexbuild uses Preempt RT kernel to build all firmware, Linux, apps component and LSDK rootfs, refer to flexbuild document for details.

Verification in Linux

To verify that PREEMPT_RT Patch is applied and RT is enabled in Linux configuration after Linux boots up, check Linux version on Linux prompt, pattern “ PREEMPT RT ” in the version string should be found. For example:

```
root@ls2088ardb:~# uname -a
Linux ls2088ardb 4.19.90-rt35-01509-gcb100a5 #1 SMP PREEMPT RT Wed Mar 18 09:27:38 Local time zone
must be se aarch64 aarch64 aarch64 GNU/Linux
```

Test Tool

RT-Tests is a test suite, it contains programs to test various real-time Linux features. The following programs are part of the rt-tests:

- cyclictest: latency detection
- hackbench
- pip_stress
- pi_stress
- pmqtest
- ptsematest
- rt-migrate-test
- sendme
- signaltest
- sigwaittest
- svsematest

RT-Test is integrated into LSDK Ubuntu devel root filesystems by default, but it is not in Ubuntu main root filesystems. RT-test can be built from source code downloaded from kernel.org git repository or can be installed using apt command `sudo apt install -y rt-tests`.

PREEMPT_RT feature provides RTT (Real-Time throttling) feature. For details on RTT, refer “ Documentation/scheduler/sched-rt-group.txt” in Linux source code. RTT might get triggered if, heavy traffic leading to high latency. It can be disabled by:

```
root@localhost:~# echo -1 > /proc/sys/kernel/sched_rt_runtime_us
```

Refer to “ Benchmarks and Test Cases “ section in RTwiki for the other benchmarks and test tools.

Supporting documentation

https://rt.wiki.kernel.org/index.php/Main_Page

Chapter 13
Benchmarking guidelines

13.1 Coremark

13.1.1 Test Environment

Objectives

The Coremark benchmaring guideline aims to do the following:

- Baseline the Coremark performance on QorIQ Layerscape platforms
- Identify any optimizations and ensure they are implemented on the QorIQ Layerscape platforms.
- Investigate other changes that may improve performance

Hardware Platform Identification

Board	Silicon Revision	Default Freqeuncy(Core/CCB/DDR) in MHz	Core Type
LS1021ATWR	Rev2.0	1000/300/1600	cortex A7
LS1043ARDB	Rev1.1	1600/400/1600	cortex A53
LS1046ARDB	Rev1.0	1800/700/2100	cortex A72
LS1088ARDB	Rev1.0	1600/700/2100	cortex A53
LS2088ARDB	Rev1.0	2000/800/2133	cortex A72

For more information on each boards switch settings, refer to the boards's Reference Manual or Getting Started Guide on http://www.nxp.com/

Software Platforma Identification

All software was built from Layerscape SDK.

Boot Loader

U-boot 2020.04 with NXP-specific patches on top.

Coremark Application

- **Source Code Download:**

  Coremark Source code can be downloaded from http://www.eembc.org/coremark/index.php

  Toolchain version is gcc version 7.4.0 (Ubuntu/Linaro 7.4.0-1ubuntu1~18.04.1)

- **Build Coremark**

  1. If you are compiling Coremark on a 64-bit Linux machine (machine on which you have the intended compiler), go to `coremark_v1.0/linux64` directory, else go to `coremark_v1.0/linux directory`.
  2. Give the complete compiler path under "CC" flag in `core_portme.mak` file.

3. For a 32-bit Arm platform, the toolchain path is `/usr/bin/arm-linux-gnueabihf-gcc` by default. Change the “CC” flag in `linux/core_portme.mak` as the following:

```
CC = /usr/bin/arm-linux-gnueabihf-gcc
```

4. For a 64-bit Arm platform, the toolchain path is `/usr/bin/aarch64-linux-gnu-gcc`. Change the “CC” flag in `linux64/core_portme.mak` as the following:

```
CC = /usr/bin/aarch64-linux-gnu-gcc
```

5. Go back to the `coremark_v1.0` directory. Perform the following commands on the command line:
   - For a 64-bit Arm platform (LS1043A/LS1046A/LS1088A/LS2088A):

     Single Thread:

     ```
     make PORT_CFLAGS="-O3 -funroll-all-loops --param max-inline-insns-auto=550"
     ```

     Multithread:

     ```
     make PORT_CFLAGS="-O3 -funroll-all-loops --param max-inline-insns-auto=550 -
     DMULTITHREAD=<Thread_number> -DUSE_FORK=1"
     ```

   - For a 32-bit Arm platform (LS1021A and LS1043A/LS1046A 32-bit)

     Single Thread:

     ```
     make PORT_CFLAGS="-O3 -march=armv7-a -mfloat-abi=hard -mfpu=neon -mtune=cortex-a7 -
     funroll-all-loops --param max-inline-insns-auto=300 -static"
     ```

     Multithread:

     ```
     make PORT_CFLAGS="-O3 -march=armv7-a -mfloat-abi=hard -mfpu=neon -
     mtune=cortex-a7 -funroll-all-loops --param max-inline-insns-auto=300 -static -
     DMULTITHREAD=<Thread_number> -DUSE_FORK=1"
     ```

6. The command will first compile, generate the executable file (`coremark.exe`) and try to run the benchmark. Transfer the executable file to the target.

13.1.2 Test Procedure

Running test and result collection

1. Deploy the target board with corresponding software mentioned in hte previous section.
2. Put coremark binary compiled with optimized flags mentioned in section test environment on target board
3. Run the benchmark:

```
coremark.exe
```

Check the log below for the results:

```
2K performance run parameters for coremark.
CoreMark Size    : 666
Total ticks      : 16663
Total time (secs): 16.663000
Iterations/Sec   : 6601.452320
Iterations       : 110000
Compiler version : GCC5.4.0 20160609
```

```
Compiler flags   : -mcpu=cortex-a53 -O3 -funroll-all-loops --param max-inline-insns-auto=550 -
DPERFORMANCE_RUN=1  -lrt
Memory location  : Please put data memory location here
                        (e.g. code in flash, data on heap etc)
seedcrc          : 0xe9f5
[0]crclist       : 0xe714
[0]crcmatrix     : 0x1fd7
[0]crcstate      : 0x8e3a
[0]crcfinal      : 0x33ff
Correct operation validated. See readme.txt for run and reporting rules.
CoreMark 1.0 : 6601.452320 / GCC5.4.0 20160609 -mcpu=cortex-a53 -O3 -funroll-all-loops --param max-
inline-insns-auto=550 -DPERFORMANCE_RUN=1  -lrt / Heap
```

This test measures the variation of the benchmark results, so an average across 5 runs was taken for every result.

13.2 Dhrystone

13.2.1 Test Environment

Objectives

The Dhrystone benchmaring guideline aims to do the following:

- Baseline the Dhrystone performance on QorIQ Layerscape platforms.
- Identify any optimizations and ensure they are implemented on the QorIQ Layerscape platforms.
- Investigate other changes that may improve performance.

Hardware Platform Identification

Board	Silicon Revision	Default Freqeuncy(Core/CCB/DDR) in MHz	Core Type
LS1021ATWR	Rev2.0	1000/300/1600	cortex A7
LS1043ARDB	Rev1.1	1600/400/1600	cortex A53
LS1046ARDB	Rev1.0	1800/700/2100	cortex A72
LS1088ARDB	Rev1.0	1600/700/2100	cortex A53
LS2088ARDB	Rev1.0	2000/800/2133	cortex A72

For more information on each boards switch settings, refer to the boards's Reference Manual or Getting Started Guide on http://www.nxp.com/

Software Platforma Identification

All software was built from Layerscape SDK.

Boot Loader

U-boot 2020.04 with NXP-specific patches on top.

Dhrystone Application

Dhrystone is a synthetic computing benchmark program intended to be representative of system (integer) programming. It is a simple program that is carefully designed to statistically mimic the processor usage of some common set of programs. It also has some pitfalls, for the performance will be affected by many factors such as the compiler, libraries etc.

- **Source Code Download:**

  Dhrystone 1.0 Source code can be downloaded from: http://www.xanthos.se/~joachim/vaxmips.html (`Dhrystone-src.tar.gz`)

  Toolchain version is `gcc version 7.4.0 (Ubuntu/Linaro 7.4.0-1ubuntu1~18.04.1).`

- **Build Dhrystone**

  1. Download the source code from http://www.xanthos.se/~joachim/vaxmips.html `Dhrystone-src.tar.gz`
  2. Unpack the package
  3. Go back to the `dhrystone_v1.0` directory and build dhrystone binary
     - For a 64-bit Arm platform:

       ```
       #/usr/bin/aarch64-linux-gnu-gcc -O3 -funroll-all-loops --param max-inline-insns-
       auto=550 -static  dhry21a.c dhry21b.c timers.c -o dhrystone
       ```

     - For 32-bit Arm platform:

       ```
       # /usr/bin/arm-linux-gnueabihf-gcc -O3 -funroll-all-loops --param max-inline-insns-
       auto=550 -static  dhry21a.c dhry21b.c timers.c -o dhrystone
       ```

13.2.2 Test Procedure

Running test and result collection

1. Deploy the target board with corresponding software mentioned in hte previous section.
2. Put Dhrystone binary compiled with optimized flags mentioned in section 2.2.2.3 on target board
3. Run the benchmark:

   ```
   echo 50000000 | ./dhrystone
   ```

Check the log below for the results:

```
Dhrystone Benchmark, Version 2.1 (Language: C)

Please give the number of runs through the benchmark:
Execution starts, 50000000 runs through Dhrystone
Execution ends

Final values of the variables used in the benchmark:

Int_Glob:            5
        should be:   5
Bool_Glob:           1
        should be:   1
Ch_1_Glob:           A
        should be:   A
Ch_2_Glob:           B
        should be:   B
Arr_1_Glob[8]:       7
        should be:   7
```

```
Arr_2_Glob[8][7]:    50000010
        should be:   Number_Of_Runs + 10
Ptr_Glob->
  Ptr_Comp:          855702608
        should be:   (implementation-dependent)
  Discr:             0
        should be:   0
  Enum_Comp:         2
        should be:   2
  Int_Comp:          17
        should be:   17
  Str_Comp:          DHRYSTONE PROGRAM, SOME STRING
        should be:   DHRYSTONE PROGRAM, SOME STRING
Next_Ptr_Glob->
  Ptr_Comp:          855702608
        should be:   (implementation-dependent), same as above
  Discr:             0
        should be:   0
  Enum_Comp:         1
        should be:   1
  Int_Comp:          18
        should be:   18
  Str_Comp:          DHRYSTONE PROGRAM, SOME STRING
        should be:   DHRYSTONE PROGRAM, SOME STRING
Int_1_Loc:           5
        should be:   5
Int_2_Loc:           13
        should be:   13
Int_3_Loc:           7
        should be:   7
Enum_Loc:            1
        should be:   1
Str_1_Loc:           DHRYSTONE PROGRAM, 1'ST STRING
        should be:   DHRYSTONE PROGRAM, 1'ST STRING
Str_2_Loc:           DHRYSTONE PROGRAM, 2'ND STRING
        should be:   DHRYSTONE PROGRAM, 2'ND STRING

Register option selected?  YES
Microseconds for one run through Dhrystone:     0.1
Dhrystones per Second:                       8519121.2
VAX MIPS rating =   4848.675

[root@ls1043agw ~]$ echo 50000000|./dhry21

Dhrystone Benchmark, Version 2.1 (Language: C)

Please give the number of runs through the benchmark:
Execution starts, 50000000 runs through Dhrystone
Execution ends

Final values of the variables used in the benchmark:

Int_Glob:            5
        should be:   5
Bool_Glob:           1
        should be:   1
Ch_1_Glob:           A
        should be:   A
Ch_2_Glob:           B
        should be:   B
```

```
Arr_1_Glob[8]:       7
        should be:   7
Arr_2_Glob[8][7]:    50000010
        should be:   Number_Of_Runs + 10
Ptr_Glob->
  Ptr_Comp:          1046248528
        should be:   (implementation-dependent)
  Discr:             0
        should be:   0
  Enum_Comp:         2
        should be:   2
  Int_Comp:          17
        should be:   17
  Str_Comp:          DHRYSTONE PROGRAM, SOME STRING
        should be:   DHRYSTONE PROGRAM, SOME STRING
Next_Ptr_Glob->
  Ptr_Comp:          1046248528
        should be:   (implementation-dependent), same as above
  Discr:             0
        should be:   0
  Enum_Comp:         1
        should be:   1
  Int_Comp:          18
        should be:   18
  Str_Comp:          DHRYSTONE PROGRAM, SOME STRING
        should be:   DHRYSTONE PROGRAM, SOME STRING
Int_1_Loc:           5
        should be:   5
Int_2_Loc:           13
        should be:   13
Int_3_Loc:           7
        should be:   7
Enum_Loc:            1
        should be:   1
Str_1_Loc:           DHRYSTONE PROGRAM, 1'ST STRING
        should be:   DHRYSTONE PROGRAM, 1'ST STRING
Str_2_Loc:           DHRYSTONE PROGRAM, 2'ND STRING
        should be:   DHRYSTONE PROGRAM, 2'ND STRING

Register option selected?  YES
Microseconds for one run through Dhrystone:     0.1
Dhrystones per Second:                       8498703.9
VAX MIPS rating =   4837.054
```

13.3 EEMBC

13.3.1 Test Environment

Objectives

The EEMBC benchmaring guideline aims to do the following:

- Baseline the EEMBC performance on QorIQ Layerscape platforms.
- Identify any optimizations and ensure they are implemented on the QorIQ Layerscape platforms.
- Investigate other changes that may improve performance.

Hardware Platform Identification

Board	Silicon Revision	Default Freqeuncy(Core/CCB/DDR) in MHz	Core Type
LS1021ATWR	Rev2.0	1000/300/1600	cortex A7
LS1043ARDB	Rev1.1	1600/400/1600	cortex A53
LS1046ARDB	Rev1.0	1800/700/2100	cortex A72
LS1088ARDB	Rev1.0	1600/700/2100	cortex A53
LS2088ARDB	Rev1.0	2000/800/2133	cortex A72

For more information on each boards switch settings, refer to the boards's Reference Manual or Getting Started Guide on http://www.nxp.com/

Software Platforma Identification

All software was built from Layerscape SDK.

Boot Loader

U-boot 2020.04 with NXP-specific patches on top.

Endianness

For Arm architecture:

Define correct Endianness by either modifying `th_lite/<platform>/al/thcfg.h` to:

```
#if !defined( EE_BIG_ENDIAN ) && !defined( EE_LITTLE_ENDIAN)
#define EE_BIG_ENDIAN    (FALSE)
#define EE_LITTLE_ENDIAN (TRUE)
#endif
```

Or by modifying `/util/make/gcc.mak` to:

```
COMPILER_DEFINES += -DEE_BIG_ENDIAN=1 -DEE_LITTLE_ENDIAN=1
```

Data Types

`th_lite/<platform>/al/eembc_dt.h` has various data types definitions If not already done, do:

```
#define HAVE_64    (1)
```

The default definition for data types is:

```
typedef unsigned long          e_u24;
typedef signed   long       e_s24;

typedef unsigned long         e_u32;
typedef signed   long       e_s32;
```

However, as ppc follows I32LP64, in case of 64 bit execution long will be considered 64 bit. So the data type definitions should be changed to:

```
typedef unsigned int         e_u24;
typedef signed   int       e_s24;

typedef unsigned int        e_u32;
typedef signed   int       e_s32;
```

Build the benchmark with following compiler flags:

```
32bit Arm(LS1021A/LS1043A/LS1046A 32ibt):

TOOLS = /usr/bin
CC = $(TOOLS)/ arm-linux-gnueabihf-gcc
AS = $(TOOLS)/arm-linux-gnueabihf-as
LD = $(TOOLS)/ arm-linux-gnueabihf-gcc
AR = $(TOOLS)/ arm-linux-gnueabihf-ar
SIZE = $(TOOLS)/ arm-linux-gnueabihf-size

#Both TCPMark and IPMark, use following compiler flags:
COMPILER_FLAGS = -mcpu=cortex-a7 -mtune=cortex-a7 -O3 -funroll-all-loops -ftree-vectorize -flto -
fwhole-program -fgcse-las
LINKER_FLAGS   =  -lm -static --sysroot=/opt/fsl-qoriq/1.9/sysroots/ppce500v2-fsl-linux-gnuspe

64bit Arm(LS1043A/LS1046A/LS1088A/LS2088A):
TOOLS = /usr/bin

CC = $(TOOLS)/ aarch64-linux-gnu-gcc
AS = $(TOOLS)/ aarch64-linux-gnu-as
LD = $(TOOLS)/ aarch64-linux-gnu-gcc
AR = $(TOOLS)/ aarch64-linux-gnu-ar

COMPILER_FLAGS = -O3 -funroll-all-loops -ftree-vectorize
LINKER_FLAGS   =  -lm -static
SIZE = $(TOOLS)/ aarch64-linux-gnu-size
```

Generate EEMBC Binary for Target Board

1. Create a working directory.
2. Retrieve EEMBC v2.0 from http://www.eembc.org/
3. Extract the EEMBC v2.0 source code.
4. Edit `util/make/gcc.mak` so that the CC variable points to the correct location of your compiler. See the table above for detailed compiler flags and configuration.
5. Build binary using the make command:

   ```
   make VER=v2 TOOLCHAIN=gcc THLITE=_lite all-lite
   ```

6. After the build is complete, copy binary files under `<EEMBC_2.0_INSTALL_DIR>/networking/gcc/bin_lite` to target board.

13.3.2 Test Procedure

Running test and result collection

1. Deploy the target board with corresponding software mentioned in the previous section.

2. Put EEMBC Netmark binary compiled with optimized flags mentioned in section test environment on target board. EEMBC Netmark binary file list are as follows:

```
networking/tcpbulk_lite.exe
networking/tcpjumbo_lite.exe
networking/tcpmixed_lite.exe
networking/ip_pktcheckb1m_lite.exe
networking/ip_pktcheckb2m_lite.exe
networking/ip_pktcheckb4m_lite.exe
networking/ip_pktcheckb512k_lite.exe
networking/ip_reassembly_lite.exe
networking/ip_reassembly_lite.exe
networking/nat_lite.exe -INITTIME
networking/nat_lite.exe
networking/ospfv2_lite.exe
networking/qos_lite.exe
networking/routelookup_lite.exe
```

3. Run the benchmark:

```
networking/tcpbulk_lite.exe -i 200000
networking/tcpjumbo_lite.exe -i 300000
networking/tcpmixed_lite.exe -i 100000
networking/ip_pktcheckb1m_lite.exe -i 50000
networking/ip_pktcheckb2m_lite.exe -i 30000
networking/ip_pktcheckb4m_lite.exe -i 10000
networking/ip_pktcheckb512k_lite.exe -i 100000
networking/ip_reassembly_lite.exe -INITTIME -i 5000
networking/ip_reassembly_lite.exe -i 5000
networking/nat_lite.exe -INITTIME -i 10000
networking/nat_lite.exe -i 10000
networking/ospfv2_lite.exe -i 10000
networking/qos_lite.exe -i 300
networking/routelookup_lite.exe -i 20000
```

Check the log below for the results:

```
root@localhost# ./tcpbulk_lite -i 167000
 Configure benchmark for bulk data transfer test
Initialize network buffer pools
INFO: Initializing client and server NIF
>>-------------------------------------------------------------
>> EEMBC Component          : EEMBC Portable Test Harness V4.100
>> EEMBC Member Company     : EEMBC
>> Target Processor         : HOST EXAMPLE
>> Target Platform          : 32 Bit
>> Target Timer Available   : YES
>> Target Timer Intrusive   : YES
>> Target Timer Rate        : 1000000
>> Target Timer Granularity : 10
>> Recommended Iterations   : 167000
>> Bench Mark               : TCP-BM bulk V2.0R1
--  Non-Intrusive CRC =    0
--  Iterations        = 167000
--  Target Duration   = 1600000
--  Target Timer Rate = 1000000
--  v1                = -4280
--  v2                = 0
--  v3                = 0
```

```
--  v4                = 0
--  Iterations/Sec    =   104375.000
--  Total Run Time    =        1.600sec
--  Time / Iter       =        0.000009581sec
>> DONE!
>> BM: TCP-BM bulk V2.0R1
>> ID: NTW tcp

root@localhost# ./tcpjumbo_lite -i 250500
 Configure benchmark for jumbo packet transfer test
Initialize network buffer pools
INFO: Initializing client and server NIF
>>-------------------------------------------------------------
>> EEMBC Component          : EEMBC Portable Test Harness V4.100
>> EEMBC Member Company     : EEMBC
>> Target Processor         : HOST EXAMPLE
>> Target Platform          : 32 Bit
>> Target Timer Available   : YES
>> Target Timer Intrusive   : YES
>> Target Timer Rate        : 1000000
>> Target Timer Granularity : 10
>> Recommended Iterations   : 250500
>> Bench Mark               : TCP-BM jumbo V2.0R1
--  Non-Intrusive CRC =    0
--  Iterations        = 250500
--  Target Duration   = 1540000
--  Target Timer Rate = 1000000
--  v1                = -24000
--  v2                = 0
--  v3                = 0
--  v4                = 0
--  Iterations/Sec    =   162662.338
--  Total Run Time    =        1.540sec
--  Time / Iter       =        0.000006148sec
>> DONE!
>> BM: TCP-BM jumbo V2.0R1
>> ID: NTW tcp

root@localhost# ./tcpmixed_lite -i 83500
 Configure benchmark for mixed packet size test
Initialize network buffer pools
INFO: Initializing client and server NIF
>>-------------------------------------------------------------
>> EEMBC Component          : EEMBC Portable Test Harness V4.100
>> EEMBC Member Company     : EEMBC
>> Target Processor         : HOST EXAMPLE
>> Target Platform          : 32 Bit
>> Target Timer Available   : YES
>> Target Timer Intrusive   : YES
>> Target Timer Rate        : 1000000
>> Target Timer Granularity : 10
>> Recommended Iterations   : 83500
>> Bench Mark               : TCP-BM mixed V2.0R1
--  Non-Intrusive CRC =    0
--  Iterations        = 83500
--  Target Duration   = 1940000
--  Target Timer Rate = 1000000
--  v1                = -2736
--  v2                = 0
--  v3                = 0
```

```
--  v4                = 0
--  Iterations/Sec    =    43041.237
--  Total Run Time    =        1.940sec
--  Time / Iter       =        0.000023234sec
>> DONE!
>> BM: TCP-BM mixed V2.0R1
>> ID: NTW tcp


root@localhost# ./ip_pktcheckb1m_lite -i 41750
>> Datagram buffer size          : 0x0100000
>> Datagram alignment            :         4
>> Descriptor padd size          :         8
>> Number of Datagrams allocated :       720
>>-------------------------------------------------------------
>> EEMBC Component          : EEMBC Portable Test Harness V4.100
>> EEMBC Member Company     : EEMBC
>> Target Processor         : HOST EXAMPLE
>> Target Platform          : 32 Bit
>> Target Timer Available   : YES
>> Target Timer Intrusive   : YES
>> Target Timer Rate        : 1000000
>> Target Timer Granularity : 10
>> Recommended Iterations   : 41750
>> Bench Mark               : Networking: IP Packet Check Benchmark, 1.0M V2.0R1
--  Non-Intrusive CRC = e3b5
--  Iterations        = 41750
--  Target Duration   = 2260000
--  Target Timer Rate = 1000000
--  v1                = 30060000
--  v2                = 1670000
--  v3                = 0
--  v4                = 0
--  Iterations/Sec    =    18473.451
--  Total Run Time    =        2.260sec
--  Time / Iter       =        0.000054132sec
>> DONE!
>> BM: Networking: IP Packet Check Benchmark, 1.0M V2.0R1
>> ID: NTW ip_pktchec

root@localhost# ./ip_pktcheckb2m_lite -i 25050
>> Datagram buffer size          : 0x0200000
>> Datagram alignment            :         4
>> Descriptor padd size          :         8
>> Number of Datagrams allocated :      1412
>>-------------------------------------------------------------
>> EEMBC Component          : EEMBC Portable Test Harness V4.100
>> EEMBC Member Company     : EEMBC
>> Target Processor         : HOST EXAMPLE
>> Target Platform          : 32 Bit
>> Target Timer Available   : YES
>> Target Timer Intrusive   : YES
>> Target Timer Rate        : 1000000
>> Target Timer Granularity : 10
>> Recommended Iterations   : 25050
>> Bench Mark               : Networking: IP Packet Check Benchmark, 2.0M V2.0R1
--  Non-Intrusive CRC =  48b
--  Iterations        = 25050
--  Target Duration   = 2720000
--  Target Timer Rate = 1000000
```

```
--  v1               = 35370600
--  v2               = 1828650
--  v3               = 0
--  v4               = 0
--  Iterations/Sec   =     9209.559
--  Total Run Time   =        2.720sec
--  Time / Iter      =        0.000108583sec
>> DONE!
>> BM: Networking: IP Packet Check Benchmark, 2.0M V2.0R1
>> ID: NTW ip_pktchec


root@localhost# ./ip_pktcheckb4m_lite -i 8350
>> Datagram buffer size          : 0x0400000
>> Datagram alignment            :         4
>> Descriptor padd size          :         8
>> Number of Datagrams allocated :      2824
>>-------------------------------------------------------------
>> EEMBC Component          : EEMBC Portable Test Harness V4.100
>> EEMBC Member Company     : EEMBC
>> Target Processor         : HOST EXAMPLE
>> Target Platform          : 32 Bit
>> Target Timer Available   : YES
>> Target Timer Intrusive   : YES
>> Target Timer Rate        : 1000000
>> Target Timer Granularity : 10
>> Recommended Iterations   : 8350
>> Bench Mark               : Networking: IP Packet Check Benchmark, 4.0M V2.0R1
--  Non-Intrusive CRC = d86c
--  Iterations        = 8350
--  Target Duration   = 1800000
--  Target Timer Rate = 1000000
--  v1               = 23580400
--  v2               = 1244150
--  v3               = 0
--  v4               = 0
--  Iterations/Sec   =     4638.889
--  Total Run Time   =        1.800sec
--  Time / Iter      =        0.000215569sec
>> DONE!
>> BM: Networking: IP Packet Check Benchmark, 4.0M V2.0R1
>> ID: NTW ip_pktchec

root@localhost# ./ip_pktcheckb512k_lite -i 83500
>> Datagram buffer size          : 0x0080000
>> Datagram alignment            :         4
>> Descriptor padd size          :         8
>> Number of Datagrams allocated :       374
>>-------------------------------------------------------------
>> EEMBC Component          : EEMBC Portable Test Harness V4.100
>> EEMBC Member Company     : EEMBC
>> Target Processor         : HOST EXAMPLE
>> Target Platform          : 32 Bit
>> Target Timer Available   : YES
>> Target Timer Intrusive   : YES
>> Target Timer Rate        : 1000000
>> Target Timer Granularity : 10
>> Recommended Iterations   : 83500
>> Bench Mark               : Networking: IP Packet Check Benchmark, 0.5M V2.0R1
--  Non-Intrusive CRC = 3e1d
```

```
--  Iterations        = 83500
--  Target Duration   = 2160000
--  Target Timer Rate = 1000000
--  v1                = 31229000
--  v2                = 1753500
--  v3                = 0
--  v4                = 0
--  Iterations/Sec    =    38657.407
--  Total Run Time    =        2.160sec
--  Time / Iter       =        0.000025868sec
>> DONE!
>> BM: Networking: IP Packet Check Benchmark, 0.5M V2.0R1
>> ID: NTW ip_pktchec


root@localhost# ./ip_reassembly_lite -INITTIME -i 4175
*** Initialization Timing Run, Subtract from normal run for score ***
>>-------------------------------------------------------------
>> EEMBC Component          : EEMBC Portable Test Harness V4.100
>> EEMBC Member Company     : EEMBC
>> Target Processor         : HOST EXAMPLE
>> Target Platform          : 32 Bit
>> Target Timer Available   : YES
>> Target Timer Intrusive   : YES
>> Target Timer Rate        : 1000000
>> Target Timer Granularity : 10
>> Recommended Iterations   : 4175
>> Bench Mark               : INITIALIZATION Networking: IP Reassembly Benchmark V2.0R1
--  Non-Intrusive CRC =    0
--  Iterations        = 4175
--  Target Duration   = 640000
--  Target Timer Rate = 1000000
--  v1                = 200
--  v2                = 0
--  v3                = 0
--  v4                = 0
--  Iterations/Sec    =     6523.438
--  Total Run Time    =        0.640sec
--  Time / Iter       =        0.000153293sec
>> DONE!
>> BM: INITIALIZATION Networking: IP Reassembly Benchmark V2.0R1
>> ID: NTW ip_reasmIT

root@localhost# ./ip_reassembly_lite -i 4175
>>-------------------------------------------------------------
>> EEMBC Component          : EEMBC Portable Test Harness V4.100
>> EEMBC Member Company     : EEMBC
>> Target Processor         : HOST EXAMPLE
>> Target Platform          : 32 Bit
>> Target Timer Available   : YES
>> Target Timer Intrusive   : YES
>> Target Timer Rate        : 1000000
>> Target Timer Granularity : 10
>> Recommended Iterations   : 4175
>> Bench Mark               : Networking: IP Reassembly Benchmark V2.0R1
--  Non-Intrusive CRC = 678e
--  Iterations        = 4175
--  Target Duration   = 1940000
--  Target Timer Rate = 1000000
--  v1                = 200
```

```
--  v2                = 4939025
--  v3                = 835000
--  v4                = 0
--  Iterations/Sec    =     2152.062
--  Total Run Time    =        1.940sec
--  Time / Iter       =        0.000464671sec
>> DONE!
>> BM: Networking: IP Reassembly Benchmark V2.0R1
>> ID: NTW ip_reasm


root@localhost# ./nat_lite -INITTIME -i 8350
*** Initialization Timing Run, Subtract from normal run for score ***
>>-------------------------------------------------------------
>> EEMBC Component          : EEMBC Portable Test Harness V4.100
>> EEMBC Member Company     : EEMBC
>> Target Processor         : HOST EXAMPLE
>> Target Platform          : 32 Bit
>> Target Timer Available   : YES
>> Target Timer Intrusive   : YES
>> Target Timer Rate        : 1000000
>> Target Timer Granularity : 10
>> Recommended Iterations   : 8350
>> Bench Mark               : INITIALIZATION Network Address Translation V2.0R1
--  Non-Intrusive CRC =    0
--  Iterations        = 8350
--  Target Duration   = 960000
--  Target Timer Rate = 1000000
--  v1                = 1000
--  v2                = 0
--  v3                = 0
--  v4                = 0
--  Iterations/Sec    =     8697.917
--  Total Run Time    =        0.960sec
--  Time / Iter       =        0.000114970sec
>> DONE!
>> BM: INITIALIZATION Network Address Translation V2.0R1
>> ID: NTW NATIT

root@localhost# ./nat_lite -i 8350
>>-------------------------------------------------------------
>> EEMBC Component          : EEMBC Portable Test Harness V4.100
>> EEMBC Member Company     : EEMBC
>> Target Processor         : HOST EXAMPLE
>> Target Platform          : 32 Bit
>> Target Timer Available   : YES
>> Target Timer Intrusive   : YES
>> Target Timer Rate        : 1000000
>> Target Timer Granularity : 10
>> Recommended Iterations   : 8350
>> Bench Mark               : Network Address Translation V2.0R1
--  Non-Intrusive CRC = 9d46
--  Iterations        = 8350
--  Target Duration   = 2320000
--  Target Timer Rate = 1000000
--  v1                = 1000
--  v2                = 0
--  v3                = 0
--  v4                = 0
--  Iterations/Sec    =     3599.138
```

```
--  Total Run Time    =        2.320sec
--  Time / Iter       =        0.000277844sec
>> DONE!
>> BM: Network Address Translation V2.0R1
>> ID: NTW NAT


root@localhost# ./ospfv2_lite -i 8350
>>--------------------------------------------------------------
>> EEMBC Component          : EEMBC Portable Test Harness V4.100
>> EEMBC Member Company     : EEMBC
>> Target Processor         : HOST EXAMPLE
>> Target Platform          : 32 Bit
>> Target Timer Available   : YES
>> Target Timer Intrusive   : YES
>> Target Timer Rate        : 1000000
>> Target Timer Granularity : 10
>> Recommended Iterations   : 8350
>> Bench Mark               : Networking: OSPF Benchmark V2.0R1
--  Non-Intrusive CRC = 7f12
--  Iterations        = 8350
--  Target Duration   = 1480000
--  Target Timer Rate = 1000000
--  v1                = 400
--  v2                = 4
--  v3                = 8
--  v4                = 32000
--  Iterations/Sec    =     5641.892
--  Total Run Time    =        1.480sec
--  Time / Iter       =        0.000177246sec
>> DONE!
>> BM: Networking: OSPF Benchmark V2.0R1
>> ID: NTW ospf


root@localhost# ./qos_lite -i 250
>>--------------------------------------------------------------
>> EEMBC Component          : EEMBC Portable Test Harness V4.100
>> EEMBC Member Company     : EEMBC
>> Target Processor         : HOST EXAMPLE
>> Target Platform          : 32 Bit
>> Target Timer Available   : YES
>> Target Timer Intrusive   : YES
>> Target Timer Rate        : 1000000
>> Target Timer Granularity : 10
>> Recommended Iterations   : 250
>> Bench Mark               : Networking: QoS V2.0R1
--  Non-Intrusive CRC = fa81
--  Iterations        = 250
--  Target Duration   = 1000000
--  Target Timer Rate = 1000000
--  v1                = 100
--  v2                = 100
--  v3                = 0
--  v4                = 0
--  Iterations/Sec    =      250.000
--  Total Run Time    =        1.000sec
--  Time / Iter       =        0.004000000sec
>> DONE!
>> BM: Networking: QoS V2.0R1
```

```
>> ID: NTW QoS


root@localhost# ./routelookup_lite -i 16700
>> self-check completed ok.
>>-------------------------------------------------------------
>> EEMBC Component          : EEMBC Portable Test Harness V4.100
>> EEMBC Member Company     : EEMBC
>> Target Processor         : HOST EXAMPLE
>> Target Platform          : 32 Bit
>> Target Timer Available   : YES
>> Target Timer Intrusive   : YES
>> Target Timer Rate        : 1000000
>> Target Timer Granularity : 10
>> Recommended Iterations   : 16700
>> Bench Mark               : Networking: Route Lookup Benchmark V2.0R1
--  Non-Intrusive CRC = 407d
--  Iterations        = 16700
--  Target Duration   = 2100000
--  Target Timer Rate = 1000000
--  v1                = 0
--  v2                = 0
--  v3                = 0
--  v4                = 0
--  Iterations/Sec    =     7952.381
--  Total Run Time    =        2.100sec
--  Time / Iter       =        0.000125749sec
>> DONE!
>> BM: Networking: Route Lookup Benchmark V2.0R1
>> ID: NTW routelookup EEMBC
```

NOTE

For other platforms, use the ratio (CPU_Freq_target_platform/2000) to get the corresponding parameter.

There is a run to run variation, so an average across 5 runs was taken for every result.

Networking Version 2.0 Calculation

Networking Version 2.0 produces two aggregate "mark" scores: the TCPmark™ and the IPmark™. The IPmark is intended for developers of infrastructure equipment, while the TCPmark, which includes the TCP benchmark, focuses on client- and server-based network hardware.

The IPmark is the geometric mean of the scores for QoS, Route Lookup, OSPF, IP Reassembly, Network Address Translation, and the geometric mean of the individual scores for IP Packet check, all divided by 10:

```
IPmark = Geomean ((Geomean (IP Packet Check [0.5MB], IP Packet Check [1MB], IP Packet Check [2MB], IP
Packet Check [4MB]), QoS, Route Lookup, OSPF, IP Reassembly, NAT))/10
```

The TCPmark is the geometric mean of the scores for TCP Jumbo, TCP Bulk, and TCP Mixed divided by 100:

```
TCPmark = Geomean (TCP jumbo, TCP bulk, TCP Mixed)/100
```

To calculate a geometric mean, multiply all the results of the tests together and take the nth root of the product, where n equals the number of tests.

NAT and IP Reassembly Benchmarks

To calculate the iterations per second for the NAT and IP Reassembly benchmarks, it's necessary to run the benchmarks twice:

1. Run the benchmark with the flag -INITTIME supplied on the command line.

2. Run the benchmark without the flag -INITTIME supplied on the command line. The same executable must be run both times and the number of iterations must be identical.
3. Subtract the time of the first run from the time of the second run and calculate the iterations per second based on the calculated time.

The score reported for each device is a single-number figure of merit calculated by taking the geometric mean of the individual Networking scores and dividing by 395.184. This normalization factor is derived from the lowest score in this category on December 5, 2000. Scores for each of the individual benchmarks within this suite allow designers to weight and aggregate the benchmarks to suit specific application requirements.

To calculate a geometric mean, multiply all the results (*) of the tests together and take the nth root of the product, where n equals the number of tests. (*) Scores included in geometric mean:

```
•OSPF
•Route Lookup
•Packet Flow - 512 kbytes
•Packet Flow - 1 Mbyte
•Packet Flow - 2 Mbytes
```

NOTE

This calculation can also be found on EEMBC website: http://eembc.org/benchmark/reports/mark.php?suite=NT2

13.4 LMBench

13.4.1 Test Environment

Objectives

The LMBench benchmaring guideline aims to do the following:

- Baseline the LMBench performance on QorIQ Layerscape platforms.
- Identify any optimizations and ensure they are implemented on the QorIQ Layerscape platforms.
- Investigate other changes that may improve performance.

Hardware Platform Identification

Board	Silicon Revision	Default Freqeuncy(Core/CCB/DDR) in MHz	Core Type
LS1021ATWR	Rev2.0	1000/300/1600	cortex A7
LS1043ARDB	Rev1.1	1600/400/1600	cortex A53
LS1046ARDB	Rev1.0	1800/700/2100	cortex A72
LS1088ARDB	Rev1.0	1600/700/2100	cortex A53
LS2088ARDB	Rev1.0	2000/800/2133	cortex A72

For more information on each board's switch settings, refer to the boards's Reference Manual or Getting Started Guide on http://www.nxp.com/

Software Platforma Identification

All software was built from Layerscape SDK.

Boot Loader

U-boot 2020.04 with NXP-specific patches on top.

If the target platform support chip select interleaving and address hash, please enable chip select interleaving and address hash, disabling ecc by hwconfig with syntax:

```
“hwconfig=fsl_ddr:bank_intlv=cs0_cs1,addr_hash=true,ecc=off”
```

LMBench Application

The rootfs includes LMBench binaries which were built without optimization. For general latency performance, the default LMBench binary file in the root file system will be OK. To get better bandwidth performance result, modify the compiler flags to enable "O3" optimization.

1. Download lmbench source code from following link: https://sourceforge.net/projects/lmbench/files/latest/download
2. Change “CC” and “CFLAGS” in file `src/Makefile` as the following:

   ```
   CC = /usr/bin/aarch64-linux-gnu-gcc
   CFLAGS = -O3
   ```

3. Build code with new optimized compiler flags:

   ```
   #make
   ```

4. Transfer the `bw_mem` binary file to target board.

13.4.2 Test Procedure

Running Test and Result Collection

Separate U-Boot image was flashed in alternate U-Boot flash bank and the DUT is booted out of that bank. Binaries compiled with different flags were run separately and then the data was collected for the binary showing the best results. To get full LMBench test result, run `lmbench-run` to get the full test result.

There is a run to run variation in, so an average across 5 runs was taken for every result

Scripts for LMBench Test

Execution latency test script:

```
for i in `seq 1 5`
do
echo “Integer, integer64,float,double float execution latency”
lat_ops
done
```

Memory read latency test script:

```
for i in `seq 1 5`
do
echo “L1, L2, L3 and DDR read latency”
lat_mem_rd 100M
done
```

Memory bandwidth test script:

```
#!/bin/sh
```

```
for opt in rd wr rdwr cp frd fwr fcp bzero bcopy
do
   echo "L1 cache bandwidth $opt test with #$proc process"
   #8k is fit for all platform

   for idx in `seq 1 5`
   do
       bw_mem -P 1 8k $opt
   done
   echo "L2 cache bandwidth $opt test"
   # For Layerscape platform, each platform has more than 256K L2 cache, so chose 128k as L2
cache size.
   for idx in `seq 1 5`
   do
       bw_mem -P 1 128k $opt
   done

   echo "Main mem bandwidth $opt test"
   for idx in `seq 1 5`
   do
       bw_mem -P 1 100m $opt
   done
done
```

Chapter 14
Connect to cloud: EdgeScale

14.1 What is EdgeScale

EdgeScale is a unified, scalable, and secure device management solution for Edge Computing applications. It enables OEMs and developers to leverage cloud compute frameworks like AWS Greengrass, Azure IoT, and Aliyun on Layerscape devices.

EdgeScale provides the missing piece of device security and management needed for customers to securely deploy and manage many Edge computing devices from the cloud. End-users and developers can use the EdgeScale cloud dashboard to securely enroll Edge devices, monitor their health, attest, and deploy container applications and firmware updates.

EdgeScale can also be used as a development environment to build containers and generate firmware.

Supported features

- EdgeScale dashboard for users
- Secure device enrolment
- Secure key/certificate provisioning
- OTA: firmware update (LS1012A, LS1043 or LS1046)
- Device status monitoring on the cloud
- Dynamic deployment of container-based applications

The above specified features are currently supported in LSDK. For more details, please visit: EDGESCALE: EdgeScale for Secure Edge Computing

14.2 Building EdgeScale client

To build EdigeScale client with Flexbuild, follow the steps below:

```
$ cd flexbuild
$ source setup.env
$ modify the default CONFIG_APP_EDGESCALE=n to y in configs/build_lsdk.cfg

If necessary, you can specify secure key pair in configs/build_lsdk.cfg to override the default one
as below:
SECURE_PRI_KEY=/path/to/srk.pri
SECURE_PUB_KEY=/path/to/srk.pub

To only build Edgescale client components:
$ flex-builder -c edgescale -a <arch>

To generate all deployable images with Edgescale enabled:
$ flex-builder clean
$ flex-builder -m <machine>               (for specified machine)
or
$ flex-builder -i autobuild -a <arch>     (for all <arch> machines)

To Install images into SD card:
$ flex-installer -b build/images/bootpartition_LS_<arch>_lts_<version>  -r build/rfs/
rootfs_lsdk_20.04_<arch>  -d /dev/sdx  (or /dev/mmcblk0)
or
$ flex-installer -b build/images/bootpartition_LS_<arch>_lts_<version>  -r build/rfs/
rootfs_lsdk_20.04_<arch>  -f firmware_<machine>_uboot_sdboot.img  -d /dev/sdx
or
```

```
$ flex-installer -b bootpartition_LS_<arch>_lts_<version>.tgz -r rootfs_lsdk_20.04_<arch>.tgz -
d /dev/sdx
```

14.3 Procedure to start EdgeScale

For complete details on how to start EdgeScale, see https://doc.edgescale.org/

Chapter 15
eIQ Machine Learning Software

NXP eIQ™ machine learning software development environment provides a shell script way to install machine learning applications targeted at NXP QorIQ Layerscape processors. The NXP eIQ software is concerned only with neural networks inference and standard machine-learning algorithms, leaving neural network training to other specialized software tools and dedicated hardware.

The NXP eIQ software delivers machine learning enablement by providing ML support in LSDK for the two QorIQ Layerscape processors LS1046A and LX2160A. The main features of NXP eIQ software are:

- OpenCV 4.0.1
- Arm Compute Library 19.02
- Arm NN 19.02
- TensorFlow 1.12
- TensorFlow Lite 2.0.0
- Onnxruntime 0.4.0

15.1 Building eIQ software

eIQ components can be cross-built on x86 Linux host machine for target arm64 with flex-builder.

There is a lot of dependencies on host machine to cross build eIQ components. To avoid possible build issues in uncertain environment, build eIQ in docker container generated by Flexbuild.

1. Download LSDK flexbuild tarball from www.nxp.com/lsdk
2. Generate fbubuntu docker container

```
$ tar xvzf flexbuild_<version>.tgz
$ cd flexbuild_<version>
$ source setup.env
$ flex-builder docker
[root@fbubuntu flexbuild]$ source setup.env
[root@fbubuntu flexbuild]$ flex-builder -h
```

Cross-build eIQ components on host

```
Usage: flex-builder -c <component> [ -a <arch> ]
$ flex-builder -c eiq          # build all eIQ components (include armnn, armcl, tensorflow, tflite,
opencv, onnx, etc)
$ flex-builder -c armnn        # build armnn
$ flex-builder -c tensorflow   # build tensorflow
$ flex-builder -c tflite       # build tflite
$ flex-builder -c opencv       # build opencv
$ flex-builder -c caffe        # build caffe
$ flex-builder -c onnx         # build onnx
$ flex-builder -c onnxruntime  # build onnxruntime
```

To build full LSDK with eIQ components for target arm64 on x86 host machine

```
$ flex-builder -i clean-eiq              # optionally, clean obsolete eIQ images
$ flex-builder -i mkrfs                  # generate LSDK arm64 rootfs
$ flex-builder -c eiq                    # build eIQ components
$ flex-builder -i mkbootpartition        # generate boot partition tarball including kernel
```

```
$ flex-builder -i merge-component -B eiq  # merge eIQ components into target arm64 ubuntu rootfs
$ flex-builder -i install-eiq             # install python .whl files into target arm64 rootfs on
host machine
$ flex-builder -i packrfs                 # pack target rootfs to
generate rootfs_<sdk_version>_ubuntu_main_arm64.tgz
```

Deploy eIQ components to target board

To deploy full LSDK distro with eIQ images to target storage device on host machine for the first time:

```
$ flex-installer -r rootfs_lsdk2004_ubuntu_main_arm64.tgz -b bootpartition_LS_arm64_lts_5.4.tgz -
d /dev/sdx
```

To deploy the separate increment of specific eIQ component to the running LSDK distro on target board

Step 1. Generate the increment components_LS_arm64_ubuntu_eIQ.tgz

```
$ flex-builder -i clean-apps -B eiq    # clean obsolete eIQ images
$ flex-builder -c <eiq_component>   # build specific eIQ component
$ flex-builder -i packapps -B eiq     # generate components_LS_arm64_ubuntu_eIQ.tgz
```

Step 2. Connect remote running target arm64 rootfs to local host and add increment eIQ component to target board:

```
$ flex-builder connect <target_IP>    # connect remote rootfs of target board to local directory of
host machine
$ flex-builder push eiq <target_IP>   # push local eIQ images to remote rootfs of target board
$ flex-builder disconnect <target_IP> # disconnect the connection between target board and
host machine
```

How to add new eIQ component to LSDK

- Set CONFIG_EIQ_<component>=y, <component>_repo_url and <component>_repo_tag in configs/build_lsdk_xx.cfg

- Add make target in packages/apps/eiq/eiq.mk and build the new component by command flex-builder -c <component>

Optionally, you can modify the default repository tag/branch in configs/build_lsdk_xx.cfg on demand e.g. modify variable tensorflow_repo_tag, opencv_repo_branch, etc.

15.2 Deploying eIQ software

For more details on how to start eIQ software examples, see NXP eIQ Machine Learning Software Development Environment for QorIQ Layerscape Applications Processors Application Note.

How To Reach Us

Home Page:

nxp.com

Web Support:

nxp.com/support

Information in this document is provided solely to enable system and software implementers to use NXP products. There are no express or implied copyright licenses granted hereunder to design or fabricate any integrated circuits based on the information in this document. NXP reserves the right to make changes without further notice to any products herein.

NXP makes no warranty, representation, or guarantee regarding the suitability of its products for any particular purpose, nor does NXP assume any liability arising out of the application or use of any product or circuit, and specifically disclaims any and all liability, including without limitation consequential or incidental damages. “Typical” parameters that may be provided in NXP data sheets and/or specifications can and do vary in different applications, and actual performance may vary over time. All operating parameters, including “typicals,” must be validated for each customer application by customer's technical experts. NXP does not convey any license under its patent rights nor the rights of others. NXP sells products pursuant to standard terms and conditions of sale, which can be found at the following address: nxp.com/SalesTermsandConditions.

Security — Customer understands that all NXP products may be subject to unidentified or documented vulnerabilities. Customer is responsible for the design and operation of its applications and products throughout their lifecycles to reduce the effect of these vulnerabilities on customer’s applications and products. Customer’s responsibility also extends to other open and/or proprietary technologies supported by NXP products for use in customer’s applications. NXP accepts no liability for any vulnerability. Customer should regularly check security updates from NXP and follow up appropriately. Customer shall select products with security features that best meet rules, regulations, and standards of the intended application and make the ultimate design decisions regarding its products and is solely responsible for compliance with all legal, regulatory, and security related requirements concerning its products, regardless of any information or support that may be provided by NXP. NXP has a Product Security Incident Response Team (PSIRT) (reachable at PSIRT@nxp.com) that manages the investigation, reporting, and solution release to security vulnerabilities of NXP products.

NXP, the NXP logo, NXP SECURE CONNECTIONS FOR A SMARTER WORLD, Freescale, the Freescale logo, eIQ, CodeWarrior, Layerscape, PowerQUICC, QorIQ, CoreNet, and QUICC Engine are trademarks of NXP B.V. All other product or service names are the property of their respective owners. TensorFlow, the TensorFlow logo and any related marks are trademarks of Google Inc. AMBA, Arm, Arm7, Arm7TDMI, Arm9, Arm11, Artisan, big.LITTLE, Cordio, CoreLink, CoreSight, Cortex, DesignStart, DynamIQ, Jazelle, Keil, Mali, Mbed, Mbed Enabled, NEON, POP, RealView, SecurCore, Socrates, Thumb, TrustZone, ULINK, ULINK2, ULINK-ME, ULINK-PLUS, ULINKpro, µVision, and Versatile are trademarks or registered trademarks of Arm Limited (or its subsidiaries) in the US and/or elsewhere. The related technology may be protected by any or all of patents, copyrights, designs and trade secrets. All rights reserved.

© NXP B.V. 2021. **All rights reserved.**

For more information, please visit: http://www.nxp.com

For sales office addresses, please send an email to: salesaddresses@nxp.com

Date of release: 01/2021

Document identifier: LSDKUG

arm